NTE®

$2.95

SEMICONDUCTORS

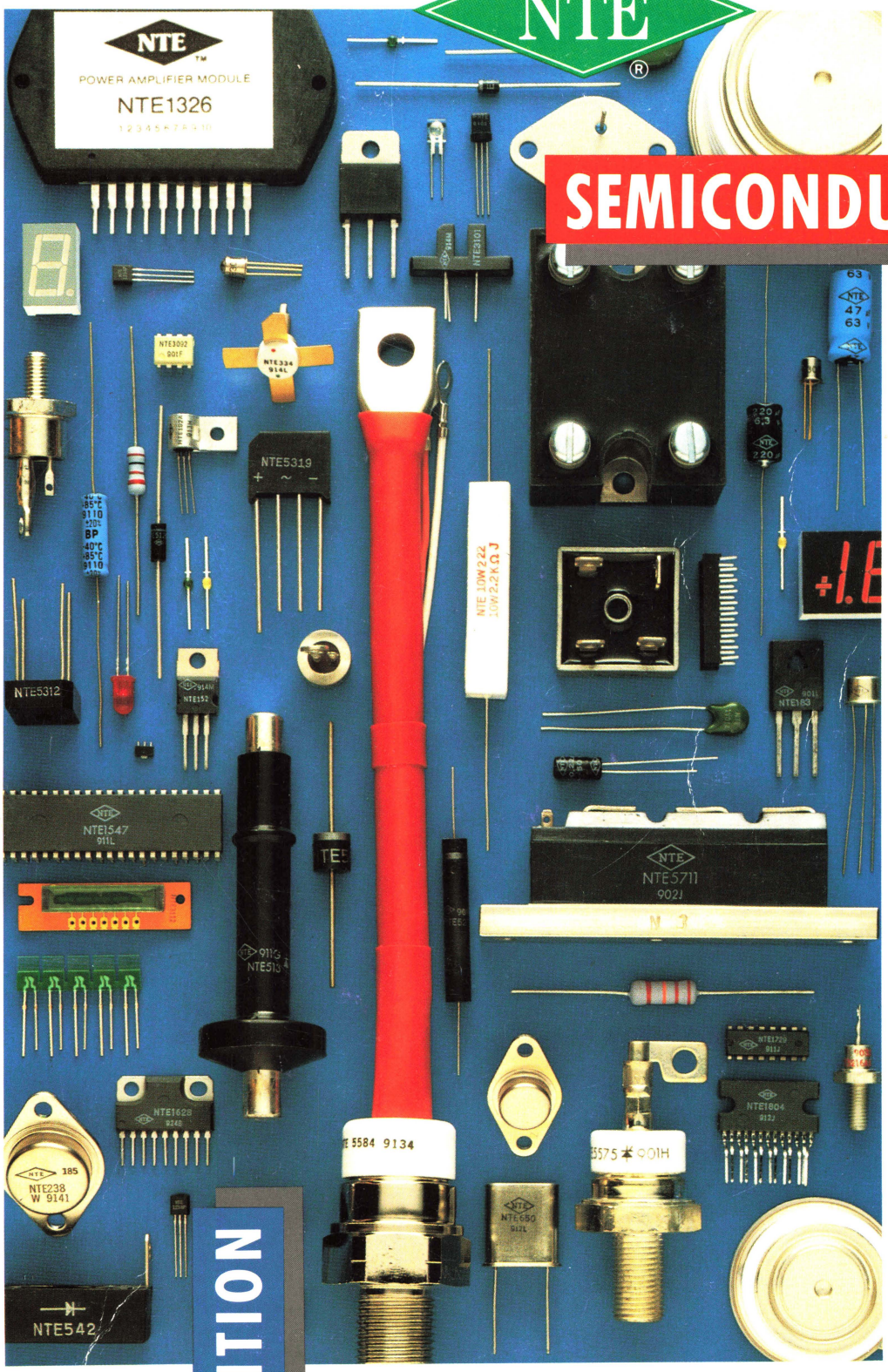

3,500 NTE Semiconductors Cross-Referenced to over 250,000 U.S., Japanese and European Part Numbers. Includes Technical Information!

6TH EDITION

Semiconductors, Capacitors, and Flameproof Resistors:

- Industrial
- Consumer
- Commercial
- And MRO Applications

SUGGESTED PRICE $4.95

The NTE line of replacement semiconductors is both vast and comprehensive. It covers everything from A/D Converters to Zener Diodes and all are backed by our exclusive 2 year warranty. Now containing over 3,500 types, the NTE line is able to replace over 250,000 industry part numbers including JEDEC, JAPANESE, EUROPEAN and many commercial and industrial house number types.

Types included are:

BIPOLAR TRANSISTORS

Silicon & Germanium
Collector Currents to 60 Amps
Breakdown Voltages to 2500 Volts
Darlington & Non-Darlington
Frequencies up to 5 GHZ

FIELD EFFECT TRANSISTORS

N-Channel & P-Channel
JFET & MOSFET
Single & Dual Gate
Power MOSFET

ZENER DIODES

Wattages from 1/2 Watt to 50 Watts
Voltage Range: 2.4 V to 200 V all ±5%

DIODES & RECTIFIERS

Silicon, Germanium and Selenium
Average Forward Current to 30 Amps
Peak Reverse Voltages to 6000 Volts
Standard and Fast Recovery
Dual Rectifiers
Schottky Barrier Rectifiers

BRIDGE RECTIFIERS

1 Amp to 100 Amps
100 Volts to 1000 Volts

INDUSTRIAL RECTIFIERS

3 Amps to 2200 Amps
50 Volts to 1600 Volts

SILICON CONTROLLED RECTIFIERS (SCR'S)

$I_{T(RMS)}$: 0.8 Amp to 1800 Amps
V_{DRM}: 25 Volts to 1200 Volts
Phase Control & High Speed types

TRIACS

$I_{T(RMS)}$: 0.8 Amps to 45 Amps
V_{RRM}: 25 Volts to 1000 Volts

METAL OXIDE VARISTORS (MOV'S)

RMS Voltage: 10 Volts to 480 Volts
Peak Current: 250 Amps to 6500 Amps

OPTOELECTRONICS

Discrete LED Indicators
Optoisolators, Transistors, Darlingtons, SCRs, Triacs, Logic Gate Outputs
Opto Interrupters
LED Displays
Bar Graph Displays
LED Arrays
Infrared Emitting Diodes
Phototransistors

INTEGRATED CIRCUITS

Voltage Regulators: Positive, Negative and Adjustable
Audio Power Amps
Comparators
OP-Amps
TV and VCR Circuits
Oscillators
Preamps
CMOS (4000 & 4500 Series)
TTL (74, 74C, 74H, 74LS, 74S)
Display Drivers
Microprocessors
Memory Circuits

EXCLUSIVE 2 YEAR WARRANTY

NTE products are warranteed to be free from defects in materials & workmanship and meet applicable specifications when tested to ratings. This warranty is in lieu of any other warranty expressed, implied or statutory. NTE's liability under this warranty is limited to repairing, replacing or issuing credit (at the discretion of NTE) for such products as become defective or fail to meet specification during the warranty period of two years from date of sale. The technical data shown is intended to provide safe areas of operation for the NTE products. Determination as to whether a product is actually defective rests with NTE. In no event will NTE be liable for consequential or special damages.

SAFETY WARNING:
NTE devices are not to be used as critical components in life support equipment. Testing of solid state devices should be performed by experienced persons using test instruments designed for such purposes. Typical test instruments would include VOM's, transistor testers and curve tracers. Line voltage should not be applied directly to a device under test.

Information and specifications furnished by NTE are believed to be accurate and reliable. However, NTE neither implies nor guarantees that items listed in replacement directories are exact replacements in all applications. NTE assumes no responsibility for its use, nor for any infringements of patents or other rights of third parties which may result from such use. No license is granted by implication or otherwise under any patent rights of NTE or others. Reproduction without express permission of editorial or pictorial content in any manner, is prohibited.

© Copyright June 1992 by NTE Electronics, Inc. NTE-CRM6

TABLE OF CONTENTS

Numerical Index	III thru LI
Replacement Considerations/ Mounting Techniques	1–1 thru 1–5
Transistors	1–7 thru 1–49
Diodes/Rectifiers	1–50 thru 1–56
High Voltage Devices	1–57 thru 1–64
Industrial Rectifiers/Bridges	1–65 thru 1–71
SCR's/TRIAC's	1–72 thru 1–84
Powerblock/Hybrid Modules	1–85 thru 1–86
Special Devices	1–87 thru 1–92
Transient Suppressors	1–93 thru 1–96
IC Protectors/Thermal Cutoffs	1–97 thru 1–98
Optoelectronic Devices	1–101 thru 1–117
Voltage Regulators	1–118 thru 1–122
Linear Integrated Circuits	1–123 thru 1–269
Digital Integrated Circuits	1–270 thru 1–313
Microprocessors/Memories	1–314 thru 1–319
Resistors	1–324 thru 1–332
Capacitors	1–333 thru 1–350
Accessories/Hardware	1–351 thru 1–356
CROSS REFERENCE	2–2 thru 2–307

The information in this book has been carefully checked and is believed to be accurate; however, no responsibility is assumed for inaccuracies. NTE reserves the right to make changes without further notice to any products herein. NTE makes no warranty, representation or guarantee regarding the suitability or replaceability of its products for any particular purpose, nor does NTE assume any liability arising out of the application or use of any product, and specifically disclaims any and all liability, including without limitation consequential or incidental damages. "TYPICAL" parameters can and do vary in different applications. All operating parameters, including "TYPICALS" must be validated for each application by customer's technical experts.

NTE PRODUCT NUMERICAL INDEX

(ALPHABETICAL)

Page No.

A to D Converters 1–306
Accessories & Hardware 1–351
Bar Graph Displays 1–111
Bi–Directional Diode Thyristor (SIDAC) . 1–88
Bi–Polar Transistors 1–7
Bi–Polar Transistor Selector Guide 1–29
Bridge Rectifiers 1–65
Capacitors 1–333
CMOS IC's 1–270
Color Oscillator Crystals 1–99
Complementary Transistors 1–28
CROSS REFERENCE SECTION 2–1
Crystals 1–99
Darlington Arrays (IC's) 1–305
Darlington Audio Amplifiers 1–123
Darlington Transistors 1–26
DIAC's 1–89
Digital Integrated Circuits:
- CMOS 1–270
- DTL 1–310
- HTL 1–312
- TTL 1–281

Diodes:
- General Purpose 1–50
- Infrared Emitting 1–105
- LEDs 1–102/1–104
- Light Emitting 1–102/1–104
- PIN 1–90
- Surge Clamping 1–95
- Temperature Compensating 1–94
- Varactors 1–90
- Varistors, Temp. Comp 1–94
- Varistors, Voltage Comp 1–94
- Zener 1–53

Displays:
- Bar Graph 1–111
- Level Meter 1–104
- Multiple LED 1–104
- Numeric 1–108

Display Driver IC's 1–305
DTL IC's (Diode Transistor Logic) 1–310
Dual Rectifier 1–52
Electrolytic Capacitors 1–333
Electronic Tuner Diodes 1–90
EPROMS (Erasable Programmable Read Only Memories) 1–315
Fast Recovery Rectifiers 1–52
FET (Field Effect Transistors):
- JFETS (N & P Channel) 1–41
- MOSFETS (N & P Channel) 1–41
- MOSFETS (Power) 1–40

Flameproof Resistors 1–324
Gate Turn–Off SCR's 1–77
General Purpose Diodes/Rectifiers 1–50
Germanium Diodes 1–50
Germanium Transistors 1–39
Hardware & Accessories 1–351
Heat Sinks 1–351
High Speed SCR's 1–76

Page No.

High Voltage Splice for CRT's 1–352
High Voltage Focus Dividers 1–57
High Voltage Multipliers 1–57
High Voltage Rectifiers 1–63
Hockey Puck:
- Rectifiers 1–67
- SCR's 1–75

Hybrid Modules 1–86
HTL IC's (High Threshold Logic) 1–312
Industrial Rectifiers 1–66
Infrared Emitting Diodes 1–105
Insulator Kits 1–351
Integrated Circuits:
- Digital 1–270
- Linear 1–123
- Memories 1–314
- Microprocessor 1–314
- Miscellaneous 1–251
- TTL 1–281

Integrated Circuit Protectors (ICP's) 1–97
Integrated Thyristor/Rectifier (ITR's) 1–78
JFETS 1–41
Lamps:
- Infrared 1–105
- Light Emitting 1–102

LED Displays 1–108
LED Indicators 1–102
Level Meter Displays 1–104
Linear Integrated Circuits 1–123
Linear Integrated Circuit Modules 1–123
Memory Circuits 1–314
Metal Oxide Varistors (MOV) 1–93/1–94
Microprocessor & Peripheral Circuits .. 1–314
Microwave Mixer Diodes 1–90
Microwave Oven Rectifiers 1–63
MOSFETS 1–40
Mounting Techniques 1–3
Multipliers, High Voltage 1–57
Numerical Index III
Opto–Coupled Isolators 1–106
Opto–Couplers 1–106
Opto–Interrupters 1–105
Opto–Isolators 1–106
Phase Control SCR's 1–73
Photo Interrupters 1–105
PIN Diodes 1–90
Programmable Unijunction Transistor (PUT) 1–87
Powerblock Thyristor Modules 1–85
Quadruplers, High Voltage Multipliers 1–57
Quartz Crystals:
- by Part No. 1–99
- by Frequency 1–100

RAMS (Random Access Memory) 1–314

Page No.

Rectifiers:
- Bridge 1–65
- Dual, Positive Center Tap 1–52
- Fast Recovery 1–52
- General Purpose 1–50
- Germanium 1–50
- High Voltage 1–63
- Industrial 1–66
- Microwave Oven 1–63
- Schottky Barrier 1–68
- Selenium 1–63
- Silicon 1–63

Rectifier Modules 1–85
REPLACEMENT GUIDE 2–1
Resistors, Flameproof 1–324
Selector Guides:
- Bipolar Transistors 1–29
- Germanium Transistors 1–39
- RF Transistors 1–36
- Voltage Regulators 1–118/1–120

Special Notes 1–357
Sockets 1–351
SIDACS 1–88
TC Diodes 1–94
TCO (Thermal Cutoffs) 1–98
Temperature Compensating Diodes 1–94
Thermo–Pads 1–322
Thyristors:
- DIAC's 1–89
- SAS 1–89
- SBS 1–87
- SCR's 1–73
- SCS 1–88
- SUS 1–89
- TRIACS 1–79

Thyristors with Integrated Rectifiers 1–78
Thyristor Modules 1–85
Transient Suppressors:
- MOV's 1–93/1–94
- Surge Clamping Diodes 1–95

Transistors:
- Bi–Polar (Numerical Listing) 1–7
- Bi–Polar (Selector Guide) 1–29
- Complementary Pairs 1–28
- Darlington 1–26
- Field Effect 1–41
- Germanium 1–39
- RF Selector Guide 1–36

TRIAC's 1–79
Triplers, High Voltage Multipliers 1–57
TTL IC's 1–281
TV Fixed Voltage Regulators 1–120
TV Focus Dividers 1–57
TV High Voltage Rectifiers 1–63
TV Horizontal Deflection SCR's 1–77
Unijunction Transistors (UJT) 1–87
Varactors 1–90
Variable Capacitance Diodes 1–90
Varistors:
- Metal Oxide (MOV) 1–93/1–94
- Temperature Compensating 1–94

Voltage Reference Diodes (Zener) 1–53
Voltage Regulator Selector Guide 1–118/1–120
Zener Diodes 1–53

NTE PRODUCT NUMERICAL INDEX

NTE Type No.	Page No.	Diag. No.	Description
HVD–1	1–57	59	High Voltage Divider/Focus Assembly, 240 Meg Ohms, 35KV
HVD–2	1–57	59	High Voltage Divider/Focus Assembly, 300 Meg Ohms, 35KV
HVD–3	1–57	59	High Voltage Divider/Focus Assembly, 240 Meg Ohms, 35KV
HVD–4	1–57	59	High Voltage Divider/Focus Assembly, 300 Meg Ohms, 35KV
HVD–12	1–57	59	High Voltage Divider/Focus Assembly, 300 Meg Ohms, 35KV
1N415C	1–90	85	D–Microwave Mixer Diode, X–Band Cartridge Type
1N415E	1–90	85	D–Microwave Mixer Diode, X–Band Cartridge Type
1N416C	1–90	85	D–Microwave Mixer Diode, Y–Band Cartridge Type
1N416E	1–90	85	D–Microwave Mixer Diode, Y–Band Cartridge Type
1V010	1–93	301	Metal Oxide Varistor (MOV), 10V RMS, 45V Clamping
1V014	1–93	301	Metal Oxide Varistor (MOV), 14V RMS, 55V Clamping
1V015	1–93	301	Metal Oxide Varistor (MOV), 15V RMS, 52V Clamping
1V017	1–93	301	Metal Oxide Varistor (MOV), 17V RMS, 60V Clamping
1V020	1–93	301	Metal Oxide Varistor (MOV), 20V RMS, 70V Clamping
1V025	1–93	301	Metal Oxide Varistor (MOV), 25V RMS, 80V Clamping
1V030	1–93	301	Metal Oxide Varistor (MOV), 30V RMS, 95V Clamping
1V035	1–93	301	Metal Oxide Varistor (MOV), 35V RMS, 110V Clamping
1V040	1–93	301	Metal Oxide Varistor (MOV), 43V RMS, 135V Clamping
1V050	1–93	301	Metal Oxide Varistor (MOV), 52V RMS, 150V Clamping
1V060	1–93	301	Metal Oxide Varistor (MOV), 63V RMS, 175V Clamping
1V075	1–93	301	Metal Oxide Varistor (MOV), 75V RMS, 205V Clamping
1V095	1–93	301	Metal Oxide Varistor (MOV), 95V RMS, 250V Clamping
1V115	1–93	301	Metal Oxide Varistor (MOV), 115V RMS, 295V Clamping
1V130	1–93	301	Metal Oxide Varistor (MOV), 135V RMS, 355V Clamping
1V150	1–93	301	Metal Oxide Varistor (MOV), 160V RMS, 410V Clamping
1V250	1–93	301	Metal Oxide Varistor (MOV), 240V RMS, 630V Clamping
1V275	1–93	301	Metal Oxide Varistor (MOV), 260V RMS, 685V Clamping
1V300	1–94	301	Metal Oxide Varistor (MOV), 280V RMS, 740V Clamping
2V010	1–93	302	Metal Oxide Varistor (MOV), 10V RMS, 45V Clamping
2V014	1–93	302	Metal Oxide Varistor (MOV), 14V RMS, 55V Clamping
2V015	1–93	302	Metal Oxide Varistor (MOV), 15V RMS, 48V Clamping
2V017	1–93	302	Metal Oxide Varistor (MOV), 17V RMS, 60V Clamping
2V020	1–93	302	Metal Oxide Varistor (MOV), 20V RMS, 70V Clamping
2V025	1–93	302	Metal Oxide Varistor (MOV), 25V RMS, 80V Clamping
2V030	1–93	302	Metal Oxide Varistor (MOV), 30V RMS, 95V Clamping
2V035	1–93	302	Metal Oxide Varistor (MOV), 35V RMS, 110V Clamping
2V040	1–93	302	Metal Oxide Varistor (MOV), 43V RMS, 135V Clamping
2V050	1–93	302	Metal Oxide Varistor (MOV), 52V RMS, 150V Clamping
2V060	1–93	302	Metal Oxide Varistor (MOV), 63V RMS, 175V Clamping
2V075	1–93	302	Metal Oxide Varistor (MOV), 75V RMS, 205V Clamping
2V095	1–93	302	Metal Oxide Varistor (MOV), 95V RMS, 250V Clamping
2V115	1–93	302	Metal Oxide Varistor (MOV), 115V RMS, 300V Clamping
2V130	1–93	302	Metal Oxide Varistor (MOV), 135V RMS, 355V Clamping
2V150	1–93	302	Metal Oxide Varistor (MOV), 160V RMS, 410V Clamping
2V250	1–93	302	Metal Oxide Varistor (MOV), 240V RMS, 630V Clamping
2V275	1–93	302	Metal Oxide Varistor (MOV), 260V RMS, 685V Clamping
2V300	1–94	302	Metal Oxide Varistor (MOV), 280V RMS, 740V Clamping
2V420	1–94	302	Metal Oxide Varistor (MOV), 420V RMS, 1110V Clamping
2V480	1–94	302	Metal Oxide Varistor (MOV), 480V RMS, 1240V Clamping
10	1–7	9b	T–NPN, Si, UHF Low Noise Amp
11	1–7	9c	T–NPN, Si, High Current Amp, (Compl to NTE12)
12	1–7	9c	T–PNP, Si, High Current Amp, (Compl to NTE11)
13	1–7	516	T–NPN, Si, Low Voltage Output Amp
14	1–7	411	T–PNP, Si, High Power, Low Freq Driver

⇒ DENOTES NEW DEVICE

NTE PRODUCT NUMERICAL INDEX

NTE Type No.	Page No.	Diag. No.	Description
15	1–7	411	T–NPN, Si, VHF Amp, Mixer, OSC, UHF OSC
16	1–7	412	T–NPN, Si, Low Noise, Gen Purp Amp (Compl to NTE17)
17	1–7	412	T–PNP, Si, Low Noise, Gen Purp Amp (Compl to NTE16)
18	1–7	412	T–NPN, Si, AF Driver, Gen Purp Amp (Compl to NTE19)
19	1–7	412	T–PNP, Si, AF Driver, Gen Purp Amp (Compl to NTE18)
20	1–7	412	T–NPN, Si, AF PO, Series Pass (Compl to NTE21)
21	1–7	412	T–PNP, Si, AF PO, Series Pass (Compl to NTE20)
22	1–7	412	T–NPN, Si, AF PO, Dr, Gen Purp Amp
23	1–7	9b	T–NPN, Si, UHF, VHF Amp
24	1–7	413b	T–NPN, Si, Sw, Gen Purp Amp (Compl to NTE25)
25	1–7	413b	T–PNP, Si, Sw, Gen Purp Amp (Compl to NTE24)
26	1–7	508	T–NPN, Si Audio Amp
27	1–7	1a	T–PNP, Ge, High Current, High Gain Amp
28	1–7	2	T–PNP, Ge, High Current, High Gain Amp
29	1–7	1a	T–NPN, Si, High Current, High Power Switch (Compl to NTE30)
30	1–7	1a	T–PNP, Si, High Current, High Power Switch (Compl to NTE29)
31	1–7	3b	T–NPN, Si, TV Sound & Vertical Output (Compl to NTE32)
32	1–8	3b	T–PNP, Si, TV Sound & Vertical Output (Compl to NTE31)
33	1–8	4	T–NPN, Si, High Voltage Power Amp (Compl to NTE34)
34	1–8	4	T–PNP, Si, High Voltage Power Amp (Compl to NTE33)
36	1–8	59a	T–NPN, Si, Audio Power Amp, High Current Switch (Compl to NTE37)
36MP	1–8	59a	Matched Pair of NTE36
37	1–8	59a	T–PNP, Si, Audio Power Amp, High Current Switch (Compl to NTE36)
37MCP	1–8	59a	Matched Compl Pair, Contains 1 Each NTE36 (NPN) and NTE37 (PNP)
38	1–8	6a	T–PNP, Si, High Voltage Medium Power Switch (Compl to NTE175)
39	1–8	7a	T–PNP, Si, Line Operated Series Pass and Switching Reg (Compl to NTE157)
40	1–8	8a	T–NPN, Si, Dual Differential Amp, High Gain, Low Noise, Common Emitter (Compl to NTE41)
41	1–8	8a	T–PNP, Si, Dual Differential Amp, High Gain, Low Noise, Common Emitter (Compl to NTE40)
42	1–8	8a	T–NPN, Si, Dual Differential Amp, High Gain, Low Noise, Common Emitter (Compl to NTE43)
43	1–8	8a	T–PNP, Si, Dual Differential Amp, High Gain, Low Noise, Common Emitter (Compl to NTE42)
44	1–8	8b	T–NPN, Si, Dual, High Gain, Low Noise Bias Amp, Common Base (Compl to NTE45)
45	1–8	8b	T–PNP, Si, Dual, High Gain, Low Noise Bias Amp, Common Base (Compl to NTE44)
46	1–8	9a	T–NPN, Si, Darlington, Gen Purp Amp, Preamp, Driver
47	1–8	9a	T–NPN, Si, High Gain, Low Noise Amp, NF = 5.0dB
48	1–8	3a	T–NPN, Si, Darlington, High Current, Gen Purp Amp
49	1–8	10a	T–NPN, Si, Gen Purp, High Voltage Amp (Compl to NTE50)
50	1–8	10a	T–PNP, Si, Gen Purp, High Voltage Amp (Compl to NTE49)
51	1–9	11a	T–NPN, Si, High Voltage, High Speed Switching
52	1–9	1a	T–NPN, Si, High Voltage, High Speed Switching
53	1–9	1a	T–NPN, Si, High Voltage, High Speed Switching
54	1–9	11a	T–NPN, Si, High Freq Dr for Audio Amp (Compl to NTE55)
54MP	1–9	11a	Matched Pair of NTE54
55	1–9	11a	T–PNP, Si, High Freq Dr for Audio Amp (Compl to NTE54)
55MCP	1–9	11a	Matched Compl Pair, Contains 1 Each NTE54 (NPN) and NTE55 (PNP)
56	1–9	11a	T–NPN, Si, High Gain Switch and Pass Regulator
57	1–9	6a	T–NPN, Si, High Gain Switch and Pass Regulator
58	1–9	13	T–NPN, Si, High Power Audio Output (Compl to NTE59)
59	1–9	13	T–PNP, Si, High Power Audio Output (Compl to NTE58)
60	1–9	1a	T–NPN, Si, High Power for Linear Applications, Audio & Disk Head Pos (Compl to NTE61)
60MP	1–9	1a	Matched Pair of NTE60
61	1–9	1a	T–PNP, Si, High Power for Linear Applications, Audio & Disk Head Pos (Compl to NTE60)
61MCP	1–9	1a	Matched Compl Pair, Contains 1 Each NTE60 (NPN) and NTE61 (PNP)
61MP	1–9	1a	Matched Pair of NTE61

⇒ DENOTES NEW DEVICE

NTE PRODUCT NUMERICAL INDEX

NTE Type No.	Page No.	Diag. No.	Description
62	1–9	1a	T–NPN, Si, High Voltage Horizontal Output
63	1–9	14	T–NPN, Si, High Gain, Low Noise, Wideband Small Signal Amp, P_G = 7.5dB @ 2GHz
64	1–9	14	T–NPN, Si, VHF/Microwave Amp, P_G = 10dB @ 1GHz
65	1–9	175	T–NPN, Si, High Voltage, Low Noise Amp for CATV, MATV
66	1–9	11b	MOSFET–N–Ch, Power, High Speed
67	1–9	11b	MOSFET–N–Ch, Power, High Speed
68	1–9	1a	T–PNP, Si, Gen Purp, High Power Audio Amp (Compl to NTE388)
68MCP	1–9	1a	Matched Compl Pair, Contains 1 Each NTE68 (PNP) and NTE388 (NPN)
69	1–9	9b	T–NPN, Si, UHF/VHF, OSC, Mixer
70	1–9	15	T–NPN, Si, High Voltage Power Amp, Switch
71	1-10	15	T–NPN, Si, High Current Amp, Fast Switch
72	1–10	16	T–NPN, Si, High Current Amp, Fast Switch
73	1–10	17	T–NPN, Si, High Voltage Amp, Switch
74	1–10	18c	T–NPN, Si, Gen Purp Amp
74C00	1–281	247	IC–CMOS, Quad 2–Input Positive NAND Gate
74C02	1–281	247	IC–CMOS, Quad 2–Input Positive NOR Gate
74C04	1–281	247	IC–CMOS, Hex Inverter
74C08	1–281	247	IC–CMOS, Quad 2–Input Positive AND Gate
74C10	1–282	247	IC–CMOS, Triple 3–Input Positive NAND Gate
74C14	1–282	247	IC–CMOS, Hex Schmitt Trigger
74C20	1–282	247	IC–CMOS, Dual 4–Input NAND Gate
74C30	1–283	247	IC–CMOS, 8–Input Positive NAND Gate
74C32	1–283	247	IC–CMOS, Quad 2–Input OR Gate
74C42	1–284	249	IC–CMOS, 4–Line to 10–Line BCD–to–Decimal Decoder
74C48	1–284	249	IC–CMOS, BCD–to–Seven Segment Decoder/Driver with Internal Pull–up Outputs
74C73	1–286	249	IC–CMOS, Dual J–K Flip–Flop with Clear
74C74	1–286	247	IC–CMOS, Dual D–Type Positive Edge Triggered Flip–Flop with Preset and Clear
74C76	1–286	249	IC–CMOS, Dual J–K Flip–Flop with Preset and Clear
74C85	1–287	249	IC–CMOS, 4–Bit Magnitude Comparator
74C90	1–287	247	IC–CMOS, Decade Counter, Divide–by–Two & Divide by Five
74C93	1–287	247	IC–CMOS, 4–Bit Binary Counter, Divide–by–Two & Divide–by–Eight
74C95	1–288	247	IC–CMOS, 4–Bit Parallel Access Shift Register
74C107	1–289	247	IC–CMOS, Dual J–K Flip–Flop w/Clear
74C151	1–291	249	IC–CMOS, 1 of 8 Data Selector/Multiplexer
74C154	1–292	252	IC–CMOS, 4–Line–to–16 Line Decoder/Demultiplexer
74C157	1–292	249	IC–CMOS, Quad 2–to–1 Line Data Selector/Multiplexer with Non–Inverted Outputs
74C160	1–292	249	IC–CMOS, Synchronous 4–Bit Decade Counter with Direct Clear
74C161	1–292	249	IC–CMOS, Binary Counter with Asynchronous Clear
74C164	1–292	247	IC–CMOS, 8–Bit Parallel (Out Serial Shift Register) with Asynchronous Clear
74C173	1–293	249	IC–CMOS, 4–Bit D–Type Flip–Flop with 3–State Outputs
74C174	1–293	249	IC–CMOS, Hex D–Type Flip–Flop with Serial Rail Outputs & Common Direct Clear
74C175	1–293	249	IC–CMOS, Quad D–Type Flip–Flop with Common Direct Clear & Complementary Outputs
74C192	1–294	249	IC–CMOS, Synchronous Up/Down BCD Counter (Dual Clock with Clear)
74C193	1–294	249	IC–CMOS, Synchronous Up/Down Binary Counter (Dual Clock with Clear)
74C221	1–295	249	IC–CMOS, Dual Monostable Multivibrator
74C240	1–295	294	IC–CMOS, Octal Buffer/Line Driver/Receiver with 3–State Inverted Outputs
74C244	1–295	294	IC–CMOS, Octal Buffer/Line Driver/Receiver with 3–State Non–Inverted Outputs
74C373	1–298	294	IC–CMOS, Octal 'D' Transparent Latch with 3–State Output
74C374	1–298	294	IC–CMOS, Octal 'D' Flip–Flop with 3–State Output
74C901	1–301	247	IC–CMOS, Hex Inverting TTL Buffer
74C902	1–301	247	IC–CMOS, Hex Non–Inverting TTL Buffer
74C903	1–301	247	IC–CMOS, Hex Inverting CMOS Buffer
74C904	1–301	247	IC–CMOS, Hex Non–Inverting CMOS Buffer
74C922	1–302	298	IC–CMOS, 16–Key Keyboard Encoder with 3–State Output
74C923	1–302	294	IC–CMOS, 20–Key Keyboard Encoder with 3–State Output
74C925	1–302	249	IC–CMOS, 4–Digit Counter with Multiplexed 7–Segment Output Driver
74H00	1–281	247	IC–TTL, High Speed Quad 2–Input Pos NAND Gate
74H01	1–281	247	IC–TTL, High Speed, Quad 2–Input Positive NAND Gate with Open Collector Outputs
74H04	1–281	247	IC–TTL, High Speed, Hex Inverter

⇒ DENOTES NEW DEVICE

NTE PRODUCT NUMERICAL INDEX

NTE Type No.	Page No.	Diag. No.	Description
74H05	1–281	247	IC–TTL, High Speed, Hex Inverter with Open Collector Outputs
74H08	1–281	247	IC–TTL, High Speed, Quad 2–Input Positive AND Gate
74H10	1–282	247	IC–TTL, High Speed, Triple 3–Input Positive NAND Gate
74H11	1–282	247	IC–TTL, High Speed, Triple 3–Input Positive AND Gate
74H20	1–282	247	IC–TTL, High Speed, Dual 4–Input NAND Gate
74H21	1–282	247	IC–TTL, High Speed, Dual 4–Input AND Gate
74H22	1–282	247	IC–TTL, High Speed, Dual 4–Input NAND Gate with Open Collector Outputs
74H30	1–283	247	IC–TTL, High Speed, 8–Input Positive NAND Gate
74H40	1–283	247	IC–TTL, High Speed, Dual 4–Input NAND Buffer
74H50	1–284	247	IC–TTL, High Speed, Dual 2–Wide, 2–Input AND/OR Invert Gate
74H51	1–284	247	IC–TTL, High Speed, Dual 2–Wide, 2–Input AND/OR Invert Gate
74H52	1–284	247	IC–TTL, High Speed, Expandable 4–Wide AND/OR Gate
74H53	1–285	247	IC–TTL, High Speed, Expandable AND/OR Invert Gate
74H54	1–285	247	IC–TTL, High Speed, 4–Wide AND/OR Invert Gate
74H55	1–285	247	IC–TTL, High Speed, Expandable 2–Wide, 4–Input AND/OR Invert Gate
74H60	1–285	247	IC–TTL, High Speed Dual 4–Input Expander
74H61	1–285	247	IC–TTL, High Speed Triple 3–Input Expander
74H62	1–285	247	IC–TTL, High Speed 4–Wide AND/OR Expander
74H71	1–286	247	IC–TTL, High Speed AND/OR Gated J–K M/S Flip–Flop with Preset
74H72	1–286	247	IC–TTL, High Speed, AND Gated, J–K M/S Flip–Flop with Preset & Clear
74H73	1–286	247	IC–TTL, High Speed, J–K Flip–Flop with Clear
74H74	1–286	247	IC–TTL, High Speed, Dual D–Type Edge Triggered Flip–Flop with Preset & Clear
74H76	1–286	249	IC–TTL, High Speed, Dual J–K Flip–Flop with Preset & Clear
74H78	1–286	247	IC–TTL, High Speed, Dual J–K Flip–Flop with Preset & Clear
74H87	1–287	247	IC–TTL, High Speed, 4–Bit True/Complement–Zero/One Element
74H101	1–288	247	IC–TTL, High Speed, AND/OR Gate J–K Negative Edge Triggered Flip–Flop with Preset
74H102	1–288	247	IC–TTL, High Speed, AND Gated J–K Negative Edge Triggered Flip–Flop with Clear & Reset
74H103	1–288	247	IC–TTL, High Speed, Dual J–K Negative Edge Triggered Flip–Flop with Clears
74H108	1–289	247	IC–TTL, High Speed, Dual J–K Negative Edge Triggered Flip–Flop with Presets, Common Clear & Common Clock
74H183	1–294	247	IC–TTL, High Speed, Dual Carry/Save Full Adder
74L93	1–286	247	IC–TTL, 4–Bit Binary Counter
74LS00	1–281	247	IC–TTL, Low Power Schottky, Quad 2–Input Pos NAND Gate
74LS01	1–281	247	IC–TTL, Low Power Schottky, Quad 2–Input NAND Gate with Open Collector Outputs
74LS02	1–281	247	IC–TTL, Low Power Schottky,Quad 2–Input Pos NOR Gate
74LS03	1–281	247	IC–TTL, Low Power Schottky, Quad 2–Input Pos NAND Gate with Open Collector Outputs
74LS04	1–281	247	IC–TTL, Low Power Schottky, Hex Inverter
74LS05	1–281	247	IC–TTL, Low Power Schottky, Hex Inverter with Open Collector Outputs
⇒ 74LS06	1–281	247	IC–TTL, Low Power Schottky, Hex Inverter/Buffer
74LS08	1–281	247	IC–TTL, Low Power Schottky, Quad 2–Input Pos AND Gate
74LS09	1–281	247	IC–TTL, Low Power Schottky, Quad 2–Input Pos AND Gate with Open Collector Outputs
74LS10	1–282	247	IC–TTL, Low Power Schottky, Triple 3–Input Pos NAND Gate
74LS11	1–282	247	IC–TTL, Low Power Schottky, Triple 3–Input Pos AND Gate
74LS12	1–282	247	IC–TTL, Low Power Schottky, Triple 3–Input Pos NAND Gate with Open Collector Outputs
74LS13	1–282	247	IC–TTL, Low Power Schottky, Dual 4–Input NAND Schmitt Trigger
74LS14	1–282	247	IC–TTL, Low Power Schottky, Hex Schmitt Trigger
74LS15	1–282	247	IC–TTL, Low Power Schottky, Triple 3–Input AND Gate with Open Collector Outputs
74LS20	1–282	247	IC–TTL, Low Power Schottky, Dual 4–Input NAND Gate
74LS21	1–282	247	IC–TTL, Low Power Schottky, Dual 4–Input AND Gate
74LS22	1–282	247	IC–TTL, Low Power Schottky, Dual 4–Input NAND Gate with Open Collector Outputs
74LS26	1–283	247	IC–TTL, Low Power Schottky, Quad 2–Input High Voltage Interface NAND Gate

⇒ DENOTES NEW DEVICE

NTE PRODUCT NUMERICAL INDEX

NTE Type No.	Page No.	Diag. No.	Description
74LS27	1–283	247	IC–TTL, Low Power Schottky, Triple 3–Input Positive NOR Gate
74LS28	1–283	247	IC–TTL, Low Power Schottky, Quad 2–Input NOR Buffer
74LS30	1–283	247	IC–TTL, Low Power Schottky, 8–Input Pos NAND Gate
74LS32	1–283	247	IC–TTL, Low Power Schottky, Quad 2–Input OR Gate
74LS33	1–283	247	IC–TTL, Low Power Schottky, Quad 2–Input NOR Buffer with Open Collector Output
74LS37	1–283	247	IC–TTL, Low Power Schottky, Quad 2–Input NAND Buffer
74LS38	1–283	247	IC–TTL, Low Power Schottky, Quad 2–Input NAND Buffer with Open Collector Gate
74LS40	1–283	247	IC–TTL, Low Power Schottky, Dual 4–Input NAND Buffer
74LS42	1–284	249	IC–TTL, Low Power Schottky, 4–Line–to–10 BCD–to–Decimal Decoder
74LS47	1–284	249	IC–TTL, Low Power Schottky, BCD–to–Seven–Segment Decoder/Driver with Active Low, Open Collector 15V Outputs
74LS48	1–284	249	IC–TTL, Low Power Schottky, BCD–to–Seven–Segment Decoder/Driver with Internal Pull–Up Outputs
74LS49	1–284	247	IC–TTL, Low Power Schottky, BCD–to–Seven–Segment Decoder/Driver with Open Collector Outputs
74LS51	1–284	247	IC–TTL, Low Power Schottky, Dual 2–Wide 2–Input AND/OR Invert Gate
74LS54	1–285	247	IC–TTL, Low Power Schottky, 4–Wide AND/OR Invert Gate
74LS55	1–285	247	IC–TTL, Low Power Schottky, 2–Wide 4–Input AND/OR Invert Gate
74LS63	1–285	247	IC–TTL, Low Power Schottky, Hex Current–Sensing Interface Gate
74LS73	1–286	247	IC–TTL, Low Power Schottky, Dual J–K Flip–Flop with Clear
74LS74A	1–286	247	IC–TTL, Low Power Schottky, Dual D–Type Pos Edge Triggered Flip–Flop with Preset & Clear
74LS75	1–286	249	IC–TTL, Low Power Schottky, 4–Bit Bistable Latch
74LS76A	1–286	249	IC–TTL, Low Power Schottky, Dual J–K Flip–Flop with Preset & Clear
74LS77	1–286	247	IC–TTL, Low Power Schottky, 4–Bit Bistable Latch
74LS78	1–286	247	IC–TTL, Low Power Schottky, Dual J–K Flip–Flop with Preset, Common Clear & Common Clock
74LS83A	1–287	249	IC–TTL, Low Power Schottky, 4–Bit Binary Full Adder with Fast Carry
74LS85	1–287	249	IC–TTL, Low Power Schottky, 4–Bit Magnitude Comparator
74LS86	1–287	247	IC–TTL, Low Power Schottky, Quad 2–Input Exclusive OR Gate
74LS90	1–287	247	IC–TTL, Low Power Schottky, Decade Counter Divide by 2 & 5
74LS91	1–287	247	IC–TTL, Low Power Schottky, 8–Bit Serial Shift Register
74LS92	1–287	247	IC–TTL, Low Power Schottky, Divide–By–12 Counter
74LS93	1–288	247	IC–TTL, Low Power Schottky, 4–Bit Binary Counter Divide by 2 & 8
74LS95B	1–288	247	IC–TTL, Low Power Schottky, 4–Bit Bidirectional Parallel Shift Register
74LS107	1–289	247	IC–TTL, Low Power Schottky, Dual J–K Flip–Flop with Clear
74LS109A	1–289	249	IC–TTL, Low Power Schottky, Dual J–K Pos Edge Triggered Flip–Flop with Clear & Preset
74LS112A	1–289	249	IC–TTL, Low Power Schottky, Dual J–K Negative Edge Triggered Flip–Flop with Preset & Clear
74LS113	1–289	247	IC–TTL, Low Power Schottky, Dual J–K Negative Edge Triggered Flip–Flop with Preset
74LS114	1–289	247	IC–TTL, Low Power Schottky, Dual J–K Negative Edge Triggered Flip–Flop with Preset, Common Clock & Clear
74LS122	1–290	247	IC–TTL, Low Power Schottky, Retriggerable Monostable Multivibrator with Clear
74LS123	1–290	249	IC–TTL, Low Power Schottky, Dual Retriggerable Monostable Multivibrators with Clear
74LS124	1–290	249	IC–TTL, Low Power Schottky, Dual Voltage Controlled Oscillator
74LS125A	1–290	247	IC–TTL, Low Power Schottky, Quad Bus Buffer with 3–State Outputs
74LS126A	1–290	247	IC–TTL, Low Power Schottky, Quad Bus Buffer with 3–State Outputs
74LS132	1–290	247	IC–TTL, Low Power Schottky, Quad 2–Input Pos NAND Schmitt–Trigger
74LS133	1–290	249	IC–TTL, Low Power Schottky, 13–Input NAND Gate
74LS136	1–290	247	IC–TTL, Low Power Schottky, Quad Exclusive–OR Gate with Open Collector Outputs
74LS138	1–291	249	IC–TTL, Low Power Schottky, 1–0f–8 Decoder/Demultiplexer
74LS139	1–291	249	IC–TTL, Low Power Schottky, Dual 2–to–4 Line Decoder/Demultiplexer
74LS145	1–291	249	IC–TTL, Low Power Schottky, BCD–to–Decimal Decoder/Driver for Lamps, Relays MOS
74LS147	1–291	249	IC–TTL, Low Power Schottky, 10–Line Decimal–to–4–Line BCD Priority Encoder
74LS148	1–291	249	IC–TTL, Low Power Schottky, 8–Line to 3–Line Octal Priority Encoder
74LS151	1–291	249	IC–TTL, Low Power Schottky, 1–0f–8 Data Selector/Multiplexer

⇒ DENOTES NEW DEVICE

NTE PRODUCT NUMERICAL INDEX

NTE Type No.	Page No.	Diag. No.	Description
74LS153	1–292	249	IC–TTL, Low Power Schottky, Dual 4–Line–to–1–Line Data Selector/ Multiplexer
74LS155	1–292	249	IC–TTL, Low Power Schottky, Dual 2–Line –to–4–Line Decoder/Demultiplexer with Totem Pole Outputs
74LS156	1–292	249	IC–TTL, Low Power Schottky, Dual 2–Line–to–4–Line Decoder/Demultiplexer with Open Collector Outputs
74LS157	1–292	249	IC–TTL, Low Power Schottky, Quad 2–to–1–Line Data Selector/Multiplexer with Non–Inverted Data Outputs
74LS158	1–292	249	IC–TTL, Low Power Schottky, Quad 2–to–1–Line Data Selector/Multiplexer with Inverted Data Outputs
74LS160A	1–292	249	IC–TTL, Low Power Schottky, Synchronous 4–Bit Decade Counter with Direct Clear
74LS161A	1–292	249	IC–TTL, Low Power Schottky, Synchronous 4–Bit Binary Counter with Direct Clear
74LS162A	1–292	249	IC–TTL, Low Power Schottky, Synchronous 4–Bit Decade Counter with Clear
74LS163A	1–292	249	IC–TTL, Low Power Schottky, Synchronous 4–Bit Binary Counter with Clear
74LS164	1–292	247	IC–TTL, Low Power Schottky, 8–Bit Parallel–Out Serial Shift Register with Asynchronous Clear
74LS165	1–292	249	IC–TTL, Low Power Schottky, 8–Bit Parallel–In/Serial–Out Shift Register
74LS166	1–292	249	IC–TTL, Low Power Schottky, Serial or Parallel–In/Serial–Out Shift Register
74LS168A	1–292	249	IC–TTL, Low Power Schottky, 4–Stage Up/Down, BCD Decade Counter
74LS169A	1–293	249	IC–TTL, Low Power Schottky, 4–State Up/Down, Module 16 Binary Counter
74LS170	1–293	249	IC–TTL, Low Power Schottky, 4–By–4 Register File, Open Collector Outputs
74LS173A	1–293	249	IC–TTL, Low Power Schottky, 4–Bit D–Type Flip–Flop with 3–State Outputs
74LS174	1–293	249	IC–TTL, Low Power Schottky, Hex D–Type Flip Flop with Serial Rail Outputs and Common Direct Clear
74LS175	1–293	249	IC–TTL, Low Power Schottky, Quad D–Type Flip–Flop with Common Direct Clear & Complementary Outputs
74LS181	1–293	252	IC–TTL, Low Power Schottky, 4–Bit Arithmetic Logic Unit
74LS190	1–294	249	IC–TTL, Low Power Schottky, Synchronous Up/Down BCD Counter
74LS191	1–294	249	IC–TTL, Low Power Schottky, Synchronous Up/Down Binary Counter
74LS192	1–294	249	IC–TTL, Low Power Schottky, Synchronous Up/Down BCD Counter (Dual Clock with Clear)
74LS193	1–294	249	IC–TTL, Low Power Schottky, Synchronous Up/Down Binary Counter (Dual Clock with Clear)
74LS194	1–294	249	IC–TTL, Low Power Schottky, 4–Bit Bidirectional Universal Shift Register
74LS194A	1–294	249	IC–TTL, Low Power Schottky, 4–Bit Bidirectional Universal Shift Register
74LS195A	1–294	249	IC–TTL, Low Power Schottky, 4–Bit Parallel Access Shift Register
74LS196	1–294	247	IC–TTL, Low Power Schottky, Presettabl (Bi–Quinary) Decade Counter/Latch
74LS197	1–294	247	IC–TTL, Low Power Schottky, Presettable Binary Counter/Latch
74LS221	1–295	249	IC–TTL, Low Power Schottky, Dual Monostable Multivibrator
74LS240	1–295	294	IC–TTL, Low Power Schottky, Octal Buffer /Line Driver/Receiver with 3–State Inverted Outputs
74LS241	1–295	294	IC–TTL, Low Power Schottky, Octal Buffers/Line/Driver/Receiver with Non–Inverted 3–State Outputs
74LS242	1–295	247	IC–TTL, Low Power Schottky, Quad Bus Transceiver with Inverted 3–State Outpu
74LS243	1–295	247	IC–TTL, Low Power Schottky, Quad Bus Transceiver with Non–Inverted 3–State Outputs
74LS244	1–295	294	IC–TTL, Low Power Schottky, Octal Buffer/Line Driver/Receiver with Non–Inverted 3–State Outputs
74LS245	1–295	294	IC–TTL, Low Power Schottky, Octal Bus Transceiver with Non–Inverted 3–State Outputs
74LS247	1–295	249	IC–TTL, Low Power Schottky, BCD–to–Seven–Segment Decoder/Driver with Active Low, Open Collector 15V Outputs
74LS248	1–295	249	IC–TTL, Low Power Schottky, BCD–to–Seven–Segment Decoder/Driver with Internal Pull–Up Outputs
74LS249	1–295	249	IC–TTL, Low Power Schottky, BCD–to–Seven–Segment Decoder/Driver with Open Collector Outputs
74LS251	1–296	249	IC–TTL, Low Power Schottky, Data Selector/Multiplexer with True & Inverted 3–State Outputs
74LS253	1–296	249	IC–TTL, Low Power Schottky, Dual Data Selector/Multiplexer with 3–State Outputs
74LS257	1–296	249	IC–TTL, Low Power Schottky, Quad Data Selector/Multiplexer with Non–Inverted 3–State Outputs
74LS258	1–296	249	IC–TTL, Low Power Schottky, Quad 2–Input Multiplexer with 3–State Outputs
74LS259	1–296	249	IC–TTL, Low Power Schottky, 8–Bit Addressable Latch

⇒ DENOTES NEW DEVICE

NTE PRODUCT NUMERICAL INDEX

NTE Type No.	Page No.	Diag. No.	Description
74LS260	1–296	247	IC–TTL, Low Power Schottky, Dual 5–Input NOR Gate
74LS266	1–296	247	IC–TTL, Low Power Schottky, Quad 2–Input Exclusive NOR Gate with Open Collector Outputs
74LS273	1–296	294	IC–TTL, Low Power Schottky, Octal–D Type Flip–Flop with Common Clock & Single Rail Outputs
74LS279	1–296	249	IC–TTL, Low Power Schottky, Quad Set–Reset Latch with Diode–Clamped Inputs & Totem Pole Outputs
74LS280	1–296	247	IC–TTL, Low Power Schottky, 9–Bit ODD/EVEN Parity Generator/Checker (N–Bit Cascadable)
74LS283	1–297	249	IC–TTL, Low Power Schottky, 4–Bit Binary Full Adder
74LS290	1–297	247	IC–TTL, Low Power Schottky, Decade Counter (Divide by 2 & 5)
74LS295	1–297	247	IC–TTL, Low Power Schottky, 4–Bit Bidirectional Universal Shift Register
74LS295A	1–297	247	IC–TTL, Low Power Schottky, 4–Bit Shift Register with 3–State Outputs
74LS298	1–297	249	IC–TTL, Low Power Schottky, Quad 2–Input Multiplexer with Storage
74LS299	1–297	294	IC–TTL, Low Power Schottky, 8–Bit Shift/Storage Register with 3–State Outputs
74LS324	1–297	247	IC–TTL, Low Power Schottky, Voltage Controlled Oscillator
74LS327	1–297	247	IC–TTL, Low Power Schottky, Dual Voltage Controlled Oscillator
74LS348	1–297	249	IC–TTL, Low Power Schottky, 8–Line–to–3–Line Priority Encoder
74LS352	1–297	249	IC–TTL, Low Power Schottky, Dual 4–Line–to–1–Line Data Selector/Multiplexer (Inverting version of NTE74LS153)
74LS353	1–298	249	IC–TTL, Low Power Schottky, Dual 4–Line–to–1–Line Data Selector/Multiplexer
74LS363	1–298	294	IC–TTL, Low Power Schottky, Octal Transparent Latch with 3–State Outputs
74LS364	1–298	294	IC–TTL, Low Power Schottky, Octal "D" Flip–Flop with 3–State Outputs
74LS365A	1–298	249	IC–TTL, Low Power Schottky, Hex Buffer/Driver with Non–Inverted 3–State Outputs & Gated Enable Inputs
74LS366A	1–298	249	IC–TTL, Low Power Schottky, Hex Bus Drivers with Inverted 3–State Output & Gated Enable Inputs
74LS367	1–298	249	IC–TTL, Low Power Schottky, Hex Buffer Driver with Non–Inverted 3–State Outputs, Organized to Handle 4–Bit Data
74LS368	1–298	249	IC–TTL, Low Power Schottky, Hex Bus Driver with Non–Inverted 3–State Outputs Organized to Handle 4–Bit Data
74LS373	1–298	294	IC–TTL, Low Power Schottky, Octal D–Type Latch with 3–State Outputs & Common Output Control
74LS374	1–298	294	IC–TTL, Low Power Schottky, Octal D–Type Flip–Flop with 3–State Outputs, Common Output Control and Common Clock
74LS377	1–298	294	IC–TTL, Low Power Schottky, Octal D–Type, Flip–Flop with Common Enable with Clock & Single Rail Outputs
74LS378	1–299	249	IC–TTL, Low Power Schottky, Hex "D" Flip–Flop with Clock Enable
74LS379	1–299	249	IC–TTL, Low Power Schottky, Quad "D" Type Flip–Flop
74LS386	1–299	247	IC–TTL, Low Power Schottky, Quad 2–Input Exclusive OR Gate
74LS390	1–299	249	IC–TTL, Low Power Schottky, Dual Decade Ripple Counter
74LS393	1–299	247	IC–TTL, Low Power Schottky, Dual 4–Bit Binary Ripple Counter
74LS395A	1–299	249	IC–TTL, Low Power Schottky, 4–Bit Cascadable Shift Register with 3–State Outputs
74LS396	1–299	249	IC–TTL, Low Power Schottky, Octal Storage Register with Parallel Access
74LS398	1–299	294	IC–TTL, Low Power Schottky, Quad 2–Port Register
74LS399	1–299	249	IC–TTL, Low Power Schottky, Quad 2–Input Multiplexer with Storage
74LS445	1–300	249	IC–TTL, Low Power Schottky, BCD–to–Decimal Decoder/Driver with Open Collectors
74LS490	1–300	249	IC–TTL, Low Power Schottky, Dual BCD Decade Ripple Counter
74LS540	1–300	294	IC–TTL, Low Power Schottky, Octal Buffer/Line Drive with Inverted 3–State Outputs
74LS541	1–300	294	IC–TTL, Low Power Schottky, Octal Buffer/Line Driver True Output
74LS624	1–300	247	IC–TTL, Low Power Schottky, Voltage Controlled Oscillator
74LS625	1–300	249	IC–TTL, Low Power Schottky, Voltage Controlled Oscillator
74LS626	1–301	249	IC–TTL, Low Power Schottky, Voltage Controlled Oscillator
74LS627	1–301	247	IC–TTL, Low Power Schottky, Voltage Controlled Oscillator
74LS629	1–301	249	IC–TTL, Low Power Schottky, Voltage Controlled Oscillator
74LS640	1–301	294	IC–TTL, Low Power Schottky, Inverting Octal Bus Receiver Transceiver with 3–State Outputs
74LS641	1–301	294	IC–TTL, Low Power Schottky, Non–Inverting Octal Bus Transceiver with Open Collectors
74LS642	1–301	294	IC–TTL, Low Power Schottky, Inverting Octal Bus Transceiver with Open Collectors

⇒ DENOTES NEW DEVICE

NTE PRODUCT NUMERICAL INDEX

NTE Type No.	Page No.	Diag. No.	Description
74LS643	1–301	294	IC–TTL, Low Power Schottky, True & Inverting Octal Bus Transceiver with 3–State Outputs
74LS645	1–301	294	IC–TTL, Low Power Schottky, Octal Bus Transceiver with 3–State Outputs
74LS670	1–301	249	IC–TTL, Low Power Schottky, 4–By–4–Register File with Simultaneous Read/Write, 3–State Outputs & Expandable to 1024 Words
74S00	1–281	247	IC–TTL, Ultra–High Speed, Quad 2–Input Pos NAND Gate
74S02	1–281	247	IC–TTL, Ultra–High Speed, Quad 2–Input Pos NOR Gate
74S03	1–281	247	IC–TTL, Ultra–High Speed, Quad 2–Input Pos NAND Gate with Open Collector Outputs
74S04	1–281	247	IC–TTL, Ultra–High Speed, Hex Inverter
74S05	1–281	247	IC–TTL, Ultra–High Speed, Hex Inverter
74S08	1–281	247	IC–TTL, Ultra–High Speed, Quad 2–Input Pos AND Gate
74S09	1–281	247	IC–TTL, Ultra–High Speed, Quad 2–Input Pos AND Gate with Open Collector Outputs
74S10	1–282	247	IC–TTL, Ultra–High Sped, Triple 3–Input Pos NAND Gate
74S11	1–282	247	IC–TTL, Ultra–High Speed, Triple 3–Input Pos AND Gate
74S15	1–282	247	IC–TTL, Ultra–High Speed, Triple 3–Input AND Gate with Open Collector Outputs
74S20	1–282	247	IC–TTL, Ultra–High Speed, Dual 4–Input NAND Gate
74S22	1–282	247	IC–TTL, Ultra–High Speed, Dual 4–Input NAND Gate with Open Collector Outputs
74S30	1–283	247	IC–TTL, Ultra–High Speed, 8–Input Pos NAND Gate
74S37	1–283	247	IC–TTL, Ultra–High Speed, Quad 2–Input NAND Buffer
74S38	1–283	247	IC–TTL, Ultra–High Speed, Quad 2–Input NAND Buffer with Open Collector Outputs
74S40	1–283	247	IC–TTL, Ultra–High Speed, Dual 4–Input NAND Buffer
74S51	1–284	247	IC–TTL, Ultra–High Speed, Dual 2–Wide 2–Input AND/OR Gate
74S64	1–285	247	IC–TTL, Ultra–High Speed, 4–2–3–2 Input AND/OR Invert Gate with Totem Pole Outputs
74S65	1–285	247	IC–TTL, Ultra–High Speed, 4–2–3–2 Input AND/OR Invert Gate with Open Collector Outputs
74S74	1–286	247	IC–TTL, Ultra–High Speed, Dual D–Type Pos Edge Triggered Flip–Flop with Preset & Clear
74S85	1–287	249	IC–TTL, Ultra–High Speed, 4–Bit Magnitude Comparator
74S86	1–287	247	IC–TTL, Ultra–High Speed, Quad 2–Input Exclusive OR Gate
74S112	1–289	249	IC–TTL, Ultra–High Speed, Dual J–K Negative Edge Triggered Flip–Flop with Preset & Clear
74S113	1–289	247	IC–TTL, Ultra–High Speed, Dual J–K Negative Edge Triggered Flip–Flop with Preset
74S114	1–289	247	IC–TTL, Ultra–High Speed, Dual J–K Negative Edge Triggered Flip–Flop with Preset, Common Clock & Clear
74S124	1–290	249	IC–TTL, Ultra–High Speed, Dual Voltage Controlled Oscillator
74S132	1–290	247	IC–TTL, Ultra–High Speed, Quad 2–Input Pos NAND Schmitt–Trigger
74S133	1–290	249	IC–TTL, Ultra–High Speed, 13–Input Positive NAND Gate
74S134	1–290	249	IC–TTL, Ultra–High Speed, 12–Input Positive NAND Gate with 3–State Output
74S138	1–291	249	IC–TTL, Ultra–High Speed, 1–0f–8 Decoder/Demultiplexer
74S140	1–291	247	IC–TTL, Ultra–High Speed, Dual 4–Input Pos NAND 50 Ohm Line Driver
74S151	1–291	249	IC–TTL, Ultra–High Speed, 1–0f–8 Data Selector/Multiplexer
74S153	1–292	249	IC–TTL, Ultra–High Speed, Dual 4–Line to–1–Line Data Selector/Multiplexer
74S157	1–292	249	IC–TTL, Ultra–High Speed, Quad 2–to–1–Line Data Selector/Multiplexer with Non-Inverted Outputs
74S158	1–292	249	IC–TTL, Ultra–High Speed, Quad 2–to–1–Line Data Selector/Multiplexer with Inverted Data Outputs
74S163	1–292	249	IC–TTL, Ultra–High Speed, Synchronous 4–Bit Binary Counter with Clear
74S174	1–293	249	IC–TTL, Ultra–High Speed, Hex D–Type Flip–Flop with Serial Rail Outputs & Common Direct Clear
74S175	1–293	249	IC–TTL, Ultra–High Speed, Quad D–Type Flip–Flop with Common Direct Clear & Complementary Outputs
74S181	1–293	252	IC–TTL, Ultra–High Speed, Arithmetic Logic/Unit Function Generator
74S182	1–294	249	IC–TTL, Ultra–High Speed, Look–Ahead Carry Generator
74S188	1–294	249	IC–TTL Schottky, 256–Bit PROM, Open Collector Output
74S189	1–294	248	IC–TTL Schottky, 64–Bit RAM, 3–State Outputs
74S194	1–294	249	IC–TTL, Ultra–High Speed, 4–Bit Bi–directional Universal Shift Register
74S251	1–296	249	IC–TTL, Ultra–High Speed, Data Selector /Multiplexer with True & Inverted 3–State Outputs
74S257	1–296	249	IC–TTL, Ultra–High Speed, Quad Data Selector/Multiplexer with Non–Inverted 3–State Outputs
74S258	1–296	249	IC–TTL, Ultra–High Speed, Quad Data Selector/Multiplexer with Inverted 3–State Outputs

⇒ DENOTES NEW DEVICE

NTE PRODUCT NUMERICAL INDEX

NTE Type No.	Page No.	Diag. No.	Description
74S260	1–296	247	IC–TTL, Ultra–High Speed, Dual 5–Input NOR Gate
74S280	1–296	247	IC–TTL, Ultra–High Speed, 9–Bit ODD/EVEN Parity Generator/Checker (N–Bit Cascadable)
74S287	1–297	249	IC–TTL Schottky, 1K PROM, 3–State Outputs
74S288	1–297	249	IC–TTL Schottky, 256–Bit PROM, 3–State Open Collector
74S373	1–298	294	IC–TTL, Ultra–High Speed, Octal D–Type Latch with 3–State Outputs & Common Output Control
74S374	1–298	294	IC–TTL, Ultra–High Speed, Octal D–Type Flip–Flop with 3–State Outputs, Common Output Control & Common Clock
74S387	1–299	249	IC–TTL Schottky, 1K PROM, Open Collector Outputs
74S472	1–300	294	IC–TTL Schottky, 4K PROM, 3–State Outputs
74S474	1–300	252	IC–TTL Schottky, 4K PROM, 3–State Outputs
74S475	1–300	252	IC–TTL Schottky, 4K PROM, Open Collector Outputs
74S570	1–300	249	IC–TTL Schottky, 2K PROM, Open Collector Outputs
74S571	1–300	249	IC–TTL Schottky, 2K PROM, 3–State Outputs
74S572	1–300	298	IC–TTL Schottky, 4K PROM, Open Collector Outputs
74S573	1–300	287	IC–TTL Schottky, 4K PROM, 3–State Outputs
75	1–10	19	T–NPN, Si, Power Amp, Switch
76	1–10	20	T–NPN, Si, CATV Broadband Amp
76MP	1–10	20	Matched Pair of NTE76
77	1–10	21a	T–NPN, Si, CATV Broadband Amp
78	1–10	22a/ 11a	T–NPN, Si, Series Modulation CB, P_O = 3W, 27MHz
79	1–10	22a	T–NPN, Si, Low & Mid Band VHF, CB, P_O = 9W, 27MHz
80	1–10	249	IC–CMOS, Hex 3–State Buffer with Common Enable
80C95	1–302	249	Tri–State Hex Buffer
80C96	1–302	249	IC–CMOS, Hex 3–State Inverter with Common Enable
80C97	1–302	249	IC–CMOS, 3–State Hex Buffer
81	1–10	23	T–NPN, Si, Dual Differential Amp, General Purpose Switch
82	1–10	23	T–PNP, Si, Dual Differential Amp, General Purpose Switch
85	1–10	9c	T–NPN, Si, General Purpose Amp
87	1–10	1a	T–NPN, Si, High Power Audio Amp, (Compl to NTE88)
87MP	1–10	1a	Matched Pair of NTE87
88	1–10	1a	T–PNP, Si, High Power Audio Amp, (Compl to NTE87)
88MP	1–10	1a	T–PNP, Si, Matched Pair of NTE88
88MCP	1–10	1a	Matched Compl Pair, Contains 1 Each NTE87 (NPN) and NTE88 (PNP)
89	1–10	1a	T–NPN, Si, Color TV Horizontal Output Contains Internal Damper Diode
90	1–10	3b	T–NPN, Si, General Purpose High Gain Amp, (Compl to NTE91)
91	1–10	3b	T–PNP, Si, General Purpose High Gain Amp, (Compl to NTE90)
92	1–10	13	T–NPN, Si, Hi–Fi Power Amp, Audio Output, (Compl to NTE93)
93	1–10	13	T–PNP, Si, Hi–Fi Power Amp, Audio Output, (Compl to NTE92)
93L08	1–304	252	IC–TTL, Low Power, Dual, 4–Bit Latch
93L16	1–304	249	IC–TTL, Low Power, 4–Bit Binary Counter
93MCP	1–10	13	Matched Complementary Pair, Contains 1 Each: NTE92 (NPN), NTE93 (PNP)
94	1–10	1a	T–NPN, Si, High Voltage Inverter, Converter, Regulator
95	1–10	18a/ 18b	T–NPN, Si, High Voltage, High Power Switch
96	1–10	18a	T–NPN, Si, High Power Switch
96L02	1–304	249	IC–TTL, Retriggerable/Resettable, Monostable Multivibrator
96LS02	1–304	249	IC–TTL, Low Power Schottky, Retriggerable/Resettable, Monostable Multivibrator
96S02	1–304	249	IC–TTL, Low Power Retriggerable/Resettable Monostable Multivibrator
97	1–11	1a	T–NPN, Si, High Voltage, High Current Darlington
98	1–11	1a	T–NPN, Si High Voltage, High Current Darlington
99	1–11	1a	T–NPN, Si, High Voltage, High Current Darlington
100	1–11	25a	T–PNP, Ge, Oscillator, Mixer, (Compl to NTE101)
101	1–11	25a	T–NPN, Ge, Oscillator, Mixer, (Compl to NTE100)
102	1–11	25a	T–PNP, Ge, Power Output, Driver, (Compl to NTE103)
102A	1–11	26	T–PNP, Ge, Medium Power Amp, (Compl to NTE103A)
103	1–11	25a	T–NPN, Ge, Driver, Power Output, (Compl to NTE102)
103A	1–11	26	T–NPN, Ge, Medium Power Amp, (Compl to NTE102A)
104	1–11	1a	T–PNP, Ge, Audio Power Amp
104MP	1–11	1a	Matched Pair of NTE104
105	1–11	27	T–PNP, Si, Audio Power Amp
106	1–11	28a	T–PNP, Si, Amp, Oscillator, FM Mixer
107	1–11	9c	T–NPN, Si, Amp, Oscillator,

⇒ DENOTES NEW DEVICE

NTE PRODUCT NUMERICAL INDEX

NTE Type No.	Page No.	Diag. No.	Description
108	1–11	9a	T–NPN, Si, RF–IF Amp & Oscillator
108–1	1–11	29a	T–NPN, Si, RF–IF Amp & Oscillator
109	1–11	91	D–Ge, General Purpose
110MP	1–11	91	D–Ge, Matched Pair
112	1–11	91	D–Si, UHF TV Mixer
113A	1–11	104	D–Se, Dual, Common Cathode
115	1–11	101b	D–Se Dual, Common Anode
116	1–11	92	R–Si, 600PRV, 1 Amp
117	1–11	99	R–Si, 600PRV, 1 Amp
118	1–11	186	R–Se, High Voltage TV
120	1–11	100	R–Se, TV Convergence
121	1–11	1a	T–PNP, Ge, Audio Power Amp
121MP	1–11	1a	T–PNP, Ge, Matched Pairs
123	1–11	21a	T–NPN, Si, Audio Amp, Switch
123A	1–11	28a	T–NPN, Si, Audio Amp, Switch (Compl to NTE159M)
123AP	1–11	9a	T–NPN, Si, Audio Amp, Switch (Compl to NTE159)
124	1–11	6a	T–NPN, Si, High Voltage Power Output
125	1–11	92	D–Si, 1000 PRV, 2.5A
126	1–11	28a	T–PNP, Ge, RF–IF Amp, High Speed Switch
126A	1–11	28a	T–PNP, Ge, RF–IF Amp, High Speed Switch
127	1–11	1a	T–PNP, Ge, Power Output, Horiz/Vert Deflection
128	1–11	21a	T–NPN, Si, Audio Output, Driver (Compl to NTE129)
128P	1–11	413a	T–NPN, Si, Gen Purpose Amp, Sw, Plastic NTE128 (Compl to NTE129P)
129	1–11	21a	T–PNP, Si, Audio Output, Driver (Compl to NTE128)
129MCP	1–12	21a	Matched Compl Pair, Contains 1 Each NTE128 (NPN) and NTE129 (PNP)
129P	1–12	413a	T–PNP, Si, Gen Purpose Amp, Sw, Plastic NTE129 (Compl to NTE128P)
130	1–12	1a	T–NPN, Si, Audio, General Purpose Amp, (Compl to NTE219)
130MP	1–12	1a	Matched Pair of NTE130
131	1–12	30	T–PNP, Ge, Audio Power Amp, (Compl to NTE155)
131MP	1–12	30	Matched Pair of NTE131
132	1–41	29b	JFET–N–Ch, RF Amp Mixer
133	1–41	29b	JFET–N–Ch, AF Amp
134A thru 151A	1–53	67	Zener Diode, 3.6V thru 110V, 1W (See also NTE5063A thru NTE5105A)
152	1–12	11a	T–NPN, Si, Audio, Gen Purp Amp, (Compl to NTE153)
152MP	1–12	11a	Matched Pair of NTE152
153	1–12	11a	T–PNP, Si, Audio Gen Purp Amp (Compl to NTE152)
153MCP	1–12	11a	Matched Compl Pair, Contains 1 Each NTE152 (NPN) and NTE153 (PNP)
154	1–12	21a	T–NPN, Si, High Voltage Video Output
155	1–12	30	T–NPN, Ge, Audio Power Output, (Compl to NTE131)
156	1–12	105	R–Si, 1000 PRV, 3A
156A	1–12	98	R–Si, 1000 PRV, 3.5A
157	1–12	7a	T–NPN, Si, High Voltage Audio Amp, (Compl to NTE39)
158	1–12	26	T–PNP, Ge, Audio Power Amp
159	1–12	9a	T–PNP, Si, Low Noise Audio Amp, (Compl to NTE123AP)
159M	1–12	28a	T–PNP, Si, Low Noise Audio Amp, (Compl to NTE123A)
159MCP	1–12	9a	Matched Compl Pair, Contains 1 Each NTE123AP (NPN) and NTE159 (PNP)
160	1–12	31a	T–PNP, Ge, RF–IF Amp, FM Mixer OSC
161	1–12	31a	T–NPN, Si,VHF/UHF Amp, Mixer, OSC
162	1–12	1a	T–NPN, Si, TV Vertical Deflection
163A	1–12	1a	T–NPN, Si, Color TV Horizontal Deflection
164	1–12	1a	T–NPN, Si, Color TV Horizontal Output
165	1–12	1a	T–NPN, Si, Color TV Horizontal Output
166	1–65	96	R–Si, Bridge, 100 PRV 2A
167	1–65	96	R–Si, Bridge, 200 PRV 2A
168	1–65	96	R–Si, Bridge, 400 PRV, 2A
169	1–65	96	R–Si, Bridge, 600 PRV, 2A
170	1–65	96	R–Si, Bridge, 1000 PRV, 2A
171	1–12	10a	T–NPN, Si, Audio, Video Amp,
172A	1–12	9c	T–NPN, Si, Darlington Preamp, Medium
173BP	1–12	190	D–Si, Damper, Bridged Pair, 5KV
174	1–12	173	D–Ge, Damper, 270 PRV, 6A
175	1–12	6a	T–NPN, Si, Linear & Audio Power Amp (Compl to NTE38)
176	1–13	21a	T–PNP, Ge, Audio Power Amp
177	1–13	93	D–Si, Gen Purpose, 200 PRV
178MP	1–13	91	Matched Pair of NTE178
179	1–13	1a	T–PNP, Ge, Audio Power Amp, High Current Switch
179MP	1–13	1a	Matched Pair of NTE179
180	1–13	1a	T–PNP, Si, High Power Audio Amp, (Compl to NTE181)
180MCP	1–13	1a	Matched Compl Pair, Contains 1 Each NTE180 (PNP) and NTE181 (NPN)
181	1–13	1a	T–NPN Si, High Power Audio Amp, (Compl to NTE180)
181MP	1–13	1a	Matched Pair of NTE181 (Compl to NTE180)
182	1–13	33a	T–NPN, Si, Gen Purp Amp, (Compl to NTE183)

⇒ DENOTES NEW DEVICE

NTE PRODUCT NUMERICAL INDEX

NTE Type No.	Page No.	Diag. No.	Description
183	1–13	33a	T–PNP, Si, Gen Purp Amp, (Compl to NTE182)
184	1–13	7a	T–NPN, Si, Audio Power Amp, (Compl to NTE185)
184MP	1–13	7a	Matched Pair of NTE184
185	1–13	7a	T–PNP, Si, Audio Power Amp, (Compl to NTE184)
185MCP	1–13	7a	Matched Compl Pair, Contains 1 Each NTE184 (NPN) and NTE185 (PNP)
186	1–13	10b	T–NPN, Si, Gen Purp Output, Driver (Compl to NTE187)
186A	1–13	22a	T–NPN, Si, Medium Power Audio Amp, (Compl to NTE187A)
187	1–13	10b	T–PNP, Si, Gen Purp Output, Driver (Compl to NTE186)
187A	1–13	22a	T–PNP, Si, High Voltage Amp & Driver, (Compl to NTE186A)
188	1–13	34	T–NPN, Si, High Voltage Amp & Driver, (Compl to NTE189)
189	1–13	34	T–PNP, Si, High Voltage Amp & Driver, (Compl to NTE188)
190	1–13	34	T–NPN, Si, High Voltage Amp, Horiz Driver
191	1–13	34	T–NPN, Si, High Voltage Video Amp
192	1–13	35a	T–NPN, Si, Audio Power Output, (Compl to NTE193)
192A	1–13	35b	T–NPN, Si, Audio Power Output, (Compl to NTE193A)
193	1–13	35a	T–PNP, Si, Audio Power Output, (Compl to NTE192)
193A	1–14	35b	T–PNP, Si, Audio Power Output, (Compl to NTE192A)
194	1–14	9a	T–NPN, Si, General Purpose HV Amp/Switch
195A	1–14	21a	T–NPN, Si, RF Pwr Amp, Driver P_O = 3.5W
196	1–14	11a	T–NPN, Si, Audio Power Output, (Compl to NTE197)
197	1–14	11a	T–PNP, Si, Audio Power Output, (Compl to NTE196)
198	1–14	11a	T–NPN, Si, High Voltage Audio Output
199	1–14	9c	T–NPN, Si, Low Noise, Hi Gain PreAmp, (Compl to NTE234)
209	1–14	355	Socket for TO–3 Package (2/Pkg)
210	1–14	10a	T–NPN, Si, Gen Purp Output, Driver (Compl to NTE211)
211	1–14	10a	T–PNP, Si, Gen Purp Output, Driver (Compl to NTE210)
213	1–14	27	T–PNP, Ge, High Power, High Gain Amplifier
214	1–14	59a	T–NPN, Si, Darlington Driver
215	1–14	59a	T–NPN, Si, Darlington Driver
217	1–14	413a	T–NPN, Si, High Speed Sw, Amp
218	1–14	6a	T–PNP, Si, Audio Power Output
219	1–14	1a	T–PNP, Si, General Purpose Amplifier, (Compl to NTE130)
219MCP	1–14	1a	Matched Compl Pair, Contains 1 Each NTE130 (NPN) and NTE219 (PNP)
221	1–41	31d	MOSFET–N–Ch, VHF Amp/Mix
222	1–41	31d	MOSFET–N–Ch, VHF Amp/Mix
224	1–14	37	T–NPN, Si, RF Power Output, P_O = 4W, 50MHz
225	1–14	37	T–NPN, Si, High Speed Switch & Linear Amp
226	1–14	30a	T–PNP, Ge, Audio Power Output
226MP	1–14	30a	Matched Pair of NTE226
227	1–14	413a	T–NPN, Si, High Voltage Amp, Video Output
229	1–14	9b	T–NPN, Si, VHF OSC, Mixer, IF Amp, P_G = 28db @ 45MHz
230	1–76	6b	SCR–Horizontal Deflection
231	1–76	6b	SCR–Horizontal Deflection
232	1–13	9a	T–PNP, Si, Darlington Amp Preamp
233	1–13	9a	T–NPN, Si, Video IF, OSC
234	1–13	9c	T–PNP, Si, Low Noise, High Gain AF
235	1–13	11a	T–NPN, Si, RF Power Output, P_O = 5W @ 50MHz
236	1–15	11a	T–NPN, Si, RF Power Output, P_O = 13W @ 50MHz
237	1–15	39	T–NPN, Si, RF Power Output, P_O = 3.5W @ 27MHz
238	1–15	1a	T–NPN, Si, Color TV, Horizontal Output
239	1–15	129	SCS–TV Vert OSC
240	1–15	34	T–PNP, Si, High Voltage, Low Saturation Video Output, (Compl to NTE191)
241	1–15	11a	T–NPN, Si, Audio Power Amp, (Compl to NTE242)
242	1–15	11a	T–PNP, Si, Audio Power Amp, (Compl to NTE241)
243	1–15	1a	T–NPN, Si, Darlington Power Amp, h_{FE} = 2500, (Compl to NTE244)
244	1–15	1a	T–PNP, Si, Darlington Power Amp, h_{FE} = 2500, (Compl to NTE243)
245	1–15	1a	T–NPN, Si, Darlington Power Amp, h_{FE} = 4000, (Compl to NTE246)
246	1–15	1a	T–PNP, Si, Darlington Power Amp, h_{FE} = 4000, (Compl to NTE245)
247	1–15	1a	T–NPN, Si, Darlington Power Amp, h_{FE} = 3000, (Compl to NTE248)
248	1–15	1a	T–PNP, Si, Darlington Power Amp, h_{FE} = 3000, (Compl to NTE247)
248	1–15	1a	T–PNP, Si, Darlington Power Amp, h_{FE} = 3000, (Compl to NTE247)
249	1–15	1a	T–NPN, Si, Darlington Power Amp, h_{FE} = 4000, (Compl to NTE250)
250	1–15	1a	T–PNP, Si, Darlington Power Amp, h_{FE} = 4000, (Compl to NTE249)

⇒ DENOTES NEW DEVICE

NTE PRODUCT NUMERICAL INDEX

NTE Type No.	Page No.	Diag. No.	Description
251	1–15	1a	T–NPN, Si, Darlington Power Amp, h_{FE} = 2500, (Compl to NTE252)
252	1–15	1a	T–PNP, Si, Darlington Power Amp, h_{FE} = 2500, (Compl to NTE251)
253	1–15	7a	T–NPN, Si, Darlington Power Amp, h_{FE} = 2500, (Compl to NTE254)
253MCP	1–15	7a	Matched Compl Pair, Contains 1 Each NTE253 (NPN) and NTE254 (PNP)
254	1–15	7a	T–PNP, Si, Darlington Power Amp, h_{FE} = 2500, (Compl to NTE253)
255	1–15	413a	T–NPN Si, Horizontal Driver, Amp
256	1–15	55	T–NPN Si, Darlington
257	1–15	33a	T–NPN, Si, Darlington Power Amp, h_{FE} = 750,
259	1–15	33a	T–NPN, Si Darlington Power Amp, h_{FE} = 4000
261	1–15	11a	T–NPN, Si, Darlington Power Amp, h_{FE} = 1000, (Compl to NTE262)
262	1–15	11a	T–PNP, Si, Darlington Power Amp, h_{FE} = 1000, (Compl to NTE261)
263	1–15	11a	T–NPN, Si, Darlington Power Amp, h_{FE} = 1000, (Compl to NTE264)
264	1–16	11a	T–PNP, Si, Darlington Power Amp, h_{FE} = 1000, (Compl to NTE263)
265	1–16	10a	T–NPN, Si, Darlington Power Amp, h_{FE} = 10,000
266	1–16	10a	T–NPN, Si, Darlington Power Amp, h_{FE} = 40,000
267	1–16	10a	T–NPN, Si, Darlington Power Amp, h_{FE} = 90,000
268	1–16	10a	T–NPN, Si, Darlington Power Amp, h_{FE} = 1000, (Compl to NTE269)
269	1–16	10a	T–PNP, Si, Darlington Power Amp, h_{FE} = 1000, (Compl to NTE268)
270	1–16	55	T–NPN, Si, Darlington Power Amp, h_{FE} = 1000, (Compl to NTE271)
271	1–16	55	T–PNP, Si, Darlington Power Amp, h_{FE} = 1000, (Compl to NTE270)
272	1–16	34	T–NPN, Si, Darlington Power Amp, h_{FE} = 25,000, (Compl to NTE273)
273	1–16	34	T–PNP, Si, Darlington Power Amp, h_{FE} = 25,000, (Compl to NTE272)
274	1–16	6a	T–NPN, Si, Darlington Power Amp, h_{FE} = 3000, (Compl to NTE275)
275	1–16	6a	T–PNP, Si, Darlington Power Amp, h_{FE} = 3000, (Compl to NTE274)
276	1–78	119	SCR–Gate Controlled Switch, Horizontal Output
278	1–16	21a	T–NPN, Si, Broadband RF Amp, CATV, MATV
280	1–16	1a	T–NPN, Si, Audio Output, (Compl to NTE281)
280MP	1–16	1a	Matched Pair of NTE280
281	1–16	1a	T–PNP, Si, Audio Output, (Compl to NTE280)
281MCP	1–16	1a	Matched Compl Pair, Contains 1 Each NTE280 (NPN) and NTE281 (PNP)
282	1–16	21a	T–NPN, Si, RF Power Output, P_O = 4W @ 27MHz
283	1–16	1a	T–NPN, Si, High Voltage, High Current Switch, Horiz Output
284	1–16	1a	T–NPN, Si, Audio Amp Output, (Compl to NTE285)
284MP	1–16	1a	Matched Pair of NTE284
285	1–16	1a	T–PNP, Si, Audio Amp Output, (Compl to NTE284)
285MP	1–16	1a	Matched Pair of NTE285
285MCP	1–16	1a	Matched Compl Pair, Contains 1 Each NTE284 (NPN) and NTE285 (PNP)
287	1–16	9a	T–NPN, Si, High Voltage, General Purpose Amp, (Compl to NTE288)
288	1–16	9a	T–PNP, Si, High Voltage, General Purpose Amp, (Compl to NTE287)
289	1–17	9c	T–NPN, Si, Audio Power Amp & Switch, (Compl to NTE290)
289A	1–17	9c	T–NPN, Si, Audio Power Amp & Switch, (Compl to NTE290A)
289AMP	1–17	9c	Matched Pair of NTE289A
289MP	1–17	9c	Matched Pair of NTE289
290	1–17	9c	T–PNP, Si, Audio Amp & Switch, (Compl to NTE289)
290A	1–17	9c	T–PNP, Si, Audio Amp & Switch, (Compl to NTE289A)
290AMCP	1–17	9c	Matched Compl Pair, Contains 1 Each NTE289A (NPN) and NTE290A (PNP)
291	1–17	11a	T–NPN, Si, General Purpose Amp, (Compl to NTE291)
292	1–17	11a	T–PNP, Si, General Purpose Amp, (Compl to NTE292)
292MCP	1–17	11a	Matched Compl Pair, Contains 1 Each NTE291 (NPN) and NTE292 (PNP)
293	1–17	3b	T–NPN, Si, Audio Amp & Driver, (Compl to NTE294)
293MP	1–17	3b	Matched Pair of NTE293
294	1–17	3b	T–PNP, Si, Audio Amp & Driver (Compl to NTE293)
295	1–17	7a	T–NPN, Si, RF Power Output, Driver
296	1–17	10a	T–PNP, Si, High Voltage General Purpose Amp, (Compl to NTE171)
297	1–17	3b	T–NPN, Si, Audio Amp & Driver, (Compl to NTE298)
297MP	1–17	3b	Matched Pair of NTE297
298	1–17	3b	T–PNP, Si, Audio Amp & Driver, (Compl to NTE297)
299	1–17	10c	T–NPN, Si, RF Power Amp, Driver

⇒ DENOTES NEW DEVICE

NTE PRODUCT NUMERICAL INDEX

NTE Type No.	Page No.	Diag. No.	Description
300	1–17	10c	T–NPN, Si, Audio Power Amp, (Compl to NTE307)
300MP	1–17	10c	Matched Pair of NTE300
302	1–17	60b	T–NPN, Si, CB Transmitter, Driver, Switch
⇒ 303	1–351	482	Thermal Compound, 1 Gram/Tube
306	1–17	60a	T–NPN, Si, CB Transmitter, Driver, Switch
307	1–17	10c	T–PNP, Si, Audio Power Amp, (Compl to NTE300)
308	1–17	6b	Integrated Thyristor Rectifier, Metal Pkg
308P	1–78	11c	Integrated Thyristor Rectifier, Plastic Pkg
309K	1–118	1c	IC–Vltg Regulator, 5V, 1 Amp
310	1–78	6b	Integrated Thyristor Rectifier Metal Pkg
310P	1–78	11c	Integrated Thyristor Rectifier Plastic Pkg
311	1–17	21a	T–NPN, Si, Freq Multiplier, Driver VHF/UHF
312	1–41	9d	JFET–N–Ch, VHF Amp, Mix
313	1–17	41	T–NPN, Si, VHF Mixer and VHF/RF/Amp
314	1–76	118	SCR–440V, 12.5A
315	1–18	42	T–NPN, Si, Medium Power Audio Amp
316	1–18	31a	T–NPN, Si, High Gain, Low Noise Amp NF = 4.5dB
317	1–18	43	T–NPN, Si, CB, RF Power Output P_O = 70W @ 30MHz
318	1–18	43	T–NPN, Si, CB RF Power Output P_O = 50W @ 30MHz
319	1–18	31b	T–NPN, Si, VHF Amp with Fwd AGC
319P	1–18	9b	T–NPN, Si, VHF Amp with Fwd AGC
320	1–18	45	T–NPN, Si, RF Power Amp P_O = 40W @ 175MHz
320F	1–18	47	T–NPN, Si, RF Power Amp P_O = 40W @ 175MHz
322	1–18	34	T–NPN, Si, RF Power Output P_O = 3.5W @ 27MHz
323	1–18	21a	T–PNP, Si, General Purpose Amp, (Compl to NTE324)
324	1–18	21a	T–NPN, Si, General Purpose Amp, (Compl to NTE323)
325	1–18	46	T–NPN, Si, RF Power Output P_O = 50W @ 30MHz
326	1–41	9o	JFET–P–Ch, Gen Purp Amp
327	1–18	1a	T–NPN, Si, High Power Amp Switch
328	1–18	1a	T–NPN, Si, High Power Amp Switch
329	1–18	21a	T–NPN, Si, RF Power Output P_O = 3.5W @ 27MHz
330	1–18	27	T–PNP, Ge, High Power Switch Low Loss Regulator
331	1–18	11a	T–NPN, Si, Audio Power Amp, Switch, (Compl to NTE332)
331MP	1–18	11a	Matched Pair of NTE331
332	1–18	11a	T–PNP, Si, Audio Power Amp & Switch, (Compl to NTE331)
332MCP	1–18	11a	Matched Compl Pair, Contains 1 Each NTE331 (NPN) and NTE332 (PNP)
333	1–18	47	T–NPN, Si, RF Power Output P_O = 60W @ 30MHz
334	1–18	46	T–NPN, Si, RF Power Output P_O = 60W @ 30MHz
335	1–18	43	T–NPN, Si, RF Power Output P_O = 80W @ 30MHz
336	1–18	48	T–NPN, Si, RF Power Output P_O = 80W @ 30MHz
337	1–18	46	T–NPN, Si, RF Power Amp Driver P_O = 8W @ 50MHz
338	1–19	46	T–NPN, Si, RF Power Amp Driver P_O = 20W @ 50MHz
338F	1–19	47	T–NPN, Si, RF Power Amp Driver P_O = 20W @ 50MHz
339	1–19	48	T–NPN, Si, RF Power Output P_O = 40W @ 50MHz
340	1–19	3b	T–NPN, Si, RF Power Output P_O = 4W @ 175MHz
341	1–19	21b	T–NPN, Si, RF Power Output P_O = 4W @ 175MHz
342	1–19	61	T–NPN, Si, RF Power Output P_O = 7W @ 175MHz
343	1–19	61	T–NPN, Si, RF Power Output P_O = 14W @ 175MHz
344	1–19	50	T–NPN, Si, RF Power Output P_O = 30W @ 175MHz
345	1–19	46	T–NPN, Si, RF Power Output P_O = 30W @ 175MHz
346	1–19	21a	T–NPN, Si, RF Power Amp Driver P_O = 1W @ 175MHz
347	1–19	51	T–NPN, Si, RF Power Output P_O = 3W @ 175MHz
348	1–19	46	T–NPN, Si, RF Power Output P_O = 3W @ 175MHz
349	1–19	46	T–NPN, Si, RF Power Output P_O = 10W @ 175MHz
350	1–19	46	T–NPN, Si, RF Power Output P_O = 15W @ 175MHz
350F	1–19	47	T–NPN, Si, RF Power Output P_O = 15W @ 175MHz
351	1–19	46	T–NPN, Si, RF Power Output. P_O = 25W @ 175MHz
352	1–19	52	T–NPN, Si, RF Power Output P_O = 80W @ 175MHz
353	1–19	47	T–PNP, Si, RF Power Output P_O = 4W @ 175MHz
354	1–19	47	T–PNP, Si, RF Power Output P_O = 30W @ 175MHz
356	1–19	47	T–PNP, Si, RF Power Output P_O = 40W @ 175MHz

⇒ DENOTES NEW DEVICE

NTE PRODUCT NUMERICAL INDEX

NTE Type No.	Page No.	Diag. No.	Description
357	1–19	51	T–NPN, Si, RF Power Output P_O = 7W @ 175MHz
358	1–99	197	Crystal, 3.5759545, Parallel Resonant
358A	1–99	196	Crystal, 3.5759545, Series Resonant
358B	1–99	197	Crystal, 3.5759545, Parallel Resonant
358C	1–99	195	Crystal, 3.5759545, Parallel Resonant
359	1–19	46	T–NPN, Si, RF Power Output P_O = 20W @ 175MHz
360	1–19	46	T–NPN, Si, RF Power Output P_O = 40W @ 175MHz
361	1–19	21b	T–NPN, Si, RF Power Output P_O = 2W @ 512MHz
362	1–20	53	T–NPN, Si, RF Power Output P_O = 2W @ 512MHz
363	1–20	53	T–NPN, Si, RF Power Output P_O = 4W @ 512MHz
365	1–20	52	T–NPN, Si, RF Power Output P_O = 15W @ 512MHz
366	1–20	52	T–NPN, Si, RF Power Output P_O = 25W @ 512MHz
367	1–20	52	T–NPN, Si, RF Power Output P_O = 45W @ 512MHz
368	1–20	52	T–NPN, Si, RF Power Output P_O = 60W @ 512MHz
369	1–20	6a	T–NPN, Si, Vertical Deflection, Switch
373	1–20	7a	T–NPN, Si, Audio Amp & Driver, (Compl to NTE374)
374	1–20	7a	T–PNP, Si, Audio Amp & Driver, (Compl to NTE373)
375	1–20	11a	T–NPN, Si, Vertical Deflection, (Compl to NTE398)
376	1–20	11a	T–NPN, Si, TV Power Supply Driver/Audio Output
377	1–20	11a	T–NPN, Si, Power Amp, Driver, Switch, (Compl to NTE378)
378	1–20	11a	T–PNP, Si, Power Amp, Driver, Switch, (Compl to NTE377)
379	1–20	11a	T–NPN, Si, Power Amp, High Voltage Switch
382	1–20	42	T–NPN, Si, Audio Frequency Driver, (Compl to NTE383)
383	1–20	42	T–PNP, Si, Audio Frequency Driver, (Compl to NTE382)
384	1–20	6a	T–NPN, Si, High Voltage Power Amp Switch
385	1–20	1a	T–NPN, Si, Audio Power Amp, Switch
386	1–20	1a	T–NPN, Si, Audio Power Amp, Switch
387	1–20	1a	T–PNP, Si, Power Amp, Switch
387MP	1–20	1a	Matched Pair of NTE387
388	1–20	1a	T–NPN, Si, High Power Audio Amp (Compl to NTE68)
389	1–20	1a	T–NPN, Si, Horizontal Output
390	1–20	55	T–NPN, Si, Power Amp & High Speed Switch, (Compl to NTE391)
391	1–20	55	T–PNP, Si, Power Amp & High Speed Switch, (Compl to NTE390)
392	1–21	55	T–NPN, Si, Power Amp & High Speed Switch, (Compl to NTE393)
393	1–21	55	T–PNP, Si, Power Amp & High Speed Switch, (Compl to NTE392)
394	1–21	55	T–NPN, Si, Power Amp, High Voltage Switch
395	1–21	31a	T–PNP, Si, Wide Band Linear Amp
396	1–21	21a	T–NPN, Si, Power Amp & High Speed Switch, (Compl to NTE397)
397	1–21	21a	T–PNP, Si, Power Amp & High Speed Switch, (Compl to NTE396)
398	1–21	11a	T–PNP, Si, Vertical Deflection, Audio Amp, (Compl to NTE375)
399	1–21	3b	T–NPN, Si, High Voltage Amp, Video
400	1–351	362	Heat Sink for TO5 Package (2/Pkg)
401	1–351	352	Heat Sink for TO5 Package (2/Pkg)
402	1–351	363	Heat Sink for Plastic Power Packages (2/Pkg)
403	1–351	364	Heat Sink for Plastic Power Packages (2/Pkg)
404	1–351	365	Heat Sink for TO66 Style Package
405	1–351	366	Heat Sink Kit for TO3 Style Package
406	1–351	367	Heat Sink for TO202 Style Package (2/Pkg)
406A	1–351	–	Heat Sink for TO220 Style Package (2/Pkg)
409	1–351	356	Socket, IC, 14 Pin DIP (2/Pkg)
410	1–351	354	Heat Sink for TO1 Style Package (2/Pkg)
411	1–351	345	Heat Sink Stud Mount for TO39/TO5 (2/Pkg)
412	1–351	367	Heat Sink for TO18 Style Package (2/Pkg)
413	1–351	–	Hardware, Insulator Kit for TO3 Style Package
414	1–351	–	Hardware, Insulator Kit for TO36 Style Package
415	1–351	–	Hardware, Insulator Kit for TO66 Style Package
416	1–351	357	Socket, IC, 16 Pin DIP (2/Pkg)
417	1–351	368	Socket, 3 Pin TO18 Style Package
418	1–351	369	Socket, 4 Pin TO18 Style Package
419	1–351	370	Socket, 3 Pin TO5 Style Package
421	1–351	372	Socket for Standard TO66 Style Package
422	1–351	–	Hardware, Insulator Kit for TO220 Style Package
423	1–351	353	Socket, IC, 8 Pin DIP (2/Pkg)

⇒ DENOTES NEW DEVICE

NTE PRODUCT NUMERICAL INDEX

NTE Type No.	Page No.	Diag. No.	Description
426	1–352	–	Hardware, Metric Kit of 3mm, Nuts Bolts
428	1–351	358	Socket, IC, 24 Pin DIP (2/Pkg)
429	1–351	359	Socket, IC, 28 Pin DIP
430	1–352	360	Socket, IC, 40 Pin DIP
432	1–352	361	Hardware, Thread Converter 3/8"–24 to 1/2"–20 (2/Pkg)
433	1–352	418	Hardware, HV Splice for CRT
⇒ 435K28	1–352	–	Socket, IC, 28 Pin DIP, 0.07 (1.78) Spacing
⇒ 435K30	1–352	–	Socket, IC, 30 Pin DIP, 0.07 (1.78) Spacing
⇒ 435K42	1–352	–	Socket, IC, 42 Pin DIP, 0.07 (1.78) Spacing
⇒ 435K64	1–352	–	Socket, IC, 64 Pin DIP, 0.07 (1.78) Spacing
435P6	1–352	524	Socket, IC, 6 Pin DIP (2/Pkg)
435P18	1–352	374	Socket, IC, 18 Pin DIP (2/Pkg)
435P20	1–352	375	Socket, IC, 20 Pin DIP (2/Pkg)
435P22	1–352	376	Socket, IC, 22 Pin DIP (2/Pkg)
436W8	1–352	525	Socket, IC, 8 Pin DIP, Wire Wrap Leads (2/Pkg)
436W14	1–352	526	Socket, IC, 14 Pin DIP, Wire Wrap Leads (2/Pkg)
436W16	1–352	527	Socket, IC, 16 Pin DIP, Wire Wrap Leads (2/Pkg)
436W18	1–352	528	Socket, IC, 18 Pin DIP, Wire Wrap Leads (2/Pkg)
436W20	1–352	529	Socket, IC, 20 Pin DIP, Wire Wrap Leads
436W22	1–352	530	Socket, IC, 22 Pin DIP, Wire Wrap Leads
436W24	1–352	531	Socket, IC, 24 Pin DIP, Wire Wrap Leads
436W28	1–352	532	Socket, IC, 28 Pin DIP, Wire Wrap Leads
436W40	1–352	533	Socket, IC, 40 Pin DIP, Wire Wrap Leads
438	1–351	344	Hardware, Insulator Kit for DO4, TO64
439	1–351	–	Hardware, Insulator Kit for DO5, TO48
440A	1–351	520	Heat Sink, Undrilled
440B	1–351	520	Heat Sink, Mounting for TO3, TO48, TO66, TO126, TO127, TO220, DO5
440C	1–351	520	Heat Sink, Mounting for TO3, TO15, TO6, TO36, TO64, DO4
441A	1–351	521	Heat Sink, Drilled for Solid State Relay
441B	1–351	521	Heat Sink, Undrilled
442C	1–351	–	Heat Sink, Undrilled
448B	1–351	425	Heat Sink for 14/16 Pin DIP (2/Pkg)
448E	1–351	426	Heat Sink for 24–Pin DIP (2/Pkg)
448G	1–351	427	Heat Sink for 40–Pin DIP (2/Pkg)
450A	1–351	420	Heat Sink for 14–Pin DIP
451	1–41	9e	JFET, N–Ch, UHF/VHF Amp. NF = 4dB @ 400MHz
452	1–41	31e	JFET, N–Ch, VHF Amp/Mixer. NF = 4dB @ 400MHz
453	1–41	36	JFET, N–Ch, FM Tuner/VHF Amp. NF = 2dB @ 100MHz
454	1–41	31d	MOSFET, N–Ch, Dual Gate, TV UHF/RF Amp, Gate Protected
455	1–41	12	MOSFET, N–Ch, Dual Gate, TV UHF/RF 900 MHz, Gate Protected
456	1–41	31c	JFET, N–Ch, Gen Purpose Amp Switch. NF = 2.5db @ 100kHz
457	1–41	9e	JFET, N–Ch, Gen Purp Amp Switch
458	1–41	9f	JFET, N–Ch, Gen Purp, Low Noise Amp. NF = 3.0dB @ 100kHz
459	1–41	31e	JFET, N–Ch, AF Amp/Chopper/Sw
460	1–41	31f	JFET, P–Ch, AF Amp
461	1–41	44	JFET, N–Ch, Matched Dual. DC Amp/Sampler/Chopper
466	1–41	28c	JFET, N–Ch, Chopper/Switch
467	1–41	9e	JFET, N–Ch, Chopper/High Speed Switch
470	1–21 1–21	43	T–NPN, Si, RF Power Output, P_O = 100W @ 30MHz
471	1–21	43	T–NPN, Si, RF Power Output, P_O = 100W @ 30MHz
472	1–21	21a	T–NPN, Si, RF Power Driver, P_O = 1.8W @ 175MHz
473	1–21	21a	T–NPN, Si, RF Power Driver, P_O = 1.8W @ 175MHz
474	1–21	10e	T–NPN, Si, RF Power Output, P_O = 6W @ 88MHz
475	1–21	58a	T–NPN, Si, RF Power Output, P_O = 7W @ 175MHz
476	1–21	58a	T–NPN Si, RF Power Output, P_O = 12W @ 175MHz
477	1–21	52	T–NPN, Si, RF Power Output, P_O = 45W @ 175MHz
478	1–21	52	T–NPN, Si, RF Power Output P_O = 100W @ 175MHz
480	1–21	52	T–NPN, Si, RF Power Output for Broadband Amp. P_O = 40W @ 512MHz
481	1–21	63	T–NPN, Si, RF Power Output for UHF. P_O = 6W @ 866MHz
482	1–21	170a	T–NPN, Si, RF Power Output for Mobile Use, P_O = 15W @ 866MHz
483	1–21	63	T–NPN, Si, RF Power Output for Mobile Use, P_O = 18W @ 866MHz
484	1–21	63	T–NPN, Si, RF Power Output for Mobile Use, P_O = 25W @ 947MHz
485	1–21	170b	T–NPN, Si, RF Power Output, P_O = 25W @ 866MHz

⇒ DENOTES NEW DEVICE

NTE PRODUCT NUMERICAL INDEX

NTE Type No.	Page No.	Diag. No.	Description
486	1–21	21a	T–NPN, Si, RF Power Output, P_O = 75W @ 512MHz
488	1–21	21c	T–NPN, Si, RF Power Output, P_O = 25W @ 866MHz
500A	1–57	69	Multiplier, High Voltage Tripler
503	1–63	187	R–Se, High Voltage for TV Use, 14.3K PRV
504	1–63	188	R–Se, High Voltage for TV Use, 19.8K PRV
505	1–63	189	R–Se, High Voltage for TV Use, 22K PRV
506	1–50	535	R–Si, High Voltage, Damping, Fast Recovery, 1400V, 2A
507	1–50	92	D–Si, General Purpose
508	1–63	87	R–Si, High Voltage Vacuum Tube Replacement
509	1–63	87	R–Si, High Voltage Vacuum Tube Replacement
510	1–63	87	R–Si, High Voltage Vacuum Tube Replacement
511	1–63	89	R–Si, High Voltage Vacuum Tube Replacement
512	1–63	90	R–Si, High Voltage Vacuum Tube Replacement
513	1–63	191	R–Si, High Voltage Vacuum Tube Replacement
514	1–63	87	R–Si, High Voltage Vacuum Tube Replacement
515	1–50	392	D–Si, High Voltage, SCR Deflection Clamp
518	1–63	49	R–Si, High Voltage, TV Use, 10K PRV
519	1–50	93	D–Si, Ultra Fast Switch, 100V PRV
521	1–57	71	Multiplier, High Voltage Tripler
522	1–57	69	Multiplier, High Voltage Tripler
523	1–57	70	Multiplier, High Voltage Tripler
524V13	1–93	192	Metal Oxide Varistor (MOV), 135 VRMS, 355V Clamping
524V15	1–93	192	Metal Oxide Varistor (MOV) 160 VRMS, 410V Clamping
524V25	1–93	192	Metal Oxide Varistor (MOV) 240 VRMS, 630V Clamping
524V27	1–94	192	Metal Oxide Varistor (MOV), 260V RMS, 685V Clamping
524V30	1–94	192	Metal Oxide Varistor (MOV), 280V RMS, 740V Clamping
524V42	1–94	192	Metal Oxide Varistor (MOV), 420 VRMS. 1110V Clamping
524V48	1–94	192	Metal Oxide Varistor (MOV), 480 VRMS. 1240V Clamping
525	1–50	92	R–Si, High Voltage Fast Recovery
526A	1–57	72	Multiplier, High Voltage Tripler
527A	1–63	57	R–Si, High Voltage Stick for TV
528	1–57	62	Multiplier, High Voltage Tripler
529	1–57	72	Multiplier, High Voltage Tripler
530	1–57	72	Multiplier, High Voltage Tripler
531	1–57	73	Multiplier, High Voltage Tripler
532	1–57	73	Multiplier, High Voltage Tripler
533	1–57	73	Multiplier, High Voltage Tripler
534	1–57	74	Multiplier, High Voltage Tripler
535	1–57	75	Multiplier, High Voltage Tripler
536A	1–57	76	Multiplier, High Voltage Quadrupler
537	1–57	73	Multiplier, High Voltage Tripler
538	1–57	77	Multiplier, High Voltage Tripler
539	1–57	78	Multiplier, High Voltage Tripler
541	1–63	83	R–Si, High Vltg Industrial/Microwave Oven
542	1–63	84	R–Si, High Vltg Industrial/Microwave Oven
546	1–63	85	R–Si, High Vltg Industrial/Microwave Oven
548	1–63	86	R–Si, High Vltg Industrial/Microwave Oven
549	1–57	534	R–Tripler, Si, TV High Voltage
552	1–50	92	R–Si, General Purpose, Fast Recovery
553	1–90	193	D–Si, Pin Diode, UHF Band Switch
555	1–90	102	Si, Pin Diode, UHF/VHF Detector
556	1–57	72	Multiplier, High Voltage Tripler
557	1–57	72	Multiplier, High Voltage Tripler
558	1–50	92	R–Si, High Voltage, General Purpose
559	1–57	534	R–Tripler, Si, TV High Voltage
565	1–57	180	Multiplier, High Voltage Tripler
568	1–57	423	R–High Voltage Rect/Focus Divider Network
568A	1–57	514	R–High Voltage Rect/Focus Divider Network
⇒ 576	1–50	541	R–Si, Gen Purp, Super Fast Sw
⇒ 577	1–50	541	R–Si, Gen Purp, Fast Recovery Sw
⇒ 578	1–50	92	R–Si, Gen Purp, Schottky Barrier
⇒ 579	1–50	541	R–Si, Gen Purp, Schottky Barrier
580	1–50	381	R–Si, Gen Purp, Fast Recovery
581	1–50	380	R–Si, Gen Purp, Fast Recovery
583	1–50	93	D–Si, Schottky, RF Switch
584	1–51	93	D–Si, Schottky, RF Switch
585	1–51	92	D–Si, Fast Switching Schottky Barrier
586	1–51	541	D–Si, Fast Switching Schottky Barrier
587	1–51	92	D–Si, Ultra Fast Switch
588	1–51	541	D–Si, Ultra Fast Switch
590	1–51	441a	D–Si, Dual Common Cathode, SW
591	1–51	441b	D–Si, Dual, Common Anode, SW
592	1–51	547d	D–Si, High Vltg, Gen Purp

⇒ DENOTES NEW DEVICE

NTE PRODUCT NUMERICAL INDEX

NTE Type No.	Page No.	Diag. No.	Description
594	1–51	547d	D–Si, Band Switch
595	1–51	547c	D–Si, Dual, Common Cathode, High Speed
596	1–51	547e	D–Si, Dual Common Anode, High Speed
⇒ 597	1–51	461	R–Si, Ultra Fast, 200V, 8A
⇒ 598	1–51	461	R–Si, Ultra Fast, 600V, 8A
⇒ 599	1–51	461	R–Si, Ultra Fast, 200V, 1.5A
600	1–94	91	Varistor–Si, Temp Compensating Diode
601	1–94	103	Varistor–Si, Temp Compensating Diode
605	1–94	181	Varistor–Si, Temp Compensating Diode
605A	1–94	518	Varistor–Si, Temp Compensating Diode
606	1–94	97	Varistor, Voltage Compensating Diode
607	1–94	97	Varistor, Voltage Compensating Diode
610	1–90	109	Varactor, Variable Capacitance Diode
611	1–90	109	Varactor, Variable Capacitance Diode
612	1–90	109	Varactor, Variable Capacitance Diode
613	1–90	109	Varactor, Variable Capacitance Diode
614	1–90	109	Varactor, Variable Capacitance Diode
615	1–120	91	IC–Voltage Regulator for Electronic Tuner
615P	1–120	38	IC–Voltage Regulator for Electronic Tuner (TO92 version of NTE615)
616	1–90	93	D–4 Matched Tuning Diodes
616P	1–90	519	D–4 Matched Tuning Diodes (Plastic version of NTE616)
617	1–90	394	Varactor, FM Radio Tuning Diode
618	1–90	393	Varactor, AM Radio Tuning Diode
650	1–99	194	Crystal, 1.000MHz, Parallel Resonant
651	1–99	194	Crystal, 2.000MHz, Parallel Resonant
652	1–99	195	Crystal, 5.000MHz, Parallel Resonant
653	1–99	195	Crystal, 5.000MHz, Parallel Resonant
654	1–99	195	Crystal, 10.245MHz, Parallel Resonant
655	1–99	195	Crystal, 4.0000MHz, Series Resonant
656	1–99	195	Crystal, 4.9152MHz, Series Resonant
657	1–99	195	Crystal, 6.1440MHz, Series Resonant
658	1–99	195	Crystal, 10.0000MHz, Series Resonant
659	1–99	195	Crystal, 18.0000MHz, Series Resonant
660	1–99	195	Crystal, 18.4320MHz, Series Resonant
661	1–99	195	Crystal, 20.0000MHz, Series Resonant
662	1–99	195	Crystal, 22.1184MHz, Series Resonant
700	1–123	249	IC–Linear, Chroma Subcarrier Regeneration
701	1–123	249	IC–Linear, Video Signal Processor
702	1–123	249	IC–Linear, TV Chroma Processor
701	1–123	410	RF/IF Amp, V_{CC} = 20V
702	1–123	249	TV Chroma Processor
703	1–123	410	IC–Linear, RF/IF Amp, Epoxy Pkg
704	1–123	201	IC–Linear, TV Sound IF Amp
705A	1–123	402	IC–Linear, Chroma Demodulator
708	1–123	247	IC–Linear, TV/FM Sound IF Amp
709	1–124	247	IC–Linear, TV/FM Sound IF Amp
711	1–124	201	IC–Linear, Color TV–AFT System
712	1–124	247	IC–Linear, TV/FM Sound IF, Det
713	1–124	247	IC–Linear, Chroma Demodulator
714	1–124	248	IC–Linear, Chroma Subcarrier Regeneration
715	1–124	247	IC–Linear, TV Chroma IF Amp
721	1–124	247	IC–Linear, Dual Low Noise Low Level Preamp
722	1–124	247	IC–Linear, FM Stereo Multiplex Demodulator
723	1–125	247	IC–Linear, FM Sound System
724	1–125	200	IC–Linear, Differential/Cascade Amp
725	1–125	247	IC–Linear, Dual Low Noise Preamp/ Op Amp
726	1–125	206	IC–Linear, Wide Band Amplifier
727	1–125	248	IC–Linear, Stereo Preamplifier
730	1–125	278	IC–Linear, TV Video IF System
731	1–125	248	IC–Linear, TV Video Signal Processor
734	1–125	245	IC–Linear, TV FM IF Gain Block
736	1–126	246	IC–Linear, FM IF Amp
737	1–126	247	IC–Linear, FM, IF, Amplifier/Limiter, Quad Det
738	1–126	247	IC–Linear, Chroma Processor
739	1–126	247	IC–Linear, TV Chroma Demod w/RGB Output Matrix
740A	1–126	279	IC–Linear, Audio Power Amp, 2W
742	1–126	263	IC–Linear, TV Sound Channel, 2W
743	1–126	248	IC–Linear, Phase–Locked Loop (PLL) Stereo Detector
744	1–126	247	IC–Linear, RF/IF Amp
746	1–127	245	IC–Linear, IF Amplifier
747	1–127	245	IC–Linear, Low Level Video Detector
748	1–127	247	IC–Linear, TV Sound Circuit
749	1–127	247	IC–Linear, TV Video IF Amplifier
750	1–127	247	IC–Linear, Limiting FM/IF Amplifier
754	1–127	247	IC–Linear, Single Toggle Flip–Flop
760	1–127	509	IC–Linear, FM IF Amp
778A	1–127	245	IC–Linear, Dual Op Amp
⇒ 778S	1–128	224	IC–Linear, Dual Op Amp
778SM	1–127	550	IC–Linear, Dual Op Amp
780	1–128	201	IC–Linear, TV Automatic Fine–Tuning Subsystem
783	1–128	247	IC–Linear, Automatic Fine–Tuning Detector
784	1–128	204	IC–Linear, Wide–Band Power Amp

⇒ DENOTES NEW DEVICE

NTE PRODUCT NUMERICAL INDEX

NTE Type No.	Page No.	Diag. No.	Description
787	1–128	248	IC–Linear, AM Receiver Subsystem
788	1–128	248	IC–Linear, Dual Chroma Demodulator
789	1–128	282	IC–Linear, Stereo Multiplex Decoder
790	1–128	247	IC–Linear, Dual Chroma Demodulator
791	1–129	248	IC–Linear, TV Chroma Amplifier Demodulator
793	1–129	247	IC–Linear, Vertical Countdown
797	1–129	388	IC–Linear, TV Chroma Processor
799	1–129	247	IC–Linear, Four Channel "SQ" Decoder
801	1–129	247	IC–Linear, FM Stereo Demodulator
804	1–129	279	IC–Linear, Dual, Audio Power Amp, 2W Output
806	1–129	247	IC–Linear, TV Sound Channel, 1W Output
807	1–129	263	IC–Linear, TV Sound Channel, 1W Output
809	1–130	248	IC–Linear, TV Chroma Processor
810A	1–130	279	IC–Linear, Audio Output Circuit
812	1–130	247	IC–Linear, Audio Power Amp, 1W Output
815	1–130	245	IC–Linear, TV Horizontal Processor
818	1–130	248	IC–Linear, TV Luminance Processor
821	1–130	247	IC–Linear, TV Chroma Demodulator
822	1–130	248	IC–Linear, Video/Chroma Processor
823	1–130	245	IC–Linear, Low Voltage Audio Amp, 1W Output
824	1–131	245	IC–Linear, Low Noise Dual Preamplifier
825	1–131	247	IC–Linear, Battery Operated Audio Amp, 1W Output
826	1–131	287	IC–Linear, TV Sound System, 2W Output
828	1–131	247	IC–Linear, Audio Power Amp, 1.5W Output
829	1–131	245	IC–Linear, Electronic Attenuator, 90dB @ 1kHz
832	1–131	245	IC–Linear, Tone Decoder
832SM	1–131	550	IC–Linear, Tone Decoder
834	1–131	247	IC–Linear, Low Power, Low Offset, Voltage Quad Comparator
834SM	1–131	551	IC–Linear, Quad Single Supply Comparator
835	1–131	249	IC–Linear, TV Chroma Processor
836	1–132	246	IC–Linear, TV Horizontal Processor
841	1–132	249	IC–Linear, TV Video IF Amplifier System
842	1–132	249	IC–Linear, TV Video IF Amp, Sync Sep & AGC Processor
843	1–132	249	IC–Linear, TV Video IF, PLL Sync Det
844	1–132	249	IC–Linear, Single Chip TV
845	1–132	252	IC–Linear, TV Chroma Processor/ Demod
846	1–133	287	IC–Linear, TV Video Modulator
849	1–133	247	IC–Linear, TV Horizontal/Vertical Countdown Digital Sync System
850	1–133	247	IC–Linear, Op Amp, Bandswitch
851	1–133	247	IC–Linear, VHF/UHF Prescaler
852	1–133	247	IC–Linear, Vert/Horiz Processing System Eliminates Controls
853	1–133	248	IC–Linear, Low Power, Narrow Band, FM IF System. Includes OSC, Mixer, Limit Amp, Discriminator Active Filter
855	1–133	247	IC–Linear, Color TV Video Monitor
856	1–133	246	IC–Linear, TV Video Modulator
857M	1–134	245	IC–Linear, Low Noise JFET–Input Op Amp
857SM	1–134	550	IC–Linear, Low Noise JFET Op Amp
858M	1–134	245	IC–Linear, Dual Low Noise JFET Input Op Amp
859	1–134	247	IC–Linear, Quad Low Noise JFET Input Op Amp
859SM	1–134	551	IC–Linear, Quad Low Noise JFET OP Amp
860	1–134	287	IC–Linear, High–Gain, Low–Power Narrow Band FM IF System
861	1–134	249	IC–Linear, Quad Analog Sw (4 Normally Open Switches with Disable)
862	1–134	247	IC–Linear, 5W Audio Power Amp
863	1–134	245	IC–Linear, Op Amp/Comparator
864	1–134	247	IC–Linear, Precision Waveform Generator
867	1–135	287	IC–Linear, BIMOS Input Op Amp
868	1–135	252	IC–Linear, TV Horiz/Vert Countdown Digital Sync System
869	1–135	247	IC–Linear, Dual Op Amp, High Speed, Programmable, Current Mode
871	1–135	200	IC–Linear, Wideband Op Amp
873	1–135	253	IC–Linear, Luminance/Chroma/Demod
874	1–135	253	IC–Linear, TV Horiz/Vert Countdown/Dr
875	1–136	253	IC–Linear, Video IF Amp/PLL Detector System
876	1–136	246	IC–Linear, LED Flasher/OSC
877	1–136	200	IC–Linear, Dual Low Power Op Amp
878	1–136	253	IC–Linear, Video IF Amp/PLL Detector System
⇒ 880	1–136	490	IC–Linear, TV Color Processor
887M	1–136	245	IC–Linear, Low Power JFET Op Amp
888M	1–136	245	IC–Linear, Low Power Programmable Op Amp
889M	1–137	245	IC–Linear, Low Power JFET Op Amp
900	1–137	206	Balanced Differential DC Amp, $V_{CC} = \pm 6V$
901	1–137	204	Video & Wide Band Amp, $V_{CC} = \pm 6V$
902	1–137	200	IC–Linear, Op Transconductance Amp (Gateable–Gain Block)

⇒ DENOTES NEW DEVICE

NTE Type No.	Page No.	Diag. No.	Description
903	1–137	204	IC–Linear, Operational Amplifier
904	1–137	204	IC–Linear, Gen Purp Transistor Array (Two Isolated Transistors & a Darlington Connected Pair)
905	1–137	206	IC–Linear, Diode Array (One Diode Quad & Two Isolated Diodes)
906	1–137	204	IC–Linear, Dual High Frequency Differential Amplifier
907	1–138	204	IC–Linear, Diode Array (6 Ultra Fast Low Capacitance Matched Diodes)
908	1–138	247	IC–Linear, 12V Operational Amplifier
909	1–138	200	IC–Linear, Operational Amplifier
909D	1–138	247	IC–Linear, Operational Amplifier
910	1–138	200	IC–Linear, Voltage Comparator, High Speed
910D	1–138	247	IC–Linear, Voltage Comparator, High Speed
911	1–138	206	IC–Linear, Dual Voltage Comparator
912	1–138	247	IC–Linear, Gen Purp Transistor Array (Three Isolated Transistors & One Diff Connected Transistor Pair)
914	1–139	247	IC–Linear, Zero–Voltage Switch for Thyristor Control Applications
915	1–139	206	IC–Linear, High Speed Operational Amplifier
916	1–139	248	IC–Linear, Common Emitter High Current NPN Transistor Array
917	1–139	247	IC–Linear, Dual Independent Transistor Array, Differential Amp
918	1–139	200	IC–Linear, Operational Amplifier, High Speed
918M	1–139	246	IC–Linear, Operational Amplifier, High Speed
918SM	1–139	550	IC–Linear, High Speed OP Amp
919	1–139	206	IC–Linear, High Speed Dual Comparator
919D	1–139	247	IC–Linear, High Speed Dual Comparator
921	1–140	247	IC–Linear, Dual ±15V Tracking Regulator
922	1–140	200	IC–Linear, Voltage Comparator, 8–Lead Metal Can
922M	1–140	246	IC–Linear, Voltage Comparator, 8–Lead Mini DIP
922SM	1–140	550	IC–Linear, High Performance Vltg Comparator
923	1–119	201	IC–Linear, Precision Voltage Regulator, 10–Lead Metal Can
923D	1–119	247	IC–Linear, Precision Voltage Regulator, 14–Lead DIP
924	1–140	200	IC–Linear, Voltage Follower, Op Amp, 8–Lead Metal Can
924M	1–140	246	IC–Linear, Voltage Follower, 8–Lead Mini DIP
925	1–140	200	IC–Linear, Instrumentation Op Amp, 8–Lead Metal Can
926	1–141	248	IC–Linear, Quad Timer
927	1–141	201	IC–Linear, Differential Video Amp, 10–Lead Metal Can
927D	1–141	247	IC–Linear, Differential Video Amp, 14–Lead DIP
927SM	1–141	551	IC–Linear, Differential Video Amp
928	1–141	200	IC–Linear, Low Power Dual Op Amp, 8–Lead Metal Can
928M	1–141	246	IC–Linear, Low Power, Dual Op Amp, 8–Lead Mini DIP
928S	1–141	213	IC–Linear, Dual Op Amp
928SM	1–141	550	IC–Linear, Dual Low Power Op Amp
929	1–141	248	IC–Linear, Gen Purp, High Current, NPN Transistor Array
930	1–141	200	IC–Linear, BiMOS Op Amp, 8–Lead Metal Can
931	1–118	1c	IC–Vltg Reg, Pos, 5V, 3A
932	1–118	1c	IC–Vltg Reg, Pos, 5V, 5A
933	1–118	1c	IC–Vltg Reg, Pos, 12V, 5A
934	1–118	1c	IC–Vltg Reg, Pos, 13.8V, 5A
935	1–142	1b	IC–Vltg Reg, Pos Adj., 1.2V to 32V, 5A
937	1–142	200	IC–Linear, JFET Input Op Amp, 8–Lead Metal Can
937M	1–142	245	IC–Linear, JFET Input Op Amp, 8–Lead Mini DIP
938	1–142	200	IC–Linear, Precision Op Amp, 8–Lead Metal Can
938M	1–142	246	IC–Linear, Precision Op Amp, 8–Lead Mini DIP
940	1–142	200	IC–Linear, FET Input Op Amp, 8–Lead Metal Can
941	1–143	200	IC–Linear, Frequency Compensated Op Amp, 8–Lead Metal Can
941D	1–143	247	IC–Linear, Frequency Compensated Op Amp, 14–Lead DIP
941M	1–143	246	IC–Linear, Freq Comp Op Amp, 8–Lead Mini DIP
941S	1–143	214	IC–Linear, Freq Comp Op Amp, 7–Lead SIP
941SM	1–143	550	IC–Linear, Freq Comp Op Amp, SOIC–8
942	1–143	247	IC–Linear, Low Noise Dual Preamplifier
943	1–143	200	IC–Linear, Low Power, Low Offset, Dual Vltg Comp, 8–Lead Metal Can
943M	1–143	245	IC–Linear, Low Power, Low Offset, Dual Vltg Comp, 8–Lead Mini DIP
943SM	1–143	550	IC–Linear, Low Power, Low Offset, Dual Vltg Comp, SOIC–8
944	1–143	200	IC–Linear, Programmable Op Amp, 8–Lead Metal Can

⇒ DENOTES NEW DEVICE

NTE PRODUCT NUMERICAL INDEX

NTE Type No.	Page No.	Diag. No.	Description
944M	–	245	IC–Linear, Programmable Op Amp, 8–Lead Mini DIP
945	1–144	200	IC–Linear, Op Amp
947	1–144	206	IC–Linear, Dual Op Amp, 10–Lead Metal Can
947D	1–144	247	IC–Linear, Dual Op Amp, 14–Lead DIP
948	1–144	247	IC–Linear, Quad Op Amp, 14–Lead DIP
948SM	1–144	551	IC–Linear, Quad Op Amp, SOIC–14
949	1–144	200	IC–Linear, Dual Audio Op Amp/Preamp
950	1–118	9e	IC–Vltg Reg, Pos, 12V, 100mA
951	1–118	9e	IC–Vltg Reg, Pos, 15V, 100mA
952	1–144	9r	IC–Linear, Precision 2.5V Shunt
953	1–118	308a	IC–Vltg Reg, Pos Adj., 4–Terminal, 7.5V to 40V, 1A
954	1–119	308b	IC–Vltg Reg, Neg Adj., 4–Terminal, –2.2V to –30V, 1A
955M	1–145	245	IC–Linear, Monolithic Timer, 8–Lead Mini DIP
955MC	1–145	246	IC–Linear, CMOS Timer, 8–Lead Mini DIP
955S	1–145	224	IC–Linear, Monolithic Timer, 8–Lead SIP
955SM	1–145	550	IC–Linear, Monolithic Timer, SOIC–8
956	1–118	11h	IC–Vltg Reg, Pos Adj., 1.2V to 37V, 1.5A
957	1–119	11i	IC–Vltg Reg, Neg Adj., –1.2V to –37V, 1.5A
958	1–118	11f	IC–Vltg Reg, Pos, 18V, 1A
959	1–119	11g	IC–Vltg Reg, Neg, –18V, 1A
960	1–118	11f	IC–Vltg Reg, Pos, 5V, 1A
961	1–119	11g	IC–Vltg Reg, Neg, –5V, 1A
962	1–118	11f	IC–Vltg Reg, Pos, 6V, 1A
963	1–118	11g	IC–Vltg Reg, Neg, –6V, 1A
964	1–118	11f	IC–Vltg Reg, Pos, 8V, 1A
965	1–119	11g	IC–Vltg Reg, Neg, –8V, 1A
966	1–118	11f	IC–Vltg Reg, Pos, 12V, 1A
967	1–119	11g	IC–Vltg Reg, Neg, –12V, 1A
968	1–118	11f	IC–Vltg Reg, Pos, 15V, 1A
969	1–119	11g	IC–Vltg Reg, Pos, –15V, 1A
970	1–118	1b	IC–Vltg Reg, Pos Adj., 1.2V to 33V, 3A
971	1–119	11g	IC–Vltg Reg, Neg, –24V, 1A
972	1–118	11f	IC–Vltg Reg, Pos, 24V, 1A
973	1–146	206	IC–Linear, Double Balanced Mod/Demod, 10–Lead Metal Can
973D	1–146	247	IC–Linear, Double Balanced Mod/Demod, 14–Lead DIP
974	1–146	247	IC–Linear, Phase/Freq Detector
975	1–146	245	IC–Linear, Gen Purp Op Amp, 8–Lead Mini DIP
⇒ 975SM	1–146	550	IC–Linear, Gen Purp Op Amp, SOIC–8
976	1–146	246	IC–Linear, Op Amp, 8–Lead Mini DIP
977	1–118	9e	IC–Vltg Reg, Pos, 5V, 100mA
978	1–146	247	IC–Linear, Dual Timer, 14–Lead DIP
978C	1–146	247	IC–Linear, CMOS Dual Timer, 14–Lead DIP
978SM	1–146	551	IC–Linear, Dual Timer, SOIC–14
980	1–146	248	IC–Linear, CMOS Micropower Phase–Locked Loop (PLL)
981	1–118	9l	IC–Vltg Reg, Pos, 8V, 100mA
982	1–146	248	IC–Linear, TV Chroma System
983	1–147	247	IC–Linear, Low Noise Dual Preamp
984	1–147	248	IC–Linear, Television Video IF System
985	1–147	248	IC–Linear, TV Luminance Processor
986	1–147	252	IC–Linear, Single Chip TV Chroma Processor/Demodulator
987	1–147	247	IC–Linear, Quad Low Power Op Amp, 14–Lead DIP
987SM	1–147	551	IC–Linear, Quad Low Power Op Amp, SOIC–14
988	1–118	91	IC–Vltg Reg, Pos, 6.2V, 100mA
989	1–147	247	IC–Linear, General Purpose Phase Locked Loop (PLL)
990	1–147	247	IC–Linear, Dual Power Audio Amplifier
991	1–148	249	IC–Linear, CB Phase Lock Loop (PLL), Frequency Synthesizer
992	1–148	247	IC–Linear, Quad, Dual Input, Internally Compensated Amplifiers
993	1–148	248	IC–Linear, CB Prescaler
994M	1–148	246	IC–Linear, Voltage Controlled Oscillator, 8–Lead Mini DIP
995	1–148	247	IC–Linear, Freq to Vltg Converter, 14–Lead DIP
995M	1–148	246	IC–Linear, Freq to Vltg Converter, 8–Lead Mini DIP
996	1–148	246	IC–Linear, Operational Transconductance Amplifier (OTA)
997	1–148	247	IC–Linear, Quad Op Amp
⇒ 998	1–149	471	IC–1.22V Reference Diode
⇒ 999M	1–149	246	IC–Programmable Precision Reference Output to 36V
⇒ 999SM	1–149	550	IC–Programmable Precision Reference Output to 36V
1002	1–149	200	IC–Linear, FM IF, TV Amp

⇒ DENOTES NEW DEVICE

NTE PRODUCT NUMERICAL INDEX

NTE Type No.	Page No.	Diag. No.	Description
1003	1–149	247	IC–Linear, FM/AM IF Amp
1004	1–149	250	IC–Linear, AFT System for TV
1005	1–149	247	IC–Linear, FM Stereo Demodulator
1006	1–149	247	IC–Linear, FM Stereo Demodulator
1009	1–150	257	IC–Linear, Audio Amp, 1W
1010	1–150	257	IC–Linear, Audio Amp, 2W
1012	1–150	283	Module, Hybrid 27MHz OSC AM IF
1013	1–150	210	Module, Hybrid AM IF Amp
1014	1–150	391	Module, Hybrid, RF Amp/OSC
1015	1–150	209	Module, Hybrid, AF Preamp
1016	1–150	210	Module, Hybrid, AF Small Signal Amp for Tape Recorder
1019	1–150	210	Module, Hybrid, Low Noise Equalizer Amp
1022	1–151	249	IC–Linear, 4 Channel Stereo Decoder
1023	1–151	259	IC–Linear, Audio Power Output, 4W
1024	1–151	229	Module, Hybrid, Audio Power Amp, 10W Min.
1027	1–151	229	Module, Hybrid, Audio Power Amp, 10W Min.
1028	1–151	225	Module, Hybrid, Audio Power Amp, 20W Min, Dual Power Supply Req'd
1029	1–151	274	IC–Linear, Audio Power Amp, 3.5W
1031	1–151	258	IC–Linear, Audio Power Amp, 0.5W
1032	1–151	258	IC–Linear, Audio Power Amp, 1W
1033	1–152	258	IC–Linear, Audio Power Amp, 1W, with Input & Output Transistors
1035	1–152	258	IC–Linear, Audio Power Amp, 1W
1036	1–152	258	IC–Linear, Audio Power Amp, 0.7W
1038	1–152	273	IC–Linear, Audio Power Amp, 3.5W, Pins Upward
1039	1–152	246	IC–Linear, FM/IF Amp
1040	1–152	207	IC–Linear, FM/IF Amp
1041	1–152	246	IC–Linear, IF Amp
1042	1–152	246	IC–Linear, 3 Stage FM/IF Amp
1043	1–152	247	IC–Linear, Audio Amp for Tape Recorder
1045	1–153	247	IC–Linear, FM, TV Sound IF Amp, FM Detector
1046	1–153	247	IC–Linear, TV Tuner AFC
1047	1–153	247	IC–Linear, TV Sound IF/FM, Det/AF Preamp
1049	1–153	249	IC–Linear, AM Tuner with RF Amp
1050	1–153	269	IC–Linear, Color TV Chroma Demod
1052	1–153	208	IC–Linear, Low Noise PreAmp
1053	1–153	202	IC–Linear, AF High Gain PreAmp
1054	1–153	247	IC–Linear, FM/AM IF Amp
1055	1–153	247	IC–Linear, FM/AM IF Amp
1056	1–154	247	IC–Linear, FM Stereo Multiplex Demodulator
1057	1–154	247	IC–Linear, FM–IF Amp, AF PreAmp
1058	1–154	212	IC–Linear, Audio Power Amp, 4.4W
1060	1–154	248	IC–Linear, AM–RF Amp, Mix/OSC, FM–AM IF Amp
1061	1–154	247	IC–Linear, TV AFT Circuit
1062	1–154	247	IC–Linear, Color TV Demodulator
1064	1–154	248	IC–Linear, TV Video Signal Processor
1072	1–154	248	IC–Linear, FM–AM IF Amp & AF Amp
1073	1–155	248	IC–Linear, AM–RF Amp, Mix, OSC, FM–AM IF Amp
1075A	1–155	269	IC–Linear, Audio Power Amp, 1W
1079	1–155	247	IC–Linear, Vertical OSC, Driver
1080	1–155	247	IC–Linear, TV Video Processor
1081A	1–155	235	IC–Linear, Audio Power Amp, 4.8W
1082	1–155	208	IC–Linear, FM–IF Amp
1083	1–155	241	Module, Hybrid, Dual High Gain PreAmp
1085	1–155	214	IC–Linear, Low Noise Audio PreAmp
1087	1–156	214	IC–Linear, Low Noise PreAmp
1089	1–156	254	IC–Linear, TV Color Processor
1090	1–156	225	IC–Linear, Audio Power Amp, 25W, Dual Power Supply Required
1091	1–156	249	IC–Linear, 1st Video Amp, AGC, Color Take–Offs
1092	1–156	208	IC–Linear, RF–IF Amp
1093	1–156	269	IC–Linear, High Gain Audio Amp, 1W
1094	1–156	247	IC–Linear, Color TV Chroma Amp
1096	1–156	268	IC–Linear, High Frequency Wide–Band Amplifier/Phase Detector
1097	1–157	498	IC–Linear, Audio Power Amp, 1W
1098	1–157	198	IC–Linear, Audio Power Amp, 5W
1099	1–157	247	IC–Linear, Chroma Demodulator
1100	1–157	214	IC–Linear, TV Sound IF Amp, FM IF Amp
1101	1–157	214	IC–Linear, Gen Purp Amp, Mixer OSC
1102	1–157	203	IC–Linear, 3 Stage Audio Amp
1103	1–157	214	IC–Linear, Gen Purp, Low Noise Pre–Amp
1104	1–157	203	IC–Linear, Wide & Narrow Band Amp, FM/IF Limiter
1106	1–157	249	IC–Linear, FM Stereo Demod
1107	1–157	259	IC–Linear, Audio Power Amp, 4.8W
1108	—	247	IC–Linear, AM–FM IF Amp
1109	1–158	247	AM/FM IF Amp/Det/AF/Amp
1110	1–158	265	IC–Linear, Audio Power Amp, 2W
1112	1–158	247	IC–Linear, Audio Power Amp, 4W
1115	1–158	262	IC–Linear, Audio Power Amp, 7W, w/Heat Sink Tabs
1115A	1–158	261	IC–Linear, Audio Power Amp, 7W, w/Heat Sink Tabs Bent Down

⇒ DENOTES NEW DEVICE

NTE PRODUCT NUMERICAL INDEX

NTE Type No.	Page No.	Diag. No.	Description
1116	1–158	261	IC–Linear, Audio Power Amp, 5W
1117	1–158	247	IC–Linear, Audio Power Amp, 2W
1119	1–158	218	Module, Hybrid, 2 Stage Audio Amp
1120	1–159	218	Module, Hybrid, Audio Driver
1121	1–159	248	IC–Linear, Color TV Subcarrier, Regenerator
1122	1–159	247	IC–Linear, Color TV Chroma Demodulator
1123	1–159	248	IC–Linear, Color TV Subcarrier Processing Ckt
1124	1–159	249	IC–Linear, AM/FM IF Amplifier
1126	1–159	498	IC–Linear, Audio Power Amp, 1W
1127	1–159	235	IC–Linear, Audio Power Amp, 4.8W
1128	1–159	214	IC–Linear, TV Video IF Amp
1130	1–160	249	IC–Linear, Color TV Demodulator
1133	1–160	249	IC–Linear, TV Video IF System
1135	1–160	217	IC–Linear, High Gain Audio PreAmp
1137	1–160	202	IC–Linear, Audio Power Amp, 1.3W
1139	1–160	226	Module, Hybrid, Audio Power Amp,13W
1140	1–160	264	IC–Linear, Audio Power Amp, 2W
1141	1–160	264	IC–Linear, Audio Power Amp, 1.5W
1142	1–161	247	IC–Linear, FM Multiplex Stereo Decoder
1149	1–161	250	IC–Linear, FM Tuning System
1151	1–161	–	IC–Linear, Audio Module
1152	1–161	211	Module, Hybrid, AF PreAmp
1154	1–161	260	IC–Linear, Audio Power Amp, 2W/Ch
1155	1–161	239	IC–Linear, Audio Power Amp, 5.8W, for Car Radio
1156	1–161	265	IC–Linear, Audio Power Amp, 2W
1158	1–161	248	IC–Linear, Sound IF Amp, Limiter, FM Det
1160	1–162	235	IC–Linear, Audio Power Amp, 5.2W
1161	1–162	253	IC–Linear, TV Video, Sound IF
1164	1–162	248	IC–Linear, Video Jungle Circuit
1165	1–162	240	IC–Linear, Audio Power Amp, 4.5W, for Car Radio
1166	1–162	240	Module, Hybrid, Audio Output, 5.8W, for Car Radio & CB
1167	1–162	248	IC–Linear, Phase Locked Loop (PLL)
1170	1–162	219	IC–Linear, Dual PreAmp for Car Radio
1171	1–163	200	IC–Linear, Op Amp
1172	1–163	247	IC–Linear, Phase–Frequency Detector
1174	1–163	251	IC–Linear, TV AFT Circuit
1176	1–163	248	IC–Linear, TV Chroma Demod
1177	1–163	247	IC–Linear, TV Luminance Processor
1179	1–163	246	IC–Linear, PreAmp with ALC Transistor
1180	1–163	271	IC–Linear, Audio Power Amp, 1.0W
1181	1–163	248	IC–Linear, FM Stereo Multiplex Demodulator
1184	1–164	248	IC–Linear, PreAmp for Tape Recorder
1185	1–164	235	IC–Linear, Audio PreAmp, 3.5W
1187	1–164	246	IC–Linear, TV Video IF Detector
1188	1–164	206	IC–Linear, TV Video IF Detector
1192	1–164	213	IC–Linear, VCO for Phase Locked Loop (PLL)
1195	1–164	208	IC–Linear, Low Noise, High Gain, PreAmp
1197	1–164	213	IC–Linear, Oscillator & 12 Stage Divider
1198	1–165	252	IC–Linear, CMOS Frequency Divider
1199	1–165	252	IC–Linear, CMOS Frequency Divider
1200	1–165	249	IC–Linear, Color TV Chroma Processor
1201	1–165	221	Module, Hybrid, CB VCO
1202	1–165	221	Module, Hybrid, CB VCO
1203	1–165	221	Module, Hybrid, CB VCO
1206	1–165	250	IC–Linear, Phase Locked Loop (PLL) Stereo Decoder
1209	1–165	246	IC–Linear, 4–Bit Binary Counter
1210	1–166	223	IC–Linear, PreAmp with ALC
1211	1–166	237	IC–Linear, Audio Power Amp, 5.5W
1213	1–166	250	IC–Linear, TV Video IF Amp
1214	1–166	248	IC–Linear, AM Tuner System
1215	1–166	248	IC–Linear, Stereo Equalizer Amp
1216	1–166	248	IC–Linear, Chroma Circuit for NTSC
1217	1–166	248	IC–Linear, Phase Locked Loop (PLL) FM Multiplex Stereo Demodulator
1218	1–166	228	Module, Hybrid, Dual Audio Power Amp, 7W/Ch
1219	1–167	227	Module, Hybrid, Dual Audio Power Amp, 15W/Ch
1221	1–167	247	IC–Linear, Stereo PreAmp
1223	1–167	215	IC–Linear, Low Noise PreAmp
1224	1–167	202	IC–Linear, Audio Power Amp, 1.2W
1226	1–167	247	IC–Linear, FM Multiplex Stereo Demodulator
1227	1–167	246	IC–Linear, FM IF Amp
1228	1–167	271	IC–Linear, Audio Power Amp, 2.1W
1230	1–168	248	IC–Linear, FM Multiplex Stereo Demodulator
1231	1–168	261	IC–Linear, Complete TV Sound Channel
1231A	1–168	248	IC–Linear, Complete TV Sound Channel
1232	1–168	205	IC–Linear, Audio Power Amp, 8W, for Car Radio
1233	1–168	248	IC–Linear, CB Phase Locked Loop (PLL) Frequency Synthesizer
1234	1–168	214	IC–Linear, FM IF Amp
1235	1–168	214	IC–Linear, Squelch Amp
1236	1–168	247	IC–Linear, TV Sound IF System

⇒ DENOTES NEW DEVICE

NTE PRODUCT NUMERICAL INDEX

NTE Type No.	Page No.	Diag. No.	Description
1237	1–169	250	IC–Linear, AM Radio without Audio Stage
1239	1–169	243	IC–Linear, Audio Output
1240	1–169	222	IC–Linear, Audio Output
1241	1–169	217	IC–Linear, Heat Coil & Meter Driver
1242	1–169	248	IC–Linear, FM–AM IF Amp, AM Converter
1243	1–169	250	IC–Linear, FM Multiplex Stereo Decoder
1245	1–169	235	IC–Linear, Vert Deflection for B/W & Small Color TV
1246	1–169	269	IC–Linear, TV Sound IF, Audio Output, 2.4W
1247	1–170	221	Module, Hybrid, CB VCO
1248	1–170	249	IC–Linear, Phase–Locked Loop (PLL) FM Multiplex Stereo Demod
1249	1–170	215	IC–Linear, Balance Modulator
1250	1–170	248	IC–Linear, AFT Circuit
1254	1–170	252	IC–Linear, Phase–Locked Loop (PLL) Frequency Synthesizer for CB
1257	1–170	269	IC–Linear, FM IF Detector
1258	1–170	286	IC–Linear, Vert Hold, OSC., Output
1262	1–171	221	IC–Linear, VCO for CB
1263	1–171	249	IC–Linear, Rec/PB Ckt for VCR
1264	1–171	248	IC–Linear, Video AGC Ckt
1265	1–171	256	IC–Linear, Noise Suppressor Ckt
1266	1–171	248	IC–Linear, Color AGC Ckt
1267	1–171	248	IC–Linear, Dropout Compensation Ckt
1268	1–172	253	IC–Linear, DC Servo Ckt
1269	1–172	253	IC–Linear, Color Signal Processing Ckt
1271	1–172	236	IC–Linear, Control Voltage Generator
1273	1–172	255	IC–Linear, Dual Audio Power
1278	1–172	239	IC–Linear, Audio Power Amp, 5.8W
1281	1–172	285	Module, Hybrid, Audio Power Amp, 50W, 2 Power Supplies Required
1282	1–172	285	Module, Hybrid, Audio Power Amp, 35W, 2 Power Supplies Required
1285	1–173	277	IC–Linear, Audio Power Amp, 5.8W
1287	1–173	251	IC–Linear, Audio Power Amp, 20W, Includes Thermal Shutdown
1288	1–173	205	IC–Linear, Audio Power Amp, 10W, for Car Radio
1289	1–173	261	IC–Linear, TV Vertical Deflection System
1290	1–173	248	IC–Linear, AM Tuner for Car Radio
1292	1–173	247	IC–Linear, IF Amplifier with Detector
1293	1–173	289	IC–Linear, Dual Audio Power, 5.8W/Ch
1294	1–173	246	IC–Linear, Audio Power Output, 2W
1295	1–174	287	IC–Linear, TV Signal Processor
1296	1–174	315	IC–Linear, TV Chroma Processor/Demod
1297	1–174	337	IC–Linear, TV Color Signal Processor/Demod
1298	1–174	248	IC–Linear, TV Signal Processor
1299	1–174	252	IC–Linear, TV Signal Processor
1300	1–174	224	IC–Linear, TV Remote Control
1301	1–174	220	IC–Linear, AM/FM IF
1303	1–175	267	IC–Linear, AF Power Output
1304	1–175	272	IC–Linear, Chroma Processor
1306	1–175	272	IC–Linear, Video IF
1308	1–175	250	IC–Linear, TV Sound IF, Det
1309	1–175	216	IC–Linear, FM IF
1311	1–175	270	IC–Linear, Vert OSC., Amp
1312	1–175	247	IC–Linear, Vert OsSC, Amp
⇒ 1315	1–176	493	Module, Dual AF PO, 35W
⇒ 1316	1–176	493	Module, Dual AF PO, 50W
⇒ 1317	1–176	546	Module, Dual AF PO, 50W
1320	1–176	229	Module, Hybrid, Audio Power Amp, 25W, 2 Power Supplies Required
1322	1–176	290	Module, Hybrid, Audio Power Amp, 80W, 2 Power Supplies Required
1323	1–176	229	Module, Hybrid, Audio Power Amp, 15W
1326	1–176	225	Module, Hybrid, Audio Power Amp, 24W, 2 Power Supplies Required
1327	1–176	225	Module, Hybrid, Audio Power Amp, 35W, 2 Power Supplies Required
1328	1–176	225	Module, Hybrid, Audio Power Amp, 50W, 2 Power Supplies Required
1329	1–177	227	Module, Hybrid, Audio Power Amp, 20W/Ch, 2 Power Supplies Required
1330	1–177	232	Module, Hybrid, Audio Power Amp, 15W/Ch, 2 Power Supplies Required
1331	1–177	232	Module, Hybrid, Audio Power Amp, 25W/Ch, 2 Power Supplies Required
1333	1–177	229	Module, Hybrid, Audio Power Amp, 40W, 2 Power Supplies Required
1335	1–177	290	Module, Hybrid, Audio Power Amp, 80W, 2 Power Supplies Required
1337	1–177	225	Module, Hybrid, Audio Power Amp, 70W, 2 Power Supplies Required
1338	1–177	292	Module, Hybrid, Voltage Amp for 40W to 50W Audio Power Amp
1339	1–177	292	Module, Hybrid, Voltage Amp for 80W to 90W Audio Power Amp
1340	1–177	225	Module, Hybrid, Audio Power Amp, 24W, 2 Power Supplies Required
1341	1–178	225	Module, Hybrid, Audio Power Amp, 15W, 2 Power Supplies Required
1343	1–178	228	Module, Hybrid, Dual Audio Power, 10W/Ch
1344	1–178	227	Module, Hybrid, Dual Audio Power, 25W/Ch
1345	1–178	232	Module, Hybrid, Audio Power Amp, 30W, 2 Power Supplies Required

⇒ DENOTES NEW DEVICE

NTE Type No.	Page No.	Diag. No.	Description
1346	1–178	290	Module, Hybrid, Audio Power Amp, 60W, 2 Power Supplies Required
1347	1–178	232	Module, Hybrid, Dual Audio Power, 20W/Ch, 2 Power Supplies Required
1356	1–179	232	IC–Linear, 2–Channel Darlington Pwr Pack
1358	1–179	285	Module, AF Pwr Amp, 50W
1359	1–179	238	IC–Linear, 2–Channel 22W Min AF Pwr Amp
1361	1–179	311	IC–Linear, Audio Power Amp, 12W BTL
1362	1–179	311	IC–Linear, Audio PO 5.5W
1363	1–179	312	IC–Linear, Audio Power Amp, 4.2W
1364	1–179	288	IC–Linear, Dual Power Supply, AF PO, 5.5W/Ch
1365	1–179	312	IC–Linear, Audio Power Amp, 5W
1367	1–179	256	IC–Linear, Audio Power, 2.3W, (4.6W BTL)
1368	1–180	289	IC–Linear, Dual Audio Power, 5.8W/Ch
1369	1–180	222	IC–Linear, Audio Power Amp, 5.5W
1370	1–180	239	IC–Linear, Audio Power Amp, 5.8W for Car Radio
1371	1–180	319	IC–Linear, Dual Audio Power, 5.3W/Ch
1372	1–180	255	IC–Linear, Dual Audio Power, 3.9W/Ch (12W BTL)
1373	1–180	319	IC–Linear, Dual Audio Power, 7.5W
1374	1–180	205	IC–Linear, Audio Power Amp, 12W
1375	1–180	240	IC–Linear, Audio Power Amp, 5.8W for Car Radio
1376	1–180	205	IC–Linear, Audio Power Amp, 22W
1377	1–181	320	IC–Linear, Dual Audio Power, 6W/Ch (19W BTL)
1378	1–181	205	IC–Linear, Audio Power Amp, 10W
1380	1–181	205	IC–Linear, Audio Power Amp, 14W
1381	1–181	334	IC–Linear, Audio Power Amp, 2.1W
1382	1–181	321	IC–Linear, Audio Power Amp, 2.4W (7.7W BTL)
1383	1–181	256	IC–Linear, Dual Audio Power, 2.4W/Ch (7W BTL)
1384	1–181	237	IC–Linear, Audio Power Amp, 3.5W
1387	1–181	239	IC–Linear, Dual Audio Power, 2.4W/Ch
1388	1–182	237	IC–Linear, Audio Power Amp, 5.8W
1389	1–182	289	IC–Linear, Dual Audio Power, 20W
1390	1–182	322	IC–Linear, Audio Power Amp, 12W (Reverse Pinout of NTE1391)
1391	1–182	322	IC–Linear, Audio Power Amp, 12W (Reverse Pinout of NTE1390)
1392	1–182	243	IC–Linear, Audio Power Amp, 7W (Reverse Pinout of NTE1393)
1393	1–182	242	IC–Linear, Audio Power Amp, 7W (Reverse Pinout of NTE1392)
1394	1–182	323	IC–Linear, Dual Audio Power, 5.8W/Ch (17W BTL)
1395	1–182	349	IC–Linear, Dual Audio Power, 5.8W
1396	1–182	310	IC–Linear, Bridge Booster, 20W, for Car Radio
1398	1–183	349	IC–Linear, Dual AF PO, 5.8W
1399	1–183	349	IC–Linear, AF PO, 18W
1400	1–183	247	IC–Linear, FM Limiter
1401	1–183	248	IC–Linear, TV Sync Sep, Ped Clamp
1402	1–183	252	IC–Linear, Electronic Channel Selector
1403	1–183	248	IC–Linear, TV Sync Sep, Horiz OSC
1404	1–183	348	IC–Linear, Sound IF Amp, Det
1406	1–183	222	IC–Linear, Vert Defl Output
1408	1–184	249	IC–Linear, VCR Color Signal Processor
1409	1–184	252	IC–Linear, Electronic Channel Selector
1409N	1–184	459	IC–Linear, Electronic Channel Selector
1410	1–184	253	IC–Linear, Chroma Video Signal Processor
1412	1–184	252	IC–Linear, Recording Video Signal Processor
1413	1–184	248	IC–Linear, Video IF, AGC Amp
1414	1–184	299	IC–Linear, Digital AC Clock Timer
1415	1–185	247	IC–Linear, Color Compensation Circuit
1416	1–185	253	IC–Linear, Chroma, Video Signal Processor
1417	1–185	252	IC–Linear, Deflection Signal Processor
1418	1–185	250	IC–Linear, TV Sound IF Amp
1419	1–185	247	IC–Linear, Head Amp Circuit for VCR
1422	1–185	314	IC–Linear, Playback Video Signal Processor
1423	1–186	236	IC–Linear, Audio Power Amp, 5.7W (Reverse Pinout of NTE1424)
1424	1–186	313	IC–Linear, Audio Power Amp, 5.7W (Reverse Pinout of NTE1423)
1425	1–186	248	IC–Linear, Capstan Servo Control Circuit
1427	1–186	215	IC–Linear, Reference Frequency Divider
1428	1–186	253	IC–Linear, Cylinder Servo Control Circuit
1429	1–186	205	IC–Linear, Vertical Output
1430	1–186	337	IC–Linear, TV Video IF Amp
1431	1–187	217	IC–Linear, Audio Driver
1432	1–187	247	IC–Linear, FM Noise Canceller
1433	1–187	217	IC–Linear, Audio PreAmp
1434	1–187	306	IC–Linear, Voltage Comparator
1435	1–187	326	IC–Linear, Dual Audio PreAmp
1436	1–187	247	IC–Linear, FM IF Amp
1437	1–187	252	IC–Linear, VIR Signal Processor
1438	1–187	325	IC–Linear, Audio Tape Program Selector
1439	1–188	247	IC–Linear, Dual Attenuator, G_V=17dB

⇒ DENOTES NEW DEVICE

NTE PRODUCT NUMERICAL INDEX

NTE Type No.	Page No.	Diag. No.	Description
1440	1–188	253	IC–Linear, Video IF Amp, Detector, AGC
1441	1–188	248	IC–Linear, FM IF System
1442	1–188	247	IC–Linear, Balance Modulator
1443	1–188	247	IC–Linear, Sound IF Amp
1446	1–188	249	IC–Linear, Servo Control for VCR
1447	1–189	248	IC Linear, FM Noise Canceller
1448	1–189	326	IC–Linear, FM if Amplifier
1449	1–189	328	IC–Linear, Low Noise Equalizer Amp
1450	1–189	327	IC–Linear, Audio Power Amp, 5W
1451	1–189	247	IC–Linear, 2 Channel Low Noise Equalizer Amp
1452	1–189	215	IC–Linear, Audio Power Amp, 1W
1453	1–189	247	IC–Linear, 2 Channel Low Noise Equalizer Amp
1455	1–189	247	IC–Linear, 2 Channel Low Noise Equalizer Amp
1457	1–189	328	IC–Linear, Low Noise Equalizer Amp
1458	1–189	224	IC–Linear, Dual Audio Pre–Amp
1459	1–189	328	IC–Linear, Low Noise Equalizer Amp for Car
1460	1–189	248	IC–Linear, Stereo Demod with Phase–Locked Loop (PLL)
1461	1–190	332	IC–Linear, Phase–Locked Loop (PLL) FM Stereo Demod
1463	1–190	271	IC–Linear, AF Power Amp for Tape Recorder
1465	1–190	329	IC–Linear, Audio Power Amp, 0.5W
1466	1–190	213	IC–Linear, PreAmp w/ALC Transistors
1467	1–190	224	IC–Linear, Audio Power Amp, 0.5W
1468	1–190	214	IC–Linear, Audio Low Power Out Amp
1469	1–190	252	IC–Linear, Video IF and AFT
1470	1–190	271	Audio Power Amp, 2.5W, for Table Top Stereo, V_{CC} = 14V
1471	1–191	315	IC–Linear, Sync Sep, Horiz OSC/Driver, Vert OSC/Drive
1472	1–191	271	IC–Linear, Audio Power Amp, 1W, for Tape Recorder
1473	1–191	253	IC–Linear, Color & Video Signal Processor
1474	1–191	214	IC–Linear, FM IF Amplifier
1475	1–191	254	IC–CMOS, Phase–Locked Loop (PLL) Frequency Synthesizer for CB
1476	1–191	239	IC–Linear, Audio Power Amp, 1.4W
1477	1–192	271	IC–Linear, 2 Ch Amp for Headphone
1478	1–192	307	IC–Linear, Solenoid Driver & Signal Sensing Circuit
1480	1–192	247	IC–Linear, 2–Channel Audio Preamp
1481	1–192	271	IC–Linear, Dual Recording Output Amplifiers
1482	1–192	249	IC–Linear, Phase–Locked Loop (PLL) FM Stereo Demod with Pilot Cancel
1483	1–192	337	IC–Linear, Video IF System
1484	1–193	248	IC–Linear, Phase–Locked Loop (PLL) FM Stereo Demod
1485	1–193	222	IC–Linear, Vertical Deflection Output Ckt
1486	1–193	315	IC–Linear, FM/AM Tuner System
1487	1–193	247	IC–Linear, AM RF Converter, IF Amp
1488	1–193	248	IC–Linear, AM–IF Amp, Demod with Muting, Center Mtr & Signal Mtr
1489	1–193	248	IC–Linear, Stereo Demodulator
1490	1–193	248	IC–Linear, FM/AM Tuner for Portable Radio
1491	1–193	247	IC–Linear, AM–FM IF Amp
1492	1–194	248	IC–Linear, TV Video IF Amp
1493	1–194	330	IC–Linear, FM Stereo Demodulator
1495	1–194	330	IC–Linear, AM RF Mixer, IF Amp
1496	1–194	248	IC–Linear, Vert/Horiz OSC & X–Ray Ckt
1497	1–194	208	IC–Linear, Audio Pre–Amp w/ALC
1498	1–194	213	IC–Linear, Dual Peak Power Meter Driver
1499	1–194	213	IC–Linear, 1/20 Frequency Divider
1500	1–195	348	IC–Linear, 7–Step LED Driver Circuit for Logarithmic Response
1501	1–195	348	IC–Linear, 7–Step LED Driver Circuit for Linear Response
1502	1–195	326	IC–Linear, 5–Step LED Driver Circuit for Linear Response
1503	1–195	326	IC–Linear, 5–Step LED Driver Circuit for Logarithmic Response
1508	1–195	287	IC–Linear, 10–Step Dot/Bar Display Driver Linear Scale
1509	1–195	287	IC–Linear, 10–Step Dot/Bar Display Driver Logarithmic Scale
1510	1–195	224	IC–Linear, 5–Step LED Driver, Linear Scale
1511	1–195	271	IC–Linear, 5–Step LED Driver, Linear Scale
1512	1–196	271	IC–Linear, 5–Step LED Driver, Logarithmic Scale
1513	1–196	248	IC–Linear, 9–Step LED Driver, Logarithmic Scale
1514	1–196	248	IC–Linear, 5–Step LED Driver, Logarithmic Scale
1515	1–196	248	IC–Linear, 5–Step LED Driver, Logarithmic Scale
1516	1–196	316	IC–Linear, Audio Power Amp, 1.8W
1517	1–196	331	IC–Linear, Dual Audio PreAmp w/ALC
1518	1–196	385	IC–Linear, AM RF/IF Det AGC
1519	1–197	248	IC–Linear, 10–Step LED Driver, Linear Scale
1520	1–197	252	IC–Linear, Electronic Channel Selector

⇒ DENOTES NEW DEVICE

NTE PRODUCT NUMERICAL INDEX

NTE Type No.	Page No.	Diag. No.	Description
1521	1–197	213	IC–Linear, TV Sound IF Amp & Detector
1522	1–197	269	IC–Linear, B/W Video IF
1523	1–197	213	IC–Linear, Dual Low Noise PreAmp
1525	1–197	213	IC–Linear, 3–Stage Differential IF Amp
1527	1–197	315	IC–Linear, FM, IF Amp AFC & Meter Driver
1529	1–197	213	IC–Linear, Dual Op Amp
1530	1–198	317	IC–Linear, Audio Power Amp, 450mW, w/ALC
1531	1–198	271	IC–Linear, Voltage Regulator for Electronic Tuning System
1532	1–198	253	IC–Linear, TV Video Chroma Amp
1533	1–198	332	IC–Linear, AM Tuner System for Car Radio
1534	1–198	248	IC–CMOS, Phase Locked Loop (PLL) Frequency Synthesizer for AM/FM Radio
1535	1–198	252	IC–Linear, TV Sync Horiz/Vert OSC
1536	1–199	254	IC–CMOS, CB Phase–Locked Loop (PLL) Synthesizer
1537	1–199	335	IC–CMOS, Digital Frequency Indicator with Clock LEDS Functions
1538	1–199	248	IC–Linear, TV Horiz/Vert OSC, Driver
1539	1–199	287	IC–Linear, Color TV Sync, Defl Ckt
1540	1–199	248	IC–Linear, B/W TV Sync, Defl Ckt
1541	1–199	333	IC–Linear, FM IF Amp & Detector for Auto
1542	1–199	248	IC–Linear, Color TV Video IF
1543	1–200	248	IC–Linear, FM Noise Suppressor
1544	1–200	248	IC–Linear, TV Sync Proc with X–Ray Protect
1545	1–200	248	IC–Linear, Video IF, AGC Amp
1546	1–200	419	IC–Linear, Hybrid TV Voltage Reg
1547	1–200	335	IC–Linear, Video Chroma, Demod, Horiz Vert OSC Dr
1548	1–200	419	IC–Linear, Hybrid TV Vltg Reg
1549	1–200	287	IC–Linear, Voltage Level Indicator
1550	1–201	315	IC–Linear, TV Sync Signal Processor
1551	1–201	348	IC–Linear, TV Video IF Amp
1554	1–201	262	IC–Linear, 3–Phase Direct Drive Motor Driver
1556	1–201	248	IC–Linear, VIR Signal Processor
1557	1–201	249	IC–Linear, FM/AM IF System
1558	1–201	287	IC–Linear, VCR Switches Rec/PB Amp
1559	1–201	248	IC–Linear, FM–IF Amp, Demod
1560	1–201	249	IC–Linear PLL FM Stereo Multiplex
1561	1–202	223	IC–Linear, 5 LED VU Level Meter
1562	1–202	248	IC–Linear, 3–Item Programmable Search System Selector
1563	1–202	248	IC–Linear, AM Tuner, AM/FM–IF Amp
1565	1–202	248	IC–Linear, PLL FM Demod for Portable Car Radio
1566	1–202	507	IC–Linear, Audio Power Output, 4.5W
1567	1–202	506	IC–Linear, Vert Deflection Output Ckt
1568	1–202	249	IC–Linear, VCR FG Frequency Divider
1569	1–202	220	IC–Linear, Video Amp/Blanker/Black Control
1570	1–203	252	IC–Linear, TV Video IF/Sound IF/Audio Driver for NPN Tuner
1571	1–203	247	IC–Linear, Dual Preamp for Tape Recorder
1572	1–203	252	IC–Linear, TV Video IF/Sound IF/Audio Driver for FET Driver
1575	1–203	247	IC–Linear, B/W TV Sound IF Amp
1576	1–203	248	IC–Linear, Dual Vol Control/Balance Tone
1577	1–203	248	IC–Linear, Low Noise Dual Preamp with Auto Reverse
1578	1–203	248	IC–Linear, FM Mixer/IF Amp
1579	1–204	248	IC–Linear, FM–IF Amp/Demod
1580	1–204	247	IC–Linear, IF Amp and Detector
1581	1–204	246	IC–Linear, CMOS, VCR Freq Divider/Counter
1582	1–204	272	IC–Linear, VCR Counter/Dual Gate
1585	1–204	315	IC–Linear, VCR FM Demod AGC
1589	1–204	253	IC–Linear, Color TV Luminance Chroma System
1591	1–204	253	IC–Linear, Servo Controller for VCR
1593	1–205	248	IC–Linear, Color TV VIR Processor
1595	1–205	254	IC–Linear, VCR FM Demod/Limiter
1596	1–205	272	IC–Linear, FM Demod/Noise Canceller/ Video Amp
1597	1–205	315	IC–Linear, VCR Color Killer DET/APC Phase Comparator/Buffer Amp
1600	1–205	315	IC–Linear, VCR, DD Motor Pre Driver
1602	1–205	349	IC–Linear, Auto Radio Pwr Amp 19W
1604	1–206	332	IC–Linear, FM IF System for Auto Radio
1606	1–206	349	IC–Linear, Dual 4 to 7W Audio Pwr Amp
1607	1–206	326	IC–Linear, Video, Detector, AGC Circuit
1608	1–206	254	IC–Linear, AM Tuner with Electronic Tuning
1609	1–206	424	IC–Linear, Instrumentation Timer
1610	1–206	326	IC–Linear, TV VIF, Video Amp/Det/AGC
1611	1–206	248	IC–Linear, VCR Video & FM Sound Mod/Carrier OSC
1612	1–206	223	IC–Linear, 700mW AF PO, 6V
1613	1–207	500	IC–Linear, VCR Cylinder Motor Driver/ Control
1615	1–207	326	IC–Linear, Tuner Bandswitch Ckt
1616	1–207	247	IC–Linear, TV Sound IF Amp/Det, Dr
1618	1–207	326	IC–Linear, 4.5W Dual Pwr Amp

⇒ DENOTES NEW DEVICE

NTE PRODUCT NUMERICAL INDEX

NTE Type No.	Page No.	Diag. No.	Description
1619	1–207	319	IC–Linear, TV Video IF Amp/AGC
1620	1–207	326	IC–Linear, TV Video IF Amp/AGC
1621	1–207	252	IC–Linear, VCR, Rec Video Proc
1624	1–207	248	IC–Linear, AM/FM Radio Ckt w/Power Amp
1625	1–208	326	IC–Linear, Tuner Bandswitch/Tuning
1626	1–208	289	IC–Linear, Dual 4.2W Audio Amp
1627	1–208	223	IC–Linear, 6V/0.55W Audio Power Amp
1628	1–208	311	IC–Linear, Bi–Directional Motor Driver
1629	1–208	326	IC–Linear, TV Sync Sep Detector
1630	1–208	512	IC–Linear, VCR Cylinder Motor Driver
1631	1–208	517	IC–Linear, FM Stereo Multiplexer w/Soft Muting
1632	1–208	287	IC–Linear, Vert/Horiz Sync Sep
1633	1–209	339	IC–Linear, TV Sound Channel w/DC Controls
1634	1–209	247	IC–Linear, Dual PreAmp w/ALC
1635	1–209	408	IC–Linear, Speaker Protector/Vltg/ Temp/Overload
1636	1–209	337	IC–Linear, VCR/TV Picture Control
1637	1–209	320	IC–Linear, 2–Channel AF Power Amp
1639	1–209	246	IC–Linear, CMOS, Clock Generator/ Driver for BBD's
1641	1–209	246	IC–Linear, 1024 Stage BBD for Audio Signal Delays
⇒ 1645	1–209	419	IC–Linear, Hybrid TV Voltage Reg
1648	1–210	246	IC–Linear, Telephone Ringer
1649	1–210	246	IC–Linear, Telephone Ringer
1650	1–210	253	IC–Linear, Video Signal Processor w/Auto Flesh Control
1651	1–210	248	IC–Linear, Dual Preamp for Tape Recorder
1654	1–210	248	IC–Linear, FM/AM If System (Low Supply Vltg Use)
1655	1–210	248	IC–Linear, TV Stereo Decoder
1656	1–211	511	IC–Linear, TV IF System with AFT RF AGC Reverse
1657	1–211	213	IC–Linear, PLL FM Stereo Multiplex
1658	1–211	329	IC–Linear, TV Tuner Band Selector
1659	1–211	224	IC–Linear, Dual AF Preamp
1660	1–211	207	IC–Linear, Audio Preamp
1661	1–211	501	IC–Linear, TV Horiz/Vert Processor
1662	1–211	248	IC–Linear, TV Channel Selector System Controller
1663	1–212	513	IC–Linear, TV Sound IF Amp/Det/ AF Output Circuit
1664	1–212	337	IC–Linear, TV Vert/Horiz Sync
1666	1–212	207	IC–Linear, High Vltg. Low Noise Preamp
1667	1–212	263	IC–Linear, 2–Channel Amp, 2.3W/Ch
1668	1–212	224	IC–Linear, TV Sound IF/Det
1670	1–212	247	IC–Linear, Air Core Meter Driver
1671	1–212	335	IC–Linear, Video Chroma Demod, Horiz, Vert, OSC, Dr, HV Protect
1672	1–213	248	IC–Linear, Pwr Supply Control Ckt
1673	1–213	253	IC–Linear, Video/Chroma Processor
1674	1–213	312	IC–Linear, TV Vert Defl Output Ckt
1675	1–213	255	IC–Linear, Dual AF Pwr Amp
1676	1–213	277	IC–Linear, Vert Deflection Ckt for Color TV
1677	1–213	248	IC–Linear, Freq Synthesizer for TV/CATV
1678	1–213	250	IC–Linear, Switching Regulator for TV
1679	1–214	247	IC–Linear, Mode Detector
1680	1–214	208	IC–Linear, High Speed 6 Diode Array
1681	1–214	542	IC–Linear, High Pwr Switching Regulator
1682	1–214	326	IC–Linear, TV Remote Control Amp
1683	1–214	287	IC–Linear, Horiz/Vert Processing Ckt
1684	1–214	539	IC–Linear, TV Vert Deflection Ckt
1685	1–214	237	IC–Linear, Dual AF Pwr Output 3.5W/Ch
1687	1–215	455	IC–Linear, Dual 7.8W Audio Amp
1688	1–215	326	IC–Linear, TV Tuner Bandswitch
1689	1–215	287	IC–Linear, VCR Head Amp Ckt
1690	1–215	248	IC–Linear, Telephone DTMF Dialer
1691	1–215	287	IC–Linear, Telephone Pulse Dialer
1692	1–215	287	IC–Linear, Telephone Pulse Dialer
⇒ 1693	1–216	248	IC–Linear, Telephone Pulse Dialer (CMOS)
1700	1–216	287	IC–Linear, VCR 2, 4, & 6 Hour Auto Discriminator
1701	1–216	253	IC–Linear, VCR Cylinder Servo Control Ckt
1702	1–216	287	IC–Linear, VCR Color ACC Circuit
1703	1–216	249	IC–Linear, VCR Color APC (BM R/P Switching Ckt)
1704	1–216	326	IC–Linear, Audio Pwr Amp 1.2W
1705	1–217	548	IC–Linear, VCR Hall Switch
⇒ 1707	1–217	468	IC–Linear, Dual Channel Car Stereo AF PO, 5.5W/Ch
1708	1–217	329	IC–Linear, TV Tuner Band Selector
1709	1–217	326	IC–Linear, Dual Balanced Modulator for Video Cameras
1710	1–217	337	IC–Linear, VCR Rec/PB Circuit
1711	1–217	326	IC–Linear, VCR 2 Head Record Amp
1712	1–217	337	IC–Linear, VCR Rec. Video Signal Processing Ckt
1713	1–218	287	IC–Linear, VCR Line Noise Canceller
1714M	1–218	245	IC–Linear, Remote Control Amp, Detector
1714S	1–218	224	IC–Linear, Remote Control PreAmp

⇒ DENOTES NEW DEVICE

NTE PRODUCT NUMERICAL INDEX

NTE Type No.	Page No.	Diag. No.	Description
1715	1–218	287	IC–Linear, 8 Circuit Display Driver
1716	1–218	240	IC–Linear, VCR Reversible Motor Dr.
1717	1–218	517	IC–Linear, VCR Dual Switching Regulator
1718	1–218	213	IC–Linear, Dual Comparator
1720	1–219	249	IC–Linear, Pulse Width Modulator (PWM) Regulator
1721	1–219	249	IC–Linear, PWM Regulator, Output (+)
1722	1–219	287	IC–Linear, Switched Mode Pwr Supply Control Ckt
1723	1–219	249	IC–Linear, PWM Regulator, Output (–)
1724	1–219	443	IC–Linear, Audio Power Amp, 20W
1725	1–219	248	IC–Linear, Color TV Picture IF System
1726	1–219	252	IC–Linear, TV Video & Chroma Processing Ckt
1727	1–219	287	IC–Linear, TV Signal Processor
1728	1–220	536	IC–Linear, VCR VIF & SIF
1729	1–220	248	IC–Linear, PWM Control Ckt
1730	1–220	213	IC–Linear, Dual Pre Amp
⇒ 1731	1–220	248	IC–Linear, CMOS, 10 Number Dialer
1732	1–220	543	Module, TV Vltg Reg & 4W Audio Output
1733	1–220	544	Module, 4 Output Vltg Reg For VCR
1735	1–220	545	Module, 3 Output Vltg Reg for VCR
1736	1–221	450	Module, 4 Phase Stepping Motor Driver
1737	1–221	546	Module, Chopper w/2 Output Vltg Reg
1738	1–221	253	IC–Linear, TV Remote Control Receiver
1739	1–221	248	IC–Linear, Horiz/Vert Countdown Digital Sync System
1740	1–120	538	IC–Linear, TV Fixed Vltg. Reg, 115V 1A
1741	1–120	538	IC–Linear, TV Fixed Vltg Reg, 125V 1A
1742	1–120	538	IC–Linear, TV Fixed Vltg Reg, 130V 1A
1743	1–120	538	IC–Linear, TV Fixed Vltg Reg, 135V 1A
1744	1–222	337	IC–Linear, Dual dbx II, Noise Reduction System
1745	1–222	224	IC–Linear, VCR 1/20, 1/100 High Speed Driver
1747	1–222	253	IC–Linear, TV Video Processing Ckt
1748	1–222	549	IC–Linear, DC Motor Driver
1749	1–222	248	IC–Linear, Push–Pull Four Channel Driver
1750	1–222	542	IC–Linear, Hammer & Stepper Motor Driver
1751	1–223	220	IC–Linear, TV SCR Driver
1752	1–223	287	IC–Linear, Quasi–Split Sound IF w/Sound Demod
1753	1–223	247	IC–Linear, PWM Control Ckt
1754	1–223	438	IC–Linear, Vert Deflection Ckt
1755	1–223	287	IC–Linear, Remote Control Transmitter
1757	1–223	287	IC–Linear, Remote Control Receiver
1758	1–223	248	IC–Linear, CMOS, 27 Command TV Remote Control Transmitter
1759	1–223	248	IC–Linear, PMOS, 26 Command TV Remote Control Receiver
1761	1–224	248	IC–Linear, IR Remote Control Preamp (Active High Output)
1762	1–224	248	IC–Linear, IR Remote Control Preamp (Active Low Output)
1764	1–224	247	IC–Linear, Infrared PreAmp
1765	1–224	248	Dual Channel Current Mode Controller, V_{CC} = 15V Typ
1771	1–224	536	IC–Linear, TV Video Processor
⇒ 1772	1–224	337	IC–Linear, Color TV Sync, Defl Ckt
1773	1–224	537	IC–Linear, Color TV Vert Defl Output
1774	1–224	447	IC–Linear, Dual Bi–Directional Motor Driver
1775	1–225	249	IC–Linear, TV PIF Subsystem
⇒ 1776	1–120	453	IC–Linear, TV Fixed Vltg Reg, 123V, 1A
1777	1–120	453	IC–Linear, TV Fixed Vltg Reg, 130V, 1A
1778	1–120	453	IC–Linear, TV Fixed Vltg Reg, 135V, 1A
1779	1–225	540	IC–Linear, TV VIF Amp, PLL Det
1780	1–225	448	IC–Linear, 2 Ch Tone/Vol Ckt
⇒ 1781	1–225	328	IC–Linear, Electronic Switch for VCR
1782	1–225	539	IC–Linear, TV Vert Drive/Output Ckt
⇒ 1783	1–226	215	IC–Linear, TV DC Volume Control & Mute
⇒ 1784	1–226	248	IC–Linear, TV Horizontal Processor
1785	1–226	249	IC–Linear, IF Amp w/Demod & AFC
⇒ 1786	1–226	252	IC–Linear, TV Freq Locked Loop (FLL) Tuning & Control Ckt
⇒ 1787	1–226	462	IC–Linear, VCR Rec/PB Switch
⇒ 1788	1–226	463	IC–Linear, TV Vert Deflection Output
1789	1–226	312	IC–Linear, TV Sound PreAmp, AF Output, Vol Ctrl
1790	1–227	451	IC–Linear, Video IF, Chroma Deflection
⇒ 1791	1–227	469	IC–Linear, TV Remote Control Amp
⇒ 1792	1–227	469	IC–Linear, Dual Attenuator
⇒ 1793	1–227	454	IC–Linear, NTSC Chroma, Luminance, Sync & Deflection Ckt
⇒ 1794	1–227	224	IC–Linear, VCA for dbx Noise Reduction
⇒ 1795	1–228	224	IC–Linear, RMS Level Sensor for dbx Noise Reduction
⇒ 1796	1–120	453	IC–Linear, TV Fixed Vltg Reg, 114.5V, 6A
1797	1–228	322	IC–Linear, Color TV Vert Defl Output Ckt
1798	1–228	322	IC–Linear, AF PO, 6W/Ch
⇒ 1799	1–228	248	IC–Linear, Electronic Switch for VCR & Audio Applications
⇒ 1800	1–228	536	IC–Linear, TV Multiplex Sound Decoder

⇒ DENOTES NEW DEVICE

NTE PRODUCT NUMERICAL INDEX

NTE Type No.	Page No.	Diag. No.	Description
⇒ 1801	1–228	457	IC–Linear, TV dbx Noise Reduction Syst
⇒ 1803	1–229	287	IC–Linear, Stereo Audio Control
⇒ 1804	1–229	466	IC–Linear, Vert Deflection for Large Screen TV
⇒ 1805	1–229	457	IC–Linear, VCR Recording Video Signal Processing Ckt
1808	1–229	457	IC–Linear, VCR Video Processor
1809	1–229	444	IC–Linear, VCR Motor Driver Ckt
⇒ 1810	1–229	457	IC–Linear, Color TV Video System
⇒ 1811	1–230	287	IC–Linear, VCR Cylinder Interface Ckt
⇒ 1812	1–230	254	IC–Linear, VCR Capstan Interface Ckt
1813	1–230	458	IC–Linear, VCR Color Signal Ckt
1814	1–230	449	IC–Linear, VCR Color Processor
⇒ 1815	1–230	545	Module, Dual Power Supply AF PO, 20W
⇒ 1816	1–230	546	Module, Dual Power Supply AF PO, 6W/Ch
⇒ 1817	1–231	546	Module, Dual Power Supply AF PO, 20W/Ch
⇒ 1818	1–231	546	Module, Dual Power Supply AF PO, 25W/Ch
⇒ 1819	1–231	546	Module, Dual Power Supply AF PO, 30W/Ch
⇒ 1820	1–231	232	Module, Dual Power Supply AF PO, 30W/Ch
⇒ 1822	1–231	465	Module, 3 Output Vltg Reg for VCR
⇒ 1823	1–231	495	Module, 4 Output Vltg Reg for VCR
⇒ 1824	1–231	464	Module, DC Pulse Motor Driver for VCR
⇒ 1825	1–232	497	IC–Linear, Dual DC Motor Driver
⇒ 1826	1–232	442	IC–Linear, VCR 3 Input Switch w/Mute
⇒ 1827	1–232	339	IC–Linear, TV/VCR VIF & SIF Ckt
⇒ 1828	1–232	326	IC–Linear, Quad Transistor Array, 10kΩ
⇒ 1829	1–232	326	IC–Linear, Quad Transistor Array, 5kΩ
⇒ 1830	1–232	470	IC–Linear, Dual Audio Power Amp 5.8W (19W–BTL) (Reverse Pinout of NTE1831)
⇒ 1831	1–232	470	IC–Linear, Dual Audio Power Amp 5.8W (19W–BTL) (Reverse Pinout of NTE1830)
⇒ 1832	1–232	496	IC–Linear, 12W BTL Audio Power Amp
⇒ 1833	1–232	287	IC–Linear, Dolby® B Type Noise Reduction System
⇒ 1834	1–233	240	IC–Linear, Dual Reversible Motor Driver
⇒ 1835	1–233	337	IC–Linear, TV Interface for Character and Pattern
⇒ 1836	1–233	339	IC–Linear, TV/VCR Freq Synthesizer
⇒ 1837	1–233	248	IC–Linear, TV Tuner Controller
⇒ 1838	1–233	536	IC–Linear, Color TV Video, Chroma, Deflection Ckt
⇒ 1839	1–120	453	IC–Linear, TV Fixed Vltg Reg, 120V, 1A
⇒ 1840	1–120	453	IC–Linear, TV Fixed Vltg Reg, 41.8V, 2A
⇒ 1842	1–234	248	IC–Linear, FM/AM IF System
⇒ 1843	1–234	213	IC–Linear, FM Front End
⇒ 1844	1–234	476	IC–Linear, Motor Speed Regulator
⇒ 1845	1–234	536	IC–Linear, Color TV Video, Chroma, Deflection Ckt w/Peak Clip
⇒ 1846	1–234	484	IC–Linear, Color TV Signal Processor
⇒ 1847	1–234	536	IC–Linear, TV/VCR Tuner
⇒ 1848	1–235	479	IC–Linear, Stepping Motor Driver
⇒ 1849	1–235	248	IC–Linear, CMOS Freq Synth for TV Tuning System
⇒ 1851	1–235	466	IC–Linear, 24W BTL Audio Amp
⇒ 1852	1–235	507	IC–Linear, 4W Audio Power Amp w/DC Volume Control
⇒ 1854M	1–235	245	IC–Linear, Dual Power OP Amp
⇒ 1855	1–235	478	IC–Linear, Vert Deflection Output Ckt w/Driver
⇒ 1856	1–236	536	IC–Linear, Color TV VIdeo, Chroma, Deflection Ckt
⇒ 1857	1–236	248	IC–Linear, Stepper Motor Driver
⇒ 1858	1–236	310	IC–Linear, Vertical Deflection Ckt
⇒ 1859	1–236	248	IC–Linear, TV dbx Noise Reduction System
⇒ 1860	1–236	454	IC–Linear, US TV Audio Multiplexing System
⇒ 1861	1–237	445	IC–Linear, TV Video IF Processor
⇒ 1863	1–237	454	IC–Linear, Single Chip Signal Processor for Color TV
⇒ 1866	1–237	223	IC–Linear, 5 Point LED VU Scale Bar Level Meter Driver
⇒ 1867	1–237	499	IC–Linear, Hybrid TV Voltage Reg
⇒ 1868	1–237	499	IC–Linear, Hybrid TV Voltage Reg
⇒ 1870	1–237	486	Module, Color TV Switching Regulator
⇒ 1871	1–238	546	Module, Dual Power Supply AF PO, 50W/Ch
⇒ 1872	1–238	545	Module, 4 Output Vltg Reg for VCR
⇒ 1873	1–238	214	IC–Linear, 2 Input Switch for VCR System
⇒ 1874	1–238	546	Module, Dual Power Supply AF PO, 15W/Ch
⇒ 1875	1–238	232	Module, Dual Power Supply AF PO, 30W/Ch
⇒ 1876	1–238	545	Module, 4 Output Vltg Reg for VCR
⇒ 1877	1–239	546	Module, Audio Power Output, 28W/Ch
⇒ 1879	1–239	238	Module, Dual Power Supply AF PO, 18W/Ch
⇒ 1880	1–239	487	Module, 3 Output Vltg Reg for VCR
⇒ 1881	1–239	488	Module, 3 Output Vltg Reg for VCR

⇒ DENOTES NEW DEVICE

NTE PRODUCT NUMERICAL INDEX

NTE Type No.	Page No.	Diag. No.	Description
⇒ 1883	1–239	485	Module, 3 Output Vltg Reg for VCR
⇒ 1884	1–239	488	Module, 3 Output Vltg Reg for VCR
⇒ 1885	1–239	546	Module, 4 Phase Stepping Motor Driver, 1.75A
⇒ 1888	1–239	249	IC–Linear, Horiz & Vert Deflection Ckt
⇒ 1890	1–240	252	IC–Linear, NTSC Decoder for TV
⇒ 1893	1–240	492	IC–Linear, 3 Phase Brushless Motor Driver
⇒ 1894	1–120	453	IC–Linear, TV Fixed Vltg Reg, 41.8V, 1.2A
⇒ 1895	1–120	453	IC–Linear, TV Fixed Vltg Reg, 110V, 1A
⇒ 1896	1–120	453	IC–Linear, TV Fixed Vltg Reg, 115V, 1A
⇒ 1897	1–120	453	IC–Linear, TV Fixed Vltg Reg, 125V, 1A
⇒ 1898	1–240	470	IC–Linear, Audio Power Amp, 5.8W/Ch, (22W BTL) (Reverse Pinout of NTE1899)
⇒ 1899	1–240	470	IC–Linear, Audio Power Amp, 5.8W/Ch, (22W BTL) (Reverse Pinout of NTE1898)
1900	1–118	9q	IC–Vltg Reg, Pos Adj., 1.2V to 37V, 100mA
1901	1–119	9q	IC–Vltg Reg, Neg Adj., –1.2V to –37V, 100mA
1902	1–118	9l	IC–Vltg Reg, Pos, 9V, 100mA
1903	1–119	9p	IC–Vltg Reg, Neg, –12V, 100mA
1905	1–119	9p	IC–Vltg Reg, Neg, –15V, 100mA
1906	1–118	9l	IC–Vltg Reg, Pos, 18V, 100mA
1907	1–119	9p	IC–Vltg Reg, Neg, –18V, 100mA
1909	1–119	9p	IC–Vltg Reg, Neg, –24V, 100mA
1911	1–119	1d	IC–Vltg Reg, Neg, Adj., –1.2V to –37V, 1.5A
1912	1–118	1c	IC–Vltg Reg, Pos, 12V, 3A
1913	1–119	1e	IC–Vltg Reg, Neg, –5V, 1.5A
1914	1–118	1e	IC–Vltg Reg, Neg, –12V, 1.5A
1915	1–119	1e	IC–Vltg Reg, Neg, –12V, 1.5A
1916	1–118	1c	IC–Vltg Reg, Pos, 15V, 1.5A
1917	1–119	9p	IC–Vltg Reg, Neg, –5V, 100mA
1918	1–118	1c	IC–Vltg Reg, Pos, 15V, 3A
1919	1–119	1e	IC–Vltg Reg, Neg, –15V, 1.5A
1920	1–118	1c	IC–Vltg Reg, Pos, 18V, 3A
1923	1–119	1e	IC–Vltg Reg, Neg, –18V, 1.5A
1924	1–118	1c	IC–Vltg Reg, Pos, 24V, 1.5A
1925	1–119	1e	IC–Vltg Reg, Neg, –24V, 1.5A
1927	1–119	414b	IC–Vltg Reg, Neg Adj., –4.5V to –40V, 45mA
1928	1–118	200	IC–Vltg Reg, Pos Adj., 4.5V to 40V, 45mA
1930	1–118	245	IC–Vltg Reg, Pos Adj., 8–Lead DIP 5V to 37V, 25mA
1932	1–118	11f	IC–Vltg Reg, Pos, 10V, 1A
1934	1–118	59b	IC–Vltg Reg, Pos, 5V, 2A
⇒ 1934X	1–118	59c	IC–Vltg Reg, Pos, 5V, 2A
1936	1–118	59b	IC–Vltg Reg, Pos, 12V, 2A
1938	1–118	59b	IC–Vltg Reg, Pos, 15V, 2A
1940	1–118	59b	IC–Vltg Reg, Pos, 24V, 2A
⇒ 1942	1–118	205	IC–Vltg Reg, Pos Adj., 2.85V to 36V, 2A
2000	1–242	315	IC–Dolby® Noise Reduction Circuit
2001	1–242	249	IC–Linear, Dolby® B–Type Noise Processor
2003	1–242	338	IC–Dolby® Noise Reduction Circuit
2004	1–243	249	IC–Dolby® Noise Reduction Circuit
2011	1–305	249	IC–7–Channel, PMOS, CMOS Input Driver Array
2012	1–305	249	IC–7–Channel, PMOS, CMOS Input, Driver Array
2013	1–305	249	IC–7–Channel, 5V TTL, CMOS Input, Driver Array
2014	1–305	249	IC–7–Channel, 6V to 15V, CMOS, PMOS Input, Driver Array
2015	1–305	249	IC–7–Channel, High Output, TTL Input, Driver Array
2016	1–305	298	IC–8–Channel, PMOS, CMOS Input, Driver Array
2017	1–305	298	IC–8–Channel, 14V to 25V, PMOS Input, Driver Array
2018	1–305	298	IC–8–Channel, 5V TTL, CMOS Input, Driver Array
2019	1–305	298	IC–8–Channel, 6V to 15V, CMOS, PMOS Input, Driver Array
2020	1–305	298	IC–8–Channel, High Output, TTL Input, Driver Array
2021	1–305	298	IC–8–Channel, Fluorescent Display Driver for Use with TTL
2022	1–305	298	IC–8–Channel, Fluorescent Display Driver for Use with MOS
2023	1–305	249	IC–7–Segment Display Driver
2024	1–305	252	IC–2–Digit BCD to 7 Segment Decoder/Driver
2025	1–305	247	IC–4–Segment Gas Discharge Display Driver
2026	1–305	249	IC–6–Segment Gas Discharge Display Driver
2027	1–306	247	IC–Hex LED Digit Driver
2028	1–306	249	IC–High Voltage 7–Segment Decoder/Driver
2030	1–306	298	IC–High Voltage Segment Driver for Gas Discharge Tubes
2031	1–306	249	IC–High Voltage Digit Driver
2032	1–306	249	IC–BCD–to–Seven Segment Decoder Driver
2047	1–251	249	IC–CMOS, Universal Low Speed Modem (0–600 bps)
2050	1–306	299	IC–CMOS, 3 1/2–Digit LED Single Chip A/D Converter/Driver

⇒ DENOTES NEW DEVICE

NTE PRODUCT NUMERICAL INDEX

NTE Type No.	Page No.	Diag. No.	Description
2051	1–306	299	IC–CMOS, 3 1/2–Digit LCD Single Chip A/D Converter/Driver
2053	1–307	339	IC–CMOS–8–Bit MPU and A/D Converter
2054	1–307	249	IC–A/D Converter
2055	1–251	252	IC–CMOS, Low Pwr, 3 1/2–Digit A/D Converter
2056	1–314	249	IC–8–Bit Multiplying D/A Converter
⇒ 2057	1–251	253	IC–Dual 16–Bit D to A Converter
2060	1–307	299	IC–PMOS LSI, Alarm Clock Circuit
2061	1–307	299	IC–PMOS LSI, Alarm Clock Circuit, w/Blanking Input
2062	1–307	445	IC–Duplex Digital Clock
2070	1–307	298	IC–7–Segment, 150mA Transistor Array w/Clamp Diode & Strobe
2071	1–307	340	IC–7–Segment, 150mA Transistor Array w/Clamp Diode & Strobe
2072	1–308	249	IC–6–Segment, 320mA Transistor Array w/Clamp Diode & Strobe
2073	1–308	249	IC–6–Segment, 320mA Transistor Array w/Clamp Diode & Strobe
2074	1–308	249	IC–7–Segment, 400mA Darlington Transistor Array w/Clamp Diode
2075	1–308	247	IC–5–Segment, 320mA Transistor Array w/Strobe
2076	1–308	249	IC–7–Segment, 150mA Darlington Transistor Array w/Clamp Diode
2077	1–308	247	IC–6–Segment, 150mA Transistor Array w/Clamp Diode
2078	1–308	247	IC–5–Segment, 500mA Darlington Transistor
2079	1–308	249	IC–7–Segment, 400mA Darlington Transistor Array
2080	1–308	341	IC–7–Stage Driver Array
2081	1–308	249	IC–7–Segment, 100mA Transistor Array
2082	1–308	318	IC–6–Stage Darlington Array
2083	1–308	247	IC–6–Segment, 150mA Darlington Transistor Array
2084	1–308	342	IC–5–Segment, 150mA Darlington Transistor Array
2085	1–308	249	IC–4–Segment, 1.75A Darlington Array for TTL Use
2086	1–308	249	IC–4–Segment Darlington Array, for PMOS and 12V CMOS Use
2087	1–308	248	IC–4–Segment Darlington Array, includes Pre–Driver Stage TTL for Use with TTL
2088	1–308	248	IC–4–Segment Darlington Array, includes Pre–Driver Stage, for Use with PMOS & 12V CMOS
2102	1–314	249	IC–MOS, Static 1K RAM, 350ns
2104	1–314	249	IC–MOS, Dynamic 4K RAM, 200ns
2107	1–314	336	IC–MOS, Dynamic 4K RAM, 200ns
2114	1–314	298	IC–MOS, Static 4K RAM, 300ns
2117	1–314	249	IC–MOS, Dynamic 16K RAM, 200ns
2128	1–314	252	IC–NMOS, 16K Static RAM, 150ns
2147	1–314	298	IC–MOS, Static 4K RAM, 55ns
2164	1–314	249	IC–MOS, 64K DRAM, 150ns
2300	1–22	55	T–NPN, Si, Fast Switching, HV, 1500V,
2301	1–22	55	T–NPN, Si, Horiz Deflection 1550V, 5A
2302	1–22	59a	T–NPN, Si, Horiz Output, 1500V, 5A
2303	1–22	11a	T–NPN, Si, HV Horiz Output, 1500V, 2.5A
2304	1–22	59a	T–NPN, Si, High Current Sw, 60V, 15A (Compl to NTE2314)
2305	1–22	55	T–NPN, Si, HV Pwr Amp, 160V, 20A (Compl to NTE2306)
2306	1–22	55	T–PNP, Si, HV Pwr Amp, 160V, 20A (Compl to NTE2305)
2307	1–22	59a	T–NPN, Si, HV Amp, 200V, 5A
2308	1–22	59a	T–NPN, Si, HV Switch, 500V, 12A
2309	1–22	59a	T–NPN, Si, HV Switch, 900V, 8A
2310	1–22	55	T–NPN, Si, HV Switch, 1000V, 8A
2311	1–22	55	T–NPN, Si, HV Switch, 1000V, 15A
2312	1–22	11a	T–NPN, Si, High Vltg, High Speed Sw
2313	1–22	11a	T–NPN, Si, High Speed Switch
2314	1–22	59a	T–PNP Si, HV Switch, 60V, 15A (Compl to NTE2304)
2315	1–22	11a	T–NPN Si, Fast Switching, Darlington, 400V, 8A
2316	1–22	55	T–NPN, Si, HV, Darlington, 500V, 10A
2317	1–22	55	T–NPN, Si, HV, Darlington, 500V, 15A
2318	1–22	55	T–NPN, Si, High Vltg Sw w/Internal Damper Diode
2319	1–22	1a	T–NPN, Si, High Vltg, High Speed, Power Switch
2320	1–22	247	T–NPN/PNP, Si, Quad Amp, 60V, 500mA
2321	1–22	247	T–NPN, Si, Quad Gen Purp, 60V, 500mA
2323	1–22	247	T–NPN, Si, Quad HV Amp, 200V, 500mA
⇒ 2324	1–23	477	T–NPN, Si, High Voltage Switch
⇒ 2325	1–23	11a	T–NPN, Si, High Voltage Switch
2327	1–23	7a	T–NPN, Si, High Speed Switch
2328	1–23	556	T–NPN, Si, Audio Power Output (Compl to NTE2329)
2329	1–23	556	T–PNP, Si, Audio Power Output (Compl to NTE2328)
2330	1–23	59a	T–NPN, Si, High Gain Amp w/Internal Zener Diode
⇒ 2331	1–23	477	T–NPN, Si, Color TV Horiz Deflection w/internal Damper Diode
2332	1–23	11a	T–NPN, Si, Darlington w/Internal Damper & Zener Diode
2334	1–23	11a	T–NPN, Si, Darlington Dr w/Internal Damper & Zener Diode
⇒ 2335	1–23	59c	T–NPN, Si, Darlington w/Internal Zener Diode for Line Operated TV Systems

⇒ DENOTES NEW DEVICE

NTE PRODUCT NUMERICAL INDEX

NTE Type No.	Page No.	Diag. No.	Description
2336	1–23	11l	T–NPN, Si, Darlington Sw w/Internal Damper & Zener Diode
⇒ 2337	1–23	11a	T–NPN, Si, High Vltg, High Speed, t_f = 0.3µs
2338	1–23	7a	T–NPN, Si, Darlington Pwr Amp w/Internal Damper & Zener Diode
2340	1–23	523	T–NPN, Si, Darlington Sw w/Internal Damper & Zener Diode
⇒ 2343	1–23	11a	T–NPN, Si, Darlington Audio Amp, Dr (Compl to NTE2344)
⇒ 2344	1–23	11a	T–PNP, Si, Darlington Audio Amp, Dr (Compl to NTE2344)
2349	1–23	1a	T–NPN, Si, High Current Darlington (Compl to NTE2350)
2350	1–23	1a	T–PNP, Si, High Current Darlington (Compl to NTE2349)
⇒ 2351	1–23	523	T–NPN, Si, Darlington Power Amp/Sw (Compl to NTE2352)
⇒ 2352	1–23	523	T–PNP, Si, Darlington Power Amp/Sw (Compl to NTE2351)
2355	1–23	508	T–NPN, Si, Digital w/10K Resistor (Compl to NTE2356)
2356	1–23	508	T–PNP, Si, Digital w/10K Resistor (Compl to NTE2355)
2357	1–24	508	T–NPN, Si, Digital w/22K Resistor (Compl to NTE2358)
2358	1–24	508	T–PNP, Si, Digital w/22K Resistor (Compl to NTE2357)
2359	1–24	508	T–NPN, Si, Digital w/47K Resistor (Compl to NTE2360)
2360	1–24	508	T–PNP, Si, Digital w/47K Resistor (Compl to NTE2359)
⇒ 2361	1–24	508	T–NPN, Si, High Speed Switch (Compl to NTE2362)
⇒ 2362	1–24	508	T–PNP, Si, High Speed Switch (Compl to NTE2361)
2380	1–40	11b	MOSFET–N–Ch, Power, High Speed (Compl to NTE2381)
2381	1–40	11b	MOSFET–P–Ch, Power High Speed (Compl to NTE2380)
2382	1–40	11b	MOSFET–N–Ch, Power, High Speed (Compl to NTE2383)
2383	1–40	11b	MOSFET–P–Ch, Power, High Speed (Compl to NTE2382)
⇒ 2384	1–40	1f	MOSFET–N–Ch, Power, High Speed
⇒ 2385	1–40	11b	MOSFET–N–Ch, Power, High Speed
2386	1–40	1f	MOSFET–N–Ch, Power, High Speed
⇒ 2387	1–40	11b	MOSFET–N–Ch, Power, High Speed
⇒ 2388	1–40	11b	MOSFET–N–Ch, Power, High Speed
2390	1–40	11b	MOSFET–N–Ch, Power, High Speed
2392	1–40	1f	MOSFET–N–Ch, Power, High Speed
2401	1–24	547a	T–PNP, Si, RF Amp
2402	1–24	547a	T–NPN, Si, Low Noise, UHF/VHF Amp (Compl to NTE2403)
2403	1–24	547a	T–PNP, Si, Low Noise, UHF/VHF Amp (Compl to NTE2402)
2404	1–24	547a	T–NPN, Si, Darlington (Compl to NTE2405)
2405	1–24	547a	T–PNP, Si, Darlington (Compl to NTE2404)
2406	1–24	547a	T–NPN, Si, Gen Purp Amp (Compl to NTE2407)
2407	1–24	547a	T–PNP, Si, Gen Purp Amp (Compl to NTE2406)
2408	1–24	547a	T–NPN, Si, Low Noise, Driver, Output (Compl to NTE2409)
2409	1–24	547a	T–PNP, Si, Low Noise, Driver, Output (Compl to NTE2408)
2411	1–24	547a	T–PNP, Si, High Vltg Amp/Driver
2412	1–24	547a	T–NPN, Si, Gen Purp HV Amp (Compl to NTE2413)
2413	1–24	547a	T–PNP, Si, Gen Purp HV Amp (Compl to NTE2412)
2414	1–24	547b	T–NPN, Si, Digital w/10K Resistor (Compl to NTE2415)
2415	1–24	547b	T–PNP, Si, Digital w/10K Resistor (Compl to NTE2414)
2416	1–24	547b	T–NPN, Si, Digital w/22K Resistor (Compl to NTE2417)
2417	1–24	547b	T–PNP, Si, Digital w/22K Resistor (Compl to NTE2416)
2418	1–25	547b	T–NPN, Si, Digital w/47K Resistor (Compl to NTE2419)
2419	1–25	547b	T–PNP, Si, Digital w/47K Resistor (Compl to NTE2418)
2426	1–25	555	T–NPN, Si, Darlington Switch (Compl to NTE2427)
2427	1–25	555	T–PNP, Si, Darlington Switch (Compl to NTE2426)
2428	1–25	555	T–NPN, Si, Gen Purp Amp, Sw (Compl to NTE2429)
2429	1–25	555	T–PNP, Si, Gen Purp Amp, Sw (Compl to NTE2428)
2430	1–25	555	T–NPN, Si, HV Amp/Switch (Compl to NTE2431)
2431	1–25	555	T–PNP, Si, HV Amp/Switch (Compl to NTE2430
2532	1–315	300	IC–NMOS, 32K EPROM, 300ns
2708	1–315	300	IC–NMOS, 8K UV EPROM, 450ns
2716	1–315	300	IC–NMOS, 8K UV EPROM, 450ns
2732A	1–315	300	IC–NMOS, 32K UV EPROM, 200ns
2764	1–315	510	IC–NMOS, 64K Erasable EPROM, 200ns
2800	1–315	247	IC–MOS, 1400 Bit Serial EAROM
3000	1–102	133	LED, Miniature, Clear Red, Axial Lead (4/Pkg)

⇒ DENOTES NEW DEVICE

NTE PRODUCT NUMERICAL INDEX

NTE Type No.	Page No.	Diag. No.	Description
3001	1–102	133	LED, Miniature, Diffused Red, Axial Lead, (4/Pkg)
3002	1–102	133	LED, Miniature, Clear Yellow, Axial Lead (2/Pkg)
3003	1–102	133	LED, Miniature, Clear Green, Axial Lead (2/Pkg)
3004	1–102	134	LED, Miniature, Diffused Red, Axial Lead (2/Pkg)
3005	1–105	147	Infrared Emitting Diode
3007	1–102	135	LED, Diffused Red, Gen Purp, T–1 (4/Pkg)
3008	1–102	135	LED, Bright Red, Gen Purp, T–1 (2/Pkg)
3009	1–102	135	LED, Diffused Orange, Gen Purp, T–1 (2/Pkg)
3010	1–102	135	LED, Diffused Green, Gen Purp, T–1 (2/Pkg)
3011	1–102	135	LED, Diffused Yellow, Gen Purp, T–1 (2/Pkg)
3012	1–102	136	LED, Low Profile, Diffused Red (2/Pkg)
3013	1–102	137	LED, Low Profile, Jewel, Clear Red (2/Pkg)
3014	1–102	136	LED, Low Profile, Diffused Green (2/Pkg)
3015	1–102	137	LED, Low Profile, Jewel, Clear Green (2/Pkg)
3016	1–102	138	LED, 2 Color (Red or Green) Indicator (2/Pkg)
3018	1–102	139	LED, Soft Red, 90° Viewing Angle
3019	1–102	139	LED, Soft Red, 60° Viewing Angle (2/Pkg)
3020	1–102	140	LED, Gen Purp, Diffused Red (2/Pkg)
3021	1–102	140	LED, Gen Purp, Diffused Yellow (2/Pkg)
3022	1–102	140	LED, Gen Purp, High Eff Diffused Red (2/Pkg)
3023	1–102	140	LED, Gen Purp, Diffused Orange (2/Pkg)
3024	1–102	140	LED, Gen Purp, Diffused Green (2/Pkg)
3025	1–102	141	LED, Gen Purp, Red (2/Pkg)
3026	1–102	144	LED, Polarity Indicator, Green or Red
3027	1–105	144	Infrared Emitting Diode
3028	1–105	145	Infrared Emitting Diode
3029A	1–105	504	Infrared Emitting Diode
3030	1–102	383	LED, Diffused Red, Blinking
3031	1–105	148	Phototransistor, NPN–Si, Visible & IR
3032	1–105	149	Phototransistor, NPN–Si, Visible & IR
3033	1–105	437	Infrared Pin Detector Diode
3034A	1–105	504b	Phototransistor, NPN–Si, Photo/Light Detector
3035A	1–105	504b	Phototransistor, NPN–Si, Photo Darlington
3036	1–105	151	Photodarlington, NPN–Si, Light Detector
3037	1–105	151	Phototransistor, NPN–Si, Visible & IR
3038	1–105	174	Phototransistor, NPN–Si, Visible Only
3040	1–106	152a	Optoisolator, NPN Transistor Output
3042	1–106	152a	Optoisolator, NPN Transistor Output
3043	1–106	152a	Optoisolator, NPN Transistor Output
3044	1–106	152c	Optoisolator, NPN Darlington Output
3045	1–106	152c	Optoisolator, NPN Darlington Output
3046	1–106	152b	Optoisolator, SCR Output
3047	1–106	152e	Optoisolator, TRIAC Output
3048	1–106	152e	Optoisolator, TRIAC Output
3049	1–106	152d	Optoisolator, TRIAC with Zero Crossing Circuit
3050	1–108	153	LED Display, .270", Com Anode, Red, LHDP
3051	1–108	154	LED Display, .270", Com Anode, Red, Polarity/Overflow
3052	1–108	155a	LED Display, .300" Com Anode, Red, RHDP
3053	1–108	155a	LED Display, .300" Com Anode, Orange, RHDP
3054	1–108	155a	LED Display, .300" Com Anode, Green, RHDP
3055	1–108	155a	LED Display, .300" Com Anode, Yellow, RHDP
3056	1–108	155b	LED Display, .300" Com Cathode, Red, RHDP
3057	1–108	155c	LED Display, .300" Com Cathode, Red, RHDP
3058	1–108	155b	LED Display, .300" Com Cathode, Orange, RHDP
3059	1–108	155b	LED Display, .300" Com Cathode, Green, RHDP
3060	1–108	155b	LED Display, .300" Com Cathode, Yellow, RHDP
3061	1–108	156	LED Display, .300" Com Anode, Red, LHDP
3062	1–108	156	LED Display, .300" Com Anode, Orange, LHDP
3063	1–108	156	LED Display, .300" Com Anode, Green, LHDP
3064	1–108	156	LED Display, .300" Com Anode, Yellow, LHDP
3065	1–108	157	LED Display, .300" Com Anode, Red, RHDP, Polarity/Overflow
3068	1–108	158a	LED Display, .400" Com Anode, Red, RHDP
3069	1–108	158b	LED Display, .400" Com Cathode, Red, RHDP

⇒ DENOTES NEW DEVICE

NTE PRODUCT NUMERICAL INDEX

NTE Type No.	Page No.	Diag. No.	Description
3070	1–108	158a	LED Display, .400" Com Anode, Orange, RHDP
3071	1–108	158b	LED Display, .400" Com Cathode, Orange, RHDP
3074	1–108	159a	LED Display, .560" Com Anode, Red, RHDP, 2–Digit
3075	1–108	159b	LED Display, .560" Com Cathode, Red, RHDP, 2–Digit
3076	1–108	160a	LED Display, .560" Com Anode, Red, RHDP, 1–1 1/2 Digit
3077	1–108	160b	LED Display, .560" Com Cathode, Red, RHDP, 1–1 1/2 Digit
3078	1–108	161a	LED Display, .560" Com Anode, Red, RHDP
3079	1–108	161b	LED Display, .560" Com Cathode, Red, RHDP
3080	1–108	162	LED Display, .800" Com Anode, Red, RHDP
3081	1–106	179a	Optoisolator, NPN Transistor Output
3082	1–106	179b	Optoisolator, NPN Darlington Output
3083	1–106	152f	Optoisolator, NPN Darlington Output
3084	1–106	152f	Optoisolator, NPN Darlington Output
3085	1–107	152g	Optoisolator, FET Output
3086	1–106	401a	Optoisolator, Dual NPN Transistor Output
3087	1–107	401b	Optoisolator, TTL Compatible Logic Gate Output
3088	1–106	152f	Optoisolator, HV Transistor Output
3089	1–106	152i	Optoisolator, Transistor Output
3090	1–107	152h	Optoisolator, Schmitt Trigger Output
3091	1–106	152b	Optoisolator, Photo SCR Output
3092	1–107	401e	Optoisolator, Open Collector, NPN Transistor Output
3093	1–107	401d	Optoisolator, NPN Split Darlington Output
3094	1–107	401f	Optoisolator, Dual Open Collector NAND Gate
3095	1–107	401c	Optoisolator, Dual Open Collector NPN Transistor
3096	1–106	152a	Optoisolator, Low LED Drive NPN Transistor
3097	1–106	152d	Optoisolator, Zero Crossing Triac Driver
⇒ 3098	1–106	483a	Optoisolator, NPN Transistor Output
⇒ 3099	1–105	460	Infrared Light Emitting Diode (Bi–Directional)
3100	1–105	399	Opto Interrupter Module, NPN Transistor Output
3101	1–105	399	Opto Interrupter Module, NPN Darlington Output
3102	1–105	400	Opto Interrupter Module, NPN Transistor Output
3103	1–105	400	Opto Interrupter Module, NPN Darlington Output
3111	1–111	398	Bar Graph Display, Red, 5–Segment, Com Anode
3112	1–111	398	Bar Graph Display, Green, 5–Segment, Com Anode
3113	1–111	169	Bar Graph Display, Red, 9–Segment, Com Anode
3114	1–111	169	Bar Graph Display, Green, 9–Segment, Com Anode
3115	1–111	163	Bar Graph Display, Red, 10–Segment, Sep Anodes & Cathodes
3116	1–111	163	Bar Graph Display, Green, 10–Segment, Sep Anodes & Cathodes
3117	1–111	163	Bar Graph Display, Yellow, 10–Segment, Sep Anodes & Cathodes
3120	1–105	505	Phototransistor, NPN–Si, 20V, 30mA
3130	1–103	383	LED, Flashing Yellow
3131	1–103	383	LED, Flashing Green
3150	1–104	164	5–Lamp LED Array, Red, Rectangular
3151	1–104	164	5–Lamp LED Array, Green, Rectangular
3152	1–104	164	5–Lamp LED Array, Yellow, Rectangular
3153	1–104	165	5–Lamp LED Array, Red, Rectangular
3154	1–104	165	5–Lamp LED Array, Green, Rectangular
3155	1–104	165	5–Lamp LED Array, Yellow, Rectangular
3160	1–103	166	LED, Red, Rectangular
3161	1–103	166	LED, Green, Rectangular
3162	1–103	166	LED, Yellow, Rectangular
3163	1–103	167	LED, Red, Rectangular
3164	1–103	167	LED, Green, Rectangular
3165	1–103	167	LED, Yellow, Rectangular
3166	1–103	168	LED, Red, Rectangular
3167	1–103	168	LED, Green, Rectangular
3168	1–103	168	LED, Yellow, Rectangular
3169	1–103	407	LED, Red Diffused, Square
3170	1–103	407	LED, Green Diffused, Square
3171	1–103	407	LED, Yellow Diffused, Square
3180	1–103	417	LED, High Efficiency Red, Rectangular
3181	1–103	417	LED, Green Diffused, Rectangular
3182	1–103	417	LED, Yellow Diffused, Rectangular
3470	1–315	340	IC–Floppy Disk Read Amp
3880	1–315	299	IC–NMOS–8–Bit Microprocessor, 4MHz
3881	1–316	299	IC–NMOS–PIO, Parallel I/O Interface, 4MHz
3882	1–316	253	IC–NMOS–CTC, Counter Timer Control
4000	1–270	247	IC–CMOS, Dual 3–Input Plus Inverter NOR Gate
4001B	1–270	247	IC–CMOS, Quad 2–Input NOR Gate
4002B	1–270	247	IC–CMOS, Dual 4–Input NOR Gate

⇒ DENOTES NEW DEVICE

NTE PRODUCT NUMERICAL INDEX

NTE Type No.	Page No.	Diag. No.	Description
4006B	1–270	247	IC–CMOS, 18–Stage Static Shift Register
4007	1–270	247	IC–CMOS, Dual Complementary Pair Plus Inverter
4008B	1–270	249	IC–CMOS, 4–Bit Full Adder with Parallel Carry Out
⇒ 4009	1–270	248	IC CMOS, Hex Buffer/Converter (Inverting)
4011B	1–270	247	IC–CMOS, Quad 2–Input NAND Gate
4012B	1–270	247	IC–CMOS, Dual 4–Input NAND Gate
4013B	1–270	247	IC–CMOS, Dual D Type Flip–Flop
4014B	1–270	249	IC–CMOS, 8–Stage Shift Register Synchronous Parallel or Serial Input/ Serial Output
4015B	1–270	249	IC–CMOS, Dual 4–Stage Static Shift Register with Serial Input/Parallel Output
4016B	1–271	249	IC–CMOS, Quad Bilateral Switch for Transmission or Multiplexing of Analog or Digital Signals
4017B	1–271	249	IC–CMOS, Decade Counter with 10 Decoded Outputs
4018B	1–271	249	IC–CMOS, Presettable Divide–By–"N" Counter
4019B	1–271	249	IC–CMOS, Quad AND/OR Select Gate
4020B	1–271	249	IC–CMOS, 14–Stage Ripple–Carry Binary Counter/Divider
4021B	1–271	249	IC–CMOS, 8–Stage Static Shift Register Asynchronous Parallel Input or Synchronous Serial Input/Serial Output
4022B	1–271	249	IC–CMOS, Octal Counter/Divider with 8 Decoded Outputs
4023B	1–271	247	IC–CMOS, Triple 3–Input NAND Gate
4024B	1–271	247	IC–CMOS, 7–Stage Ripple–Carry Binary Counter/Divider
4025B	1–271	247	IC–CMOS, Triple 3–Input NOR Gate
4026B	1–271	249	IC–CMOS, Decade Counter/Divider with Decoded Seven–Segment Display Outputs & Display Ensemble
4027B	1–271	249	IC–CMOS, Dual J–K Master–Slave Flip–Flop
4028B	1–272	249	IC–CMOS, BCD–to–Decimal Decoder
4029B	1–272	249	IC–CMOS, Presettable Up/Down Counter, Binary or BCD Decade Decoder
4030B	1–272	247	IC–CMOS, Quad Exclusive–OR Gate
4031B	1–272	249	IC–CMOS, 64–Stage Static Shift Register
4032B	1–272	249	IC–CMOS, Triple Serial Positive Logic Adder
4033B	1–272	249	IC–CMOS, Decade Counter/Divider with Decoded Seven–Segment Display Outputs & Ripple Blanking
4034B	1–272	293	IC–CMOS, 8–Stage Static Bi–Directional Parallel/Serial Input/Output Bus Register
4035B	1–272	249	IC–CMOS, 4–Stage Parallel In/Parallel Out Shift Register with J–K Serial Input & True Complement Output
4038B	1–272	249	IC–CMOS, Triple Serial Negative Logic Adder
4040B	1–272	249	IC–CMOS, 12–Stage Ripple–Carry Binary Counter/Divider
4041	1–272	247	IC–CMOS, Quad True/Complement Buffer
4042B	1–272	249	IC–CMOS, Quad 3–State NOR R/S Latch
4043B	1–273	249	Quad, 3–State NOR R/S Latch
4044B	1–273	249	IC–CMOS, Quad 3–State NAND R/S Latch
4045B	1–273	249	IC–CMOS, 21–Stage Counter
4046B	1–273	248	IC–CMOS, Phase–Locked Loop (PLL)
4047B	1–273	247	IC–CMOS, Low–Power Monostable/ Astable Multivibrator
4048B	1–273	249	IC–CMOS, Multi–Function Expandable 8–Input Gate
4049	1–273	249	IC–CMOS, Hex Buffer/Converter, Inverting
4050B	1–273	249	IC–CMOS, Hex Buffer/Converter, Non–Inverting
4051B	1–273	249	IC–CMOS, Analog, Single 8–Channel Multiplexer/Demultiplexer
4052B	1–273	249	IC–CMOS, Analog, Differential 4–Channel
4053B	1–273	249	IC–CMOS, Triple 2–Channel
4055B	1–273	249	IC–CMOS, BCD–to–7–Segment Decoder/Driver with "Display–Frequency" Output
4056B	1–273	249	IC–CMOS, BCD–to–7–Segment Decoder/Divider with Strobed Latch Function
4060B	1–274	249	IC–CMOS 14–Stage Ripple–Carry Binary Counter/Divider & Oscillator
4063B	1–274	249	IC–CMOS, 4–Bit Magnitude Comparator– High–Voltage Type
4066B	1–274	247	IC–CMOS, Quad Bilateral Switch
4067B	1–274	343	IC–CMOS, Analog, Single 16–Channel Multiplexer/Demultiplexer
4068B	1–274	247	IC–CMOS, 8–Input NAND/AND Gate High Voltage Type
4069	1–274	247	IC–CMOS, Hex Inverter, High Voltage Type
4070B	1–274	247	IC–CMOS, Quad Exclusive–OR Gate
4071B	1–274	247	IC–CMOS, Dual 4–Input OR Gate
4072B	1–274	247	IC–CMOS, Dual 4–Input OR Gate
4073B	1–274	247	IC–CMOS, Triple 3–Input AND Gate
4075B	1–275	247	IC–CMOS, Triple 3–Input OR Gate
4076B	1–275	249	IC–CMOS, 4–Bit D–Type Register, High Voltage Type
4077B	1–275	247	IC–CMOS, Quad Exclusive–NOR Gate

⇒ DENOTES NEW DEVICE

NTE PRODUCT NUMERICAL INDEX

NTE Type No.	Page No.	Diag. No.	Description
4078B	1–275	247	IC–CMOS, 8–Input NOR/OR Gate
4081B	1–275	247	IC–CMOS, Quad 2–Input AND Gate
4082B	1–275	247	IC–CMOS, Dual 2–Wide, 2–Input AND–OR–INVERT Gate
4085B	1–275	247	IC–CMOS, Dual 2–Wide, 2–Input AND–OR–INVERT Gate
4086B	1–275	247	IC–CMOS, Expandable 4–Wide, 2–Input AND–OR–INVERT Gate
4089B	1–275	249	IC–CMOS, Binary Rate Multiplier
4093B	1–276	247	IC–CMOS, Quad 2–Input NAND Schmitt Trigger
4094B	1–276	249	IC–CMOS, 8–Stage Shift & Store Bus Register
4095B	1–276	247	IC–CMOS, Gated J–K Master–Slave Flip–Flop with Set–Reset Capability Non–Inverting J & K Inputs
4096B	1–276	247	IC–CMOS, Gated J–K Master–Slave Flip–Flop with Set–Reset Capability Inverting & Non–Inverting J & K Inputs
4097B	1–276	343	IC–MOS, Analog, Differential 8–Channel Multiplexer/Demultiplexer
4098B	1–276	249	IC–CMOS, Dual Monostable Multivibrator
4099B	1–276	249	IC–CMOS, 8–Bit Addressable Latch
4164	1–314	249	IC–NMOS, 64K Dynamic RAM, 150ns
4501	1–276	249	IC–CMOS, Dual 4–Input NAND Gate, 2–Input NOR/OR Gate, 8–Input AND/NAND Gate
4502B	1–276	249	IC–CMOS, Strobed Hex Inverter/Buffer
4503B	1–276	249	IC–CMOS, Hex 3–State Non–Inverting Buffer
4508B	1–277	343	IC–CMOS, Dual 4–Bit Latch
4510B	1–277	249	IC–CMOS, Presettable Up/Down BCD Counter
4511B	1–277	249	IC–CMOS, BCD–to–7–Segment Latch Decoder Driver
4512B	1–277	249	IC–CMOS, 8–Channel Data Selector
4513B	1–277	340	IC–CMOS, BCD–7–Segment
4514B	1–277	293	IC–CMOS, 4–Bit Latch/4–to–16 Decoder (Output "High" on Select)
4515B	1–277	293	IC–CMOS, 4–Bit Latch (Output "Low" on Select)
4516B	1–277	249	IC–CMOS, Presettable Up/Down Binary Counter
4517B	1–277	249	IC–CMOS, Dual 64–Stage Static Shift Register
4518B	1–277	249	IC–CMOS, Dual BCD Up–Counter
4520B	1–277	249	IC–CMOS, Dual Binary Up–Counter
4521B	1–277	249	24–Stage Frequency Divider
4522B	1–278	249	IC–CMOS, Programmable Divide–by–N 4–Bit BCD Counter
4526B	1–278	249	IC–CMOS, Programmable Divide–by–N 4–Bit Binary Counter
4527B	1–278	249	IC–CMOS, BCD Rate Multiplier
4528B	1–278	249	IC–CMOS, Dual Retriggerable/Resettable Monostable Multivibrator
4529B	1–278	249	IC–CMOS, Dual 4–Channel Analog Data Selector
4531B	1–278	249	IC–CMOS, 12–Bit Parity Tree
4532B	1–278	249	IC–CMOS, Bit Priority Encoder
4536B	1–278	249	IC–CMOS, Programmable Timer
4538B	1–278	249	IC–CMOS, Dual Precision Monostable Multivibrator
4539B	1–278	249	IC–CMOS, Dual 4–Channel Data Selector/Multiplexer
4541B	1–278	247	IC–CMOS, Programmable Timer
4543B	1–278	249	IC–CMOS, BCD–to–Seven–Segment Latch/Decoder/Driver for Liquid Crystals
4547B	1–278	249	IC–CMOS, High Current BCD–to–Seven Segment Decoder/Driver
4551B	1–279	249	IC–CMOS, Quad 2–Input Analog Multiplexer/Demultiplexer
4553B	1–279	249	IC–CMOS, 3–Digit BCD Counter
4555B	1–279	249	IC–CMOS, Dual Binary to 1–of–4 Decoder/Demultiplexer (Output "High" on Select)
4556B	1–279	249	IC–CMOS, Dual Binary to 1–of–4 Decoder /Demultiplexer (Output "Low" on Select)
4558B	1–279	249	IC–CMOS, BCD–to–Seven–Segment Decoder
4566B	1–279	249	IC–CMOS, Industrial Time Base Generator
4569B	1–279	249	IC–CMOS, Dual Programmable BCD Binary Counter
4583B	1–279	249	IC–CMOS, Dual Schmitt Trigger
4584B	1–279	249	IC–CMOS, Hex Schmitt Trigger
4585B	1–279	249	IC–CMOS, Magnitude Comparator
4597B	1–279	249	IC–CMOS, 8–Bit, Bus Compatible Counter Latch
4598B	1–279	340	IC–CMOS, 8–Bit, Bus Compatible Addressable Latch
4900	1–95	182	Zener Overvoltage Transient Suppressor, $V_R = 5.0V$
4902	1–95	183	Zener Overvoltage Transient Suppressor, $V_R = 5.8V$
4903	1–95	183	Zener Overvoltage Transient Suppressor, Bi–Directional, $V_R = 5.8V$
4918	1–95	183	Zener Overvoltage Transient Suppressor, $V_R = 11.1V$
4919	1–95	183	Zener Overvoltage Transient Suppressor, Bidirectional, $V_R = 11.1V$
4926	1–95	183	Zener Overvoltage Transient Suppressor, $V_R = 15.3V$
4927	1–95	183	Zener Overvoltage Transient Suppressor, Bidirectional, $V_R = 15.3V$
4928	1–95	183	Zener Overvoltage Transient Suppressor, $V_R = 17.1V$

⇒ DENOTES NEW DEVICE

NTE Type No.	Page No.	Diag. No.	Description
4929	1–95	183	Zener Overvoltage Transient Suppressor, Bidirectional, V_R = 17.1V
4934	1–95	183	Zener Overvoltage Transient Suppressor, V_R = 23.1V
4935	1–95	183	Zener Overvoltage Transient Suppressor, Bidirectional, V_R = 23.1V
4950	1–95	183	Zener Overvoltage Transient Suppressor, V_R = 43.6V
4951	1–95	183	Zener Overvoltage Transient Suppressor, Bidirectional, V_R = 43.6V
4958	1–95	183	Zener Overvoltage Transient Suppressor, V_R = 58.1V
4959	1–95	183	Zener Overvoltage Transient Suppressor, Bidirectional, V_R = 58.1V
4988	1–95	183	Zener Overvoltage Transient Suppressor, V_R = 171V
4989	1–95	183	Zener Overvoltage Transient Suppressor, Bidirectional, V_R = 171V
5000A thru 5010A	1–53	93	Zener Diode, 2.4V thru 5.1V, 1/2W, 5% Tol
5010T1	1–54	68	Zener Diode, 5.1V, 1/2W, 1% Tol
5011A	1–53	93	Zener Diode, 5.6V, 1/2W, 5% Tol
5011T1	1–54	68	Zener Diode, 5.6V, 1/2W, 1% Tol
5012A	1–53	93	Zener Diode, 6.0V, 1/2W, 5% Tol
5013A	1–53	93	Zener Diode, 6.2V, 1/2W, 5% Tol
5013T1	1–54	68	Zener Diode, 6.2V, 1/2W, 1% Tol
5014A	1–53	93	Zener Diode, 6.8V, 1/2W, 5% Tol
5015A	1–53	93	Zener Diode, 7.5V, 1/2W, 5% Tol
5016A	1–53	93	Zener Diode, 8.2V, 1/2W, 5% Tol
5017A	1–53	93	Zener Diode, 8.7V, 1/2W, 5% Tol
5018A	1–53	93	Zener Diode, 9.1V, 1/2W, 5% Tol
5019A	1–53	93	Zener Diode, 10V, 1/2W, 5% Tol
5019T1	1–54	68	Zener Diode, 11V, 1/2W, 5% Tol
5020A	1–53	93	Zener Diode, 11V, 1/2W, 5% Tol
5021A	1–53	93	Zener Diode, 12V, 1/2W, 5% Tol
5021T1	1–54	68	Zener Diode, 12V, 1/2W, 1% Tol
5022A thru 5060A	1–53	93	Zener Diode, 13V thru 200V, 1/2W, 5% Tol
5063A thru 5105A	1–53	67	Zener Diode, 2.7V thru 200V, 1W, 5% Tol
5111A thru 5166A	1–53	66	Zener Diode, 3.3V thru 200V, 5W, 5% Tol
5174A thru 5232A	1–53	65	Zener Diode, 3.9V thru 200V, 10W, 5% Tol, Anode Case, DO4
5174AK thru 5232AK	1–53	65	Zener Diode, 3.9V thru 200V, 10W, 5% Tol, Cathode Case, DO4
5240A thru 5296A	1–53	64	Zener Diode, 3.9V thru 200V, 50W, 5% Tol, Anode Case, DO5
5240AK thru 5296AK	1–53	64	Zener Diode, 3.9V thru 200V, 50W, 5% Tol, Cathode Case, DO5
5304	1–65	94	R–Si, Bridge, 400V, 1.5A, TO5 Style
5305	1–65	94	R–Si, Bridge, 600V, 1.5A, TO5 Style
5306	1–65	94	R–Si, Bridge, 800V, 1.5A, TO5 Style
5307	1–65	94	R–Si, Bridge, 1000V, 1.5A, TO5 Style
5309	1–65	415	R–Si, Bridge, 200V, 4A
5310	1–65	415	R–Si, Bridge, 600V, 4A
5311	1–65	415	R–Si, Bridge, 1000V, 4A
5312	1–65	107	R–Si, Bridge, 100V, 8A
5313	1–65	107	R–Si, Bridge, 200V, 8A
5314	1–65	107	R–Si, Bridge, 400V, 8A
5315	1–65	107	R–Si, Bridge, 600V, 8A
5316	1–65	107	R–Si, Bridge, 800V, 8A
5317	1–65	107	R–Si, Bridge, 1000V, 8A
5318	1–65	554	R–Si, Bridge, 200V, 4A
5319	1–65	554	R–Si, Bridge, 600V, 4A
5320	1–65	554	R–Si, Bridge, 1000V, 4A
5322	1–65	95	R–Si, Bridge, 200V, 25A
5322W	1–65	440	R–Si, Bridge, 200V, 25A (Wire Leads)
5324	1–65	95	R–Si, Bridge 400V, 25A
5326	1–65	95	R–Si, Bridge, 600V, 25A
5326W	1–65	440	R–Si, Bridge, 600V, 25A (Wire Leads)
5327	1–65	95	R–Si, Bridge, 800V, 25A
5327W	1–65	440	R–Si, Bridge, 800V, 25A (Wire Leads)
5328	1–65	95	R–Si, Bridge, 1000V, 25A
5328W	1–65	440	R–Si, Bridge, 1000V, 25A (Wire Leads)
5329	1–65	439	R–Si, Bridge, 200V, 6A
5330	1–65	439	R–Si, Bridge, 600V, 6A
⇒ 5331	1–65	439	R–Si, Bridge, 1000V, 6A
5332	1–65	106	R–Si, Bridge, 600V, 1A, 4–Lead DIP
5334	1–65	106	R–Si, Bridge, 1000V, 1A, 4–Lead DIP
⇒ 5335	1–65	473	R–Si, Bridge, 3 Phase, 600V, 60A
⇒ 5338	1–65	473	R–Si, Bridge, 3 Phase, 600V, 100A
5340	1–65	108	R–Si, Bridge, 200V, 40A
5342	1–65	108	R–Si, Bridge, 600V, 40A
5344	1–65	108	R–Si, Bridge, 1000V, 40A
5346	1–65	421	R–Si, Bridge, 600V, 80A
5348	1–65	421	R–Si, Bridge, 600V, 100A
5351	1–76	6b	SCR–High Speed, 600V_{RM}, 5A

⇒ DENOTES NEW DEVICE

NTE PRODUCT NUMERICAL INDEX

NTE Type No.	Page No.	Diag. No.	Description
5360	1–76	111b	SCR–High Speed, 600V_{RM}, 35A
5368	1–76	115	SCR–High Speed, 600V_{RM}, 125A
5369	1–76	115	SCR–High Speed, 1200V_{RM}, 125A
5371	1–76	114	SCR–High Speed, 600V_{RM}, 125A
5372	1–76	114	SCR–High Speed, 1200V_{RM}, 125A
5374	1–76	116	SCR–High Speed, 600V_{RM}, 275A
5375	1–76	116	SCR–High Speed, 1200V_{RM}, 275A
5377	1–76	177	SCR–High Speed, 600V_{RM}, 475A
5378	1–76	177	SCR–High Speed, 1200V_{RM}, 475A
5380	1–76	347	SCR–High Speed, 600V_{RM}, 400A, Hockey Puck
5381	1–76	347	SCR–High Speed, 1200V_{RM}, 400A, Hockey Puck
5386	1–76	346	SCR–High Speed, 600V_{RM}, 700A, Hockey Puck
5387	1–76	346	SCR–High Speed, 1200V_{RM}, 700A, Hockey Puck
5400	1–73	9m	SCR–30V_{RM}, 0.8A, Sensitive Gate
5401	1–73	9m	SCR–60V_{RM}, 0.8A, Sensitive Gate
5402	1–73	9m	SCR–100V_{RM}, 0.8A, Sensitive Gate
5403	1–73	9m	SCR–150V_{RM}, 0.8A, Sensitive Gate
5404	1–73	9m	SCR–200V_{RM}, 0.8A, Sensitive Gate
5405	1–73	9m	SCR–400V_{RM}, 0.8A, Sensitive Gate
5406	1–73	9m	SCR–600V_{RM}, 0.8A, Sensitive Gate
5408	1–73	25c	SCR–200V_{RM}, 3A, Sensitive Gate
5409	1–73	25c	SCR–400V_{RM}, 3A, Sensitive Gate
5410	1–73	25c	SCR–600V_{RM}, 3A, Sensitive Gate
5411	1–73	7c	SCR–30V_{RM}, 4.0A, Sensitive Gate
5412	1–73	7c	SCR–60V_{RM}, 4.0A, Sensitive Gate
5413	1–73	7c	SCR–100V_{RM}, 4.0A, Sensitive Gate
5414	1–73	7c	SCR–200V_{RM}, 4.0A, Sensitive Gate
5415	1–73	7c	SCR–200V_{RM}, 4.0A, Sensitive Gate
5416	1–73	7c	SCR–600V_{RM}, 4.0A, Sensitive Gate
5417	1–74	11d	SCR–200V_{RM}, 10A, Sensitive Gate
5418	1–74	11d	SCR–400V_{RM}, 10A, Sensitive Gate
5419	1–74	11d	SCR–600V_{RM}, 10A, Sensitive Gate
5424	1–77	11e	SCR, 400V_{RM}, 4.7A, High Speed
5426	1–74	11d	SCR–400V_{RM}, 10A, Sensitive Gate
5427	1–73	25c	SCR–200V_{RM}, 7A
5428	1–73	25c	SCR–400V_{RM}, 7A
5429	1–73	25c	SCR–600V_{RM}, 7A
5437	1–73	11e	SCR–400V_{RM}, 8A, Sensitive Gate
5438	1–73	11e	SCR–600V_{RM}, 8A, Sensitive Gate
5442	1–73	33b	SCR–50V_{RM}, 8.0A, Sensitive Gate
5444	1–73	33b	SCR–200V_{RM}, 8.0A, Sensitive Gate
5446	1–73	33b	SCR–400V_{RM}, 8.0A, Sensitive Gate
5448	1–73	33b	SCR–600V_{RM}, 8.0A, Sensitive Gate
5452	1–73	10f	SCR–30V_{RM}, 4.0A, Sensitive Gate
5453	1–73	10f	SCR–50V_{RM}, 4.0A, Sensitive Gate
5454	1–73	10f	SCR–100V_{RM}, 4.0A, Sensitive Gate
5455	1–73	10f	SCR–200V_{RM}, 4.0A, Sensitive Gate
5456	1–73	10f	SCR–300V_{RM}, 4.0A, Sensitive Gate
5457	1–73	10f	SCR–400V_{RM}, 4.0A, Sensitive Gate
5458	1–73	10f	SCR–600V_{RM}, 4.0A, Sensitive Gate
5461	1–73	11e	SCR–50V_{RM}, 10A
5462	1–73	11e	SCR–100V_{RM}, 10A
5463	1–73	11e	SCR–200V_{RM}, 10A
5465	1–73	11e	SCR–400V_{RM}, 10A
5466	1–73	11e	SCR–600V_{RM}, 10A
5468	1–73	11e	SCR–800V_{RM}, 10A
5470	1–73	110b	SCR–50V_{RM}, 5.0A
5471	1–73	110b	SCR–100V_{RM}, 5.0A
5472	1–73	110b	SCR–200V_{RM}, 5.0A
5473	1–73	110b	SCR–300V_{RM}, 5.0A
5474	1–73	110b	SCR–400V_{RM}, 5.0A
5475	1–73	110b	SCR–500V_{RM}, 5.0A
5476	1–73	110b	SCR–600V_{RM}, 5.0A
5480	1–73	110b	SCR–25V_{RM}, 8.0A
5481	1–73	110b	SCR–50V_{RM}, 8.0A
5482	1–73	110b	SCR–100V_{RM}, 8.0A
5483	1–73	110b	SCR–200V_{RM}, 8.0A
5484	1–73	110b	SCR–300V_{RM}, 8.0A
5485	1–73	110b	SCR–400V_{RM}, 8.0A
5486	1–73	110b	SCR–500V_{RM}, 8.0A
5487	1–73	110b	SCR–600V_{RM}, 8.0A
5491	1–74	111b	SCR–100V_{RM}, 10A
5492	1–74	111b	SCR–200V_{RM}, 10A
5494	1–74	111b	SCR–400V_{RM}, 10A
5496	1–74	111b	SCR–600V_{RM}, 10A
5500	1–74	111b	SCR–25V_{RM}, 16A
5501	1–74	111b	SCR–50V_{RM}, 16A
5502	1–74	111b	SCR–100V_{RM}, 16A
5503	1–74	111b	SCR–150V_{RM}, 16A
5504	1–74	111b	SCR–200V_{RM}, 16A
5505	1–74	111b	SCR–250V_{RM}, 16A
5506	1–74	111b	SCR–300V_{RM}, 16A
5507	1–74	111b	SCR–400V_{RM}, 16A
5508	1–74	111b	SCR–500V_{RM}, 16A
5509	1–74	111b	SCR–600V_{RM}, 16A
5511	1–73	6b	SCR–200V_{RM}, 5.0A
5512	1–73	6b	SCR–400V_{RM}, 5.0A
5513	1–73	6b	SCR–600V_{RM}, 5.0A

⇒ DENOTES NEW DEVICE

NTE PRODUCT NUMERICAL INDEX

NTE Type No.	Page No.	Diag. No.	Description
5514	1–74	112	SCR–200V_{RM}, 20A
5515	1–74	112	SCR–400V_{RM}, 20A
5516	1–74	112	SCR–600V_{RM}, 20A
5517	1–74	112	SCR–200V_{RM}, 35A
5518	1–74	112	SCR–400V_{RM}, 35A
5519	1–74	112	SCR–600V_{RM}, 35A
5520	1–74	111b	SCR–25V_{RM}, 25A
5521	1–74	111b	SCR–50V_{RM}, 25A
5522	1–74	111b	SCR–100V_{RM}, 25A
5523	1–74	111b	SCR–150V_{RM}, 25A
5524	1–74	111b	SCR–200V_{RM}, 25A
5525	1–74	111b	SCR–250V_{RM}, 25A
5526	1–74	111b	SCR–300V_{RM}, 25A
5527	1–74	111b	SCR–400V_{RM}, 25A
5528	1–74	111b	SCR–500V_{RM}, 25A
5529	1–74	111b	SCR–600V_{RM}, 25A
5530	1–74	111b	SCR–700V_{RM}, 25A
5531	1–74	111b	SCR–800V_{RM}, 25A
5534	1–75	382	SCR–600V_{RM}, 65A
⇒ 5536	1–75	11e	SCR–800V_{RM}, 40A
⇒ 5538	1–75	55c	SCR–800V_{RM}, 50A, TO218 Isolated
⇒ 5539	1–75	55c	SCR–400V_{RM}, 55A
⇒ 5540	1–75	55c	SCR–800V_{RM}, 55A
5541	1–74	111b	SCR–50V_{RM}, 35A
5542	1–74	111b	SCR–100V_{RM}, 35A
5543	1–74	111b	SCR–200V_{RM}, 35A
5544	1–74	111b	SCR–300V_{RM}, 35A
5545	1–74	111b	SCR–400V_{RM}, 35A
5546	1–74	111b	SCR–500V_{RM}, 35A
5547	1–74	111b	SCR–600V_{RM}, 35A
5548	1–74	111b	SCR–800V_{RM}, 35A
5550	1–74	11e	SCR–50V_{RM}, 25A
5552	1–74	11e	SCR–200V_{RM}, 25A
5554	1–74	11e	SCR–400V_{RM}, 25A
5556	1–74	11e	SCR–600V_{RM}, 25A
5558	1–74	11e	SCR–800V_{RM}, 25A
5562	1–74	113a	SCR–200V_{RM}, 35A
5564	1–74	113a	SCR–400V_{RM}, 35A
5566	1–74	113a	SCR–600V_{RM}, 35A
5567	1–75	117	SCR–200V_{RM}, 80A
5568	1–75	117	SCR–600V_{RM}, 80A
5569	1–75	117	SCR–120V_{RM}, 80A
5570	1–75	114	SCR–200V_{RM}, 125A
5572	1–75	114	SCR–600V_{RM}, 125A
5574	1–75	114	SCR–1200V_{RM}, 125A
5575	1–75	115	SCR–200V_{RM}, 125A
5577	1–75	115	SCR–1600V_{RM}, 125A
5579	1–75	115	SCR–1200V_{RM}, 125A
5580	1–75	116	SCR–200V_{RM}, 275A
5582	1–75	116	SCR–600V_{RM}, 275A
5584	1–75	116	SCR–1200V_{RM}, 275A
5587	1–75	177	SCR–600V_{RM}, 550A
5589	1–75	177	SCR–1200V_{RM}, 550A
5590	1–75	347	SCR–200V_{RM}, 470A
5591	1–75	347	SCR–600V_{RM}, 470A
5592	1–75	347	SCR–1200V_{RM}, 470A
5594	1–75	346	SCR–200V_{RM}, 850A
5595	1–75	346	SCR–600V_{RM}, 850A
5596	1–75	346	SCR–1200V_{RM}, 850A
5598	1–75	404	SCR–600V_{RM}, 1880A
5599	1–75	404	SCR–1200V_{RM}, 1880A
5600	1–79	7b	TRIAC–25V_{RM}, 4A
5601	1–79	7b	TRIAC–50V_{RM}, 4A
5602	1–79	7b	TRIAC–100V_{RM}, 4A
5603	1–79	7b	TRIAC–200V_{RM}, 4A
5604	1–79	7b	TRIAC–300V_{RM}, 4A
5605	1–79	7b	TRIAC–500V_{RM}, 4A
5606	1–79	7b	TRIAC–500V_{RM}, 4A
5607	1–79	7b	TRIAC, 600V_{RM}, 4A
5608	1–79	11j	TRIAC–400V_{RM}, 8A
5609	1–79	11j	TRIAC–600V_{RM}, 8A
5610	1–79	11j	TRIAC–800V_{RM}, 8A
5611	1–79	33c	TRIAC–25V_{RM}, 10A
5612	1–79	33c	TRIAC–50V_{RM}, 10A
5613	1–79	33c	TRIAC–100V_{RM}, 10A
5614	1–79	33c	TRIAC–200V_{RM}, 10A
5615	1–79	33c	TRIAC–300V_{RM}, 10A
5617	1–79	33c	TRIAC–500V_{RM}, 10A
5618	1–79	33c	TRIAC–600V_{RM}, 10A
⇒ 5620	1–79	491	TRIAC–800V_{RM}, 8A, Isol Full Pack
5621	1–79	33c	TRIAC–25V_{RM}, 10A
5622	1–79	33c	TRIAC–50V_{RM}, 10A
5623	1–79	33c	TRIAC–100V_{RM}, 10A
5627	1–79	33c	TRIAC–500V_{RM}, 10A
5629	1–79	10g	TRIAC–400V_{RM}, 4A
5631	1–79	11j	TRIAC–50V_{RM}, 10A
5632	1–79	11j	TRIAC–100V_{RM}, 10A
5633	1–79	11j	TRIAC–200V_{RM}, 10A
5634	1–79	11j	TRIAC–300V_{RM}, 10A
5635	1–79	11j	TRIAC–400V_{RM}, 10A

⇒ DENOTES NEW DEVICE

NTE Type No.	Page No.	Diag. No.	Description
5636	1–79	11j	TRIAC–500V_{RM}, 10A
5637	1–79	11j	TRIAC–600V_{RM}, 10A
5638	1–79	11k	TRIAC–400V_{RM}, 8A, Isolated Tab
5640	1–79	25b	TRIAC–100V_{RM}, 8A, Isolated Tab
5641	1–79	25b	TRIAC–200V_{RM}, 2.5A
5642	1–79	25b	TRIAC–400V_{RM}, 2.5A
5643	1–79	25b	TRIAC–600V_{RM}, 2.5A
5645	1–79	11k	TRIAC–600V_{RM}, 10A, Isolated Tab
5646	1–80	11k	TRIAC–600V_{RM}, 10A, w/Internal Trigger DIAC, Isolated Tab
5650	1–79	25b	TRIAC–100V_{RM}, 2.5A
5651	1–79	25b	TRIAC–200V_{RM}, 2.5A
5652	1–79	25b	TRIAC–400V_{RM}, 2.5A
5653	1–79	25b	TRIAC–600V_{RM}, 2.5A
5655	1–79	9n	TRIAC–200V_{RM}, 0.8A
5656	1–79	9n	TRIAC–400V_{RM}, 0.8A
5657	1–79	9n	TRIAC–600V_{RM}, 0.8A
5661	1–79	110a	TRIAC–50V_{RM}, 10A
⇒ 5671	1–79	491	TRIAC–800V_{RM}, 20A, Isol Full Pack
5673	1–79	111a	TRIAC–200V_{RM}, 15A
5675	1–79	111a	TRIAC–400V_{RM}, 15A
5676	1–79	111a	TRIAC–500V_{RM}, 15A
5677	1–79	111a	TRIAC–600V_{RM}, 15A
5679	1–80	178	TRIAC–600V_{RM}, 40A
5680	1–79	111a	TRIAC–25V_{RM}, 25A
5681	1–79	111a	TRIAC–50V_{RM}, 25A
5682	1–79	111a	TRIAC–100V_{RM}, 25A
5683	1–79	111a	TRIAC–200V_{RM}, 25A
5684	1–79	111a	TRIAC–300V_{RM}, 25A
5685	1–79	111a	TRIAC–400V_{RM}, 25A
5686	1–79	111a	TRIAC–500V_{RM}, 25A
5687	1–79	111a	TRIAC–600V_{RM}, 25A
5688	1–80	397	TRIAC–200V_{RM}, 40A
5689	1–80	397	TRIAC–400V_{RM}, 40A
5690	1–80	397	TRIAC–600V_{RM}, 40A
5693	1–80	111a	TRIAC–200V_{RM}, 40A
5695	1–80	111a	TRIAC–400V_{RM}, 40A
5697	1–80	111a	TRIAC–600V_{RM}, 40A
⇒ 5699	1–80	491	TRIAC–800V_{RM}, 25A, Isol Full Pack
5700	1–86	452b	Industrial Power Module, 1200V, 28A
5701	1–86	452c	Industrial Power Module, 1200V 28A
5702	1–86	452a	Industrial Power Module, 1200V, 28A
5703	1–86	452d	Industrial Power Module, 1200V, 28A
5704	1–86	452e	Industrial Power Module, 1200V, 28A
5705	1–86	452f	Industrial Power Module, 1200V, 28A
5710	1–85	422a	Thyristor Power Module, 1200V, 120A
5711	1–85	422b	Thyristor Power Module, 1200V, 120A
5712	1–85	422c	Thyristor Power Module, 1200V, 120A
5720	1–85	422a	Thyristor Power Module, 1200V, 150A
5721	1–85	422b	Thyristor Power Module, 1200V, 150A
5722	1–85	422c	Thyristor Power Module, 1200V, 150A
5800	1–66	541	R–50P_{RV}, 3A, Axial Lead
5801	1–66	541	R–100P_{RV}, 3A, Axial Lead
5802	1–66	541	R–200P_{RV}, 3A, Axial Lead
5803	1–66	541	R–300P_{RV}, 3A, Axial Lead
5804	1–66	541	R–400P_{RV}, 3A, Axial Lead
5805	1–66	541	R–500P_{RV}, 3A, Axial Lead
5806	1–66	541	R–600P_{RV}, 3A, Axial Lead
5808	1–66	541	R–800P_{RV}, 3A, Axial Lead
5809	1–66	541	R–1000P_{RV}, 3A, Axial Lead
5812	1–66	351	R–100P_{RV}, 6A, Axial Lead
5814	1–66	351	R–400P_{RV}, 6A, Axial Lead
5815	1–66	351	R–600P_{RV}, 6A, Axial Lead
5817	1–66	351	R–1000P_{RV}, 6A, Axial Lead
5818	1–68	65	R–Fast Recovery, 200P_{RV}, 12A, 200ns, Cathode Case
5819	1–68	65	R–Fast Recovery, 200P_{RV}, 12A, 200ns, Anode Case
5820	1–68	65	R–Fast Recovery, 400P_{RV}, 12A, 200ns, Cathode Case
5821	1–68	65	R–Fast Recovery, 400P_{RV}, 12A, 200ns, Anode Case
5822	1–68	65	R–Fast Recovery, 600P_{RV}, 12A, 200ns, Cathode Case
5823	1–68	65	R–Fast Recovery, 600P_{RV}, 12A, 200ns, Anode Case
5826	1–67	120	R–400P_{RV}, 50A, Cathode Case, Press Fit
5827	1–67	120	R–400P_{RV}, 50A, Anode Case, Press Fit
5828	1–67	120	R–800P_{RV}, 50A, Cathode Case, Press Fit
5829	1–67	120	R–800P_{RV}, 50A, Anode Case, Press Fit
5830	1–66	65	R–50P_{RV}, 3A, Cathode Case
5831	1–66	65	R–50P_{RV}, 3A, Anode Case
5832	1–66	65	R–100P_{RV}, 3A, Cathode Case
5833	1–66	65	R–100P_{RV}, 3A, Anode Case
5834	1–66	65	R–200P_{RV}, 3A, Cathode Case
5835	1–66	65	R–200P_{RV}, 3A, Anode Case
5836	1–66	65	R–300P_{RV}, 3A, Cathode Case
5837	1–66	65	R–300P_{RV}, 3A, Anode Case
5838	1–66	65	R–400P_{RV}, 3A Cathode Case
5839	1–66	65	R–400P_{RV}, 3A, Anode Case
5840	1–66	65	R–500P_{RV}, 3A, Cathode Case
5841	1–66	65	R–500P_{RV}, Anode Case
5842	1–66	65	R–600P_{RV}, 3A, Cathode Case

⇒ DENOTES NEW DEVICE

NTE PRODUCT NUMERICAL INDEX

NTE Type No.	Page No.	Diag. No.	Description
5843	1–66	65	R–600P_{RV}, 3A, Anode Case
5846	1–66	65	R–800P_{RV}, 3A, Cathode Case
5847	1–66	65	R–800P_{RV}, 3A, Anode Case
5848	1–66	65	R–1000P_{RV}, 3A, Cathode Case
5849	1–66	65	R–1000P_{RV}, 3A, Anode Case
5850	1–66	65	R–50P_{RV}, 6A, Cathode Case
5851	1–66	65	R–50P_{RV}, 6A, Anode Case
5852	1–66	65	R–100P_{RV}, 6A, Cathode Case
5853	1–66	65	R–100P_{RV}, 6A, Anode Case
5854	1–66	65	R–200P_{RV}, 6A, Cathode Case
5855	1–66	65	R–200P_{RV}, 6A, Anode Case
5856	1–66	65	R–300P_{RV}, 6A, Cathode Case
5857	1–66	65	R–300P_{RV}, 6A, Anode Case
5858	1–66	65	R–400P_{RV}, 6A, Cathode Case
5859	1–66	65	R–400P_{RV}, 6A, Anode Case
5860	1–66	65	R–500P_{RV}, 6A, Cathode Case
5861	1–66	65	R–500P_{RV}, 6A, Anode Case
5862	1–66	65	R–600P_{RV}, 6A, Cathode Case
5863	1–66	65	R–600P_{RV}, 6A, Anode Case
5866	1–66	65	R–800P_{RV}, 6A, Cathode Case
5867	1–66	65	R–800P_{RV}, 6A, Anode Case
5868	1–66	65	R–1000P_{RV}, 6A, Cathode Case
5869	1–66	65	R–1000P_{RV}, 6A, Anode Case
5870	1–66	65	R–50P_{RV}, 12A, Cathode Case
5871	1–66	65	R–50P_{RV}, 12A, Anode Case
5872	1–66	65	R–100P_{RV}, 12A, Cathode Case
5873	1–66	65	R–100P_{RV}, 12A, Anode Case
5874	1–66	65	R–200P_{RV}, 12A, Cathode Case
5875	1–66	65	R–200P_{RV}, 12A, Anode Case
5876	1–66	65	R–300P_{RV}, 12A, Cathode Case
5877	1–66	65	R–300P_{RV}, 12A, Anode Case
5878	1–66	65	R–400P_{RV}, 12A, Cathode Case
5879	1–66	65	R–400P_{RV}, 12A, Anode Case
5880	1–66	65	R–500P_{RV}, 12A, Cathode Case
5881	1–66	65	R–500P_{RV}, 12A, Anode Case
5882	1–66	65	R–600P_{RV}, 12A, Cathode Case
5883	1–66	65	R–600P_{RV}, 12A, Anode Case
5886	1–66	65	R–800P_{RV}, 12A, Cathode Case
5887	1–66	65	R–800P_{RV}, 12A, Anode Case
5890	1–66	65	R–1000P_{RV}, 12A, Cathode Case
5891	1–66	65	R–1000P_{RV}, 12A, Anode Case
5892	1–66	65	R–50P_{RV}, 16A, Cathode Case
5893	1–66	65	R–50P_{RV}, 16A, Anode Case
5894	1–66	65	R–100P_{RV}, 16A, Cathode Case
5895	1–66	65	R–100P_{RV}, 16A, Anode Case
5896	1–66	65	R–200P_{RV}, 16A, Cathode Case
5897	1–66	65	R–200P_{RV}, 16A, Anode Case
5898	1–66	65	R–300P_{RV}, 16A, Cathode Case
5899	1–66	65	R–300P_{RV}, 16A, Anode Case
5900	1–66	65	R–400P_{RV}, 16A, Cathode Case
5901	1–66	65	R–400P_{RV}, 16A, Anode Case
5902	1–66	65	R–500P_{RV}, 16A, Cathode Case
5903	1–66	65	R–500P_{RV}, 16A, Anode Case
5904	1–66	65	R–600P_{RV}, 16A, Cathode Case
5905	1–66	65	R–600P_{RV}, 16A, Anode Case
5908	1–66	65	R–800P_{RV}, 16A, Cathode Case
5909	1–66	65	R–800P_{RV}, 16A, Anode Case
5910	1–66	65	R–1000P_{RV}, 16A, Cathode Case
5911	1–66	65	R–1000P_{RV}, 16A, Anode Case
5912	1–66	65	R–50P_{RV}, 20A, Cathode Case
5913	1–66	65	R–50P_{RV}, 20A, Anode Case
5914	1–66	65	R–100P_{RV}, 20A, Cathode Case
5915	1–66	65	R–100P_{RV}, 20A, Anode Case
5916	1–66	65	R–200P_{RV}, 20A, Cathode Case
5917	1–66	65	R–200P_{RV}, 20A, Anode Case
5918	1–66	65	R–300P_{RV}, 20A, Cathode Case
5919	1–66	65	R–300P_{RV}, 20A, Anode Case
5920	1–66	65	R–400P_{RV}, 20A, Cathode Case
5921	1–66	65	R–400P_{RV}, 20A, Anode Case
5922	1–66	65	R–500P_{RV}, 20A, Cathode Case
5923	1–66	65	R–500P_{RV}, 20A, Anode Case
5924	1–66	65	R–600P_{RV}, 20A, Cathode Case
5925	1–66	65	R–600P_{RV}, 20A, Anode Case
5928	1–66	65	R–800P_{RV}, 20A, Cathode Case
5929	1–66	65	R–800P_{RV}, 20A, Anode Case
5932	1–66	65	R–1000P_{RV}, 20A, Cathode Case
5933	1–66	65	R–1000P_{RV}, 20A, Anode Case
5940	1–66	64	R–50P_{RV}, 15A, Cathode Case
5941	1–66	64	R–50P_{RV}, 15A, Anode Case
5942	1–66	64	R–100P_{RV}, 15A, Cathode Case
5943	1–66	64	R–100P_{RV}, 15A, Anode Case
5944	1–66	64	R–200P_{RV}, 15A, Cathode Case
5945	1–66	64	R–200P_{RV}, 15A, Anode Case
5946	1–66	64	R–300P_{RV}, 15A, Cathode Case
5947	1–66	64	R–300P_{RV}, 15A, Anode Case
5948	1–66	64	R–400P_{RV}, 15A, Cathode Case
5949	1–66	64	R–400P_{RV}, 15A, Anode Case
5950	1–66	64	R–500P_{RV}, 15A, Cathode Case
5951	1–66	64	R–500P_{RV}, 15A, Anode Case
5952	1–66	64	R–600P_{RV}, 15A, Cathode Case
5953	1–66	64	R–600P_{RV}, 15A, Anode Case

⇒ DENOTES NEW DEVICE

NTE Type No.	Page No.	Diag. No.	Description
5962	1–66	121	R–400P_{RV}, 25A, Cathode Case, Press Fit
5963	1–66	121	R–400P_{RV}, 25A, Anode Case, Press Fit
5966	1–66	121	R–800P_{RV}, 25A, Cathode Case, Press Fit
5967	1–66	121	R–800P_{RV}, 25A, Anode Case, Press Fit
5980	1–66	64	R–50P_{RV}, 40A, Cathode Case
5981	1–66	64	R–50P_{RV}, 40A, Anode Case
5982	1–66	64	R–100P_{RV}, 40A, Cathode Case
5983	1–66	64	R–100P_{RV}, 40A, Anode Case
5986	1–66	64	R–200P_{RV}, 40A, Cathode Case
5987	1–66	64	R–200P_{RV}, 40A, Anode Case
5988	1–66	64	R–300P_{RV}, 40A, Cathode Case
5989	1–66	64	R–300P_{RV}, 40A, Anode Case
5990	1–66	64	R–400P_{RV}, 40A, Cathode Case
5991	1–66	64	R–400P_{RV}, 40A, Anode Case
5992	1–66	64	R–500P_{RV}, 40A, Cathode Case
5993	1–66	64	R–500P_{RV}, 40A, Anode Case
5994	1–66	64	R–600P_{RV}, 40A, Cathode Case
5995	1–66	64	R–600P_{RV}, 40A, Anode Case
5998	1–66	64	R–800P_{RV}, 40A, Cathode Case
5999	1–66	64	R–800P_{RV}, 40A, Anode Case
6002	1–66	64	R–1000P_{RV}, 40A, Cathode Case
6003	1–66	64	R–1000P_{RV}, 40A, Anode Case
6006	1–68	64	R–Fast Recovery, 200P_{RV}, 40A, 200ns, Cathode Case
6007	1–68	64	R–Fast Recovery, 200P_{RV}, 40A, 200ns, Anode Case
6008	1–68	64	R–Fast Recovery, 400P_{RV}, 40A, 200ns, Cathode Case
6009	1–68	64	R–Fast Recovery, 400P_{RV}, 40A, 200ns, Anode Case
6010	1–68	64	R–Fast Recovery, 600P_{RV}, 40A, 200ns, Cathode Case
6011	1–68	64	R–Fast Recovery, 600P_{RV}, 40A, 200ns, Anode Case
6020	1–67	64	R–50P_{RV}, 60A, Cathode Case
6021	1–67	64	R–50P_{RV}, 60A, Anode Case
6022	1–67	64	R–100P_{RV}, 60A, Cathode Case
6023	1–67	64	R–100P_{RV}, 60A, Anode Case
6026	1–67	64	R–200P_{RV}, 60A, Cathode Case
6027	1–67	64	R–200P_{RV}, 60A, Anode Case
6030	1–67	64	R–300P_{RV}, 60A, Cathode Case
6031	1–67	64	R–300P_{RV}, 60A, Anode Case
6034	1–67	64	R–400P_{RV}, 60A, Cathode Case
6035	1–67	64	R–400P_{RV}, 60A, Anode Case
6038	1–67	64	R–500P_{RV}, 60A, Cathode Case
6039	1–67	64	R–500P_{RV}, 60A, Anode Case
6040	1–67	64	R–600P_{RV}, 60A, Cathode Case
6041	1–67	64	R–600P_{RV}, 60A, Anode Case
6042	1–67	64	R–800P_{RV}, 60A, Cathode Case
6043	1–67	64	R–800P_{RV}, 60A, Anode Case
6044	1–67	64	R–1000P_{RV}, 60A, Cathode Case
6045	1–67	64	R–1000P_{RV}, 60A, Anode Case
6048	1–67	64	R–50P_{RV}, 70A, Cathode Case
6049	1–67	64	R–50P_{RV}, 70A, Anode Case
6050	1–67	64	R–100P_{RV}, 70A, Cathode Case
6051	1–67	64	R–100P_{RV}, 70A, Anode Case
6054	1–67	64	R–200P_{RV}, 70A, Cathode Case
6055	1–67	64	R–200P_{RV}, 70A, Anode Case
6058	1–67	64	R–300P_{RV}, 70A, Cathode Case
6059	1–67	64	R–300P_{RV}, 70A, Anode Case
6060	1–67	64	R–400P_{RV}, 70A, Cathode Case
6061	1–67	64	R–400P_{RV}, 70A, Anode Case
6064	1–67	64	R–600P_{RV}, 70A, Cathode Case
6065	1–67	64	R–600P_{RV}, 70A, Anode Case
6068	1–67	64	R–800P_{RV}, 70A, Cathode Case
6069	1–67	64	R–800P_{RV}, 70A, Anode Case
6072	1–67	64	R–1000P_{RV}, 70A, Cathode Case
6073	1–67	64	R–1000P_{RV}, 70A, Anode Case
6074	1–67	64	R–200P_{RV}, 85A, Cathode Case
6075	1–67	64	R–200P_{RV}, 85A, Anode Case
6076	1–67	64	R–600P_{RV}, 85A, Cathode Case
6077	1–67	64	R–600P_{RV}, 85A, Anode Case
6078	1–67	64	R–1200P_{RV}, 85A, Cathode Case
6079	1–67	64	R–1200P_{RV}, 85A, Anode Case
6084	1–68	65	R–Schottky Barrier, 45P_{RV}, 35A, Cathode Case
6085	1–51	502a	R–Dual Center Tap Schottky, 16A, 45V
6087	1–51	502a	R–Dual Center Tap Schottky, 30A, 45V
6090	1–51	59d/ 503	R–Dual Center Tap Schottky, 30A, 45V
6094	1–68	64	R–Schottky Barrier, 45P_{RV}, 60A, Cathode Case
6102	1–67	390	R–600P_{RV}, 550A, Cathode Case
6103	1–67	390	R–600P_{RV}, 550A, Anode Case
6104	1–67	390	R–1200P_{RV}, 550A, Cathode Case
6105	1–67	390	R–1600P_{RV}, 450A, Cathode Case
6107	1–67	390	R–1600P_{RV}, 450A, Anode Case
6110	1–67	389	R–600P_{RV}, 500A
6112	1–67	389	R–1200P_{RV}, 500A
6113	1–67	388	R–600P_{RV}, 1200A

⇒ DENOTES NEW DEVICE

NTE PRODUCT NUMERICAL INDEX

NTE Type No.	Page No.	Diag. No.	Description
6115	1–67	388	R–1200P_{RV}, 1200A
6116	1–67	387	R–600P_{RV}, 2200A
6118	1–67	387	R–1200P_{RV}, 2200A
6154	1–67	122	R–400P_{RV}, 150A, Cathode Case
6155	1–67	122	R–400P_{RV}, 150A, Anode Case
6156	1–67	122	R–600P_{RV}, 150A, Cathode Case
6157	1–67	122	R–600P_{RV}, 150A, Anode Case
6158	1–67	122	R–1000P_{RV}, 150A, Cathode Case
6159	1–67	122	R–1400P_{RV}, 150A, Anode Case
6162	1–67	122	R–1400P_{RV}, 150A, Cathode Case
6163	1–67	122	R–1400P_{RV}, 150A, Anode Case
6200	1–51	396	R–200P_{RV}, 30A, Cathode Case
6202	1–51	396	R–400P_{RV}, 30A, Cathode Case
6204	1–51	396	R–600P_{RV}, 30A, Cathode Case
6206	1–51	396	R–200P_{RV}, 30A, Fast Recovery, Cathode Case
6208	1–51	396	R–400P_{RV}, 30A, Fast Recovery, Cathode Case
6210	1–52	396	R–600P_{RV}, 30A, Fast Recovery, Cathode Case
6220	1–85	422d	Rectifier Power Module, 1200V, 65A
6230	1–85	422d	Rectifier Power Module, 1200V, 95A
6240	1–52	502a	R–Si, Dual, Center Tap, 200P_{RV}, 16A, Ultra Fast, 35ns
⇒ 6241	1–52	502a	R–Si, Dual, Center Tap, 600P_{RV}, 16A, Super Fast, 50ns
6244	1–52	502b	R–Si, Dual, Center Tap, 200P_{RV}, 16A, Ultra Fast, 35ns
6246	1–52	503	R–Si, Dual, Center Tap, 200P_{RV}, 30A, Ultra Fast, 35ns
⇒ 6247	1–52	503	R–Si, Dual, Center Tap, 600P_{RV}, 30A, Super Fast, 60ns
6354	1–67	123	R–400P_{RV}, 300A, Cathode Case
6355	1–67	123	R–400P_{RV}, 300A, Anode Case
6356	1–67	123	R–600P_{RV}, 300A, Cathode Case
6357	1–67	123	R–600P_{RV}, 300A, Anode Case
6358	1–67	123	R–1000P_{RV}, 300A, Cathode Case
6359	1–67	123	R–1000P_{RV}, 300A, Anode Case
6362	1–67	123	R–1400 PRV, 300A, Cathode Case
6363	1–67	123	R–1400 PRV, 300A, Anode Case
6400	1–87	125	UJT–Unijunction Transistor
6400A	1–87	125	UJT–Unijunction Transistor
6401	1–87	126	UJT–Unijunction Transistor
6402	1–87	9g/ 127a	T–PUT, Programmable Unijunction Transistor
6403	1–87	9h/ 127b	(SBS) Silicon Bilateral Switch
6404	1–89	5	(SUS) Silicon Unilateral Switch
6405	1–89	386	(SAS) Silicon Asymmetrical Switch
6407	1–89	130	D–DIAC, Bilateral Trigger Diode V_{BO} = 28V
6408	1–89	130	D–DIAC, Bilateral Trigger Diode, V_{BO} = 32V
6409	1–87	126	UJT–Unijunction Transistor
6410	1–87	9k	UJT–Unijunction Transistor
6411	1–89	130	D–DIAC, Bilateral Trigger Diode, V_{BO} = 40V
6412	1–89	130	D–DIAC, Bilateral Trigger Diode, V_{BO} = 63V
6415	1–88	395	SIDAC–Bidirectional Diode Thyristor, V_{BO} = 45 to 90
6416	1–88	395	SIDAC–Bidirectional Diode Thyristor, V_{BO} = 55 to 65
6417	1–88	395	SIDAC–Bidirectional Diode Thyristor, V_{BO} = 95 to 113
6418	1–88	395	SIDAC–Bidirectional Diode Thyristor, V_{BO} = 104 to 118
6419	1–88	395	SIDAC–Bidirectional Diode Thyristor, V_{BO} = 110 to 125
6502	1–316	299	IC–NMOS, 8–Bit Microprocessor, 1MHz
6507	1–316	253	IC–NMOS, 8–Bit Microprocessor w/on Chip Clock OSC
6508	1–316	249	IC–CMOS, Static 1K RAM, 300nS
6532	1–316	299	IC–NMOS, Memory, I/O, Timer Array
6800	1–317	299	IC–CMOS, 8–Bit Microprocessor, 1MHz
6802	1–317	299	IC–CMOS, 8–Bit Microprocessor w/Clock 128 Bytes RAM
6809	1–317	299	IC–MOS, 8–Bit Microprocessor
6809E	1–317	299	IC–MOS, 8–Bit Microprocessor
6810	1–317	252	IC–CMOS, PIA, Peripheral Interface Adapter for NTE6800
6821	1–317	299	NMOS, Peripheral Interface Adapter (PIA) for NTE6800
6850	1–318	252	IC–CMOS, Asynchronous Communications Interface Adapter
6860	1–251	252	IC–MOS, FSK Digital Modem, 600bps
6875	1–318	249	IC, Two Phase Clock Generator/Driver for NTE6800
6880	1–309	249	IC–Schottky, Quad 3–State Bus Transceiver
6885	1–309	249	IC–Schottky, Hex 3–State Buffer/Inverter, Non–Inverting
6886	1–309	249	IC–Schottky, Hex 3–State Buffer/Inverter, Inverting
6887	1–309	249	IC–Schottky, Hex 3–State Buffer/Inverter, Non–Inverting
6888	1–309	249	IC–Schottky, Hex 3–State Buffer/Inverter, Inverting
6889	1–309	249	Non–Inverting Bus Transceiver
⇒ 7000	1–243	248	IC–Linear, 5W Audio Amp w/Muting
⇒ 7001	1–243	248	IC–Linear, Horizontal Combination Ckt
⇒ 7002	1–243	489	IC–Linear, Switch Mode Power Supply Control

⇒ DENOTES NEW DEVICE

NTE PRODUCT NUMERICAL INDEX

NTE Type No.	Page No.	Diag. No.	Description
⇒ 7004	1–243	339	IC–Linear, TV/VCR Freq Synthesizer
⇒ 7005	1–243	248	IC–Linear, 2 Phase Stepping Motor Driver
⇒ 7006	1–243	542	IC–Linear, Switch Mode Driver for DC Motors
⇒ 7007	1–243	536	IC–Linear, TV/VCR Control Ckt
⇒ 7008	1–244	536	IC–Linear, Color TV Video, Chroma, Deflection Ckt
⇒ 7014	1–244	494	IC–Linear, TV FM Multiplex Sound Decoder
⇒ 7015	1–244	536	IC–Linear, PLL SIF & VIF for TV & VCR
⇒ 7016	1–244	248	IC–Linear, FM IF System
⇒ 7019	1–244	472	IC–Linear, Digital Tuning System Interface for TV Systems
⇒ 7020	1–244	458	IC–Linear, VCR Audio Rec/PB Processor
7214	1–281	249	IC–TTL, 3–State SEL/MPX
7400	1–281	247	IC–TTL, Quad 2–Input Pos–NAND Gate
7401	1–281	247	IC–TTL, Quad 2–Input Pos–NAND Gates
7402	1–281	247	IC–TTL, Quad 2–Input Pos–NOR Gate
7403	1–281	247	IC–TTL, Quad 2–Input Pos–NAND Gates with Open Coll
7404	1–281	247	IC–TTL, Hex Inverter
7405	1–281	247	IC–TTL, Hex Inverter
7406	1–281	247	IC–TTL, Hex Inverter Buffer/Driver with Open–Coll HV Outputs
7407	1–281	247	IC–TTL, Hex Buffer Driver with Open Coll HV Outlets
7408	1–281	247	IC–TTL, Quad 2–Input Pos–AND Gates
7409	1–281	247	IC–TTL, quad 2–Input Pos–AND Gates with Open Coll
7410	1–282	247	IC–TTL, Triple 3–Input Pos–AND Gates
7411	1–282	247	IC–TTL, Triple 3–Input Pos–AND Gates
7412	1–282	247	IC–TTL, Triple 3–Input Pos–AND Gates with Open Coll
7413	1–282	247	IC–TTL, Dual 4–Input Pos–NAND Schmitt Trigger
7414	1–282	247	IC–TTL, Hex Schmitt–Trigger Inverter
7416	1–282	247	IC–TTL, Hex Inverter Buffer/Drivers with Open Coll HV Outputs
7417	1–282	247	IC–TTL, Hex Buffer/Drivers with Open Coll HV Outputs
7420	1–282	247	IC–TTL, Dual 4–Input Pos–NAND Gates
7421	1–282	247	IC–TTL, Dual 4–Input Pos–AND Gates
7422	1–282	247	IC–TTL, Dual 4–Input Pos NAND Gates
7423	1–282	249	IC–TTL, Expandable Dual 4–Input Pos–NOR Gate with Strobe
7425	1–283	247	IC–TTL, Dual 4–Input Pos–NOR Gates with Strobe
7426	1–283	247	IC–TTL, Quad 2–Input HV Interface Pos–NAND Gate
7427	1–283	247	IC–TTL, Triple 3–Input Pos–NOR Gates
7430	1–283	247	IC–TTL, 8–Input Pos–NAND Gate
7432	1–283	247	IC–TTL, Quad 2–Input Pos–OR Gate
7433	1–283	247	IC–TTL, Quad 2–Input Pos–NOR Buffer
7437	1–283	247	IC–TTL, Quad 2–Input Pos–NAND Buffer
7438	1–283	247	IC–TTL, Quad 2–Input Pos–NAND Buffer with Open Coll
7439	1–283	247	IC–TTL, Quad 2–Input NAND Gate/Buffer with Open Coll
7440	1–283	247	IC–TTL, Dual 4–Input Pos–NAND Buffer
7441	1–283	249	IC–TTL, Decoder Driver
7442	1–284	249	IC–TTL, 4–Line–to–10–Line BCD–to–Decimal Decoder
7443	1–284	249	IC–TTL, 4–Line–to–10–Line Excess–3–Decimal–Decoder
7444	1–284	249	IC–TTL, 4–Line–to–10–Line Excess–3–Gray–to Decimal Decoder
7445	1–284	249	IC–TTL, BCD–to–Decimal Decoder/Driver, 80mA Current Sink
7446	1–284	249	IC–TTL, BCD–to–Seven–Segment Decoder Driver, Active Low, Open Coll 30V
7447	1–284	249	IC–TTL, BCD–to–Seven–Segment Decoder Driver, Active Low, Open Coll 15V
7448	1–284	249	IC–TTL, BCD–to–Seven–Segment Decoder/Driver, Internal Pull–up
7450	1–284	247	IC–TTL, Dual 2–Wide, 2–Input, AND–OR INVERT GATES (One Gate Expandable)
7451	1–284	247	IC–TTL, Dual 2–Wide, 2–Input AND/OR Invert Gate
7453	1–284	247	IC–TTL, Expandable 4–Wide AND–OR Invert Gate
7454	1–285	247	IC–TTL, 4–Wide AND–OR–INVERT Gate
7460	1–285	247	IC–TTL, Dual 4–Input Expander
7470	1–285	247	IC–TTL, AND–Gated J–K Pos–Edge–Triggered Flip–Flop with Preset & Clear
7472	1–286	247	IC–TTL, AND–Gated J–K Master–Slave Flip–Flop with Preset & Clear
7473	1–286	247	IC–TTL, Dual J–K Flip–Flop with Clear
7474	1–286	247	IC–TTL, Dual "D" Type Pos–Edge–Triggered Flip–Flop with Preset & Clear
7475	1–286	249	IC–TTL, 4–Bit Bistable Latches
7476	1–286	249	IC–TTL, Dual J–K Flip–Flop with Preset & Clear
7480	1–286	247	IC–TTL, Gated Full Adder with Complementary Inputs & Complementary Sum Outputs
7482	1–286	247	IC–TTL, 2–Bit Binary Full Adder
7483	1–287	249	IC–TTL, 4–Bit Binary Full Adder with Fast Carry
7485	1–287	249	IC–TTL, 4–Bit Magnitude Comparators
7486	1–287	247	IC–TTL, Quad 2–Input Exclusive OR Gates
7489	1–287	249	IC–TTL, 64–Bit Read/Write Memory

⇒ DENOTES NEW DEVICE

NTE PRODUCT NUMERICAL INDEX

NTE Type No.	Page No.	Diag. No.	Description
7490	1–287	247	IC–TTL, Decade Counter (Divide–by–Two & Divide–by–Five)
7491	1–287	247	IC–TTL, 8–Bit Shift Register, Serial In/Out, Gated Input
7492	1–287	247	IC–TTL, Divide–by–Twelve Counter (Divide by Two & Six)
7493A	1–288	247	IC–TTL, 4–Bit Shift Register, Dual Asynchronous Preset
7494	1–288	249	IC–TTL, 4–Bit Shift Register, Dual Asynchronous Preset
7495	1–288	247	IC–TTL, 4–Bit Shift Register Parallel
7496	1–288	249	IC–TTL, 5–Bit Shift Register, Asynchronous Preset
7497	1–288	249	IC–TTL, Synchronous 6–Bit Binary Rate Multiplier
8070	1–98	193	Thermal Cut–Off, 72°C/162°F Opening Temperature
8076	1–98	193	Thermal Cut–Off, 77°C/171°F Opening Temperature
8080A	1–318	299	IC–CMOS, 8–Bit Microprocessor, 2MHz
8081	1–98	193	Thermal Cut–Off, 84°C/184°F Opening Temperature
8085	1–98	193	Thermal Cut–Off, 87°C/189°F Opening Temperature
8090	1–98	193	Thermal Cut–Off, 93°C/200°F Opening Temperature
8096	1–98	193	Thermal Cut–Off, 98°C/209°F Opening Temperature
8098	1–98	193	Thermal Cut–Off, 100°C/212°F Opening Temperature
8103	1–98	193	Thermal Cut–Off, 104°C/220°F Opening Temperature
8108	1–98	193	Thermal Cut–Off, 109°C/229°F Opening Temperature
8115	1–98	193	Thermal Cut–Off, 117°C/243°F Opening Temperature
8118	1–98	193	Thermal Cut–Off, 121°C/250°F Opening Temperature
8123	1–302	249	IC–TTL, Quad 2–Input Data Selector/ Multiplexer
8125	1–98	193	Thermal Cut–Off, 128°C/263°F Opening Temperature
8139	1–98	193	Thermal Cut–Off, 141°C/286°F Opening Temperature
8149	1–98	193	Thermal Cut–Off, 152°C/306°F Opening Temperature
8167	1–98	193	Thermal Cut–Off, 171°C/340°F Opening Temperature
8181	1–98	193	Thermal Cut–Off, 184°C/364°F Opening Temperature
8212	1–318	252	IC–8–Bit Input/Output Port
8213	1–98	193	Thermal Cut–Off, 216°C/421°F Opening Temperature
8214	1–318	252	IC–Priority Interrupt Controller, 8–Level
8216	1–318	249	IC–4–Bit Parallel Bidirectional Bus Driver
8223	1–302	249	1–Line–to–8–Line Demultiplexer
8224	1–319	249	IC–Clock Generator & Driver for 8080A Processors
8226	1–98	193	Thermal Cut–Off, 228°C/443°F Opening Temperature
8228	1–319	253	IC–Single Chip System Controller & Bus Driver for 8080A Processors
8234	–	249	IC–Quad 2–Line–to–1–Line Data Selector/Multiplexer with Inverting Outputs
8235	–	249	IC–Quad 2–Line–to–1–Line Data Selector /Multiplexer with Inverting Outputs
8242	1–98	193	Thermal Cut–Off, 240°/464°F Opening Temperature
8255	1–319	299	IC–Programmable Peripheral Interface for 8080A/8085A Processors
8266	–	249	IC–Quad 2–Line–to–1–Line 4–Bit Multiplexer
8308	1–302	252	IC–Dual 4–Bit Latch
8309	1–303	249	IC–Data Selector/Multiplexer
8314	1–303	249	IC–4–Bit Latch
8316	1–303	249	IC–Synchronous 4–Bit Binary Counter
8318	1–303	249	IC–8–Input Priority Encoder
8321	1–303	249	IC–Dual 1–of–4 Decoder
8328	1–303	249	IC–Dual 8–Bit Shift Register
8370	1–303	249	IC–Seven–Segment Latch/Decoder/ Driver with Open Coll
8374	1–303	249	IC–Seven–Segment Latch/Decoder/ Driver for Common Anode LED's
8520	1–303	249	IC–Modular–N–Divider, Cascadable
8542	1–303	249	IC–3–State Quad I/O Register
8546	1–303	249	IC–8–Bit Universal I/O Shift Register
8556	1–303	249	IC–3–State Programmable Binary Counter
9093	1–310	247	IC–DTL–Dual J–K Flip–Flop
9094	1–310	247	IC–DTL–Dual J–K Flip–Flop
9097	1–310	247	IC–DTL–Dual J–K Flip–Flop
9099	1–310	247	IC–DTL–Dual J–K Flip–Flop
9135	1–310	247	IC–DTL–Hex Inverter
9157	1–310	247	IC–DTL–Quad 2–Input Buffer
9158	1–310	247	IC–DTL–Hex Inverter
9200	1–251	305	IC–I2L Frequency Divider
9370	1–311	249	IC–HLL, Quad "D" Flip–Flop
9402	1–251	296	IC–Hall Effect Switch
9403	1–251	248	IC–Binary/Octal Decoder
9601	1–304	247	IC–Retriggerable Monostable Multivibrator

⇒ DENOTES NEW DEVICE

NTE PRODUCT NUMERICAL INDEX

NTE Type No.	Page No.	Diag. No.	Description
9602	1–304	249	IC–Dual Retriggerable Monostable Multivibrator
9660	1–312	247	IC–HTL, Expandable Dual 4–Input NAND Gate, Active Pullup
⇒ 9661	1.312	247	IC–HTL, Expandable 4–Input NAND Gate
9664	1–312	247	IC–HTL, Master–Slave R–S Flip–Flop
9666	1–312	247	IC–HTL, Triple Level Translator
9668	1–312	247	IC–HTL, Quad, 2–Input NAND Gate
9669	1–312	247	IC–HTL, Dual 4–Input Expander
9670	1–312	247	IC–HTL, Triple 3–Input NAND Gate, Passive Pullup
9671	1–312	247	IC–HTL, Triple 3–Input NAND Gate, Active Pullup
⇒ 9672	1–313	247	IC–HTL, Quad 2–Input NAND Gate, Active Pullup
9675	1–313	247	IC–HTL, Dual Pulse Stretcher
9680	1–313	247	IC–HTL, Hex Inverter, Active Pullup
9681	1–313	247	IC–HTL, Hex Inverter, Open Collector
9682	1–313	248	IC–HTL, Quad Latch
9689	1–313	247	IC–HTL, Hex Inverter
9691	1–313	247	IC–HTL, Hex Inverter/Translator
9800	1–310	247	IC–DTL, 5–Input NAND Gate, 6KΩ Pullup
9801	1–310	247	IC–DTL, Dual 5–Input NAND Gate, 2KΩ Pullup
9802	1–310	247	IC–DTL, Expandable 8–Input NAND Gate, 6KΩ Pullup
9803	1–310	247	IC–DTL, Expandable 8–Input NAND Gate, 2KΩ Pullup
9804	1–310	247	IC–DTL, 10–Input NAND Gate, 6KΩ Pullup
9805	1–310	247	IC–DTL, 10–Input NAND Gate, 2KΩ Pullup
9806	1–310	247	IC–DTL, Quad 2–Input AND Gate, 6KΩ Pullup
9807	1–310	247	IC–DTL, Quad 2–Input AND Gate, 2KΩ Pullup
9808	1–310	247	IC–DTL, Quad 2–Input OR Gate, 6KΩ Pullup
9809	1–310	247	IC–DTL, Quad 2–Input OR Gate, 2KΩ Pullup
9810	1–310	247	IC–DTL, Quad 2–Input NOR Gate, 6KΩ Pullup
9811	1–310	247	IC–DTL, Quad 2–Input NOR Gate, 2KΩ Pullup
9812	1–310	247	IC–DTL, Quad 2–Input Exclusive OR Gate
9814	1–310	247	IC–DTL, Quad Latch
9924	1–310	247	IC–RTL, NOR Gate, Medium Power
9930	1–310	247	IC–DTL, Expandable Dual 4–Input NAND Gate 6KΩ Pullup
9932	1–311	247	IC–DTL, Expandable Dual 4–Input Buffer
9933	1–311	247	IC–DTL, Expandable Dual 3–2 Input Buffer
9935	1–311	247	IC–DTL, Hex Inverter, Open Collector
9936	1–311	247	IC–DTL, Hex Inverter, 6KΩ Pullup
9937	1–311	247	IC–DTL, Hex Inverter, 2KΩ Pullup
9944	1–311	247	IC–DTL, Expandable Dual 4–Input Buffer
9945	1–311	247	IC–DTL, Clocked Flip–Flop, 6KΩ Pullup
9946	1–311	247	IC–DTL, Quad 2–Input NAND Gate, 6KΩ Pullup
9948	1–311	247	IC–DTL, Clocked Flip–Flop, 2KΩ Pullup
9949	1–311	247	IC–DTL, Quad 2–Input NAND Gate, 2KΩ Pullup
9950	1–311	247	IC–DTL, Pulse Triggered Binary
9951	1–311	247	IC–DTL, Monostable Multivibrator
9961	1–311	247	IC–DTL, 4–Input Expandable Dual NAND Gate
9962	1–311	247	IC–DTL, Triple 3–Input NAND Gate, 6KΩ Pullup
9963	1–311	247	IC–DTL, Triple 3–Input NAND Gate, 2KΩ Pullup
9989	–	247	IC–RTL, Hex Inverter
15001	1–245	536	IC–Linear, VCR VIF & SIF
15002	1–245	537	IC–Linear, Vertical Amp
15003	1–245	249	IC–Linear, TV PIF Subsystem
15004	1–245	224	IC–Linear, VCR Remote Control Pre–Amp
15005	1–245	–	IC, Linear,
⇒ 15005E	1–97	480	IC Protector, 50V Max, 0.4A Max
15006	1–245	447	IC–Linear, Dual Bi–Directional Motor Driver
⇒ 15006E	1–97	480	IC Protector, 50V Max, 0.6A Max
15007	1–245	454	IC–Linear, U.S. TV Audio Multiplexing System
⇒ 15007E	1–97	480	IC Protector, 50V Max, 0.8A Max
⇒ 15008E	1–97	480	IC Protector, 50V Max, 1.0A Max
15009	1–246	287	IC–Linear, VCR Color ACC Ckt
⇒ 15009E	1–97	480	IC Protector, 50V Max, 1.5A Max
15010	1–246	287	IC–Linear, VCR Color AFC Ckt
15012	1–120	538	IC–Linear, TV Fixed Vltg Reg, 135V, 1A
15013	1–246	540	IC–Linear, TV VIF Amp, PLL Det
15014	1–246	337	IC–Linear, Dual dbx II Noise Reduction System
15015	1–246	536	IC–Linear, TV Video Processor
15016	1–247	553	IC–Linear, NTSC Chroma, Luminance, Sync & Defl Ckt
15017	1–247	287	IC–Linear, VCR Head Amp Ckt
15018	1–120	538	IC–Linear, TV Fixed Vltg Reg, 115V, 1A
15019	1–120	538	IC–Linear, TV Fixed Vltg Reg, 130V, 1A
⇒ 15019E	1–97	481	IC Protector, 50V Max, 0.25A Max
15020	1–120	538	IC–Linear, TV Fixed Vltg Reg, 125V, 1A

⇒ DENOTES NEW DEVICE

NTE PRODUCT NUMERICAL INDEX

NTE Type No.	Page No.	Diag. No.	Description
⇒ 15020E	1–97	481	IC Protector, 50V Max, 0.4A Max
15021	1–120	538	IC–Linear, TV Fixed Vltg Reg, 123V ±1V, 1A
⇒ 15021E	1–97	481	IC Protector, 50V Max, 0.6A Max
15022	1–120	538	IC–Linear, TV Fixed Vltg Reg, 135V, 1A
⇒ 15022E	1–97	481	IC Protector, 50V Max, 0.8A Max
15023	1–247	248	IC–Linear, dbx TV Noise Reduction Ckt
⇒ 15023E	1–97	481	IC Protector, 50V Max, 1.0A Max
15026	1–248	444	IC–Linear, VCR Motor Driver Ckt
15027	1–248	442	IC–Linear, VCR 3 Input Switch W/Mute
15029	1–248	448	IC–Linear, 2 Ch Tone/Vol Ckt
15030	1–248	449	IC–Linear, VCR Color Processor
15031	1–248	545	Module, Stereo Amp, 15W/Ch
15032	1–120	453	IC–Linear, TV Fixed Vltg Reg, 130V, 1A
15033	1–120	453	IC–Linear, TV Fixed Vltg Reg, 135V, 1A
15034	1–249	456	Module, AF Pwr Output 100W/Ch
15035	1–249	451	IC–Linear, Video IF, Chroma Deflection
⇒ 15038	1–249	467	IC–Linear, VHS VCR Chroma Signal Processor
⇒ 15039	1–249	467	IC–Linear, VHS VCR Chroma Signal Processor
⇒ 15040	1–120	453	IC–Linear, TV Fixed Vltg Reg, 120V, 1A
⇒ 15041	1–120	453	IC–Linear, TV Fixed Vltg Reg, 125V, 1A
⇒ 15042	1–250	472	IC–Linear, Digital Tuning System Interface for TV
⇒ 15043	1–250	474	IC–Linear, VCR Video Head Amp
⇒ 15044	1–250	516b	IC–CMOS, Voltage Detector for VCR
⇒ 15045	1–250	214	IC–Linear, 2 Input Switch
⇒ 15046	1–250	445	IC–Linear, TV Video IF Processor
16001	1–25	516	T–NPN, Si, Video IF Amp
16002	1–25	58b	T–NPN, Si, RF Power, Dr, P_O = 13.5W, 175MHz
16003	1–25	58b	T–NPN, Si, RF Power, Dr, P_O = 7.5W, 100MHz
16004	1–25	21a	T–PNP, Si, High Current, Gen Purp (Compl to NTE16005)
16005	1–25	21a	T–NPN, Si, High Current, Gen Purp (Compl to NTE16004)
16006	1–25	516	T–NPN, Si, AF Amp
⇒ 16007	1–25	475	T–NPN, Si, General Purpose for Medium Power Applications
21128	1–319	446	IC–NMOS, 128K EPROM, 250ns
21256	1–319	248	IC–NMOS, 256K DRAM, 150ns
⇒ 30001	1–105	460	Infrared Light Emitting Diode (Bi–Directional)
40085B	1–280	249	IC–CMOS, 4–Bit Magnitude Comparator
40097B	1–280	249	IC–CMOS, Hex 3–State Buffer
40098B	1–280	249	IC–CMOS, 32–Stage Static Shift Left/ Right, Shift Register
40100B	1–280	249	IC–CMOS, 32–Stage Static Shift Left/ Right, Shift Register
40106B	1–280	247	IC–CMOS, Hex Schmitt Trigger
40160B	1–280	249	IC–CMOS, Synchronous Programmable 4–Bit Decade Counter with Asynchronous Clear
40161B	1–280	249	IC–CMOS, Synchronous Programmable 4–Bit Binary Counter with Asynchronous Clear
40162B	1–280	249	IC–CMOS, Synchronous Programmable 4–Bit Decade Counter with Synchronous Clear
40163B	1–280	249	IC–CMOS, Synchronous Programmable 4–Bit Binary Counter with Synchronous Clear
40174B	1–280	249	IC–CMOS, Hex "D" Type Flip–Flop
40175B	1–280	249	IC–CMOS, Quad "D" Type Flip–Flop
40182B	1–280	249	IC–CMOS, Look Ahead Carry Generator
40192B	1–280	249	IC–CMOS, Up/Down BCD Counter, Dual Clock with Reset
40193B	1–280	249	IC–CMOS, Up/Down Binary Counter, Dual Clock with Reset
40194B	1–280	249	IC–CMOS, 4–Bit Bidirectional Universal Shift Register with Asynchronous Master/ Reset
40195B	1–280	249	IC–CMOS, 4–Bit Shift Register
56004	1–79	11j	TRIAC, 200VRM, 15A
56006	1–79	11j	TRIAC, 400VRM, 15A
56008	1–79	11j	TRIAC, 600VRM, 15A
56010	1–79	11j	TRIAC, 800VRM, 15A
56014	1–80	406	TRIAC, 400VRM, 25A, TO3 Isol Flange
56015	1–79	11j	TRIAC, 200VRM, 25A, TO220
56016	1–79	11j	TRIAC, 400VRM, 25A, TO220
56017	1–79	11j	TRIAC, 600VRM, 25A, TO220
56018	1–79	11j	TRIAC, 800VRM, 25A, TO220
⇒ 56019	1–79	11k	TRIAC, 200VRM, 25A, Isolated Tab
⇒ 56020	1–79	11k	TRIAC, 400VRM, 25A, Isolated Tab
56022	1–80	113b	TRIAC, 200VRM, 40A, Isolated Stud
56024	1–80	113b	TRIAC, 400VRM, 40A, Isolated Stud
56026	1–80	113b	TRIAC, 600VRM, 40A, Isolated Stud
⇒ 56028	1–80	11j	TRIAC, 800VRM, 40A
⇒ 56033	1–80	55b	TRIAC, 600VRM, 45A
65101	1–319	337	IC–CMOS, Static 1K RAM, 450ns
74100	1–288	252	IC–TTL, Dual 4–Bit Latch
74105	1–289	247	IC–TTL, J–K Master–Slave Flip–Flop
74107	1–289	247	IC–TTL, Dual J–K Flip–Flop with Clear
74109	1–289	247	IC–TTL, Dual J–K Pos Edge–Triggered Flip–Flop with Preset & Clear
74110	1–289	247	IC–TTL, AND Gated J–K Master–Slave Flip–Flop with Data Lockout
74111	1–289	249	IC–TTL, Dual J–K Master–Slave Flip–Flop with Data Lockout

⇒ DENOTES NEW DEVICE

NTE PRODUCT NUMERICAL INDEX

NTE Type No.	Page No.	Diag. No.	Description
74116	1–289	252	IC–TTL, Dual 4–Bit Latch
74120	1–290	249	IC–TTL, Dual Pulse Synchronizer/Driver
74121	1–290	247	IC–TTL, Monostable Multivibrator
74122	1–290	247	IC–TTL, Retriggerable Monostable Multivibrator with Clear
74123	1–290	249	IC–TTL, Dual Retriggerable Monostable Multivibrator with Clear
74125	1–290	247	IC–TTL, Quad Bus Buffer Gate with 3–State Outputs
74128	1–290	247	IC–TTL, 50–Ohm Line Driver
74132	1–290	247	IC–TTL, Quad 2–Input Pos NAND Schmitt Trigger
74136	1–290	247	IC–TTL, Quad Exclusive–OR–Gate with Open Collector
74141	1–291	249	IC–TTL, BCD to Decimal Decoder/Driver
74145	1–291	249	IC–TTL, BCD to Decimal Decoder Driver
74147	1–291	249	IC–TTL, 10–Line Decimal to 4–Line BCD Priority Encoder
74148	1–291	249	IC–TTL, 8–Line Octal Priority Encoder
74150	1–291	252	IC–TTL, 1–0f–16 Data Selector/Multiplexer
74151	1–291	249	IC–TTL, 1–of–8 Data Selector/Multiplexer
74152	1–291	247	1–of–8 Data Selector/Multiplexer
74153	1–292	249	IC–TTL, Dual 4–Line to 1–Line Data Selector/Multiplexer
74154	1–292	252	IC–TTL, 4–Line to 16–Line Decoder /Demultiplexer
74155	1–292	249	IC–TTL, Dual 2–Line to 4–Line Decoder/Demultiplexer
74156	1–292	249	IC–TTL, Dual 2–Line to 4–Line Decoder/Demultiplexer
74157	1–292	249	IC–TTL, Quad 2–to–1 Line Data Selector/Multiplexer
74158	1–292	249	IC–TTL, Quad 2–to–1 Line Data Selector/Multiplexer
74160	1–292	249	IC–TTL, Synchronous 4–Bit Decade Counter
74161	1–292	249	IC–TTL, Synchronous 4–Bit Binary Counter
74162	1–292	249	IC–TTL, Synchronous 4–Bit Decade Counter
74163	1–292	249	IC–TTL, Synchronous 4–Bit Binary Counter with Clear
74164	1–292	247	IC–TTL, 8–Bit Parallel–Out–Serial Shift Register
74165	1–292	249	IC–TTL, Parallel–Load 8–Bit Shift Register
74166	1–292	249	IC–TTL, 8–Bit Parallel or Shift Register
74170	1–293	249	IC–TTL, 4 by 4 Register File
74173	1–293	249	IC–TTL, 4–Bit "D" Type Flip–Flop with 3–State Outputs
74174	1–293	249	IC–TTL, Hex "D" Type Flip–Flop with Serial Rail Outputs
74175	1–293	249	IC–TTL, Quad "D" Type Flip–Flop with Common Direct Clear
74176	1–293	247	IC–TTL, Decade (Bi–Quinary) Presettable Counter Latch
74177	1–293	247	IC–TTL, Binary Presettable Counter/Latch
74178	1–293	247	IC–TTL, Universal Shift Register
74179	1–293	249	IC–TTL, 4–Bit Universal Shift Register with Direct Clear
74180	1–293	247	IC–TTL, 9–Bit Odd/Even Parity Generator /Checker
74181	1–293	252	IC–TTL, Arithmetic Logic Unit/Function Generator
74182	1–294	249	IC–TTL, Look–Ahead Carry Generator
74185	1–294	249	IC–TTL, Binary–to–BCD Code Converter
74190	1–294	249	IC–TTL, Synchronous Up/Down BCD Counter
74191	1–294	249	IC–TTL, Synchronous Up/Down Binary Counter
74192	1–294	249	IC–TTL, Synchronous Up/Down BCD Counter (Dual Clock with Clear)
74193	1–294	249	IC–TTL, Synchronous Up/Down Binary Counter (Dual Clock with Clear)
74195	1–294	249	IC–TTL, 4–Bit Parallel Access Shift Register
74196	1–294	247	IC–TTL, Presettable (Bi–Quinary) Decade Counter/Latch
74197	1–294	247	IC–TTL, Presettable Binary Counter/Latch
74198	1–294	252	IC–TTL, 8–Bit Bidirectional Universal Shift Register
74199	1–295	252	IC–TTL, 8–Bit Bidirectional Shift Register
74221	1–295	249	IC–TTL, Dual Monostable Multivibrator
74249	1–295	249	IC–TTL, BCD–to–7–Segment Decoder/Driver with Open Collector
74251	1–296	249	IC–TTL, Data Selector/Multiplexer with True & Inverted 3–State Outputs
74265	1–296	249	IC–TTL, Quad Complementary Output Elements
74278	1–296	247	IC–TTL, 4–Bit Cascadable Priority Register with Latched Data Inputs & Priority Output Gating
74279	1–296	249	IC–TTL, Quad Set–Reset Latch with Diode–Clamped Inputs & Totem Pole Outputs
74298	1–297	249	IC–TTL, Quad 2–Input Multiplexer with Storage
74365	1–298	249	IC–TTL, Hex Buffer/Driver with Non–Inverted 3–State Outputs & Gated Enable Inputs
74366	1–298	249	IC–TTL, Hex Bus Drivers with Inverted 3–State Output & Gated Enable Inputs

⇒ DENOTES NEW DEVICE

NTE Type No.	Page No.	Diag. No.	Description
74367	1–298	249	IC–TTL, Hex Buffer Driver with Non–Inverted 3–State Outputs, Organized to Handle 4–Bit Data
74368	1–298	249	IC–TTL, Hex Bus Driver with Non–Inverted 3–State Outputs, Organized to Handle 4–Bit Data
74376	1–298	249	IC–TTL, Quad J–K Flip–Flop
74390	1–299	249	IC–TTL, Dual Decade Ripple Counter
74393	1–299	247	IC–TTL, Dual 4–Bit Binary Ripple Counter
74426	1–299	247	IC–TTL, Quad Gate with 3–State Outputs & Active–High Enabling
74490	1–300	249	IC–TTL, Dual BCD Decade Ripple Counter
75188	1–309	247	IC–TTL, Quad Line Driver
75189	1–309	247	IC–TTL, DTL Quad Line Receiver
75322	1–309	247	IC–TTL, Dual TTL to MOS Driver
75450B	1–309	247	IC–TTL, Dual Peripheral AND Driver
75451B	1–309	297	IC–TTL, Dual Peripheral AND Driver
75452B	1–309	297	IC–TTL, Dual Peripheral NAND Driver
75453B	1–309	297	IC–TTL, Dual Peripheral OR Driver
75454B	1–309	297	IC–TTL, Dual Peripheral NOR Driver
75491B	1–309	247	IC–TTL, 4–Segment MOS to LED Anode Driver
75492B	1–309	247	IC–TTL, 6–Digit MOS to LED Cathode Driver
75493	1–309	249	IC–TTL, 4–Segment MOS to LED Anode Driver
75494	1–309	249	IC–TTL, 6–Digit MOS to LED Cathode Driver

⇒ DENOTES NEW DEVICE

NOTES

NTE REPLACEMENT CONSIDERATIONS

NTE Application Information:

- **NTE** solid state devices are first quality. In many cases these devices far exceed the original manufacturer's specification. When using NTE parts for your replacement needs, you are assured of quality and reliability.
- **NTE** devices may be used for new designs. This will ensure replacement availability and confidence in your product.
- **NTE**'s Engineering Department and test facilities will assist you whenever possible with product information. Contact your local distributor or write **NTE** directly for information.

General Replacement Notes:

- Use equal or greater breakdown voltage
- Use equal or greater operating current
- Use equal or greater power dissipation
- Use equal or greater gain bandwidth product
- Use equal or lower switching time
- Use equal or lower trigger current
- Use equal or lower reverse current

Before replacing an original equipment device with the recommended **NTE** device, the following basic factors should be considered:

- Compare the lead or terminal arrangement of the original device with the lead or terminal arrangement of the **NTE** replacement device. If this arrangement is different, bend the leads of the **NTE** transistor so that the base, emitter, and collector leads will mate with the corresponding terminals and insulate the leads if necessary to prevent shorting.

Matched Pairs of Transistors

- When one transistor in a push–pull power amplifier stage becomes inoperative, the resulting circuit imbalance may produce very large changes in the operating conditions for that stage. These changes will depend on the cause and nature of the failure and may cause damage to associated circuit components, including the other transistor(s) in that stage. Therefore, it is advisable to replace both or all transistors is a push–pull power amplifier stage. When one or more of the transistors becomes inoperative, it is generally advisable to replace them with a matched pair even though the service data for the equipment does not specifically indicate that a matched pair should be used.

Silicon Rectifiers

- Silicon Rectifiers are inherently more efficient than selenium or other metallic–oxide type rectifiers. When a selenium rectifier in the "B" supply of a typical line–operated radio or TV receiver is replaced with a silicon rectifier, the silicon rectifier will frequently deliver from 25 to 50 volts higher DC output voltage than the original device. To prevent damage, it is generally advisable to insert a power resistor in series with the silicon rectifier, therefore, on the input side, between the AC supply and the rectifier, or on the output side between the rectifier and the first filter capacitor.

High Voltage Multipliers

- Before replacing an original equipment high–voltage tripler, compare the lead arrangement of the tripler being replaced and note carefully the connection lead positions with respect to other circuit components. These details should be duplicated as precisely as possible when installing the **NTE** replacement.
- Certain original equipment triplers incorporate exposed, non–used focus terminals. When these units are replaced with **NTE** devices, it is imperative to cover the unused terminal with silicon sealant to prevent arcing.

Horizontal Deflection Circuits

- Before replacing a defective Horizontal Output Transistor in a television circuit, carefully check all other associated circuit components. For example, Driver, Horizontal Oscillator, Flyback Transformer, High Voltage Multipliers, and any Resistors or Capacitors. Failure to do so can cause immediate damage to the new replacement.

Special Handling Instructions

1. **Lead Forming**
   At times it may be necessary to form the leads of the replacement device due to different lead configurations or for PCB mounting. To properly form a lead, place a pointed nose or duck–bill pliers between the body of the part on the lead where you want the bend to occur. Bend the lead against the pliers on the side opposite the body of the part. This procedure will eliminate placing any stress where the lead joins the body of the part and prevent the glass or plastic from cracking. In forming any lead, always use as large a radius as possible.

2. **CMOS and MOSFET Handling**
   CMOS and MOSFET devices currently being produced are utilizing internal protection against electrostatic discharge. However, to ensure proper handling, note the following recommendations:

   A. Personnel handling these devices should wear a wrist strap that is connected to the ground through a 1 Megohm Resistor.

   B. The tips of the soldering irons used should be grounded.

   C. Devices should not be removed with the power on.

   D. Leave the conductive foam on the device until ready for insertion in the circuit.

   The approach you take toward static discharge should be influenced by the following considerations that have been investigated by the industry

   These apply to anyone who handles electrostatic–sensitive devices– particularly the technician providing service.

   Static electricity is always present and can be influenced by common, every–day actions. Some of these are:

   1. Walking across a carpet
   2. Walking over a vinyl floor
   3. Technician at a work bench
   4. Vinyl envelopes for work instructions
   5. Common poly–bag picked up from a work bench
   6. Work chair padded with urethane foam

   Considerations should be given to the work environment. Numerous types of materials can significantly influence the generation of static electricity. Some of these you undoubtedly come in contact with everyday.

   WORK SURFACES: Melamine Laminates (waxed or highly resistive); Finished Wood; Synthetic Mats

   FLOORS: Waxed; Vinyl; Carpeting

   CLOTHES: Common clean room stacks; Personnel garments (all textiles except virgin cotton)

   PACKAGING AND HANDLING: Plastic–bags, wraps, envelopes; Bubble pack, foam; plastic trays, plastic tote boxes, vials, parts bins

   ASSEMBLY, CLEANING, TEST AND REPAIR AREAS: Spray cleaners; Common solder suckers; Common solder irons; Solvent brushing (synthetic bristles); Cleaning, drying; Temperature chambers; Cryogenic sprays; Heat guns and blowers; Sand blasting; Electrostatic copiers

Soldering Precautions

- Extreme care should always be used when making solder connections to semiconductors. Momentary application of excessive heat or even prolonged application of a properly heated soldering tool to a semiconductor lead or terminal can permanently damage the device. Always observe the following precautions in soldering to a semiconductor lead or terminal:

  1. Solder as far as possible from the body of the semiconductor.
  2. Never apply molten solder or a hot soldering tool to a lead or terminal for longer than 10 seconds or at a point closer than 1/16 (1.59mm) to the body of the device.
  3. Use a small soldering iron, preferably one specifically intended for use with transistors or miniature components.
  4. Keep the surfaces to be soldered clean and the tip of the soldering tool adequately tinned so that the connection can be made as quickly as possible.
  5. Always grab the lead or terminal to be soldered with a pair of long–nose pliers at a point between the intended solder connection and the case or body of the semiconductor. This precaution allows the pliers to act as a heat sink and conduct the heat away from the semiconductor.

MOUNTING TECHNIQUES

FOR POWER SEMICONDUCTORS

Introduction

Current and power ratings of semiconductors are inseparably linked to their thermal environment. Except for lead–mounted devices used at low currents, a heat sink is required to prevent the junction temperature from exceeding its rated limit, thereby running the risk of a high failure rate.

Many failures of power semiconductors can be traced to faulty mounting techniques. With metal packaged devices, faulty mounting generally causes unnecessarily high junction temperature, resulting in reduced component life. With the widespread use of various plastic packaged semiconductors, proper techniques are even more important.

In many situations, the case of the semiconductor must be isolated electrically from its mounting surface. The isolation material is, to some extent, a thermal isolator as well, which raises junction operating temperatures. In addition, the possibility of arc–over problems is introduced if high voltages are being handled. Electrical isolation thus places additional demands upon the mounting procedures.

Proper mounting procedures necessitate attention to the following areas:

1. Mounting surface preparation
2. Application of thermal compounds
3. Installation of the insulator
4. Fastening of the assembly
5. Lead bending and soldering

Mounting Surface Preparation

In general, the heat sink mounting surface should have a flatness and finish comparable to that of the semiconductor package. In lower power applications, the heat sink surface is satisfactory if it appears flat against a straight edge and is free from deep scratches. In high power applications, a more detailed examination of the surface is required.

Thermal Compounds/ THERMO–PADS*

To improve contacts between power semiconductors and their heat sinks, thermal joint compounds or THERMO–PADS are used to fill air voids between mating surfaces. Joint compounds are a formulation of fine zinc particles in silicon oil which maintains a grease–like consistency with time and temperature. NTE has thermal compound available in 1 gram tubes (NTE303). Since some of these compounds do not spread well, they should be evenly applied in a very thin layer using a spatula or lintless brush, and wiped lightly to remove excess material. Some circular rotation of the packages will help the compound spread evenly over the entire contact area. Experience will indicate whether the quantity is sufficient, as excess will appear around the edges of the semiconductor. To prevent accumulation of airborne particulate matter, excess compound should be wiped away using a cloth moistened with acetone or alcohol.

These solvents should not contact plastic–encapsulated devices, as they may enter the package and cause a leakage path or carry in substances which might attack the assembly. The rougher the surface, the more valuable the grease becomes in lowering contact resistance; therefore, when mica insulating washers are used, the use of grease is generally mandatory. The thermal compound also improves the breakdown voltage rating of the insulator and is therefore highly desirable.

THERMO–PADS are thermally conductive insulators offering low heat transfer resistance while still providing high electrical isolation between the parts of the assembly. The elastomeric material combines the electrical isolation of rigid insulators with the ability to conform to rough surfaces and reduce contact in much the same manner as thermal greases. Proper selection and use of these THERMO–PADS results in a securely–mounted power semiconductor and minimum resistance to the heat transfer between it and the heat sink.

Insulation Consideration

Since it is most expedient to manufacture semiconductors with collectors or anodes electrically common to the case, the problem of isolating the case from ground is a common one. For lowest overall thermal resistance, it is best to isolate the entire heat sink structure from ground, rather than to use an insulator between the semiconductor and the heat sink. Where heat sink isolation is not possible, insulators are used to isolate the individual components from the heat sink. When using insulators, care must be taken to keep the mating surfaces clean. Small particles of foreign matter can puncture the insulation, rendering it useless or seriously lowering its dielectric strength. In addition, particularly when voltages higher than 300 volts are encountered, problems with creepage may occur. Dust and other foreign material can shorten creepage distances significantly so that having a clean repair area is important. Use of thermal grease usually raises the breakdown voltage of the insulation system.

* For a complete selection of NTE THERMO–PADS, please go to Page 1–322

Mounting Techniques

1. **Stud Mount:**
Mounting errors with stud mounted parts are generally confined to the application of excessive torque or tapping the stud into a threaded heat sink hole. Both of these practices may cause a warpage of the hex base which may crack the internal semiconductor chip. The best fastening is to use a nut and washer as shown in Figure 1.

2. **TO3/TO66:**
Few known mounting difficulties exist with this type of package. The rugged base and distance between the chip and mounting holes combine to make it difficult to cause any warpage unless mounted on a heat sink which is badly bowed or unless one side is tightened excessively before the other side. A typical mounting installation is shown in Figure 2.

3. **Press–Fit:**
The hole edge must be chamfered as shown in Figure 3 to prevent shearing off the knurled edge of the case during press–in. The press–in force should be applied evenly on the shoulder ring to avoid tilting of the case in the hole during the pressing operation. Also, the use of a thermal compound will be of considerable aid. The pressing force will vary from 250 to 1000 pounds, depending upon the heat sink material. A heat sink as thin as 1/8 inch may be used, but the interface thermal resistance will increase in direct proportion to the contact area. A thin chassis requires the addition of a back–up plate.

4. **Disk–Type (Hockey Puck):**
A self–leveling type mounting clamp is recommended to assure parallelism and even distribution of pressure on each contact area. A swivel type clamp or narrow leaf spring in contact with the heat dissipator will provide acceptable performance.
The clamping force should be applied smoothly, evenly, and perpendicular to the semiconductor package to prevent deforming the device or the heat dissipator mounting surfaces during installation. The spring used should provide a mounting force within the range specified by the clamping force. The clamping forces usually range from 800 to 2000 pounds, depending on the part number.

   Installation of an assembly of disk–type semiconductors mounted between two heat dissipators should be done in a manner to permit one heat to move with respect to the other. Movement will avoid stresses being developed due to thermal expansion, which could damage the semiconductor.

5. **TO126/TO127:**
Success in mounting these devices depends largely upon using a compression washer which provides a controllable pressure across a large bearing surface. Having a small hole with no chamfer and a flat, burr–free, well–finished heat sink are also important.

   Several types of fasteners may be used to secure these packages. Machine screws, eyelets, or clips are preferred. Screws should not be tightened with any type of air–driver torque gun or equipment which may cause high impact. Use of the clip requires that caution be exercised to insure adequate mounting force is applied.

   When electrical isolation is required, a bushing inside the mounting hole will ensure the screw has no contact with the metal base.

6. **TO220, Tab Mount:**
The popular TO220 package also requires attention to mounting details. Flange distortion is possible if excessive torque is used during mounting. A maximum torque of 8 inch–pounds is suggested in using a 6–32 screw. Care should be exercised to assure that the tool used to drive the mounting screw never comes in contact with the plastic body during the tightening operation. Such contact can result in damage to the plastic body and internal device connections.

7. **R.F. Power:**
Beside the usual precautions regarding surface flatness and torque, the R.F. Disk–Package requires special attention to the following:

   A. The devices should never be mounted in such a manner as to place ceramic to metal joints in tension.

   B. The device should never be mounted in such a manner as to apply force on the strip leads in a vertical direction towards the ceramic cap.

   C. The device should be properly secured into the heat sink before the device leads are attached to the circuit.

   D. The leads must not be used to prevent device rotation during the stud torque application.

   The joint between the ceramic cap and the BeO ceramic disk is composed of a material which loses strength above 175°C. While the strength returns upon cooling, any force applied to the cap at high temperature may result in failure of the cap to ceramic joint.

MOUNTING TECHNIQUES

FOR POWER SEMICONDUCTORS

Figure 1

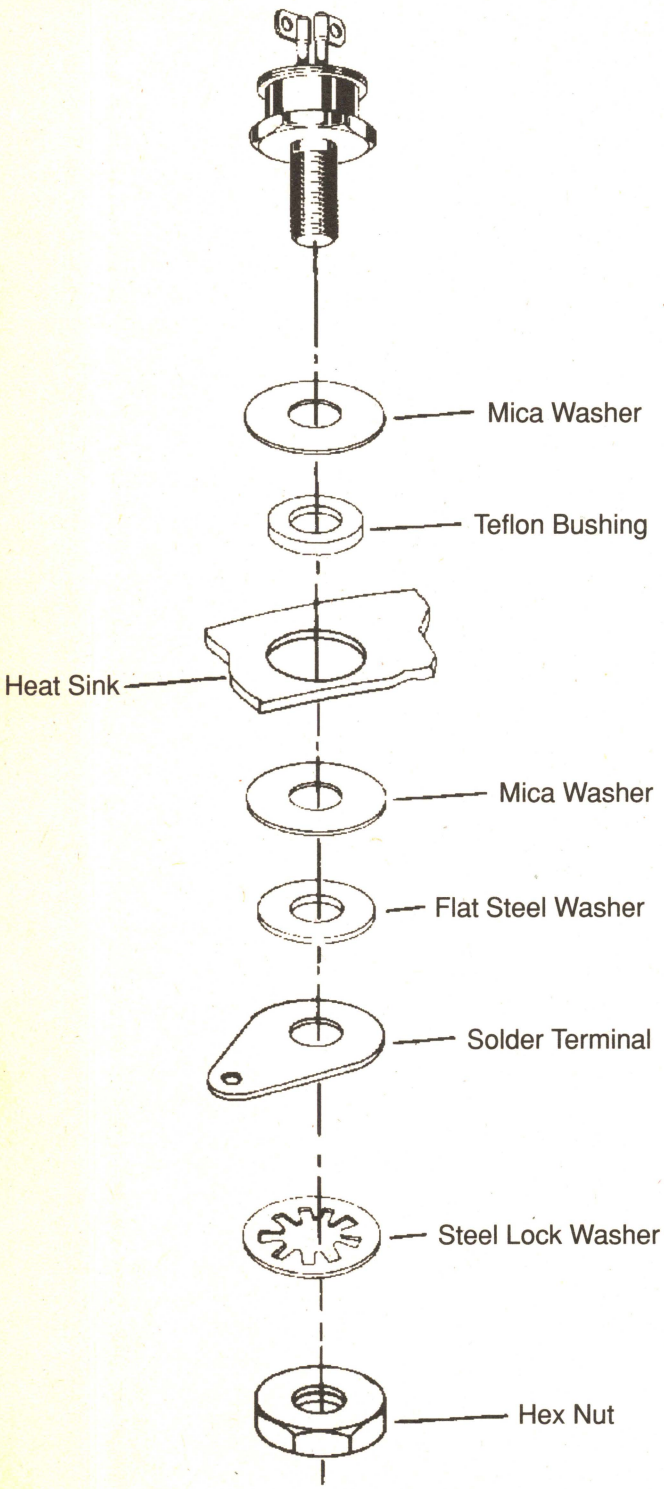

Figure 2

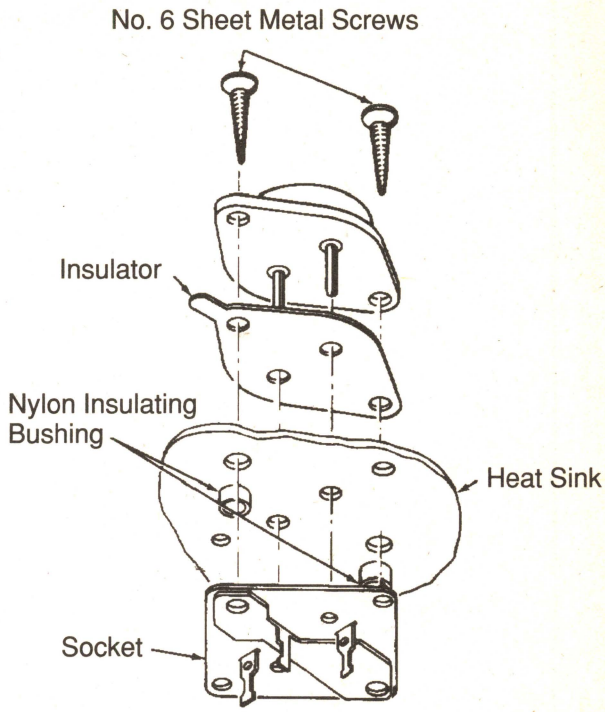

Figure 3

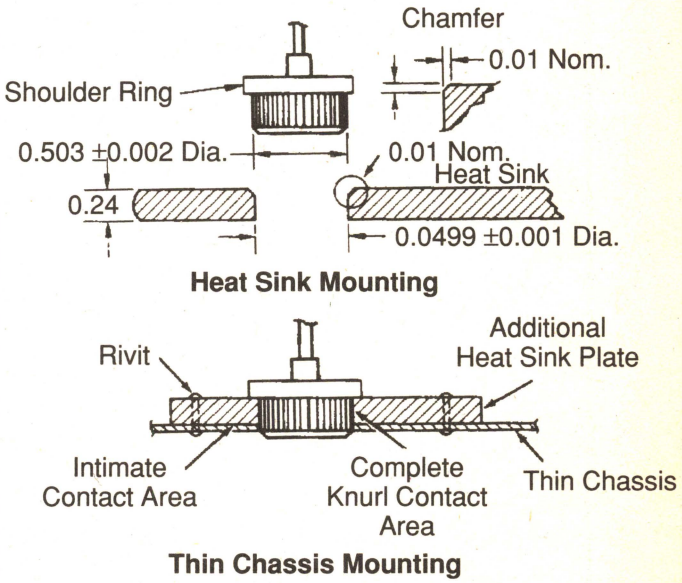

NOTES

NTE Type Number	Polarity and Material	Description and Application	Case Style	Diag. No.	Maximum Collector Current (Amps)	Maximum Breakdown Voltage			Typical Forward Current Gain	Maximum Collector Power Dissipation (Watts)	Typical Freq. (MH_Z)
						Collector to Base (Volts)	Collector to Emitter (Volts)	Emitter to Base (Volts)			
					I_C	BV_{CBO}	BV_{CEO}	BV_{EBO}	h_{FE}	P_D	f_T
10	NPN–Si	UHF Low Noise Amp	TO92	9b	0.07	25	12	2.5	40 Min	0.4	4.5GH_Z
11	NPN–Si	High Current Amp (Compl to NTE12)	TO92	9c	5	40	20	7	230 Min	0.75	150
12	PNP–Si	High Current Amp (Compl to NTE11)	TO92	9c	5	27	18	7	180 Min	0.75	120
13	NPN–Si	Low Voltage Output Amp	–	516a	0.5	25	20	12	400 Min	0.6	200
14	PNP–Si	Low Freq Driver	FTR	411	0.7	80	80	5	120 Min	0.75	100
15	NPN–Si	High Transition–Freq Low Base Resistance High Gain VHF Mixer and Osc, UHF Osc	FTR	411	50	30	19	4	39 Min	0.3	1100
16	NPN–Si	Low Saturation Voltage, Low Output Capacitance Cob = 2.0pF Low Noise, Preamp, Equalizer Amps RF Amps and Osc (Compl to NTE17)	ATR	412	0.1	50	40	5	270 Min	0.3	180
17	PNP–Si	Low Noise, Low Output Capacitance, Sm–Sig Amps, Preamps, Equalizer Amps RF Amps and Osc (Compl to NTE16)	ATR	412	0.1	50	40	50	270 Min	0.3	140
18	NPN–Si	High Breakdown Voltage, Large Current Capacity Driver (Compl to NTE19)	ATR	412	0.7	80	80	5	120 Min	1	120
19	PNP–Si	High Breakdown Voltage, Large Current Capacity Driver (Compl to NTE18)	ATR	412	0.7	80	80	5	120 Min	1	100
20	NPN–Si	High Power, Low Collector Saturation Vltg, Power Output (Compl to NTE21)	ATR	412	2	40	32	5	120 Min	1	100
21	PNP–Si	High Power, Low Collector Saturation Vltg, Power Output (Compl to NTE20)	ATR	412	2	40	32	5	120 Min	1	100
22	NPN–Si	High Breakdown Voltage, Low Collector Saturation, Med Power Amp	ATR	412	1	100	80	5	120 Min	0.9	100
23	NPN–Si	Ultra High Freq Amp	TO92	9b	0.05	30	14	3	80	0.25	2GH_Z
24	NPN–Si	General Purpose Amp, Switch (Compl to NTE25)	TO237	413b	1	100	80	5	50 Min	2 *	150
25	PNP–Si	General Purpose Amp, Switch (Compl to NTE24)	TO237	413b	1	100	80	5	40 Min	2 *	125
26	NPN–Si	Low Noise Audio Amp	–	508	0.1	120	120	5	350 Min	0.2	100
27	PNP–Ge	High Current, High Gain Low Saturation Vltg Applications	TO3	1a	60	60	45	30	130	170	2KH_Z
28	PNP–Ge	High Current, High Gain, Low Saturation Vltg Applications	TO68	2	60	60	45	30	130	170	2KH_Z
29	NPN–Si	High Current, High Power Switching t_f = 0.3µs Typ (Compl to NTE30)	TO3	1a	50	80	80	5	17	300	2
30	PNP–Si	High Current, High Power Switching t_f = 0.3µs Typ (Compl to NTE29)	TO3	1a	50	80	80	5	25	300	2
31	NPN–SI	TV Sound Output, TV Vertical Output, AF Driver Output (Compl to NTE32)	Giant TO92	3b	1	160	160	6	100 Min	0.9	20 Min

MP = Matched Pairs
*T_C = 25°C

**Denotes Surface Mount Types

ATR and FTR packages are designed for automatic insertion
See Diagrams, beginning on Page 1–42

NTE Type Number	Polarity and Material	Description and Application	Case Style	Diag. No.	Maximum Collector Current (Amps)	Maximum Breakdown Voltage			Typical Forward Current Gain	Maximum Collector Power Dissipation (Watts)	Typical Freq. (MH_Z)
						Collector to Base (Volts)	Collector to Emitter (Volts)	Emitter to Base (Volts)			
					I_C	BV_{CBO}	BV_{CEO}	BV_{EBO}	h_{FE}	P_D	f_T
32	PNP–Si	TV Sound & Vertical Output (Compl to NTE31)	Giant TO92	3b	1	160	160	6	100 Min	0.9	15 Min
33	NPN–Si	High Voltage Power Amp Output Stage (Compl to NTE34)	TB–34	4	15	160	160	5	120 Min	150	80
34	PNP–Si	Pwr Amp Applications (Compl to NTE33)	TB–34	4	15	160	160	5	120 Min	150	60
36	NPN–Si	AF Pwr Amp, High Current Switching (Compl to NTE37)	TO3P	59a/ 59alt	12	160	140	6	100	100	15
36MP	NPN–Si	Matched Pair of NTE36									
37	PNP–Si	AF Pwr Amp, High Current Switching (Compl to NTE36)	TO3P	59a/ 59alt	12	160	140	6	100	100	15
37MCP	NPN/PNP Si	Matched Compl Pair Contains 1 Ea. NTE36 & NTE37									
38	PNP–Si	High Voltage, Medium Pwr Switching (Compl to NTE175)	TO66	6a	2	400	350	6	50	35	20
39	PNP–Si	Line–Operated Series Pass and Switching Reg. (Compl to NTE157)	TO126	7a	0.5	300	300	3	92	20	–
40	NPN–Si	Dual, Differential Amp, High Gain, Lo Noise, Common Emitter (Compl to NTE41)	SIP–5	8a	0.05	100	100	5	400 Min	0.2/Unit 0.4 Total	100 Min
41	PNP–Si	Dual, Differential Amp, High Gain, Lo Noise, Common Emitter (Compl to NTE40)	SIP–5	8a	0.05	100	100	5	400 Min	0.2/Unit 0.4 Total	100 Min
42	NPN–Si	Dual, Differential Amp, High Gain, Lo Noise, Common Emitter (Compl to NTE43)	SIP–5	8a	0.1	50	50	5	400 Min	0.2/Unit 0.4 Total	100 Min
43	PNP–Si	Dual, Differential Amp, High Gain, Lo Noise, Common Emitter (Compl to NTE42)	SIP–5	8a	0.1	50	50	5	400 Min	0.2/Unit 0.4 Total	100 Min
44	NPN–Si	Dual, High Gain, Lo Noise Bias Amp, Common Base (Compl to NTE45)	SIP–5	8b	0.1	100	100	5	400 Min	0.2/Unit 0.4 Total	100
45	PNP–Si	Dual, High Gain, Lo Noise Bias Amp, Common Base (Compl to NTE44)	SIP–5	8b	0.1	100	100	5	400 Min	0.2/Unit 0.4 Total	100
46	NPN–Si	Darlington, Gen Purp Amp, Preamp, Driver	TO92	9a	0.5	100	100	12	10000 Min	0.625	200
47	NPN–Si	High Gain, Lo Noise Amp NF @ $10H_Z$, –0.5dB Typ	TO92	9a	0.2	45	45	6.5	1150	0.625	160
48	NPN–Si	Darlington, High Current, Gen Purp Amp	Giant TO92	3a	1	60	50 (CES)	12	25000 Min	2.5* 1	100 Min
49	NPN–Si	Gen Purp, High Voltage Amp, Driver (Compl to NTE50)	TO202	10a	2	120	100	4	140	10	100
50	PNP–Si	Gen Purp, High Voltage Amp, Driver (Comp to NTE49)	TO202	10a	2	120	100	4	140	10	100

MP = Matched Pairs
*$T_C = 25°C$

**Denotes Surface Mount Types

See Diagrams, beginning on Page 1–42

NTE Type Number	Polarity and Material	Description and Application	Case Style	Diag. No.	Maximum Collector Current (Amps)	Maximum Breakdown Voltage: Collector to Base (Volts)	Maximum Breakdown Voltage: Collector to Emitter (Volts)	Maximum Breakdown Voltage: Emitter to Base (Volts)	Typical Forward Current Gain	Maximum Collector Power Dissipation (Watts)	Typical Freq. (MH_Z)
					I_C	BV_{CBO}	BV_{CEO}	BV_{EBO}	h_{FE}	P_D	f_T
51	NPN–Si	High Voltage/Speed Switching Switchmode Applications t_f=0.4µs Typ	TO220	11a	4	700	400	9	30	75	4 Min
52	NPN–Si	High Voltage/Speed Switching Switchmode Applications t_f=0.17µs Typ	TO3	1a	5	750	450	6	17	125	–
53	NPN–Si	High Voltage/Speed Switching Switchmode Applications t_f=0.7µs Typ	TO3	1a	15	850	400	9	25	175	6 Min
54	NPN–Si	High Freq. Driver for Audio Amplifiers (Compl to NTE55)	TO220	11a	8	150	150	5	100	50	30 Min
54MP	NPN–Si	Matched Pair of NTE54									
55	PNP–Si	High Freq. Driver for Audio Amplifiers (Compl to NTE54)	TO220	11a	8	150	150	5	120	50	30 Min
55MCP	NPN/PNP Si	Matched Compl Pair Contains 1 Ea. NTE54 & NTE55									
56	NPN–Si	High Gain Switch and Pass Regulator	TO220	11a	3	100	80	6	500 Min	30	15
58	NPN–Si	High Pwr Audio Output (Compl to NTE59)	–	13	17	200	200	6	30 Min	200	20
59	PNP–Si	High Pwr Audio Output (Compl to NTE58)	–	13	17	200	200	6	30 Min	200	20
60	NPN–Si	High Pwr Audio, Disk Head Positioner, Linear Applications (Compl to NTE61)	TO3	1a	20	140	140	5	150	250	2 Min
60MP	NPN–Si	Matched Pair of NTE60									
61	PNP–Si	High Pwr Audio, Disk Head Positioner, Linear Applications (Compl to NTE60)	TO3	1a	20	140	140	5	150	250	2 Min
61MCP	NPN/PNP Si	Matched Compl Pair Contains 1 Ea.NTE60 & NTE61									
61MP	PNP–Si	Matched Pair of NTE61									
62	NPN–Si	High Voltage Horiz Output t_f=1.0µs Max	TO3	1a	3	2500	900	6	7	50	–
63	NPN–Si	High Gain, Low Noise, Wideband, Sm Signal Amplifier P_G=7.5dB @ 2 GH_Z, NF = 4dB @ 2 GH_Z	–	14	0.04	20	12	3	40	0.4	5GH_Z
64	NPN–Si	UHF/Microwave Amp/Hi Speed Sw, P_G = 10dB @ 1 GH_Z, NF = 2.5dB @ 1 GH_Z	–	14	0.03	25	15	3	80	0.375	4.5GH_Z
65	NPN–Si	High Voltage, Low Noise for CATV, MATV	–	175	0.025	20	15	2	70	0.18	6GH_Z
68	PNP–Si	Gen Purp High Power Audio Amp, Disk Head Positioners (Compl to NTE388)	TO3	1a	16	400	250	5	30	250*	4 Min
68MCP	PNP/NPN Si	Matched Compl Pair Contains 1 Ea. NTE68 & NTE388									
69	NPN–Si	UHF/VHF Amplifier	TO92	9b	0.05	35	25	3	60	1*	1100
70	NPN–Si	High Voltage Power Amp, Switch	TO63	15	50	180	150	6	30 Min	250	–

MP = Matched Pairs **Denotes Surface Mount Types
*T_C = 25°C

See Diagrams, beginning on Page 1–42

NTE Type Number	Polarity and Material	Description and Application	Case Style	Diag. No.	Maximum Collector Current (Amps)	Maximum Breakdown Voltage: Collector to Base (Volts)	Collector to Emitter (Volts)	Emitter to Base (Volts)	Typical Forward Current Gain	Maximum Collector Power Dissipation (Watts)	Typical Freq. (MH_Z)
					I_C	BV_{CBO}	BV_{CEO}	BV_{EBO}	h_{FE}	P_D	f_T
71	NPN–Si	High Current Amp, Fast Switch	TO63	15	20	150	90	7	20 Min	200	20
72	NPN–Si	High Current Amp, Fast Switch	TO61 Isol	16	10	120	100	6	30 Min	115	30
73	NPN–Si	High Voltage Amp, Switch $t_f = 1.0\mu s$	TO61	17	10	220	200	8	15 Min	85	40
74	NPN–Si	Amp, General Purpose, Switch	TO59	18c	7	100	100	6	60 Min	60	30
75	NPN–Si	High Power Amp, Switch	TO111	19	5	100	80	8	40 Min	50	50 Min
76	NPN–SI	Broadband CATV Amp	TO117	20	0.4	50	30	5	30 Min	5	1500
76MP	NPN–Si	Matched Pair of NTE76									
77	NPN–Si	Broadband CATV Driver	TO39	21a	0.4	50	30	5	30 Min	3.5	1500
78	NPN–Si	Series Modulation CB $P_O = 3W$ $27MH_Z$ Communication Systems	TO202M/ TO220	22a/ 11a	0.6	36	18	4	5 Min	5	–
79	NPN–Si	Low & Mid Band VHF CB P_O=9W $27MH_Z$ Comm Syst.	TO202M	22a	2	36	18	4	5 Min	15	–
81	Dual NPN Si	Differential Amp, General Purpose Amp & Switching	TO78	23	0.5	75	40	6	100 Min	2.5 Total	250
82	Dual PNP Si	Differential Amp, General Purpose Amp & Switching	TO78	23	0.6	60	60	5	100 Min	2.5 Total	320
85	NPN–Si	General Purpose Amp, Hi–Fi Drivers	*TO92	9c	0.4	70	70 (CES)	4	120 Min	0.625	200 Min
87	NPN–Si	Hi Power Audio,Switching, Converters & Inverters (Compl to NTE88)	TO3	1a	10	250	250 (CEX)	5	20 Min	200	–
87MP	NPN–Si	Matched Pair of NTE87									
88	PNP–Si	Hi Power Audio, Switching, Converters & Inverters (Compl to NTE87)	TO3	1a	10	250	250 (CEX)	5	20 Min	200	–
88MP	PNP–Si	Matched Pair of NTE88									
88MCP	NPN/PNP Si	Matched Compl Pair Contains 1 Ea. NTE87 & NTE88	TO3	1a	10	250	250 (CEX)	5	20 Min	200	–
89	NPN–Si	Color TV Horizontal Output w/Internal Damper Diode $t_f = 1.0\mu s$ Max	TO3	1a	7	1500	600	6	8	50	–
90	NPN–Si	General Purpose High Gain Amp (Compl to NTE91)	Giant TO92	3b	0.05	120	120	5	400 Min	0.75	350
91	PNP–Si	General Purpose High Gain Amp (Compl to NTE90)	Giant TO92	3b	0.05	120	120	5	400 Min	150	20
92	NPN–Si	Hi–Fi Power Amp, Audio Output (Compl to NTE93)	–	13	15	200	200	6	120	150	20
93	PNP–Si	Hi–Fi Power Amp, Audio Output (Compl to NTE92)	–	13	15	200	200	6	120	150	20
93MCP	NPN/PNP Si	Matched Compl Pair Contains 1 Ea. NTE92 & NTE93									
94	NPN–Si	High Voltage Inverter, Converter, Regulator and Switching Circuits	TO3	1a	5	300	300	5	40	100	2.5 Min
95	NPN–Si	High Voltage, High Power Switching	TO59 Isol Stud/ TO111	18b/ 18a	3	250	250	6	90 Min	40	40
96	NPN–Si	Switching Power Transistor	TO59 Isol Stud	18b	7	100	100	6	60 Min	60	30 Min

MP = Matched Pairs **Denotes Surface Mount Types
*$T_C = 25°C$

See Diagrams, beginning on Page 1–42

NTE Type Number	Polarity and Material	Description and Application	Case Style	Diag. No.	Maximum Collector Current (Amps)	Maximum Breakdown Voltage: Collector to Base (Volts)	Maximum Breakdown Voltage: Collector to Emitter (Volts)	Maximum Breakdown Voltage: Emitter to Base (Volts)	Typical Forward Current Gain	Maximum Collector Power Dissipation (Watts)	Typical Freq. (MH_Z)
					I_C	BV_{CBO}	BV_{CEO}	BV_{EBO}	h_{FE}	P_D	f_T
97	NPN–Si	HV Darlington Pwr Amp, Fast Sw	TO3	1a	10	500	400	8	40 Min	150	–
98	NPN–Si	HV Darlington Pwr Amp, Fast Sw	TO3	1a	20	700	500	8	40 Min	175	–
99	NPN–Si	HV Darlington Pwr Amp, Fast Sw	TO3	1a	50	600	400	8	25 Min	250	–
100	PNP–Ge	Oscillator, Mixer for AM Radio, Medium Speed Switch (Compl to NTE101)	TO5	25a	0.3	25	20 (CER)	12	40 @ $455KH_Z$	0.15	5
101	NPN–Ge	Oscillator, Mixer for AM Radio, Medium Speed Switch (Compl to NTE100)	TO5	25a	0.3	25	20 (CER)	20	40 @ $455KH_Z$	0.15	5
102	PNP–Ge	Power Output, Driver, Switch (Compl to NTE103)	TO5	25a	0.3	30	16 (CER)	25	100	0.15	–
102A	PNP–Ge	Medium Power Amplifier (Compl to NTE103A)	TO1	26	1	32	32 (CES)	10	120	0.65	–
103	NPN–Ge	Power Output Driver, Switch (Compl to NTE102)	TO5	25a	0.3	30	16 (CER)	25	115	0.15	–
103A	NPN–Ge	Medium Power Amplifier (Compl to NTE102A)	TO1	26	1	32	32 (CES)	10	110	0.65	–
104	PNP–Ge	Audio Power Amp	TO3	1a	10	50	35 (CER)	10	90	100	$10KH_Z$
104MP	PNP–Ge	Matched Pair of NTE104									
105	PNP–Ge	Audio Powr Amp	TO36	27	15	50	35 (CER)	20	90	150	$10KH_Z$
106	PNP–Si	Amp, Osc, FM Mixer, Ultra Hi Speed Switch	TO18	28a	0.05	35	15	4.5	50 Min	0.35	650 Min
107	NPN–Si	UHF Oscillator for Tuner, High Frequency	TO92	9c	0.05	30	12	3	75	0.2	1000
108	NPN–Si	RF–IF Amp and Osc	TO92	9a	0.05	30	15	2	20 Min	0.625	800
108–1	NPN–Si		TO106	29a							
121	PNP–Ge	Audio Power Amp	TO3	1a	5	60	30	30	75 Min	106	4kHz
121MP	PNP–Ge	Matched Pair Of NTE121									
123	NPN–Si	Amp, Audio to VHF Freq., Sw	TO39	21a	0.8	75	40	6	200	0.8	300 Min
123A	NPN–Si	Amp, Audio to VHF Freq., Switch (Compl to NTE159M)	TO18	28a	0.8	75	40	6	200	0.4	300 Min
123AP	NPN–Si	Amp, Audio to VHF Freq., Driver (Compl to NTE159)	TO92	9a	0.6	75	40	6	200	0.625	300 Min
124	NPN–Si	High Voltage Power Output Line Operated Equipment	TO66	6a	0.15	300	300	5	100	20	10
126	PNP–Ge	RF–IF Amp, TV, Radio, High Speed Switch	TO18	28a	0.2	25	18 (CES)	1	60	0.2	250
126A	PNP–Ge	RF–IF Amp, Mixer, High Speed Switch	TO18	28a	0.05	15	15	3	40	0.3	250
127	PNP–Ge	Amp, Power Output, Horizontal and Vertical Deflection	TO3	1a	10	320	320 (CES)	2	15	56	1
128	NPN–Si	Audio Output, Video, Driver (Compl to NTE129)	TO39	21a	1	120	80	7	90 Min	1	100 Min
128P	NPN–Si	Gen Purpose Amp (Compl to NTE129P)	TO237	413a	1	100	80	5	100 Min	1	150
129	PNP–Si	Audio Output, Video, Driver (Compl to NTE128)	TO39	21a	1	90	80	7	90 Min	1	150 Min

MP = Matched Pairs **Denotes Surface Mount Types

*$T_C = 25°C$

See Diagrams, beginning on Page 1–42

TRANSISTORS BI-POLAR

NTE Type Number	Polarity and Material	Description and Application	Case Style	Diag. No.	Maximum Collector Current (Amps)	Maximum Breakdown Voltage			Typical Forward Current Gain	Maximum Collector Power Dissipation (Watts)	Typical Freq. (MH_Z)
						Collector to Base (Volts)	Collector to Emitter (Volts)	Emitter to Base (Volts)			
					I_C	BV_{CBO}	BV_{CEO}	BV_{EBO}	h_{FE}	P_D	f_T
129MCP	NPN/PNP Si	Matched Compl Pair Contains 1 Ea. NTE128 & NTE129	TO39	21a	1	90	80	7	90 Min	1	150 Min
129P	PNP–Si	Gen Purpose Amp (Compl to NTE128P)	TO237	413a	1	100	80	5	100 Min	2	125
130	NPN–Si	Audio Power Amp, Medium Speed Switch (Compl to NTE219)	TO3	1a	15	100	60	7	45	115	3
130MP	NPN–Si	Matched Pair of NTE130									
131	PNP–Ge	Audio Power Amp (Compl to NTE155)	Japanese TO66	30	1	32	32 (CES)	10	110	6	1
131MP	PNP–Ge	Matched Pair of NTE131									
152	NPN–Si	Audio Power Amp, Medium Speed Switch (Compl to NTE153)	TO220	11a	7	60	60	5	60	50	10
152MP	NPN–Si	Matched Pair NTE152									
153	PNP–Si	Audio Power Amp (Compl to NTE152)	TO220	11a	7	60	60	5	60	50	10
153MCP	NPN/PNP Si	Matched Compl Pair Contains 1 Ea. NTE152 & NTE153									
154	NPN–Si	High Voltage Video Output C_{cb} = 2.5 pf @ 2.0V	TO39	21a	0.2	300	300	7	100	1	80
155	NPN–Ge	Audio Power Amp (Compl to NTE131)	Japanese TO66	30	3 Peak	32	20	10	110	7.5	1
157	NPN–Si	Audio Power Amp, High Voltage Converter (Compl to NTE39)	TO126	7a	0.5	325	300	6	90	20	10 Min
158	PNP–Ge	Audio Power Amp	TO1	26	1	32	32	10	90	1.4	1.5
159	PNP–Si	Low Noise Audio Amp, Switch NF = 3dB @ 1KHz (Compl to NTE123AP)	TO92	9a	1	80	80	5	180	0.625	200
159MCP	PNP/NPN Si	Matched Compl Pair, Contains 1 Ea. NTE159 & NTE123AP									
159M	PNP–Si	Low Noise Audio Amp (Compl to NTE123A)	TO18	28a	0.6	60	60	5	100 Min	0.4	200 Min
160	PNP–Ge	RF–IF Amp, FM Mixer/Osc	TO72	31a	0.01	30	20 (CES)	0.3	50	0.1	550
161	NPN–Si	VHF–UHF Amp, Mixer/Osc	TO72	31a	0.05	45	45 (CES)	3	60	0.2	800
162	NPN–Si	TV Vertical Deflection	TO3	1a	10 Peak	500	300	5	20 Min	100	–
163A	NPN–Si	Color TV Horizontal Deflection	TO3	1a	6	700	700 (CEV)	5	10 Min	100	–
164	NPN–Si	Color TV Vertical Output	TO3	1a	1	1500	700 (CER)	5	30 Min	50	3
165	NPN–Si	Color TV Horizontal Output	TO3	1a	6	1500	1400 (CES)	5	8 Min	50	3
171	NPN–Si	Audio–Video Amp, Reg (Compl to NTE296)	TO202	10a	0.1	300	300	5	30 Min	6.25	75
172A	NPN–Si	Darlington Pre–Amp, Medium–Speed Switch	TO92	9c	0.3	40	40	12	7000 Min	0.4	60 Min
175	NPN–Si	Linear & Audio Power Amp (Compl to NTE38)	TO66	6a	3	500	300 (CER)	6	60	40	15

MP = Matched Pairs
*T_C = 25°C

**Denotes Surface Mount Types

See Diagrams, beginning on Page 1–42

NTE Type Number	Polarity and Material	Description and Application	Case Style	Diag. No.	Maximum Collector Current (Amps)	Maximum Breakdown Voltage			Typical Forward Current Gain	Maximum Collector Power Dissipation (Watts)	Typical Freq. (MH_Z)
						Collector to Base (Volts)	Collector to Emitter (Volts)	Emitter to Base (Volts)			
					I_C	BV_{CBO}	BV_{CEO}	BV_{EBO}	h_{FE}	P_D	f_T
176	PNP–Ge	DC Converter Audio Power Amp	TO39	21a	2	25	25	10	110	6	1.2
179	PNP–Ge	Audio Power Amp High Current Switch	TO3	1a	25	90	90 (CEX)	2	65 Min	106	0.5 Min
179MP	PNP–Ge	Matched Pair of NTE179									
180	PNP–Si	High Power Audio Amp (Compl to NTE181)	TO3	1a	30	100	100 (CER)	4	25 Min	200	2 Min
180MCP	NPN/PNP Si	Matched Compl Pair Contains 1 Ea. NTE181 & NTE180									
181	NPN–Si	High Power Audio Amp (Compl to NTE180)	TO3	1a	30	100	100 (CER)	4	25 Min	200	2 Min
181MP	NPN–Si	Matched Pair of NTE181									
182	NPN–Si	General Purpose Amplifier and High Speed Switch (Compl to NTE183)	TO127	33a	10	70	60	5	20 Min	90	2
183	PNP–Si	General Purpose Amplifier and High Speed Switch (Compl to NTE182)	TO127	33a	10	70	60	5	20 Min	90	2
184	NPN–Si	Audio Power Amplifier & Switching (Compl to NTE185)	TO126	7a	4	80	80	5	25 Min	40	2 Min
184MP	NPN–Si	Matched Pair of NTE184									
185	PNP–Si	Audio Power Amplifier & Switching (Compl to NTE184)	TO126	7a	4	80	80	5	25 Min	40	2 Min
185MCP	NPN/PNP Si	Matched Compl Pair Contains 1 Ea. NTE184 & NTE185									
186	NPN–Si	General Purpose Output and Driver Stages of Audio Amps (Compl to NTE187)	TO202	10b	3	70	60	5	100 Min	12.5	50
186A	NPN–Si	Medium Power Audio Amplifier (Compl to NTE187A)	TO202M	22a	3	40	50	5	120	10	150
187	PNP–Si	General Purpose Output & Driver Stages of Audio Amplifiers (Compl to NTE186)	TO202	10b	3	70	60	5	100 Min	12.5	50
187A	PNP–Si	Medium Power Audio Amplifier (Compl to NTE186A)	TO202M	22a	3	50	40	5	120	10	150
188	NPN–Si	High Voltage Amplifier & Driver (Compl to NTE189)	TO202N	34	2	80	80	4	60 Min	10	150
189	PNP–Si	High Voltage Amplifier & Driver (Compl to NTE188)	TO202N	34	2	80	80	4	60 Min	10	100
190	NPN–Si	High Voltage Amplifier for Horizontal Drive & Linear Applications	TO202N	34	1	180	180	5	40 Min	10	100
191	NPN–Si	High Voltage Video and Luminance Stages of TV (Compl to NTE240)	TO202N	34	0.5	300	300	6	40 Min	10	45 Min
192	NPN–Si	Audio Power Output (Compl to NTE193)	TO92HS	35a	1	70	70 (CES)	5	150	1* 0.7	120 Min
192A	NPN–Si	Audio Power Output (Compl to NTE193A)	TO92HS	35b	0.5	70	70 (CES)	5	120 Min	0.6	120
193	PNP–Si	Audio Power Output (Compl to NTE192)	TO92HS	35a	1	70	70 (CES)	5	150	1* 0.7	120 Min

MP = Matched Pairs **Denotes Surface Mount Types
*$T_C = 25°C$

See Diagrams, beginning on Page 1–42

NTE Type Number	Polarity and Material	Description and Application	Case Style	Diag. No.	Maximum Collector Current (Amps)	Maximum Breakdown Voltage: Collector to Base (Volts)	Maximum Breakdown Voltage: Collector to Emitter (Volts)	Maximum Breakdown Voltage: Emitter to Base (Volts)	Typical Forward Current Gain	Maximum Collector Power Dissipation (Watts)	Typical Freq. (MH_Z)
					I_C	BV_{CBO}	BV_{CEO}	BV_{EBO}	h_{FE}	P_D	f_T
193A	PNP–Si	Audio Power Output (Compl to NTE192A)	TO92HS	35b	0.5	70	70 (CES)	5	120 Min	0.6	120
194	NPN–Si	Gen Purp HV Amp, Hi–Speed Sw	TO92	9a	0.6	180	160	6	100	0.31	100 Min
195A	NPN–Si	RF Pwr Amp/Driver, CB (P_O 3.5W Min, 27MH_Z, 12.5V)	TO39	21a	1.5	70	70 (CER)	4	30 Min	8	150
196	NPN–Si	Audio Power Output & Medium Power Switching (Compl to NTE197)	TO220	11a	7	90	80 (CER)	5	20 Min	50* 1.8	4
197	PNP–Si	Audio Power Output & Medium Power Switching (Compl to NTE196)	TO220	11a	7	90	80 (CER)	5	20 Min	50* 1.8	4
198	NPN–Si	High Voltage Audio Output	TO220	11a	1	500	500 (CES)	5	80	40* 2	10 Min
199	NPN–Si	Lo–Noise, Hi–Gain Pre–Amp (Compl to NTE234)	TO92	9c	0.1	70	50	5	400 Min	0.36	90 Min
210	NPN–Si	Gen Purp Output & Driver (Compl to NTE211)	TO202	10a	1	90	75	5	120 Min	6.25* 1.33	200
211	PNP–Si	Gen Purp Output & Driver (Compl to NTE210)	TO202	10a	1	90	75	5	120 Min	6.25* 1.33	150 Min
213	PNP–Ge	High Power, High Gain Amplifier	TO36	27	30	75	60	40	75	170	2.7KH_Z
214	NPN–Si	Darlington Driver t_f = 1.8µs	TO3P	59a	10	70	60	6	5,000	60*	20
215	NPN–Si	Darlington Driver t_f = 1.6µs	TO3P	59a	8	110	100	6	4,000	60*	20
217	PNP–Si	High Speed Sw t_{on} = 40ns	TO237	413a	1	40	40	5	40 Min	1.2	175 Min
218	PNP–Si	Audio Power Output	TO66	6a	4	90	80	7	30 Min	25	4 Min
219	PNP–Si	Gen Purp Amplifier & Switch (Compl to NTE130)	TO3	1a	15	100	70 (CER)	7	20 Min	115	2.5 Min
219MCP	PNP/NPN Si	Matched Compl Pair Contains 1 Ea. NTE219 & NTE130									
224	NPN–Si	Final RF Power Output CB (P_O = 4W, 50MH_z)	TO39 w/Flange	37	2	60	60 (CEV)	2.5	60	10	200
225	NPN–Si	High Speed Switch & Linear Amp	TO39 w/Flange	37	1	450	350	7	40 Min	10	15
226	PNP–Ge	Audio Power Output	Japanese TO66	30	2	35	35 (CER)	6	100	12	0.7
226MP	PNP–Ge	Matched Pair of NTE226									
227	NPN–Si	HV Amp Video Output	TO237	413a	0.1	300	300	6	40 Min	2*	50 Min
229	NPN–Si	VHF Osc, Mixer, IF Amp P_G = 28dB @ 45MH_Z	TO92	9b	0.05	40	40	4	30 Min	0.425	500 Min
232	PNP–Si	Darlington Amp Pre–Amplifier NF = 2.0dB	TO92	9a	0.3	30	30	8	50000 Min	0.625	175
233	NPN–Si	Video IF, Oscillator	TO92	9a	0.1	30	30	3	45	0.625	300 Min
234	PNP–Si	Lo–Noise, Hi–Gain AF Pre–Amp (Compl to NTE199)	TO92	9c	0.05	60	50	5	400 Min	0.2	80 Min
235	NPN–Si	Final RF Pwr Output (P_O = 5W, 50MH_z)	TO220	11a	3 Pulse	65	65 (CER)	4	80	12	300

MP = Matched Pairs **Denotes Surface Mount Types
*T_C = 25°C

See Diagrams, beginning on Page 1–42

NTE Type Number	Polarity and Material	Description and Application	Case Style	Diag. No.	Maximum Collector Current (Amps)	Maximum Breakdown Voltage: Collector to Base (Volts)	Maximum Breakdown Voltage: Collector to Emitter (Volts)	Maximum Breakdown Voltage: Emitter to Base (Volts)	Typical Forward Current Gain	Maximum Collector Power Dissipation (Watts)	Typical Freq. (MH_Z)
					I_C	BV_{CBO}	BV_{CEO}	BV_{EBO}	h_{FE}	P_D	f_T
236	NPN–Si	Final RF Power Output, CB (P_O = 13W, 50MH_Z)	TO220	11a	8 Pulse	70	70 (CER)	4	20 Min	25	150
237	NPN–Si	Final RF Power Output, CB (P_O = 3.5W, 27MH_Z)	TO39HS	39	3 Pulse	80	40	5	50	10	250
238	NPN–Si	Color TV, Horiz Output	TO3	1a	8	1500	1500 (CEX)	5	8	100	–
240	PNP–Si	High Voltage, Low Saturation, Video Output (Compl to NTE191)	TO202N	34	0.5	300	300	5	70	10* 1	60 Min
241	NPN–Si	Audio Power Amp, Sw (Compl to NTE242)	TO220	11a	4	80	80	5	25 Min	60	2.5 Min
242	PNP–Si	Audio Power Amp, Sw (Compl to NTE241)	TO220	11a	4	80	80	5	25 Min	60	2.5 Min
243	NPN–Si	Darlington Pwr Amp (Compl to NTE244)	TO3	1a	8	80	80	5	2500	100	–
244	PNP–Si	Darlington Pwr Amp (Compl to NTE243)									
245	NPN–Si	Darlington Pwr Amp (Compl to NTE246)	TO3	1a	10	80	80	5	4000	150	–
246	PNP–Si	Darlington Pwr Amp (Compl to NTE245)									
247	NPN–Si	Darlington Pwr Amp (Compl to NTE248)	TO3	1a	12	100	100	5	3000	150	–
248	PNP–Si	Darlington Pwr Amp (Compl to NTE247)									
249	NPN–Si	Darlington Pwr Amp (Compl to NTE250)	TO3	1a	16	100	100	5	4000	150	–
250	PNP–Si	Darlington Pwr Amp (Compl to NTE249)									
251	NPN–Si	Darlington Pwr Amp (Compl to NTE252)	TO3	1a	20	100	100	5	2500	160	–
252	PNP–Si	Darlington Pwr Amp (Compl to NTE251)									
253	NPN–Si	Darlington Pwr Amp (Compl to NTE254)	TO126	7a	4	80	80	5	2500	40	–
253MCP	NPN/PNP Si	Matched Compl Pair Contains 1 Ea. NTE253 & NTE254									
254	PNP–Si	Darlington Pwr Amp (Compl to NTE253)									
255	NPN–Si	Horiz Dr, Amp	TO237	413a	0.5	325	300	6	110	2*	60
256	NPN–Si	Darlington w/Damper Diode t_f = 0.50ns	TO218	55a	28	600	400	10	30 Min	150	–
257	NPN–Si	Darlington Pwr Amp	TO127	33a	5	80	80	5	750 Min	70	–
259	NPN–Si	Darlington Pwr Amp	TO127	33a	8	100	100	5	4000	75	–
261	NPN–Si	Darlington Pwr Amp (Compl to NTE262)	TO220	11a	8	100	100	5	1000 Min	65	–
262	PNP–Si	Darlington Pwr Amp (Compl to NTE261)									
263	NPN–Si	Darlington Pwr Amp (Compl to NTE264)	TO220	11a	10	100	100	5	1000 Min	65	–

MP = Matched Pairs **Denotes Surface Mount Types
*T_C = 25°C

See Diagrams, beginning on Page 1–42

NTE Type Number	Polarity and Material	Description and Application	Case Style	Diag. No.	Maximum Collector Current (Amps)	Maximum Breakdown Voltage: Collector to Base (Volts)	Maximum Breakdown Voltage: Collector to Emitter (Volts)	Maximum Breakdown Voltage: Emitter to Base (Volts)	Typical Forward Current Gain	Maximum Collector Power Dissipation (Watts)	Typical Freq. (MH_Z)
					I_C	BV_{CBO}	BV_{CEO}	BV_{EBO}	h_{FE}	P_D	f_T
264	PNP–Si	Darlington Pwr Amp (Compl to NTE263)	TO220	11a	10	100	100	5	1000 Min	65	–
265	NPN–Si	Darlington Pwr Amp Switch	TO202	10a	0.5	50	50	13	10000 Min	6.25	–
266	NPN–Si	Darlington Pwr Amp Switch	TO202	10a	0.5	50	50	13	40000 Min	6.25	–
267	NPN–Si	Darlington Pwr Amp Switch	TO202	10a	0.5	30	30	13	90000 Min	6.25	–
268	NPN–Si	Darlington Pwr Amp (Compl to NTE269)	TO202	10a	2	50	50	13	1000 Min	10	–
269	PNP–Si	Darlington Pwr Amp (Compl to NTE268)									
270	NPN–Si	Darlington Pwr Amp Switch (Compl to NTE271)	TO218	55a	10	100	100	5	1000 Min	125	–
271	PNP–Si	Darlington Pwr Amp Switch (Compl to NTE270)									
272	NPN–Si	Darlington Pwr Amp Switch (Compl to NTE273)	TO202N	34	2	50	40	12	25000 Min	10	–
273	PNP–Si	Darlington Pwr Amp Switch (Compl to NTE272)									
274	NPN–Si	Darlington Pwr Amp Switch (Compl to NTE275)	TO66	6a	4	80	80	5	3000	50	–
275	PNP–Si	Darlington Pwr Amp Switch (Compl to NTE274)									
278	NPN–Si	Broad Band RF Amp, CATV/MATV Amp	TO39	21a	0.4	40	20	3	40 Min	3.5	1,400
280	NPN–Si	Audio Amp Output (Compl to NTE281)	TO3	1a	12	150	150	5	70	100	5
280MP	NPN–Si	Matched Pair of NTE280									
281	PNP–Si	Audio Power Amp (Compl to NTE280)	TO3	1a	12	150	150	5	70	100	6
281MCP	NPN/PNP Si	Matched Compl Pair Contains 1 Ea. NTE280 & NTE281									
283	NPN–Si	High Voltage, High Current Switch & Horizontal Output	TO3	1a	10	800	325	8	10 Min	100	6
284	NPN–Si	Audio Amplifier Output (Compl to NTE285)	TO3	1a	16	180	180	5	70	150	6
284MP	NPN–Si	Matched Pair of NTE284									
285	PNP–Si	Audio Amplifier Output (Compl to NTE284)	TO3	1a	16	180	180	5	70	150	6
285MP	PNP–Si	Matched Pair of NTE285									
285MCP	NPN/PNP Si	Matched Compl Pair Contains 1 Ea. NTE284 & NTE285									
287	NPN–Si	High Voltage, Low Saturation, Low Cap, General Purpose Amp (Compl to NTE288)	TO92	9a	0.5	300	300	8	40 Min	0.625	50 Min
288	PNP–Si	High Voltage, Low Saturation, General Purpose Amp (Compl to NTE287)	TO92	9a	0.5	300	300	5	40 Min	0.625	50 Min

MP = Matched Pairs **Denotes Surface Mount Types
*T_C = 25°C

See Diagrams, beginning on Page 1–42

TRANSISTORS BI–POLAR

NTE Type Number	Polarity and Material	Description and Application	Case Style	Diag. No.	Maximum Collector Current (Amps)	Maximum Breakdown Voltage: Collector to Base (Volts)	Maximum Breakdown Voltage: Collector to Emitter (Volts)	Maximum Breakdown Voltage: Emitter to Base (Volts)	Typical Forward Current Gain	Maximum Collector Power Dissipation (Watts)	Typical Freq. (MH_Z)
					I_C	BV_{CBO}	BV_{CEO}	BV_{EBO}	h_{FE}	P_D	f_T
289	NPN–Si	Audio Power Amp and Switch (Compl to NTE290)	U83/ TO92	40/ 9c	0.8	35	30	5	120 Min	0.6	100
289MP	NPN–Si	Matched Pair of NTE289	TO92	9c							
289A	NPN–Si	Audio Power Amp (Compl to NTE290A)	TO92	9c	0.5	100	80	5	100 Min	0.6	120
289AMP	NPN–Si	Matched Pair of NTE289A									
290	PNP–Si	Audio Power Amp and Switch (Compl to NTE289)	U83/ TO92	40/ 9c	0.8	35	30	5	120 Min	0.6	140
290A	PNP–Si	Audio Power Amp (Compl to NTE289A)	TO92	9c	0.5	100	80	5	100 Min	0.6	120
290AMCP	NPN/PNP Si	Mathced Compl Pair Contains 1 Ea. NTE289A & NTE290A									
291	NPN–Si	General Purpose Medium Power Amp and Switch (Compl to NTE292)	TO220	11a	4	130	120	5	70	40	4 Min
292	PNP–Si	General Purpose Medium Power Amp and Switch (Compl to NTE291)	TO220	11a	4	130	120	5	70	40	5 Min
292MCP	PNP/NPN Si	Matched Compl Pair Contains 1 Ea. NTE292 & NTE291									
293	NPN–Si	Audio Amp and Driver (Compl to NTE294)	Giant TO92	3b	1	60	50	5	120 Min	1 w/Heat Sink 0.75	200
293MP	NPN–Si	Matched Pair of NTE293									
294	PNP–Si	Audio Amp and Driver (Compl to NTE293)	Giant TO92	3b	1	60	50	5	120 Min	1 w/Heat Sink 0.75	200
295	NPN–Si	RF Power Output/Driver	TO126	7a	1.5	80	40	5	20 Min	5	150 Min
296	PNP–Si	High Voltage, Gen Purp Amp C_{cb} = 8.0pf (Compl to NTE171)	TO202	10a	0.5	300	300	5	80	10* 2	45 Min
297	NPN–Si	Audio Amp, Driver (Compl to NTE298)	Giant TO92	3b	0.5	80	80	5	130 Min	0.75	120
297MP	NPN–Si	Matched Pair of NTE297									
298	PNP–Si	Audio Amp, Driver (Compl to NTE297)	Giant TO92	3b	0.5	80	80	5	130 Min	0.75	120
299	NPN–Si	RF Power Amp, Driver	TO202	10c	1	75	35	4	70 Min	4	–
300	NPN–Si	Audio Power Amp (Compl to NTE307)	TO202	10c	1.5	50	40	5	90 Min	7	65
300MP	NPN–Si	Matched Pair of NTE300									
302	NPN–Si	AM, CB Transmitter Driver, Switch	B2	60b	1.5 Peak	100	50	6	199 Min	7.9* 0.95	70
306	NPN–Si	AM, CB Transmitter Driver, Switch	B2	60a	1.5 Peak	100	50	6	199 Min	7.9* 0.95	70
307	PNP–Si	Audio Power Amp (Compl to NTE300)	TO202	10c	1.5	50	40	5	90 Min	7	65
311	NPN–Si	Freq–Multiplier, Amp, Driver Osc, VHF–UHF Pre Driver	TO39	21a	0.4	55	30	3.5	25 Min	5	800 Min
313	NPN–Si	VHF Mixer and VHF/RF Amp, High Gain, Low Noise	–	41	0.02	30	30	4	60	0.15	530

MP = Matched Pairs **Denotes Surface Mount Types
*T_C = 25°C

See Diagrams, beginning on Page 1–42

NTE Type Number	Polarity and Material	Description and Application	Case Style	Diag. No.	Maximum Collector Current (Amps)	Maximum Breakdown Voltage: Collector to Base (Volts)	Maximum Breakdown Voltage: Collector to Emitter (Volts)	Maximum Breakdown Voltage: Emitter to Base (Volts)	Typical Forward Current Gain	Maximum Collector Power Dissipation (Watts)	Typical Freq. (MH_z)
					I_C	BV_{CBO}	BV_{CEO}	BV_{EBO}	h_{FE}	P_D	f_T
315	NPN–Si	Medium Power Audio Amp	–	42	1	100	50	6	199 Min	0.75	–
316	NPN–Si	High Gain, Lo–Noise UHF Small Signal Amp (NF = 4.5dB Max @ 450MH_z)	TO72	31a	0.05	30	15	3.5	25 Min	0.2	1400
317	NPN–Si	CB & Amateur RF Power Output (P_O = 70W, 14–30MH_z)	W52	43	15	36	36 (CES)	4	10 Min	220	–
318	NPN–Si	CB & Amateur RF Power Output (P_O = 50W, 14–30MH_z)	W52	43	6	36	36 (CES)	4	5 Min	80	–
319	NPN–Si	VHF AMP with Forward AGC	TO72	31b	0.05	20	20	3	80	0.26* 0.175	300 Min
319P	NPN–Si	VHF Amp with Forward AGC	TO92	9b	0.05	40	30	4	80	0.5	300 Min
320	NPN–Si	RF Power Amp (P_O = 40W, 175MH_z)	–	45	6	36	36 (CES)	4	5 Min	80	200
320F	NPN–Si	RF Power Amp (P_O = 40W, 175MH_z)	–	47	6	36	18	4	5 Min	80	200
322	NPN–Si	RF Power Output (P_O = 3.5W, 27MH_z)	TO202N	34	0.5	65	65 (CES)	3	10 Min	10* 1	100
323	PNP–Si	Amp, General Purpose, Switch (Compl to NTE324)	TO39	21a	1.5	120	100	5	80	0.8	20 Min
324	NPN–Si	Amp, General Purpose, Switch (Compl to NTE323)	TO39	21a	1.5	120	100	5	90	0.8	20 Min
325	NPN–Si	RF Power, Amateur Radio (P_o = 50W, 14–30MH_Z)	T72H	46	7.5	40	20	4	10 Min	115	–
327	NPN–Si	Power Amp, Switch for Industrial Applications	TO3	1a	25	180	150	6	30 Min	200	40 Min
328	NPN–Si	Power Amp, Switch	TO3	1a	15	150	130 (CER)	7	12 Min	140	60 MIn
329	NPN–Si	RF Power Amp, CB, (P_o = 3.5W, 27MH_Z)	TO39	21a	1.5 Peak	–	30	2.5	–	5	–
330	PNP–Ge	High Power Switch for Motor Drive Controls and Low Loss Reg	TO36	27	25	50	40	30	30	170	–
331	NPN–Si	Audio Power Amp, Switch (Compl to NTE332)	TO220	11a	15	100	100	5	40 Min	90	3 Min
331MP	NPN–Si	Matched Pair of NTE331									
332	PNP–Si	Audio Power Amp, Switch (Compl to NTE331)	TO220	11a	15	100	100	5	40 Min	90	3 Min
332MCP	NPN/PNP Si	Matched Compl Pairs Contains 1 Ea. NTE331 & NTE332									
333	NPN–Si	RF Power Output (P_O = 60W, 14–30MH_Z)	W52K	47	15	36 (CES)	18	4	10 Min	175	–
334	NPN–Si	RF Power Output (P_O = 60W, 14–30MH_Z)	T72H	46	15	36 (CES)	18	4	10 Min	175	–
335	NPN–Si	RF Power Output (P_O = 80W, 14–30MH_Z)	W52N	43	20	45	25	4	10 Min	250	–
336	NPN–Si	RF Power Output (P_O = 80W, 14–30MH_Z)	T93D	48	20	45	25	4	10 MIn	250	–
337	NPN–Si	RF Power Amp, Driver (P_O = 8W, 27–50MH_Z)	T72H	46	2	36	18	4	5 Min	20	–

MP = Matched Pairs
*T_C = 25°C
**Denotes Surface Mount Types

See Diagrams, beginning on Page 1–42

NTE Type Number	Polarity and Material	Description and Application	Case Style	Diag. No.	Maximum Collector Current (Amps)	Maximum Breakdown Voltage: Collector to Base (Volts)	Maximum Breakdown Voltage: Collector to Emitter (Volts)	Maximum Breakdown Voltage: Emitter to Base (Volts)	Typical Forward Current Gain	Maximum Collector Power Dissipation (Watts)	Typical Freq. (MHz)
					I_C	BV_{CBO}	BV_{CEO}	BV_{EBO}	h_{FE}	P_D	f_T
338	NPN–Si	RF Power Amp Driver (P_O = 20W, 27–50MHz)	T72H	46	3.5	48	24	4	15	50	–
338F	NPN–Si	RF Power Driver & Output, (P_O = 20W, 27–50MHz)	W52K	47	4.5	36	18	4	10 Min	80	–
339	NPN–Si	RF Power Amp, Output Stage (P_O = 40W, 27–50MHz)	T75B	48	7	48	24	4	3 Min	100	–
340	NPN–Si	RF Power Output, High Freq (P_O = 0.6W, 130–175MHz)	Giant TO92	3b	0.5	36	18	4	70	0.75	700
341	NPN–Si	RF Power Output (P_O = 4W, 130–175MHz)	TO39EC	21b	0.64	36	18	4	5 Min	8	–
342	NPN–Si	RF Power Output (P_O = 7W, 130–175MHz)	B26	61	2	35	17	4	50	12.5	–
343	NPN–Si	RF Power Output (P_O = 14W, 130–175MHz)	B26	61	3.5	35	17	4	50	25	–
344	NPN–Si	RF Power Output (P_O = 14W, 130–175MHz)	–	50	7	35	17	4	50	50	–
345	NPN–Si	RF Power, Marine Radio (P_O = 30W, 130–175MHz)	T72H	46	4	36	18	4	5 Min	65	–
346	NPN–Si	RF Driver & Predriver for VHF & UHF, (P_O = 1W, 130–175MHz)	TO39	21a	0.4	40	20	2	10 Min	3.5* 1	500 Min
347	NPN–Si	RF Power Amp (P_O = 3W, 130–175MHz)	T71	51	0.6	36	18	4	5 Min	15	–
348	NPN–Si	RF Power Amp (P_O = 4W, 130–175MHz)	T72H	46	1	36	18	4	5 Min	12	–
349	NPN–Si	RF Power Amp (P_O = 10W, 130–175MHz)	T72H	46	2	36	18	4	5 Min	30	–
350	NPN–Si	RF Power Amp (P_O = 15W, 130–175MHz)	T72H	46	2.5	36	18	4	5 Min	31	–
350F	NPN–Si	RF Power Amp (P_O = 15W, 130–175MHz)	W52	47	2.5	36	18	4	5 Min	31	–
351	NPN–Si	RF Power Amp (P_O = 25W, 130–175MHz)	T72H	46	4	36	18	4	5 Min	65	–
352	NPN–Si	RF Power Amp, VHF/FM (P_O = 80W, 130–175MHz)	W65	52	20	36	18	4	35	250	–
353	PNP–Si	RF Power Amp (P_O = 4W, 130–175MHz)	W52K	47	1	36	18	4	5 Min	8	–
354	PNP–Si	RF Power Amp (P_O = 15W, 130–175MHz)	W52K	47	2.5	36	18	4	15 Min	20	–
355	PNP–Si	RF Power Amp (P_O = 30W, 130–175MHz)	W52K	47	4	36	18	4	15 Min	40	–
356	PNP–Si	RF Power Amp (P_O = 40W, 130–175MHz)	W52K	47	6	36	18	4	15 Min	60	–
357	NPN–Si	RF Power Amp (P_O = 7W, 125–175MHz)	T71	51	1	65	35	4	5 Min	15	–
359	NPN–Si	RF Power Amp (P_O = 20W, 125–175MHz)	T72H	46	3	65	35	4	5 Min	30	–
360	NPN–Si	RF Power Amp (P_O = 40W, 125–175MHz)	T72H	46	5	65	35	4	5 Min	60	200 Min
361	NPN–Si	RF Power Amp (P_O = 2W, 407–512MHz)	TO39EC	21b	0.4	36	16	4	20 Min	5	–

MP = Matched Pairs
*T_C = 25°C

**Denotes Surface Mount Types

See Diagrams, beginning on Page 1–42

NTE Type Number	Polarity and Material	Description and Application	Case Style	Diag. No.	Maximum Collector Current (Amps)	Maximum Breakdown Voltage: Collector to Base (Volts)	Maximum Breakdown Voltage: Collector to Emitter (Volts)	Maximum Breakdown Voltage: Emitter to Base (Volts)	Typical Forward Current Gain	Maximum Collector Power Dissipation (Watts)	Typical Freq. (MH_Z)
					I_C	BV_{CBO}	BV_{CEO}	BV_{EBO}	h_{FE}	P_D	f_T
362	NPN–Si	RF Power Amp (P_O = 2W, 407–512MH_Z)	–	53	0.40	36	16	4	80	5	–
363	NPN–Si	RF Power Amp (P_O = 4W, 407–512MH_Z)	–	53	0.80	36	16	4	80	15	–
364	NPN–Si	RF Power Amp (P_O = 10W, 407–512MH_Z)	–	53	2	36	16	4	80	37.5	–
365	NPN–Si	RF Power Amp (P_O = 15W, 407–512MH_Z)	W65	52	3	36	16	4	70	50	–
366	NPN–Si	RF Power Amp (P_O = 25W, 407–512MH_Z)	W65	52	6	36	16	4	70	117	–
367	NPN–Si	RF Power Amp (P_O = 45W, 407–512MH_Z)	W65	52	8	36	16	4	70	175	–
368	NPN–Si	RF Power Amp (P_O = 60W, 407–512MH_Z)	W65	52	10	36	16	4	70	233	–
369	NPN–Si	Vertical Deflection, Switch	TO66	6a	3 Peak	800	400	6	30 Min	40	7
373	NPN–Si	Audio Amp, Driver (Compl to NTE374)	TO126	7a	1.5	180	160	5	190	20	140
374	PNP–Si	Audio Amp, Driver (Compl to NTE373)	TO126	7a	1.5	180	160	5	190	20	140
375	NPN–Si	Vertical Deflection (Compl to NTE398)	TO220	11a	3	200	150	6	150	25	8
376	NPN–Si	TV Power Supply Driver/ Audio Output	TO220	11a	0.2	300	300	5	100	15*	70
377	NPN–Si	Power Amp Driver, Output, Sw (Compl to NTE378)	TO220	11a	10	80	80	5	60 Min	50	50
378	PNP–Si	Power Amp Driver, Output, Sw (Compl to NTE377)	TO220	11a	10	80	80	5	60 Min	50	50
379	NPN–Si	Power Amp, High Voltage, Sw t_r = 0.45µs Typ	TO220	11a	12	700	400	9	12	100	4 Min
382	NPN–Si	Audio Frequency Driver (Compl to NTE383)	R245	42	1	120	100	5	200	0.9	140
383	PNP–Si	Audio Frequency Driver (Compl to NTE382)	R245	42	1	120	100	5	200	0.9	140
384	NPN–Si	High Voltage Power Amp/Switch t_r = 0.3µs Typ	TO66	6a	7	375	350	9	28	45	1 Min
385	NPN–Si	Audio Power Amp, Switch t_r = 0.085µs Typ	TO3	1a	10	550	350	6	17	150	–
386	NPN–Si	Audio Power Amp, Switch t_r = 0.3µs Typ	TO3	1a	20	800	500	6	20	175	–
387	NPN–Si	Power Amp, Switch t_r = 0.35µs Max	TO3	1a	50	180	150	6	80	250	30 Min
387MP	NPN–Si	Matched Pair of NTE387									
388	NPN–Si	High Power Amp for Audio Linear Applications (Compl to NTE68)	TO3	1a	16	400	250	5	35	250	4 Min
389	NPN–Si	Horizontal Output	TO3	1a	6	1500	1500 (CES)	5	5 Min	100	4 Min
390	NPN–Si	Power Amp and High Speed Sw (Compl to NTE391)	TO218	55a	10	100	100	5	40 Min	80	3
391	PNP–Si	Power Amp and High Speed Sw (Compl to NTE390)	TO218	55a	10	100	100	5	40 Min	80	3

MP = Matched Pairs **Denotes Surface Mount Types
*T_C = 25°C

See Diagrams, beginning on Page 1–42

NTE Type Number	Polarity and Material	Description and Application	Case Style	Diag. No.	Maximum Collector Current (Amps)	Maximum Breakdown Voltage			Typical Forward Current Gain	Maximum Collector Power Dissipation (Watts)	Typical Freq. (MH_Z)
						Collector to Base (Volts)	Collector to Emitter (Volts)	Emitter to Base (Volts)			
					I_C	BV_{CBO}	BV_{CEO}	BV_{EBO}	h_{FE}	P_D	f_T
392	NPN–Si	Power Amp and High Speed Sw (Compl to NTE393)	TO218	55a	25	100	100	5	25 Min	125	3
393	PNP–Si	Power Amp and High Speed Sw (Compl to NTE392)	TO218	55a	25	100	100	5	25 Min	125	3
394	NPN–Si	Power Amp, High Voltage, Sw t_r = 0.2µs Typ	TO218	55a	3	500	400	5	30 Min	100	2.5
395	PNP–Si	Wide Band Linear Amp	TO72	31a	0.05	30	25	3	80	0.360* 0.225	2.3GH_z
396	NPN–Si	Power Amp & High Speed Sw (Compl to NTE397)	TO39	21a	1	450	350	7	40 Min	10* 1	15 Min
397	PNP–Si	Power Amp & High Speed Sw (Compl to NTE396)	TO39	21a	1	350	300	6	30 Min	10* 1	15 Min
398	PNP–Si	Vertical Deflection, Audio Amp (Compl to NTE375)	TO220	11a	2	200	150	5	100	25	5
399	NPN–Si	High Voltage Amp, Video	Giant TO92	3b	0.1	300	300	6	100 Min	0.9	50 Min
470	NPN–Si	RF Power Output (P_O = 100W, 2–30MH_Z)	W52	43	20	36	18	4	30	250	–
471	NPN–Si	RF Power Output (P_O = 100W, 2–30MH_z)	W52	43	15	65	36	4	50	250	–
472	NPN–Si	RF Power Driver, (P_O = 1.8W, 130–175MH_z)	TO39	21a	0.4	36	16	4	20 Min	5	–
473	NPN–Si	RF Power Driver, (P_O = 1.8W, 130–175MH_z)	TO39	21a	1	36	18	4	10 Min	7	–
474	NPN–Si	RF Pwr, Class C, FM Operation (P_O = 1.8W, 130–175MH_Z)	TO202EC	10e	0.60	36	18	4	5 Min	9.5	–
475	NPN–Si	RF Power Output (P_O = 7W, 130–175MH_z)	TO60	58a	1.5	36	18	4	10	11.5	–
476	NPN–Si	RF Power Output (P_O = 12W, 130–175MH_z)	TO60	58a	3	36	18	4	10	23	–
477	NPN–Si	RF Power Output (P_O = 45W, 130–175MH_z)	W65	52	4	36	18	4	20	75*	–
478	NPN–Si	RF Power Output (P_O = 100W, 130–175MH_z)	W65	52	15	36	18	4	10 Min	270	–
480	NPN–Si	RF PO for Broadband Range (P_O = 40W, 405–512MH_Z)	W65	52	8	36	16	4	20 Min	117	–
481	NPN–Si	RF PO for UHF Range (P_O = 6W, 806–866MH_Z)	–	63	5	36	16	4	20 Min	28	–
482	NPN–Si	RF PO for Mobile Range (P_O = 15W, 806–866MH_Z)	W189	170a	7	36	16	4	20 Min	46	–
483	NPN–Si	RF PO for Mobile Range (P_O = 18W, 806–866MH_Z)	–	63	7	36	16	4	20 Min	46	–
484	NPN–Si	RF PO for Mobile Applications (P_O = 25W, 806–947MH_Z)	–	63	10	36	16	4	20 Min	75	–
485	NPN–Si	RF PO for Mobile Range (P_O = 25W, 806–866MH_Z)	W189	170b	7.5	36	18	4	15 Min	70	–
486	NPN–Si	RF High Frequency Amp, (P_O = 75W, 407–512MH_z)	TO39	21a	0.15	35	20	4	20 Min	2.5	–
488	NPN–Si	RF Power Output for VHF Range (P_O = 4W, 175MH_Z)	TO39	21c	1	35	17	4	10 Min	10*	–

MP = Matched Pairs **Denotes Surface Mount Types
*T_C = 25°C

See Diagrams, beginning on Page 1–42

NTE Type Number	Polarity and Material	Description and Application	Case Style	Diag. No.	Maximum Collector Current (Amps)	Maximum Breakdown Voltage			Typical Forward Current Gain	Maximum Collector Power Dissipation (Watts)	Typical Freq. (MH_Z)
						Collector to Base (Volts)	Collector to Emitter (Volts)	Emitter to Base (Volts)			
					I_C	BV_{CBO}	BV_{CEO}	BV_{EBO}	h_{FE}	P_D	f_T
2300	NPN–Si	High Voltage Horiz Output $t_f = 0.5\mu s$	TO218	55a	8	1500	700	5	6	125	–
2301	NPN–Si	High Voltage Horiz Output $t_f = 0.4\mu s$	TO218	55a	5	1500	750	5	5	100	4
2302	NPN–Si	High Voltage Horiz Output w/Internal Damper Diode $t_f = 0.4\mu s$	TO3P	59a	5	1500	800	7	8 Min	120*	3
2303	NPN–Si	High Voltage Horiz Output $t_f = 0.4\mu s$	TO220	11a	2.5	1500	750	5	4.5	65	4
2304	NPN–Si	High Current, High Speed Sw $t_f = 0.1\mu s$ (Compl to NTE2314)	TO3P	59a	15	60	50	6	100 Min	90	20
2305	NPN–Si	High Voltage/Power Amp $t_f = 1.2\mu s$ (Compl to NTE2306)	TO218	55a	16	160	160	7	35	125	1 Min
2306	PNP–Si	High Voltage/Power Amp $t_f = 1.2\mu s$ (Compl to NTE2305)	TO218	55a	16	160	160	7	35	125	1 MIn
2307	NPN–Si	High Speed, Power Amp	TO3P	59a	5	200	180	5	500 Min	80	–
2308	NPN–Si	High Voltage/Current Switch $t_f = 1.0\mu s$	TO3P	59a	12	500	400	7	15 Min	100*	20
2309	NPN–Si	High Voltage/Speed Switch $t_f = 0.7\mu s$	TO3P	59a	6	900	800	7	10 Min	100*	15
2310	NPN–Si	Hgih Voltage/Speed Switch $t_f = 0.8\mu s$	TO218	55a	8	1000	450	–	10	125	–
2311	NPN–Si	High Voltage/Speed Switch $t_f = 0.13\mu s$	TO218	55a	15	1000	450	7	10	150	–
2312	NPN–Si	High Voltage/High Speed Switch $t_f = 0.7\mu s$	TO220	11a	8	700 (CEV)	400 (SUS)	9	60 Max	80	4 Min
2313	NPN–Si	High Speed Switch $t_f = 0.4\mu s$	TO220	11a	2	1000 (CES)	450	5	50	40	20
2314	PNP–Si	High Speed Switch $t_f = 0.1\mu s$ (Compl to NTE2304)	TO3P	59a	15	60	50	6	70 Min	90*	20
2315	NPN–Si	Fast Switching Pwr Darlington $t_f = 0.2\mu s$	TO220	11a	8	400	200	6	125	60	–
2316	NPN–Si	High Voltage Pwr Darlington	TO218	55a	10	500	450	5	130	120	–
2317	NPN–Si	High Voltage Fast Switch Pwr Darlington, $t_f = 0.5\mu s$	TO218	55a	15	500 (CES)	450	5	300 Min	150	–
2318	NPN–Si	High Voltage Switch w/Internal Damper Diode $t_f = 0.5\mu s$	TO218	55a	8	1500 (CES)	700	5	5	125	0.5
2319	NPN–Si	High Voltage, High Speed Power Switch, $t_f = 80ns$	TO3	1a	15	850 (CES)	450	6	5 Min	175	–
2320	PNP/NPN Si	Quad, Gen Purpose Switch/Amp, Complementary Pair	14–Lead DIP	247	0.5	60	30	5	100 Min	0.65/Unit 1.25 Total	350
2321	NPN–Si	Quad, Gen Purpose Amp	14–Lead DIP	247	0.5	60	40	5	100 Min	0.65/Unit 1.9 Total	350
2322	PNP–Si	Quad, Gen Purpose Amp	14–Lead DIP	247	0.6	60	40	5	100 Min	0.65/Unit 1.9 Total	350
2323	NPN–Si	Quad, High Voltage Gen Purpose Amp	14–Lead DIP	247	0.5	200	200	5	80	0.75/Unit 1.7 Total	80

MP = Matched Pairs **Denotes Surface Mount Types
*$T_C = 25°C$

See Diagrams, beginning on Page 1–42

NTE Type Number	Polarity and Material	Description and Application	Case Style	Diag. No.	Maximum Collector Current (Amps)	Maximum Breakdown Voltage			Typical Forward Current Gain	Maximum Collector Power Dissipation (Watts)	Typical Freq. (MH_Z)
						Collector to Base (Volts)	Collector to Emitter (Volts)	Emitter to Base (Volts)			
					I_C	BV_{CBO}	BV_{CEO}	BV_{EBO}	h_{FE}	P_D	f_T
2324	NPN–Si	High Speed Switch, t_f = 0.1µs	TO3PML	477	8	1500	800	6	8 Min	70*	–
2325	NPN–Si	High Voltage Switch t_f = 0.7µs	TO220	11a	3	900	800	7	8 Min	50	15
2327	NPN–Si	High Vltg, High Speed Switch t_f = 0.4µs Typ	TO126	7a	0.5	1000 (CES)	450	5	50	20	20
2328	NPN–Si	Audio Power Output (Compl to NTE2329)	–	556	15	200	200	5	55 Min	150	30
2329	PNP–Si	Audio Power Output (Compl to NTE2328)	–	556	15	200	200	5	55 Min	150	25
2330	NPN–Si	High Gain Amp w/Internal Zener Diode	TO3P	59a	4	55+15 –10	55+15 –10	5	1000	80	–
2331	NPN–Si	Color TV Horiz Deflection w/Damper Diode t_f = 0.1µs Typ	TO3PML	477	6	1500	800	6	8 Min	60	–
2332	NPN–Si	Darlington w/Internal Damper & Zener Diode t_f = 0.5µs	TO220	11a	2	60±10	60±10	6	4000	20	–
2334	NPN–Si	Darlington Driver w/Internal Damper and Zener Diode t_f = 1.5µs	TO220	11a	5	60±10	60±10	6	4000	40	20
2335	NPN–Si	Darlington w/Internal Zener Diode for Line Operated TV	TO3P	59a	5	60±15	60±15	6	2000 Min	80	–
2336	NPN–Si	Darlington Switch w/Internal Damper and Zener Diode t_f = 1µs	TO220 Isol Tab	11I	8	60±10	60±10	7	2000 Min	45	–
2337	NPN–Si	High Voltage, High Speed t_f = 0.3µs	TO220	11a	7	900	500	8	15 Min	2/45*	20
2338	NPN–Si	Darlington Pwr Amp w/Internal Damper and Zener Diode t_f = 2µs	TO126	7a	1.5	60±10	60±10	7	2000 Min	10	–
2340	NPN–Si	Darlington Sw w/Internal Damper and Zener Diode t_f = 1µs	"N" Pack	523	8	60±10	60±10	7	2000 Min	45	–
2343	NPN–Si	Darlington, Audio Amp, Driver (Compl to NTE2344)	TO220	11a	12	100	100	5	1000 Min	80*	–
2344	PNP–Si	Darlington, Audio Amp, Driver (Compl to NTE2343)	TO220	11a	12	100	100	5	1000 Min	80*	–
2349	NPN–Si	High Current Darlington (Compl to NTE2350)	TO3	1a	50	120	120	5	2000 Min	300	–
2350	PNP–Si	High Current Darlington (Compl to NTE2349)	TO3	1a	50	120	120	5	2000 Min	300	–
2351	NPN–Si	Darlington Pwr Amp, Sw t_f = 0.6µs (Compl to NTE2352)	"N" Pack	523	4	100	80	5	1000 Min	1	–
2352	PNP–Si	Darlington Pwr Amp, Sw t_f = 0.4µs (Compl to NTE2351)	"N" Pack	523	4	100	80	5	1000 Min	1	–
2355	NPN–Si	Digital w/2 Built–in Bias 10K Resistors (Compl to NTE2356)	TO92 Type	508	0.1	50	50	10	50 Min	0.3	250
2356	PNP–Si	Digital w/2 Built–in Bias 10K Resistors (Compl to NTE2355)	TO92 Type	508	0.1	50	50	10	50 Min	0.3	250

MP = Matched Pairs **Denotes Surface Mount Types
*T_C = 25°C

See Diagrams, beginning on Page 1–42

NTE Type Number	Polarity and Material	Description and Application	Case Style	Diag. No.	Maximum Collector Current (Amps)	Maximum Breakdown Voltage			Typical Forward Current Gain	Maximum Collector Power Dissipation (Watts)	Typical Freq. (MH_Z)
						Collector to Base (Volts)	Collector to Emitter (Volts)	Emitter to Base (Volts)			
					I_C	BV_{CBO}	BV_{CEO}	BV_{EBO}	h_{FE}	P_D	f_T
2357	NPN–Si	Digital w/2 Built–in Bias 22K Resistors (Compl to NTE2358)	TO92 Type	508	0.1	50	50	10	50 Min	0.3	250
2358	PNP–Si	Digital w/2 Built–in Bias 22K Resistors (Compl to NTE2357)	TO92 Type	508	0.1	50	50	10	50 Min	0.3	250
2359	NPN–Si	Digital w/2 Built–in Bias 47K Resistors (Compl to NTE2360)	TO92 Type	508	0.1	50	50	10	50 Min	0.3	250
2360	PNP–Si	Digital w/2 Built–in Bias 47K Reistors (Compl to NTE2359)	TO92 Type	508	0.1	50	50	10	50 Min	0.3	250
2361	NPN–Si	High Speed Switch t_f = 70ns (Compl to NTE2362)	TO92 Type	508	0.5	60	50	5	200 Min	0.3	300
2362	PNP–Si	High Speed Switch t_f = 50ns (Compl to NTE2361)	TO92 Type	508	0.5	60	50	5	200 Min	0.3	200
2401**	PNP–Si	RF Stages in FM Front Ends	SOT–23	547a	0.025	30	30	4	–	0.3	450
2402**	NPN–Si	Low Noise, UHF/VHF Amp (Compl to NTE2403)	SOT–23	547a	0.025	20	15	2	90	0.2	$5GH_z$
2403**	PNP–Si	Low Noise, UHF/VHF Amp (Compl to NTE2402)	SOT–23	547a	0.025	20	15	2	50	0.2	$5GH_z$
2404**	NPN–Si	Darlington (Compl to NTE2405)	SOT–23	547a	0.3	40	30	10	4000 Min	0.35	220
2405**	PNP–Ai	Darlington (Compl to NTE2404)	SOT–23	547a	0.3	40	30	10	4000 Min	0.35	220
2406**	NPN–Si	General Purpose Amp (Compl to NTE2407)	SOT–23	547a	0.6	75	40	6	100 Min	0.35	300 Min
2407**	PNP–Si	General Purpose Amp (Compl to NTE2406)	SOT–23	547a	0.6	60	60	5	100 Min	0.35	200 Min
2408**	NPN–Si	Low Noise, Driver, Output (Compl to NTE2409)	SOT–23	547a	0.1	80	65	6	125 Min	0.2	300
2409**	PNP–Si	Low Noise, Driver, Output (Compl to NTE2408)	SOT–23	547a	0.1	80	65	5	220 Min	0.2	150
2411**	PNP–Si	HV Amp/Driver	SOT–23	547a	0.5	160	150	5	60 Min	0.35	100 Min
2412**	NPN–Si	Gen Purp HV Amp (Compl to NTE2413)	SOT–23	547a	0.05	300	300 (CER)	5	50 Min	0.31	60 Min
2413**	PNP–Si	Gen Purp HV Amp (Compl to NTE2412)	SOT–23	547a	0.05	300	300 (CER)	5	50 Min	0.31	60 Min
2414**	NPN–Si	Digital w/2 Built–in Bias 10K Resistors (Compl to NTE2415)	SOT–23	547b	0.1	50	50	10	50 Min	0.2	250
2415**	PNP–Si	Digital w/2 Built–in Bias 10K Resistors (Compl to NTE2414)	SOT–23	547b	0.1	50	50	10	50 Min	0.2	250
2416**	NPN–Si	Digital w/2 Built–in Bias 22K Resistors (Compl to NTE2417)	SOT–23	547b	0.1	50	50	10	50 Min	0.2	250
2417**	PNP–Si	Digital w/2 Built–in Bias 22K Resistors (Compl to NTE2416)	SOT–23	547b	0.1	50	50	10	50 Min	0.2	250

MP = Matched Pairs
*T_C = 25°C

**Denotes Surface Mount Types

See Diagrams, beginning on Page 1–42

NTE Type Number	Polarity and Material	Description and Application	Case Style	Diag. No.	Maximum Collector Current (Amps)	Maximum Breakdown Voltage			Typical Forward Current Gain	Maximum Collector Power Dissipation (Watts)	Typical Freq. (MH_Z)
						Collector to Base (Volts)	Collector to Emitter (Volts)	Emitter to Base (Volts)			
					I_C	BV_{CBO}	BV_{CEO}	BV_{EBO}	h_{FE}	P_D	f_T
2418**	NPN–Si	Digital w/2 Built–in Bias 47K Resistors (Compl to NTE2419)	SOT–23	547b	0.1	50	50	10	50 Min	0.2	250
2419**	PNP–Si	Digital w/2 Built–in Bias 47K Resistors (Compl to NTE2418)	SOT–23	547b	0.1	50	50	10	50 Min	0.2	250
2426**	NPN–Si	Darlington Switch (Compl to NTE2427)	SOT–89	555	0.5	90	80 (CER)	5	2000 Min	1	–
2427**	PNP–Si	Darlington Switch (Compl to NTE2426)	SOT–89	555	0.5	90	80 (CER)	5	2000 Min	1	–
2428**	NPN–Si	General Purpose Amp, Switch (Compl to NTE2429)	SOT–89	555	1	90	80	5	100 Min	1	100 Min
2429**	PNP–Si	General Purpose Amp, Switch (Compl to NTE2428)	SOT–89	555	1	90	80	5	100 Min	1	100 Min
2430**	NPN–Si	HV Amp/Switch (Compl to NTE2431)	SOT–89	555	1	400	350	5	40 Min	1	70 Min
2431**	PNP–Si	HV Amp/Switch (Compl to NTE2430)	SOT–89	555	1	350	300	6	30 Min	1	15 Min
16001	NPN–Si	Video IF Amp	–	516a	0.5	45	35	4	50	0.6	500
16002	NPN–Si	RF Power, Dr (P_O = 13.5W, 175MH_z)	TO60	58b	3	65	40	4	5 Min	23*	400
16003	NPN–Si	RF Power, Dr (P_O = 7.5W, 100MH_z)	TO60	58b	1.5	65	40	4	10 Min	11.6*	500
16004	PNP–Si	High Current General Purpose (Compl to NTE16005)	TO39	21a	2	100	75	7	30 Min	10	–
16005	NPN–Si	High Current General Purpose (Compl to NTE16004)	TO39	21a	2	100	75	7	30 Min	10	–
16006	NPN–Si	Low Frequency Output Amp w/High Current Gain	–	516a	0.7	20	20	15	1000 Min	1	55
16007	NPN–Si	Medium Power Gen Purp	TO8	475	3	100	100 (CEV)	12	35 Min	25	1.25

MP = Matched Pairs **Denotes Surface Mount Types
*T_C = 25°C

See Diagrams, beginning on Page 1–42

SILICON DARLINGTON TRANSISTORS

(IN ORDER OF NTE PART NUMBER)

NTE Type Number		Case Style	Diag. Number	Maximum Continuous Collector Current (Amps)	Maximum Breakdown Voltage			Maximum Continuous Base Current (mA)	Typical Forward Current Gain	Maximum Collector Power Dissipation (Watts)	Circuit Outline Description Letter	
NPN	PNP				Collector to Base (Volts)	Collector to Emitter (Volts)	Emitter to Base (Volts)				NPN	PNP
				I_C	BV_{CBO}	BV_{CEO}	BV_{EBO}	I_B	h_{FE}	P_D		
46	–	TO92	9a	0.5	100	100	12	–	10000	0.625	C	–
48	–	Giant TO92	3a	1	60	50 (CES)	12	–	25000 Min	1	C	–
97	–	TO3	1a	10	500	400	8	2500	40 Min	150	G	–
98	–	TO3	1a	20	700	500	8	2500	40 Min	175	G	–
99	–	TO3	1a	50	600	400	8	10000	25 Min	250	G	–
172A	–	TO92	9c	0.3	40	40	12	50	7000 Min	0.4	C	–
214	–	TO3P	59a	10	70	60	6	–	5000	2.5	A	–
215	–	TO3P	59a	8	110	100	6	–	4000	60	A	–
243	**244**	TO3	1a	8	80	80	5	120	2500	100	A	B
245	**246**	TO3	1a	10	80	80	5	200	4000	150	A	B
247	**248**	TO3	1a	12	100	100	5	200	3000	150	A	B
249	**250**	TO3	1a	16	100	100	5	500	4000	150	A	B
251	**252**	TO3	1a	20	100	100	5	500	2500	160	A	B
253	**254**	TO126	7a	4	80	80	5	100	2500	40	A	B
256	–	TO218	55a	28	600	400	10	6A	30 Min	150	G	–
257	–	TO127	33	5	80	80	5	100	750 Min	70	A	–
259	–	TO127	33	8	100	100	5	120	4000	75	A	–
261	**262**	TO220	11a	8	100	100	5	120	1000 Min	65	A	B
263	**264**	TO220	11a	10	100	100	5	250	1000 Min	65	A	B
265	–	TO202	10a	0.5	50	50	13	–	10000 Min	6.25	C	–
266	–	TO202	10a	0.5	50	50	13	–	40000 Min	6.25	C	–
267	–	TO202	10a	0.5	30	30	13	–	90000 Min	6.25	C	–
268	**269**	TO202	10a	2	50	50	13	100	1000 Min	10	C	D
270	**271**	TO218	55a	10	100	100	5	500	1000 Min	125	E	F
272	**273**	TO202N	34	2	50	40	12	–	25000 Min	10	C	D
274	**275**	TO66	6a	4	80	80	5	80	3000	50	A	B
2315	–	TO220	11a	8	400	200	6	2A	125	60	K	–
2316	–	TO218	55a	10	500 (CES)	450	5	5A	130	120	L	–
2317	–	TO218	55a	15	500 (CES)	450	5	1A	300 Min	150	L	–
2332	–	TO220	11a	2	60±10	60±10	6	2	4000	20	I	–
2334	–	TO220	11a	5	60±10	60±10	6	500	4000	40	I	–
2335	–	TO3P	59a	5	60±15	60±15	6	–	2000 Min	80	O	–
2336	–	TO220 Isolated Tab	11l	8	60±10	60±10	7	–	2000 Min	45	J	–
2338	–	TO126	7a	1.5	60±10	60±10	7	–	2000 Min	10	I	–
2340	–	"N" Pack	523	8	60±10	60±10	7	–	2000 Min	45	J	–
2343	**2344**	TO220	11a	12	100	100	5	200	1000 Min	80	A	B
2349	**2350**	TO3	1a	50	120	120	5	2A	2000 Min	300	A	B
2351	**2352**	"N" Pack	523	4	100	80	5	0.4	1000 Min	1	A	B
2404	**2405**	SOT–23	547a	0.3	40	30	10	100	4000 Min	0.350	C	D
2426	**2427**	SOT–89	555	0.5	90	80 (CER)	5	100	2000 Min	1	M	N

See Diagrams, beginning on Page 1–42

SILICON DARLINGTON TRANSISTORS

Circuit A

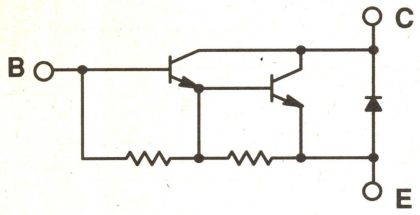

Circuit B

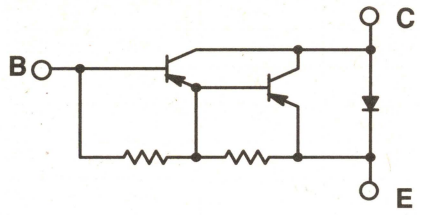

Circuit C

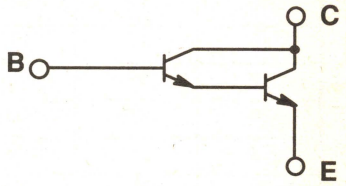

Circuit D

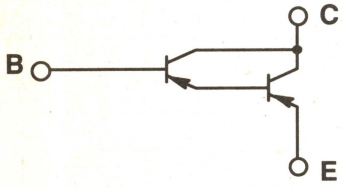

Circuit E

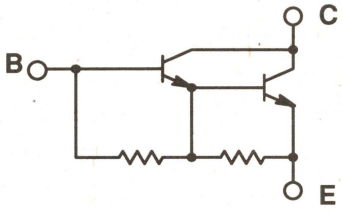

Circuit F

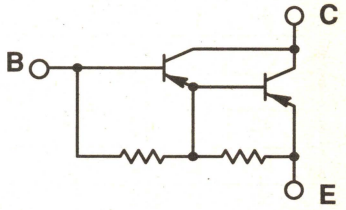

Circuit G

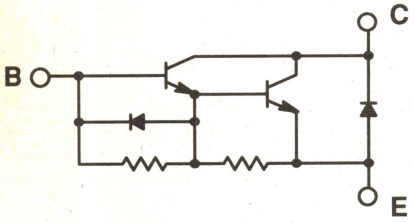

Circuit H

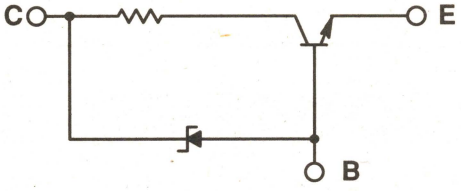

Circuit I

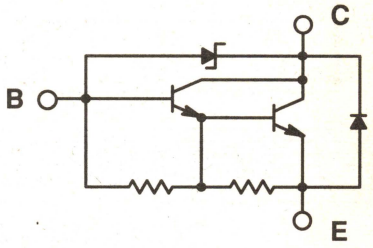

Circuit J

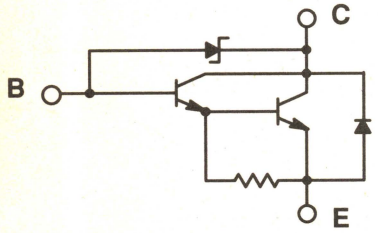

Circuit K

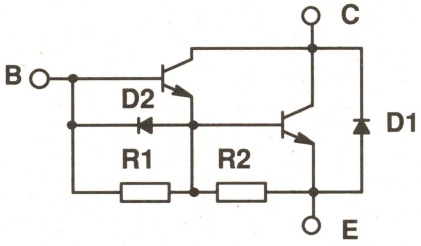

Circuit L

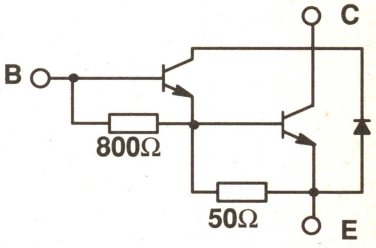

Circuit M

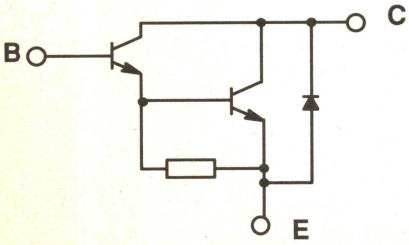

Circuit N

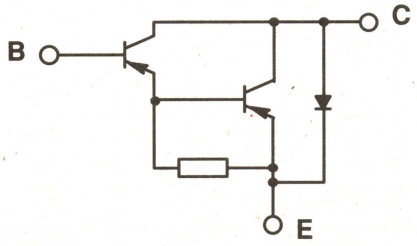

Circuit O

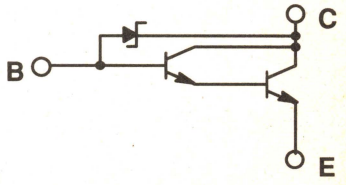

COMPLEMENTARY PAIRS

NTE Type Number	NTE Type Number	NTE Type Number	NTE Type Number	NTE Type Number	NTE Type Number	NTE Type Number	NTE Type Number	NTE Type Number	NTE Type Number
NPN	PNP	NPN	PNP	NPN	PNP	NPN	PNP	NPN	PNP
11	12	101	100	192	192	284	285	2328	2329
16	17	103	102	192A	193A	287	288	2343	2344
18	19	103A	102A	196	197	289	290	2349	2350
20	21	123A	159M	199	234	289A	290A	2351	2352
24	25	123AP	159	210	211	291	292	2355	2356
29	30	128	129	241	242	293	294	2357	2358
31	32	128P	129P	243	244	297	298	2359	2360
33	34	130	219	245	246	300	307	2361	2362
36	37	152	153	247	248	323	324	2402	2403
40	41	155	131	249	250	331	332	2404	2405
42	43	157	39	251	252	373	374	2406	2407
44	45	171	296	253	254	375	398	2408	2409
49	50	175	38	257	258	377	378	2412	2413
54	55	181	180	261	262	382	383	2414	2415
58	59	182	183	263	264	388	68	2416	2417
60	61	184	185	268	269	390	391	2418	2419
81	82	186	187	270	271	392	393	2426	2427
87	88	186A	187A	272	273	396	397	2428	2429
90	91	188	189	274	275	2304	2314	2430	2431
92	93	191	240	280	281	2305	2306	16005	16004

MATCHED COMPLEMENTARY PAIRS

(CONTAINS ONE EACH OF AN NPN & PNP TRANSISTOR)

(With current gain matched within 10%)

NTE Number	NPN	PNP
37MCP	36	37
55MCP	54	55
61MCP	60	61
68MCP	388	68
88MCP	87	88
93MCP	92	93
129MCP	128	129
153MCP	152	153
159MCP	123AP	159
180MCP	181	180
185MCP	184	185
219MCP	130	219
281MCP	280	281
285MCP	284	285
290AMCP	289A	290A
292MCP	291	292
332MCP	331	332

SILICON TRANSISTOR SELECTOR GUIDE

(LISTED IN ORDER OF PACKAGE AND BV_{CBO} RATING)

NTE Type Number		Application	Case Style	Diagram No.	Maximum Breakdown Voltage (Volts)		Maximum Collector Current (Amps)	Maximum Collector Dissipation (Watts)	Typical Forward Current Gain	Typical Frequency (MH_Z)
NPN	PNP				BV_{CBO}	BV_{CEO}	I_C	P_D	h_{FE}	f_T
20	21	AF PO, Dr, Series Pass	ATR	412	40	32	2	1	120 Min	100
16	17	Gen Purpose Small Signal Amp, Low Noise	ATR	412	50	40	0.1	0.3	270 Min	180/140
22	–	AF PO, Dr, Gen Purp Amp	ATR	412	100	80	1	0.9	120 Min	100
302	–	CB, Driver, Switch	B2	60b	100	50	1.5 Peak	7.9*	199 Min	70
306	–	CB, Driver, Switch	B2	60a	100	50	1.5 Peak	7.9*	199 Min	70
342	–	RF Pwr, 130–175MH_Z, 7W	B26	61	35	17	2	12.5	50	–
343	–	RF Pwr, 130–175 MH_Z, 14W	B26	61	35	17	3.5	25	50	–
15	–	VHF Amp, Mixer, Osc, UHF Osc	FTR	411	30	19	50	0.3	39 Min	1100
–	14	Low Freq, Driver	FTR	411	80	80	0.7	0.75	120 Min	100
315	–	Medium Pwr Audio Amp	R245	42	100	50	1	0.75	199 Min	–
382	383	Audio Freq Driver	R245	42	120	100	1	0.9	200	140
42	43	Dual, Differential Amp, High Gain Low Noise, Common Emitter	Sip–5	8a	50	50	0.1	0.2/Unit 0.4 Total	400 Min	100 Min
40	41	Dual, Differential Amp High Gain Low Noise, Common Emitter	Sip–5	8a	100	100	0.05	0.2/Unit 0.4 Total	400 Min	100 Min
44	45	Dual, High Gain, Low Noise, Bias Amp, Common Base	Sip–5	8b	100	100	0.1	0.2/Unit 0.4 Total	400 Min	100 Min
2402	2403	Low Noise, UHF/VHF Amp	SOT–23	547a	20	15	0.025	0.2	90/50	5GH_Z
–	2401	RF Stages in FM Front–Ends	SOT–23	547a	30	30	0.025	0.3	–	450
2404	2405	Darlington	SOT–23	547a	40	30	0.3	0.35	4000 Min	220
2414	2415	Digital w/2 Built–in Bias 10K Resistors	SOT–23	547b	50	50	0.1	0.2	50 Min	250
2416	2417	Digital w/2 Built–in Bias 22K Resistors	SOT–23	547b	50	50	0.1	0.2	50 Min	250
2418	2419	Digital w/2 Built–in Bias 47K Resistors	SOT–23	547b	50	50	0.1	0.2	50 Min	250
2406	2407	General Purpose Amp	SOT–23	547a	75/60	40/60	0.6	0.35	100 Min	300 Min/ 200 Min
2408	2409	Low Noise, Driver, Output	SOT–23	547a	80	65	0.1	0.2	125 Min/ 220 Min	300/150
–	2411	HV Amp/Dr	SOT–23	547a	160	150	0.5	0.35	60 Min	100 Min
2412	2413	General Purpose HV Amp	SOT–23	547a	300	300(CER)	0.05	0.31	50 Min	60 Min
2426	2427	Darlington Sw	SOT–89	555	90	80(CER)	0.5	1	2000 Min	–
2428	2429	General Purpose Amp,Sw	SOT–89	555	90	80	1	1	100 Min	100 Min
2430	2431	HV Amp/Sw	SOT–89	555	400/350	350/300	1	1	30 Min	15 Min
33	34	High Voltage Amp	TB–34	4	160	160	15	150	120 Min	80/60
29	30	High Current Switch	TO3	1a	80	80	50	300	25	2
243	244	Darlington Power Amp	TO3	1a	80	80	8	150	2500	–
247	248	Darlington Power Amp	TO3	1a	100	100	12	150	3000	–
249	250	Darlington Power Amp	TO3	1a	100	100	16	150	4000	–
251	252	Darlington Power Amp	TO3	1a	100	100	20	160	2500	–
130	219	Power Amp, Gen Purpose	TO3	1a	100	70(CER)	15	115	20 Min	2.5 Min
180	181	High Power Audio Amp	TO3	1a	100	100(CER)	30	200	25 Min	2 Min

*T_C=25°C

See Diagrams, beginning on Page 1–42

SILICON TRANSISTOR SELECTOR GUIDE

(LISTED IN ORDER OF PACKAGE AND BV_{CBO} RATING)

NTE Type Number		Application	Case Style	Diagram No.	Maximum Breakdown Voltage (Volts)		Maximum Collector Current (Amps)	Maximum Collector Dissipation (Watts)	Typical Forward Current Gain	Typical Frequency (MH_Z)
NPN	PNP				BV_{CBO}	BV_{CEO}	I_C	P_D	h_{FE}	f_T
2349	2350	High Current Darlington	TO3	1a	120	120	50	300	2000 Min	–
60	61	High Power Audio Amp	TO3	1a	140	140	20	250	150	2 Min
280	281	Audio Power Amp	TO3	1a	150	150	12	100	70	5/6
328	–	Power Amp, Switch	TO3	1a	150	130(CER)	15	140	12 Min	60 Min
284	285	Audio Amp Output	TO3	1a	180	180	16	150	70	6
327	–	Power Amp, Switch	TO3	1a	180	150	25	200	30 Min	40 Min
387	–	Power Amp, Switch	TO3	1a	180	150	50	250	80	30 Min
87	88	High Power AF, Switch	TO3	1a	250	250(CEX)	10	200	20 Min	–
94	–	High Voltage Switch	TO3	1a	300	300	5	100	40	2.5 Min
388	68	Power Amp, Gen Purpose	TO3	1a	400	250	16	250	30/35	4 Min
162	–	TV Vert Deflection	TO3	1a	500	300	10 Peak	100	20 Min	–
97	–	HV Darlington Pwr Amp, Fast Sw	TO3	1a	500	400	10	150	40 Min	–
385	–	Audio Power Amp, Switch	TO3	1a	550	350	10	150	17	–
99	–	HV Darlington Pwr Amp, Fast Sw	TO3	1a	600	400	50	250	25 Min	–
163A	–	TV Horiz Deflection	TO3	1a	700	700(CEV)	6	100	10 Min	–
52	–	High Vltg, High Speed Sw	TO3	1a	750	450	5	125	17	–
386	–	Audio Power Amp, Switch	TO3	1a	800	500	20	175	20	–
283	–	Horiz Output,, Switch	TO3	1a	800	325	10	100	10 Min	6
53	–	High Vltg, High Speed, Sw	TO3	1a	850	400	15	175	25	6 Min
2319	–	High Vltg, High Speed, Sw	TO3	1a	850(CES)	450	15 Cont	175	5 Min	–
89	–	Horiz Output w/Internal Damper Diode	TO3	1a	1500	600	7	50	8 Min	–
164	–	TV Vertical Output	TO3	1a	1500	700(CER)	1	50	30 Min	3
389	–	Horizontal Output	TO3	1a	1500	1500 (CES)	6	100	5 Min	4 Min
165	–	TV Horizontal Output	TO3	1a	1500	1400 (CES)	6	50	8 Min	3
238	–	TV Horizontal Output	TO3	1a	1500	1500 (CEX)	8	100	8	–
62	–	Very High Vltg Horiz Output	TO3	1a	2500	900	3	50	7	–
2330	–	High Gain Amp, w/ Internal Zener Diode	TO3P	59a	55+15 –10	55+15 –10	4	80	1000	–
2335	–	Darlington w/Internal Zener Diode for Line Operated TV	TO3P	59a	60±15	60±15	5	80	2000 Min	–
2304	2314	High Current, Speed Switch	TO3P	59a	60	50	15	90	100 Min/ 70 Min	20
214	–	Darlington Driver	TO3P	59a	70	60	10	60*	5000	20
215	–	Darlington Driver	TO3P	59a	110	100	8	60*	4000	20
36	37	Audio Power Amp	TO3P	59a/ 59alt	160	140	12	100	100	15
2307	–	High Gain, Power Amp	TO3P	59a	200	180	5	80	500 Min	–
2308	–	High Voltage/Current Switch	TO3P	59a	500	400	12	100*	15 Min	20
2309	–	High Voltage/Speed Switch	TO3P	59a	900	800	6	100*	10 Min	15
2302	–	High Voltage Output w/Internal Damper Diode	TO3P	59a	1500	800	5	120*	8 Min	3

*T_C=25°C

See Diagrams, beginning on Page 1–42

SILICON TRANSISTOR SELECTOR GUIDE

(LISTED IN ORDER OF PACKAGE AND BV_{CBO} RATING)

NTE Type Number		Application	Case Style	Diagram No.	Maximum Breakdown Voltage (Volts)		Maximum Collector Current (Amps)	Maximum Collector Dissipation (Watts)	Typical Forward Current Gain	Typical Frequency (MH_Z)
NPN	PNP				BV_{CBO}	BV_{CEO}	I_C	P_D	h_{FE}	f_T
2324	–	High Voltage Switch	TO3PML	477	1500	800	8	70*	8 Min	–
2331	–	TV Horiz Deflection w/ Damper Diode	TO3PML	477	1500	800	6	60	8 Min	–
16007	–	Med Power Gen Purp	TO8	475	100	100 (CEV)	3	25	35 Min	1.25
–	106	Amp, Osc, FM Mixer	TO18	28a	35	15	0.05	0.35	50 Min	650 Min
123A	159M	General Purpose Amp	TO18	28a	75/60	40/60	0.8/0.6	0.4	200/ 100 Min	300/ 200 Min
278	–	RF Amp, Broad Band	TO39	21a	40	20	0.4	3.5	40 Min	1400
346	–	RF Driver, Predriver	TO39	21a	40	20	0.4	1	10 Min	500 Min
77	–	Broad Band, CATV	TO39	21a	50	30	0.4	3.5	30 Min	1500
311	–	Driver, VHF/UHF Osc	TO39	21a	55	30	0.4	5	25 Min	800 Min
329	–	RF Power Amp	TO39	21a	–	30	1.5 Peak	5	–	–
195A	–	RF Pwr Amp, Driver	TO39	21a	70	70 (CER)	1.5	8	30 Min	150
123	–	Amp, Gen Purpose	TO39	21a	75	40	0.8	0.8	200	300 Min
16005	16004	High Current Gen Purpose	TO39	21a	100	75	2	10	30 Min	–
128	129	Amp, Gen Purpose	TO39	21a	120/90	80	1	1	90 Min	100/ 150 Min
324	323	Amp, Gen Purpose	TO39	21a	120	100	1.5	0.8	90/80	20 Min
154	–	High Vltg Video Output	TO39	21a	300	300	0.2	1	100	80
396	397	Pwr Amp, High Vltg	TO39	21a	450/350	350/300	1	10	40Min/ 30 Min	15 Min
224	–	Final RF Pwr Output	TO39 w/Flange	37	60	60 (CEV)	2	10	60	200
225	–	High Speed Sw Linear Amp	TO39 w/Flange	37	450	350	1	10	40 Min	15
237	–	Final RF Pwr Out	TO39HS	39	80	40	3 Pulse	10	50	250
74	–	Amp, Gen Purpose, Switch	TO59	18c	100	100	7	60	60 Min	30
96	–	Switching Power Transistor	TO59 Isol Stud	18b	100	100	7	60	60 Min	30 Min
95	–	High Vltg, Switch Isolated Stud	TO59/ TO111	18b/ 18a	250	250	3	40	90 Min	40
16002	–	RF Power, Dr	TO60	58b	65	40	3	23*	5 Min	400
16003	–	RF Power, Dr	TO60	58b	65	40	1.5	11.6*	10 Min	500
72	–	High Current, Fast Switch	TO61 Isol	16	120	100	10	115	30 Min	30
73	–	High Vltg Switch	TO61	17	220	200	10	85	15 Min	40
71	–	High Current, Fast Switch	TO63	15	150	90	20	200	20 Min	20
70	–	Pwr Amp, High Vltg, Switch	TO63	15	180	150	50	250	30 Min	–
274	275	Darlington Pwr Amp Switch	TO66	6a	80	80	4	50	3000	–
–	218	Audio Power Output	TO66	6a	90	80	4	25	30 Min	4 Min
124	–	High Vltg, Gen Purpose	TO66	6a	300	300	0.15	20	100	10
384	–	High Vltg Pwr Amp/Switch	TO66	6a	375	350	7	45	28	1 Min
175	38	Pwr Amp, Gen Purpose	TO66	6a	500/ 400	300(CER)/ 350	3/2	40/35	60/50	15/20
369	–	Vert Deflection, Switch	TO66	6a	800	400	3 Peak	40	30 Min	7
319	–	VHF Amp with AGC	TO72	31b	20	20	0.05	0.26*	80	300 Min
–	395	Wide Band Amp	TO72	31a	30	25	0.05	0.36*	80	2.3GH_Z

*T_C=25°C

See Diagrams, beginning on Page 1–42

SILICON TRANSISTOR SELECTOR GUIDE

(LISTED IN ORDER OF PACKAGE AND BV_{CBO} RATING)

NTE Type Number		Application	Case Style	Diagram No.	Maximum Breakdown Voltage (Volts)		Maximum Collector Current (Amps)	Maximum Collector Dissipation (Watts)	Typical Forward Current Gain	Typical Frequency (MH_Z)
NPN	PNP				BV_{CBO}	BV_{CEO}	I_C	P_D	h_{FE}	f_T
316	–	High Gain, Lo Noise UHF Amp	TO72	31a	30	15	0.05	0.2	25 Min	1400
161	–	VHF–UHF Amp, Mixer/Osc	TO72	31a	45	45(CES)	0.05	0.2	60	800
81	82	Amp, Dual VHF, Switch	TO78	23	75/60	40/60	0.5/0.6	0.6/Each 2 Total	100	250/ 320
10	–	UHF Low Noise Amp	TO92	9b	25	12	0.07	0.4	40 Min	4.5GH_Z
23	–	Ultra High Freq Amp	TO92	9b	30	14	0.05	0.25	80	2GH_z
107	–	UHF Osc	TO92	9c	30	15	0.05	0.2	75	1000
108	–	RF–IF Amp	TO92	9a	30	15	0.05	0.625	20 Min	800
233	–	Video IF Osc	TO92	9a	30	30	0.1	0.625	45	300 Min
–	232	Gen Purp Darlington Amp	TO92	9a	30	30	0.3	0.625	50000 Min	175
69	–	UHF/VHF Amplifier	TO92	9b	35	25	0.05	1*	60	1100
289	290	Audio Amp, Switch	TO92	9c	35	30	0.8	0.6	120 Min	100/120
11	12	High Current Am	TO92	9c	40/27	20/18	5	0.75	230 Min/ 180 Min	150/120
319P	–	VHF Amp w/AGC Control	TO92	9b	40	30	0.05	0.5	80	300 Min
172A	–	Darlington Pre–Amp	TO92	9c	40	40	0.3	0.4	7000 Min	60 Min
229	–	VHF Osc, Mixer	TO92	9b	40	40	0.05	0.425	30 Min	500 Min
47	–	High Gain, Low Noise Amp	TO92	9a	45	45	0.2	0.625	1150	160
199	234	Amp, Gen Purpose	TO92	9c	70/60	50	0.1/0.05	0.36/0.2	400 Min	90 Min/ 80 Min
85	–	Amp, Gen Purp Switch	TO92	9c	70	70 (CES)	0.4	0.625	120 Min	200 Min
123AP	159	Amp, Gen Purpose	TO92	9a	75/80	40/80	0.6/1	0.625	200/180	300 Min/ 200
46	–	Darlington, Gen Purp Amp, Preamp, Driver	TO92	9a	100	100	0.5	0.625	10000 Min	200
289A	290A	Audio Power Amp	TO92	9c	100	80	0.5	0.6	100 Min	120
194	–	Audio Pwr Amp	TO92	9a	180	160	0.6	0.31	100	100 Min
287	288	High Vltg, Gen Purp Amp	TO92	9a	300	300	0.5	0.625	40 Min	50 Min
192	193	Audio Pwr Amp, Gen Purp	TO92HS	35a	70	70 (CES)	1	1*	150	120 Min
192A	193A	Audio Pwr Output	TO92HS	35b	70	70 (CES)	0.5	0.6	120 Min	120
48	–	Darlington, High Current, Gen Purp Amp	Giant TO92	3a	60	50 (CES)	1	2.5*	25000 MIn	100 Min
293	294	Audio Amp & Driver	Giant TO92	3b	60	50	1	1	120 Min	200
297	298	Audio Amp Driver	Giant TO92	3b	80	80	0.5	0.75	130 Min	120
90	91	Amp, High Vltg, High Gain	Giant TO92	3b	120	120	0.05	0.75/ 150	400 Min	350/20
31	32	Sound/Vert Output	Giant TO92	3b	160	160	1	0.9	100 Min	20 Min/ 15 Min
399	–	High Vltg Video Amp	Giant TO92	3b	300	300	0.1	0.9	100 Min	50 Min
108–1	–	Amp, RF/IF Video	TO106	29a	30	15	0.05	0.625	20 Min	800
75	–	High Pwr Amp, Switch	TO111	19	100	80	5	50	40 Min	50 Min
76	–	Amp, Broad Band, CATV	TO117	20	50	30	0.4	5	30 Min	1500

*T_C=25°C

See Diagrams, beginning on Page 1–42

SILICON TRANSISTOR SELECTOR GUIDE

(LISTED IN ORDER OF PACKAGE AND BV_{CBO} RATING)

NTE Type Number		Application	Case Style	Diagram No.	Maximum Breakdown Voltage (Volts)		Maximum Collector Current (Amps)	Maximum Collector Dissipation (Watts)	Typical Forward Current Gain	Typical Frequency (MH_Z)
NPN	PNP				BV_{CBO}	BV_{CEO}	I_C	P_D	h_{FE}	f_T
2338	–	Darlington Power Amp w/Internal Damper	TO126	7a	60±10	60±10	1.5	10	2000 Min	–
184	185	Amp, High Speed Switch	TO126	7a	80	80	4	40	25 Min	2 Min
253	254	Darlington Pwr Amp	TO126	7a	80	80	4	40	2,500	–
373	374	Audio Amp, Gen Purpose	TO126	7a	180	160	1.5	20	190	140
157	39	High Vltg Amp, Gen Purp	TO126	7a	325/300	300	0.5	20	90/92	10 Min
2327	–	High Vltg, High Speed Sw	TO126	7a	1000 (CES)	450	0.5	20	50	20
182	183	High Speed Amp, Switch	TO127	33a	70	60	10	90	20 Min	2
257	–	Darlington Pwr Amp	TO127	33a	80	80	5	70	750 Min	–
259	–	Darlington Pwr Amp	TO127	33a	100	100	8	75	4000	–
267	–	Darlington Pwr Amp Switch	TO202	10a	30	30	0.5	6.25	90000 Min	–
265	–	Darlington Pwr Amp Sw	TO202	10a	50	50	0.5	6.25	10000 Min	–
266	–	Darlington Pwr Amp Switch	TO202	10a	50	50	0.5	6.25	40000 Min	–
268	269	Darlington Pwr Amp	TO202	10a	50	50	2	10	1000 Min	–
300	307	Audio Pwr Amp	TO202	10c	50	40	1.5	7	90 Min	65
186	187	Audio Driver, Output	TO202	10b	70	60	3	12.5	100 Min	50
299	–	RF Pwr Amp Driver	TO202	10c	75	35	1	4	70 Min	–
210	211	Gen Purp Output Driver	TO202	10a	90	75	1	6.25*	120 Min	200/ 150 Min
49	50	High Vltg Amp, Driver	TO202	10a	120	100	2	10	140	100
171	296	Audio, Video Amp	TO202	10a	300	300	0.1/ 0.5	6.25/ 10*	30 Min/ 80	75/ 45 Min
78	–	RF Pwr Output	TO202M/ TO220	22a/ 11a	36	18	0.6	5	5 Min	–
79	–	RF Pwr Output	TO202M	22a	36	18	2	15	5 Min	–
186A	187A	Med Audio Amp	TO202M	22a	40/50	50/40	3	10	120	150
272	273	Darlington Pwr Amp, Switch	TO202N	34	50	40	2	10*	25000 Min	–
322	–	RF Pwr Output	TO202N	34	65	65 (CES)	0.5	10	10 Min	100
188	189	High Vltg Amp	TO202N	34	80	80	2	10	60 Min	100
190	–	High Vltg Amp	TO202N	34	180	180	1	10	40 Min	100
191	240	High Vltg Amp	TO202N	34	300	300	0.5	10	40 Min/ 70	45 Min/ 60 Min
270	271	Darlington Pwr Amp Switch	TO218	55a	100	100	10	125	1000 Min	–
390	391	Pwr Amp, Switch	TO218	55a	100	100	10	80	40 Min	3
392	393	Pwr Amp Switch	TO218	55a	100	100	25	125	25 Min	3
2305	2306	High Pwr Audio Amp	TO218	55a	160	160	16	125	35	1 Min
2316	–	HV Pwr Darlington	TO218	55a	500	450	10	120	130	–
394	–	Pwr Amp, High Speed Sw	TO218	55a	500	400	3	100	30 Min	2.5
2317	–	High Vltg. Fast Switch, Pwr Darlington	TO218	55a	500 (CES)	450	15	150	300 Min	–
256	–	Darlington w/Damper Diode	TO218	55a	600	400	28	150	30 Min	–
2310	–	High Vltg	TO218	55a	1000	450	8	125	10	–

*T_C=25°C

See Diagrams, beginning on Page 1–42

SILICON TRANSISTOR SELECTOR GUIDE

(LISTED IN ORDER OF PACKAGE AND BV_{CBO} RATING)

NTE Type Number		Application	Case Style	Diagram No.	Maximum Breakdown Voltage (Volts)		Maximum Collector Current (Amps)	Maximum Collector Dissipation (Watts)	Typical Forward Current Gain	Typical Frequency (MH_Z)
NPN	PNP				BV_{CBO}	BV_{CEO}	I_C	P_D	h_{FE}	f_T
2311	–	High Vltg/Speed Sw	TO218	55a	1000	450	15	150	10	–
2300	–	High Vltg, Horiz Output	TO218	55a	1500	700	8	125	6	–
2301	–	High Vltg Horiz Output	TO218	55a	1500	750	5	100	5	4
2318	–	HV Sw w/Internal Damper Diode	TO218	55a	1500 (CES)	700	8	125	5	0.5
152	153	Amp, Gen Purpose	TO220	11a	60	60	5	50	60	10
2332	–	Darlington w/Internal Damper & Zener Diode	TO220	11a	60±10	60±10	2	20	4000	–
2334	–	Darlington Driver w/ Internal Damper & Zener Diode	TO220	11a	60±10	60±10	5	40	4000	20
2336	–	Darlington Switch w/Internal Damper & Zener Diode	TO220 Isol Tab	11l	60±10	60±10	8	45	2000 Min	–
235	–	Final RF Pwr Amp	TO220	11a	65	65 (CER)	3 Pulse	12	80	300
236	–	Final RF Pwr Amp	TO220	11a	70	70 (CER)	8 Pulse	25	20 Min	150
241	242	Amp, Gen Purpose	TO220	11a	80	80	4	60	25 Min	2.5 Min
377	378	Pwr Amp, Pwr Driver, Switch	TO220	11a	80	80	10	50	60 Min	50
196	197	Amp, Gen Purpose	TO220	11a	90	80 (CER)	7	50*	20 Min	4
56	–	High Gain Switch	TO220	11a	100	80	3	30	500 Min	15
261	262	Darlington Pwr Amp	TO220	11a	100	100	8	65	1000 Min	–
263	264	Darlington Pwr Amp	TO220	11a	100	100	10	65	1000 Min	–
331	332	Audio Amp, Switch	TO220	11a	100	100	15	90	40 Min	3 Min
2343	2344	Darlington Audio Amp, Dr	TO220	11a	100	100	12	80*	1000 Min	–
291	292	Amp, Gen Purpose	TO220	11a	130	120	4	40	70	4 Min/ 5 Min
54	55	High Freq Audio Driver	TO220	11a	150	150	8	50	100/120	30 Min
375	398	Vert Deflection Amp	TO220	11a	200	150	3/2	25	150/100	8/5
376	–	TV Pwr Supply Driver	TO220	11a	300	300	0.2	15*	100	70
2315	–	Fast Switch Pwr Darlington	TO220	11a	400	200	8	60	125	–
198	–	High Vltg Audio Output	TO220	11a	500	500 (CES)	1	40*	80	10 Min
51	–	High Vltg, High Speed Sw	TO220	11a	700	400	4	75	30	4 Min
379	–	High Vltg Switch	TO220	11a	700	400	12	100	12	4 Min
2312	–	HV High Speed Switch	TO220	11a	700 (CEV)	400 (SUS)	8	80	60 Max	4 Min
2337	–	High Vltg, High Speed Sw	TO220	11a	900	500	7	2/45*	15 Min	20
2325	–	High Voltage Switch	TO220	11a	900	800	3	50	8 Min	15
2313	–	High Speed Switch	TO220	11a	1000 (CES)	450	2	40	50	20
2303	–	High Vltg Horiz Output	TO220	11a	1500	750	2.5	65	4.5	4
–	217	High Speed Switch	TO237	413a	40	40	1	1.2	40 Min	175 Min
128P	129P	General Purpose Amp	TO237	413a	100	80	1	1/2	100 Min	150/125
24	25	Gen Purp Amp, Switch	TO237	413b	100	80	1	2*	50 Min/ 40 Min	150/125
227	–	HV Amp Video Output	TO237	413a	300	300	0.01	2*	40 Min	50 Min
2340	–	Darlington Sw w/Internal Damper Diode	"N" Pack	523	60±10	60±10	8	45	2000 Min	–
2351	2352	Darlington Pwr Amp, Sw	"N" Pack	523	100	80	4	1	1000 Min	–

*T_C=25°C

See Diagrams, beginning on Page 1–42

SILICON TRANSISTOR SELECTOR GUIDE

(LISTED IN ORDER OF PACKAGE AND BV_{CBO} RATING)

NTE Type Number		Application	Case Style	Diagram No.	Maximum Breakdown Voltage (Volts)		Maximum Collector Current (Amps)	Maximum Collector Dissipation (Watts)	Typical Forward Current Gain	Typical Frequency (MH_Z)
NPN	PNP				BV_{CBO}	BV_{CEO}	I_C	P_D	h_{FE}	f_T
2320	2320	Quad Gen Purp Sw Amp	14–Lead Dip	247	60	30	0.5	0.65/Unit 1.25 Total	100 Min	350
2321	–	Quad Gen Purpose	14–Lead Dip	247	60	40	0.5	0.65/Unit 1.9 Total	100 Min	350
–	2322	Quad Gen Purpose	14–Lead Dip	247	60	40	0.6	0.65/Unit 1.9 Total	100 Min	350
2323	–	Quad High Vltg Gen Purpose Amp	14–Lead Dip	247	200	200	0.5	0.75/Unit 1.7 Total	80	80
58	59	High Pwr Audio Output	–	13	200	200	17	200	30 Min	20
92	93	Hi–Fi Pwr Amp, Audio Output	–	13	200	200	15	150	120	20
63	–	High Gain, Low Noise, Wide Band, Small Signal Amp	–	14	20	12	0.04	0.4	40	$5GH_Z$
64	–	UHF/Microwave Amp/ Hi Speed Sw	–	14	25	15	0.03	0.375	80	$4.5GH_Z$
313	–	VHF Mixer & UHF/RF Amp, High Gain Low Noise	–	41	30	30	0.02	0.15	60	530
344	–	RF Power Output	–	50	35	17	7	50	50	–
26	–	Low Noise Audio Amp	–	508	120	120	0.1	0.2	350 Min	100
2355	2356	Digital w/2 Built–in Bias 10K Resistors	–	508	50	50	0.1	0.3	50 Min	250
2357	2358	Digital w/2 Built–in Bias 22K Resistors	–	508	50	50	0.1	0.3	50 Min	250
2359	2360	Digital w/2 Built–in Bias 47K Resistors	–	508	50	50	0.1	0.3	50 Min	250
2361	2362	High Speed Switch	–	508	60	50	0.5	0.3	200 Min	300/200
13	–	Low Vlt Output Amp	–	516a	25	20	0.5	0.6	400 Min	200
16006	–	AF Amp	–	516a	20	20	0.7	1	1000 Min	–
16001	–	Video IF Amp	–	516a	45	35	0.05	0.6	50	500
2328	2329	Audio Pwr Output	–	556	200	200	15	150	55 Min	30/25

*T_C=25°C

See Diagrams, beginning on Page 1–42

HIGH BAND VHF FM 136 – 174 MHz

NTE Type Number	Description & Application	Case Style	Diagram Number	Output Power Watts P_{OUT}	Input Power Watts P_{IN}	Supply Voltage V_{CC}	Test Frequency MHz
346	NPN–Si, Predriver, Driver	TO39	21a	1	0.1	12	175
472	NPN–Si, Driver/PO	TO39	21a	1.75	0.125	12.5	175
473	NPN–Si, Driver/PO	TO39	21a	2.2	0.5	15	175
347	NPN–Si, Driver/PO	T71	51	3	0.35	13.6	175
474	NPN–Si, Driver/PO	TO202	10e	3	0.3	12.5	175
341	NPN–Si, Driver/PO	TO39	21b	4	0.25	12.5	175
488	NPN–Si, Driver/PO	TO39EC	21c	4	0.3	13.5	175
348	NPN–Si, Driver/PO	T72H	46	4	0.15	12.5	175
475	NPN–Si, Driver/PO	TO60	58a	7	1.75	13.6	175
349	NPN–Si, Driver/PO	T72H	46	10	1.5	13.6	175
476	NPN–Si, Driver/PO	TO60	58a	12	3.4	13.6	175
350	NPN–Si, Driver/PO	T72H	46	15	2.5	12.5	175
350F	NPN–Si, Driver/PO	W52K	47	15	2.5	12.5	175
351	NPN–Si, Driver/PO	T72H	46	25	5	12.5	175
345	NPN–Si, Driver/PO	T72H	46	30	3	13.6	160
320	NPN–Si, PO	–	45	40	12	12.5	175
320F	NPN–Si, PO	W52K	47	40	12	12.5	175
477	NPN–Si, PO	W65	52	45	6	12.5	175
352	NPN–Si, PO	W65	52	80	12	12.5	175
478	NPN–Si, PO	W65	52	100	20	12.5	175
353	PNP–Si, PO	W52K	47	4	0.25	12.5	175
354	PNP–Si, PO	W52K	47	4	0.25	12.5	175
355	PNP–Si, PO	W52K	47	30	8	12.5	175
356	PNP–Si, PO	W52K	47	40	14	12.5	175
16002	NPN–Si, Driver/PO	TO60	58b	13.5	3.5	28	175
16003	NPN–Si, Driver/PO	TO60	58b	7.5	10	28	100

AMATEUR 13 – 30 MHz

NTE Type Number	Description & Application	Case Style	Diagram Number	Output Power Watts P_{OUT}	Input Power Watts P_{IN}	Supply Voltage V_{CC}	Test Frequency MHz
318	NPN–Si, PO	W52	43	50	1.6	12.5	30
325	NPN–Si, PO	T72H	43	50	1.5	13.6	30
333	NPN–Si, PO	W52K	47	60	2	12.5	30
334	NPN–Si, PO	T72H	46	60	2	12.5	30
317	NPN–Si, PO	W52	43	70	3	12.5	30
335	NPN–Si, PO	W52	43	80	3.5	12.5	30
336	NPN–Si, PO	T75W	48	80	3.5	12.5	30
470	NPN–Si, PO	W52	43	100	8	12.5	30
471	NPN–Si, PO	W52	43	100	3.2	28	30

See Diagrams, beginning on Page 1–42

LOW BAND FM 27 – 50 MHz

NTE Type Number	Description & Application	Case Style	Diagram Number	Output Power Watts	Input Power Watts	Supply Voltage	Test Frequency MHz
				P_{OUT}	P_{IN}	V_{CC}	
337	NPN–Si, Driver	T72H	46	8	0.8	12.5	50
338	NPN–Si, Driver/PO	T72H	46	20	1.5	12.5	50
338F	NPN–Si, Driver/PO	W52K	47	20	3.2	12.5	30
339	NPN–Si, PO	T72H	46	40	2	12.5	50

VHF AM 108 – 175 MHz

NTE Type Number	Description & Application	Case Style	Diagram Number	Output Power Watts	Input Power Watts	Supply Voltage	Test Frequency MHz
				P_{OUT}	P_{IN}	V_{CC}	
311	NPN–Si, Predriver, Driver, PO	TO39	21a	1	0.02	28	175
357	NPN–Si, Driver/PO	T71	51	7	1	28	175
359	NPN–Si, Driver/PO	T72H	46	20	3	28	175
360	NPN–Si, Driver/PO	T72H	46	40	7	28	175

VHF MARINE FM 156 – 162 MHz

NTE Type Number	Description & Application	Case Style	Diagram Number	Output Power Watts	Input Power Watts	Supply Voltage	Test Frequency MHz
				P_{OUT}	P_{IN}	V_{CC}	
340	NPN–Si, Driver/PO	Giant TO92	3b	0.6	0.05	13.5	175
341	NPN–Si, Driver/PO	TO39EC	21b	4	0.16	12.5	175
488	NPN–Si, Driver/PO	TO39EC	21c	4	0.3	13.5	175
342	NPN–Si, PO	B26	61	7	0.6	13.5	175
343	NPN–Si, PO	B26	61	14	2.5	13.5	175
344	NPN–Si, PO	–	50	30	6	13.5	175
345	NPN–Si, PO	T72H	46	30	3	13.6	160

See Diagrams, beginning on Page 1–42

UHF FM 407 – 512 MHz

NTE Type Number	Description & Application	Case Style	Diagram Number	Output Power Watts	Input Power Watts	Supply Voltage	Test Frequency MHz
				P_{OUT}	P_{IN}	V_{CC}	
486	NPN–Si, Multi, Driver	TO39	21a	0.75	0.125	12.5	470
361	NPN–Si, Driver/PO	TO39EC	21b	2	0.275	12.5	470
362	NPN–Si, Driver/PO	–	53	2	0.150	12.5	470
363	NPN–Si, Driver/PO	–	53	4	0.425	12.5	470
364	NPN–Si, Driver/PO	–	53	10	2	12.5	470
365	NPN–Si, Driver/PO	W65	52	15	2	12.5	470
366	NPN–Si, Driver/PO	W65	52	25	5.5	12.5	470
480	NPN–Si, PO	W65	52	40	9	12.5	470
367	NPN–Si, PO	W65	52	45	12	12.5	470
368	NPN–Si, PO	W65	52	60	20	12.5	470

UHF FM 806 – 870 MHz

NTE Type Number	Description & Application	Case Style	Diagram Number	Output Power Watts	Input Power Watts	Supply Voltage	Test Frequency MHz
				P_{OUT}	P_{IN}	V_{CC}	
481	NPN–Si, PO	–	63	6	0.6	12.5	836
482	NPN–Si, PO	–	170a	15	3.2	12.5	836
483	NPN–Si, PO	–	63	18	2.3	12.5	836
484	NPN–Si, PO	–	63	25	6.5	12.5	836
485	NPN–Si, PO	–	170b	25	6.5	12.5	836

See Diagrams, beginning on Page 1–42

GERMANIUM TRANSISTORS SELECTOR GUIDE

(IN ORDER OF CASE STYLE)

NTE Type Number		Application	Case Style	Diag. Number	Maximum Breakdown Voltage		Maximum Collector Current Amps	Maximum Collector Dissipation Watts	Typical Forward Current Gain	Typical Frequency in MHz
NPN	PNP				BV_{CBO}	BV_{CEO}	I_C	P_D	h_{FE}	f_T
155	**131**	Audio Power Amp	Japan TO66	30	32	20	3 Peak	6 (T_C=63°C)	110	1
–	**226**	AF Power Output	Japan TO66	30	35	35	2	12	125	0.45
103A	**102A**	Power Output, Driver, Switch	TO1	26	32	32	1	0.65	100	2.3
–	**158**	Audio Power Amp	TO1	26	32	32	1	1.6	90	1.5
–	**27**	High Current Amp	TO3	1a	60	45	60	170	120	2.0KHz
–	**104**	Audio Power Amp	TO3	1a	50	35	10	90	90	10KHz
–	**121**	Audio Power Amp	TO3	1a	60	30	5	106	75 Min	4KHz
–	**179**	Audio Power Amp	TO3	1a	90	90 (CEV)	25	106	55 Min	0.35 Min
–	**127**	Amp, Power Output Horiz. & Vert. Deflection	TO3	1a	350	350 (CES)	10	56	15 Min	1
101	**100**	Osc Mixer for AM Radio, Medium Speed Switch	TO5	25a	20	20	0.3	0.15	40	5
103	**102**	Power Output, Driver, Switch	TO5	25a	30	16	0.25/0.3	0.15	90	2
–	**126A**	RF–IF Amp, Mixer, High Speed Swicth	TO18	28a	15	15	0.05	300	40	250
–	**126**	RF–IF Amp, TV, Radio, High Speed Switch	TO18	28a	25	18	0.2	0.2	60	250
–	**105**	Audio Power Amp	TO36	27	50	35	15	100	90	10KHz
–	**213**	High Power, High Gain Amplifier	TO36	27	75	65	30	170	80	0.27
–	**330**	High Power Switch for Motor Drive Controls and Low Loss Reg	TO36	27	50	40	25	170	30	–
–	**176**	Audio Power Amp	TO39	21a	25	25	2	6	110	0.7
–	**28**	High Current Amp	TO68	2	60	45	60	170	120	2KHz
–	**160**	RF–IF Amp, FM Mixer	TO72	31a	30	20	0.01	0.2	20	400

See Diagrams, beginning on Page 1–42

POWER MOS FIELD EFFECT TRANSISTORS

NTE Type Number	Description and Application	Case Style	Diag. Number	Drain to Source Breakdown Voltage (Volts) BV_{DSS}	Gate to Source Cutoff Voltage (Volts) $V_{gs}(Off)$	Gate to Source Breakdown Voltage (Volts) BV_{GSS}	Maximum Continuous Drain Current (Amps) I_D	Static Drain to on Source Resistance (Ohms) $r_{DS}(On)$	Input Capacitance (pf) C_{iss}	Forward Transcon–ductance (μmhos) gfs	Device Total Power Dissipation @T_C=25°C (Watts) P_D
66	N–CHANNEL Enhancement Mode High Speed Switch	TO220	11b	100 Min	4.5 Max	±20 Max	12	0.18 Max	1200 Max	3000 Min	75 Max
				$t_d(off)$ = 200ns, $t_d(on)$ = 50ns, t_f = 100ns, t_r = 150ns							
67	N–CHANNEL Enhancement Mode High Speed Switch	TO220	11b	400 Min	4.5 Max	±20 Max	5.5	1 Max	1200 Max	3000 Min	75 Max
				$t_d(off)$ = 55ns, $t_d(on)$ = 30ns, t_f = 35ns							
2380	N–CHANNEL Enhancement Mode High Speed Switch (Compl to NTE2381)	TO220	11b	500 Min	4.5 Max	±20 Max	2	4 Max	500 Max	1000 Min	75 Max
				$t_d(off)$ = 60ns, $t_d(on)$ = 40ns, t_f = 30ns, t_r = 60ns							
2381	P–CHANNEL Enhancement Mode High Speed Switch (Compl to NTE2380)	TO220	11b	500 Min	4.5 Max	±20 Max	2	6 Max	100 Max	500 Min	75 Max
				$t_d(off)$ = 150ns, $t_d(on)$ = 50ns, t_f = 50ns, t_r = 100ns							
2382	N–CHANNEL Enhancement Mode High Speed Switch (Compl to NTE2383)	TO220	11b	100 Min	4.5 Max	±20 Max	8	0.5 Max	400 Max	1500 Min	75 Max
				$t_d(off)$ = 50ns, $t_d(on)$ = 50ns, t_f = 60ns, t_r = 120ns							
2383	P–CHANNEL Enhancement Mode High Speed Switch (Compl to NTE2382)	TO220	11b	100 Min	4.5 Max	±20 Max	8	0.4 Max	1200 Max	2000 Min	75 Max
				$t_d(off)$ = 200ns, $t_d(on)$ = 80ns, t_f = 150ns, t_r = 150ns							
2384	N–CHANNEL Enhancement Mode High Speed Switch	TO3	1f	800 Min	4 Max	±20 Max	6	1.5 Max	5000 Max	4000 Min	125 Max
				$t_d(off)$ = 320ns, $t_d(on)$ = 50ns, t_f = 100ns, t_r = 100ns							
2385	N–CHANNEL Enhancement Mode High Speed Switch	TO220	11b	500 Min	4 Max	±30 Max	9	0.8 Max	1800 Max	5000 Min	150 Max
				$t_d(off)$ = 250ns, $t_d(on)$ = 40ns, t_f = 90ns, t_r = 90ns							
2386	N–CHANNEL Enhancement Mode High Speed Switch	TO3	1f	600 Min	4.5 Max	±20 Max	6	1.2 Max	1800 Max	2000 Min	150 Max
				$t_d(off)$ = 200ns, $t_d(on)$ = 60ns, t_f = 120ns, t_r = 150ns							
2387	N–CHANNEL Enhancement Mode High Speed Switch	TO220	11b	800 Min	4 Max	±30 Max	4	3 Max	1250 Max	3000 Min	125 Max
				$t_d(off)$ = 150ns, $t_d(on)$ = 25ns, t_f = 60ns, t_r = 40ns							
2388	N–CHANNEL Enhancement Mode High Speed Switch	TO220	11b	200 Min	4 Max	±20 Max	18	0.18 Max	1600 Max	6000 Min	125 Max
				$t_d(off)$ = 80ns, $t_d(on)$ = 30ns, t_f = 60ns, t_r = 60ns							
2390	N–CHANNEL Enhancement Mode High Speed Switch	TO220	11b	60 Min	4.5 Max	±20 Max	12	0.2 Max	400 Max	4000 Min	75 Max
				$t_d(off)$ = 80ns, $t_d(on)$ = 60ns, t_f = 110ns, t_r = 160ns							
2392	N–CHANNEL Enhancement Mode High Speed Switch	TO3	1f	100 Min	4 Max	±20 Max	33	0.08 Max	3000 Max	9000 Min	150 Max
				$t_d(off)$ = 125ns, $t_d(on)$ = 35ns, t_f = 100ns, t_r = 100ns							

See Diagrams, beginning on Page 1–42

NTE Type No.	Polarity and Material	Description and Application	Case Style	Diag. No.	Voltage Gate to Source (Volts)	Cutoff Voltage Gate to Source (Volts)	Drain Current Zero–Gate (mA)	Drain Current (mA)	Res Drain to Source (Ohms)	Cap Input (pf)	Rev Trans Cap (pf)	Transcon–ductance (μmhos)	Power Dissp (mW)
					Min	Max(OFF)	Min – Max	Max(OFF)	Max(ON)	Max	Max	Typ	Max
					BV_{GSS}	V_{GS}	I_{DSS}	I_D	r_{DSS}	C_{iss}	C_{rss}	gfs	P_D
132	JFET N–CH	VHF Amp/Mix, NF 4dB Max at 400MHz	TO106	29b	25	8	2–20	–	–	5	1.2	4500	310
133	JFET N–CH	Gen Purp AF Amp Switch	TO106	29b	25	6	0.5–15	–	–	6	2	4000	300
221	Dual Gate MOSFET N–CH	VHF Amp/Mix NF 5dB Max at 200MHz	TO72	31d	20	6	18 Typ	–	–	5.5	0.03	15000	400
222	Dual Gate MOSFET N–CH	VHF Amp/Mix, NF 6dB Max at 200MHz Gate Protected	TO72	31d	20	4	5–35	–	–	6 Typ	0.03	12000	330
312	JFET N–CH	VHF Amp/Mix, NF 4dB Max at 400MHz	TO92	9d	30	6	5–15	–	–	4.5	1	5500	360
326	JFET P–CH	Gen Purp AF Amp, NF 2.5dB Max at 100Hz	TO92	9o	60	7.5	2–9	–	–	7	2	3000	310
451	JFET N–CH	UHF/VHF Amp, NF 4dB at 400MHz	TO92	9e	25	4	4–10	–	–	5	1	4000	310
452	JFET N–CH	VHF Amp/Mix NF 4dB at 400MHz	TO72	31e	30	6	5–15	–	–	4	0.8	5500	300
453	JFET N–CH	FM Tuner/VHF Amp, NF 2dB at 100MHz	TO98M/ TO92	36/ 9e	18	3 Typ	12–24	–	–	–	0.65	7000	200
454	Dual Gate MOSFET N–CH	UHF/VHF Preamp, NF 4.5dB at 200MHz Gate Protected	TO72	31d	25 (DSX)	5	6–30	–	–	3.3 Typ	0.03	15000	360
455	Dual Gate MOSFET N–CH	TV UHF/RF Amp 900MHz Range, Gate Protected	–	12	20 (DSX)	$G_1 = 2$ $G_2 = 0.7$	0.5–8	25	–	2.5	0.03	22000	200
456	JFET N–CH	Gen Purp Amp/Sw NF 2.5dB at 100KHz	TO72	31c	30	6	2–6	15	400	6	2	3500	300
457	JFET N–CH	Gen Purp Amp/Sw	TO92	9e	25	6	1–5	–	–	7	3	3000	310
458	JFET N–CH	Gen Purp Low Noise NF 3.0dB at 100KHz	TO92	9f	50	1.5	0.5–12	20	–	13	2.6 Typ	12000	250
459	JFET N–CH	AF Amp/Chopper/ Sw	TO72	31e	50	6	2–10	10	–	6	3	4500	300
460	JFET	AF Amp, AC Input Impedance 5M @ 1KC	TO72	31f	20	6	2–6	10	800	20	–	2500	300
461	Dual Matched Pr JFET N–CH	DC Amp/Sampler/ Chopper (0.95 ratio)	TO71	44	50	4.5	0.5–8	30	–	6	2	3500	250 (Each) 400 (Total)
466	JFET N–CH	Chopper/Sw	TO18	28c	40	10	50 Min	250pA	18	–	–	360	467
467	JFET N–CH	Chopper/High Speed Switching	TO92	9e	30	12	50 Min	1.0nA	30	10	4	–	310

See Diagrams, beginning on Page 1–42

DIMENSIONAL OUTLINE DRAWINGS

Diagram 1

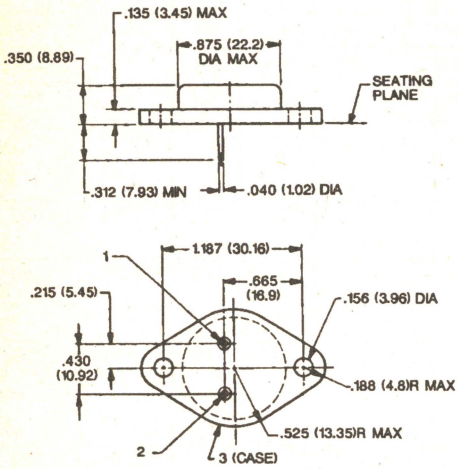

TO3

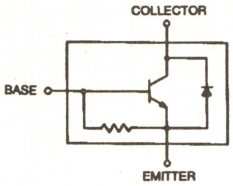

NTE89

	1	2	CASE
a	B	E	C
f	G	S	D

Diagram 2

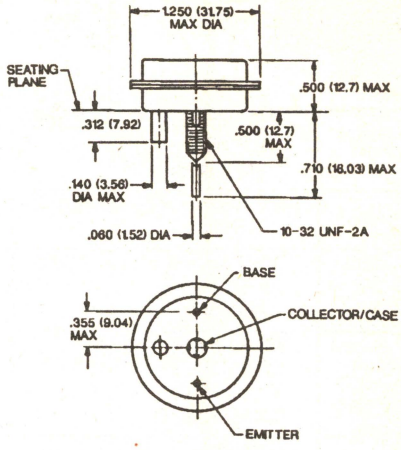

TO68

Diagram 3

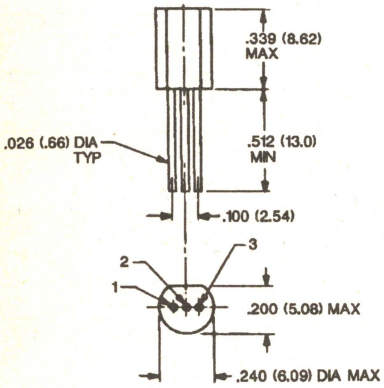

Giant TO92

	1	2	3
a	E	B	C
b	E	C	B

Diagram 4

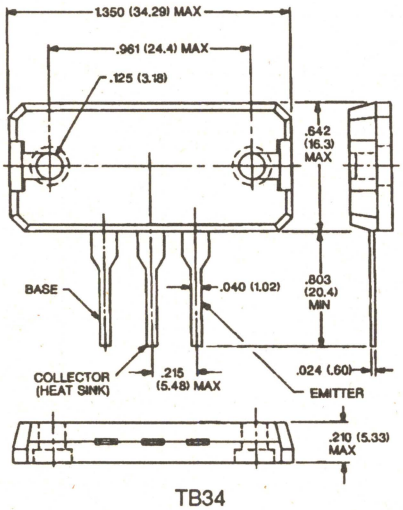

TB34

Diagram 6

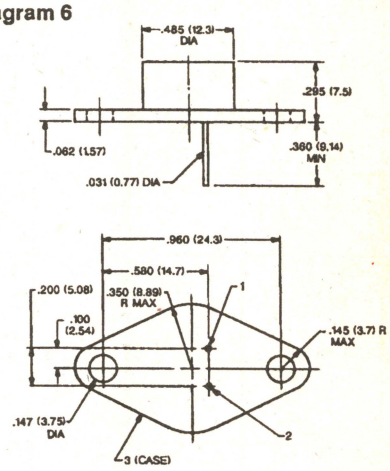

TO66

	1	2	CASE
a	B	E	C

Diagram 7

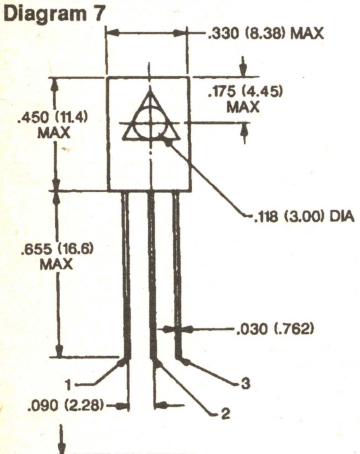

TO126

	1	2	3
a	E	C	B

Diagram 8

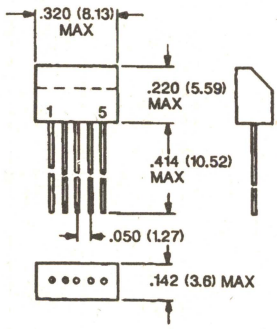

	1	2	3	4	5
a	B	C	E	C	B
b	E	C	B	C	E

Diagram 9

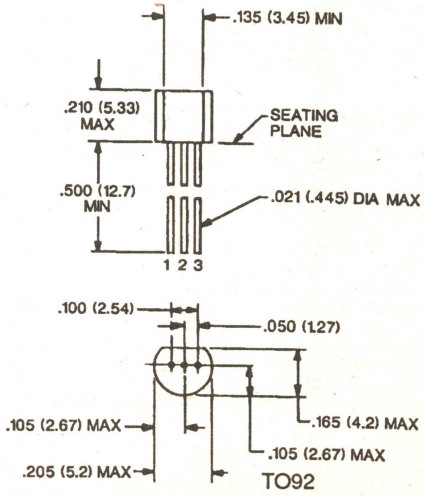

TO92

	1	2	3
a	E	B	C
b	B	E	C
c	E	C	B
d	G	S	D
e	D	S	G
f	D	G	S
o	S	D	G

Note: D & S are interchangeable on NTE312

DIMENSIONAL OUTLINE DRAWINGS

Diagram 10

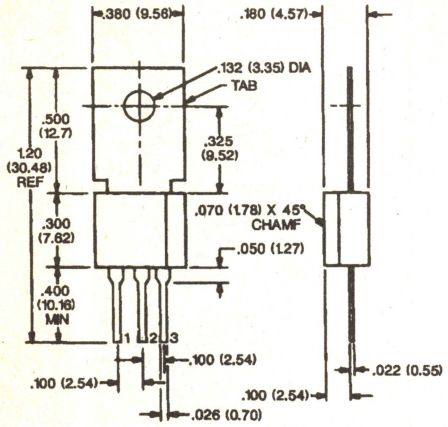

	1	2	3	TAB
a	E	B	C	C
b	B	C	E	C
c	C	B	E	C
e	B	E	C	E

TO202

Diagram 11

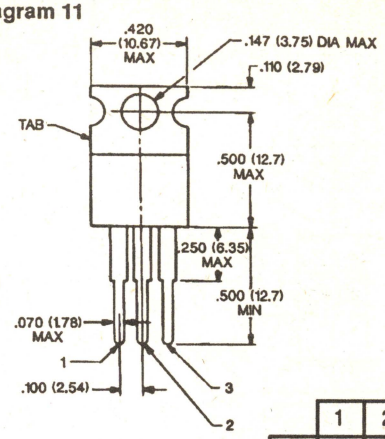

	1	2	3	TAB
a	B	C	E	C
b	G	D	S	D
I	B	C	E	ISO

TO220

Diagram 12

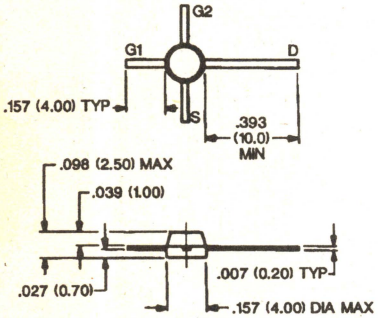

Diagram 13

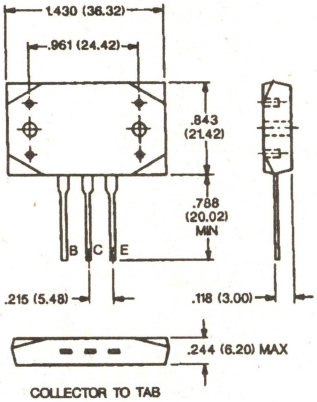

Diagram 14

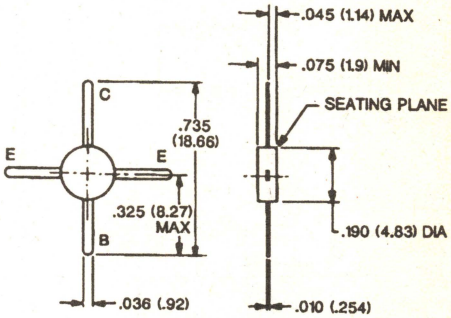

Diagram 15

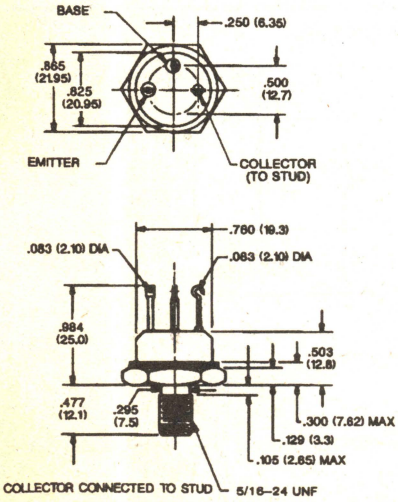

TO63

Diagram 16

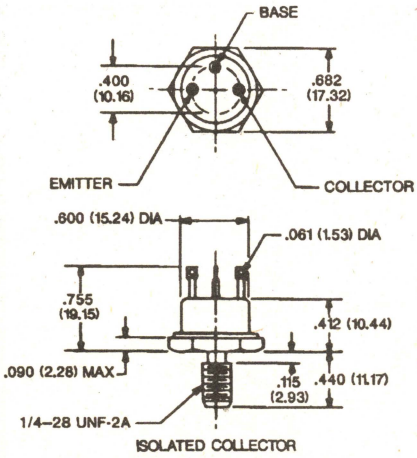

TO61

Diagram 17

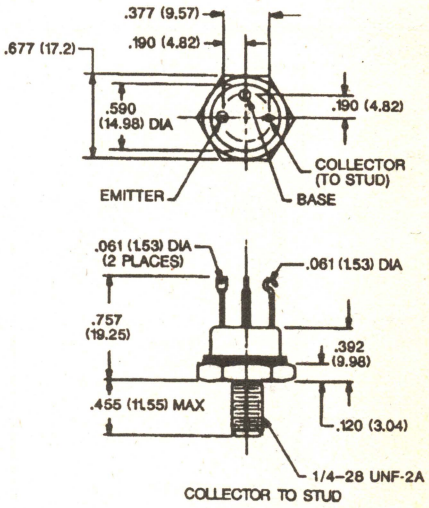

TO61

DIMENSIONAL OUTLINE DRAWINGS

Diagram 18a

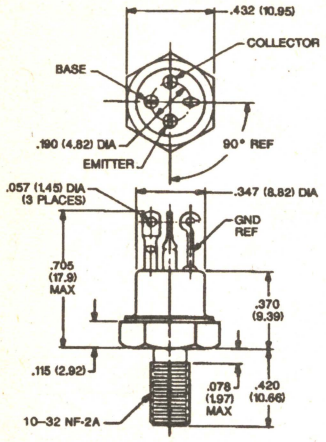

18a – Isolated Stud

TO111

Diagram 18b & c

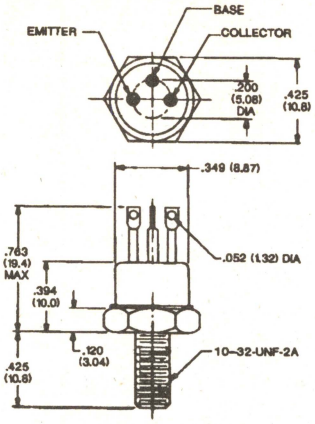

18b – Isolated Collector
18c – Collector to Stud

TO59

Diagram 19

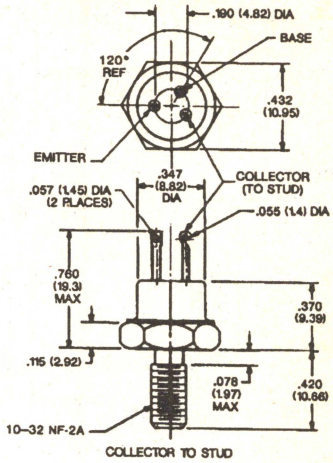

TO111

Diagram 20

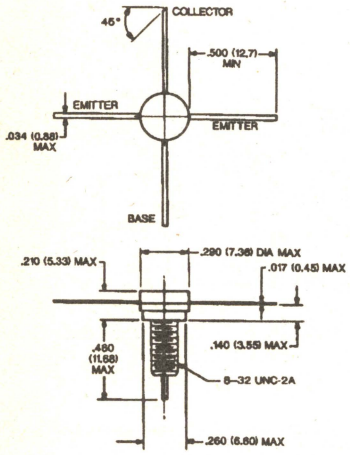

TO117

Diagram 21

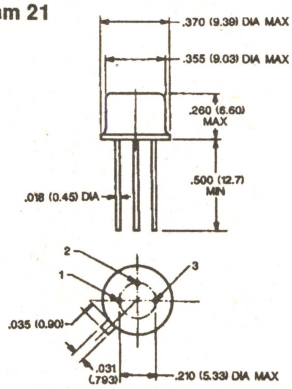

	1	2	3	CASE
a	E	B	C	C
b	C	B	E	E
c	E	B	C	E

TO39

Diagram 22

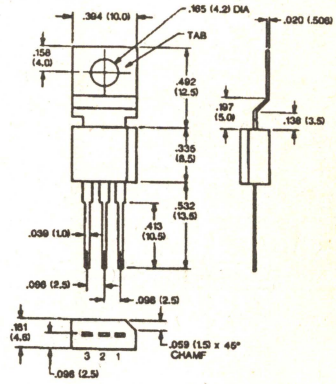

	1	2	3	TAB
a	E	C	B	C
b	C	B	E	C

TO202M

Diagram 23

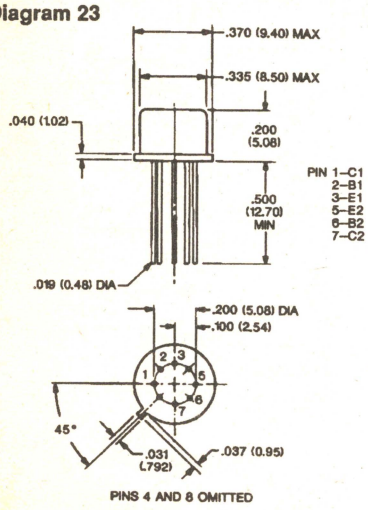

PINS 4 AND 8 OMITTED

TO78

Diagram 25

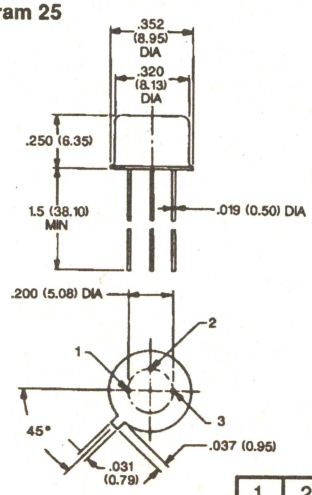

	1	2	3
a	E	B	C

TO5

Diagram 26

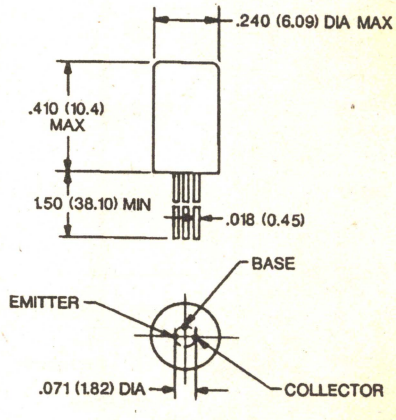

TO1

DIMENSIONAL OUTLINE DRAWINGS

Diagram 27

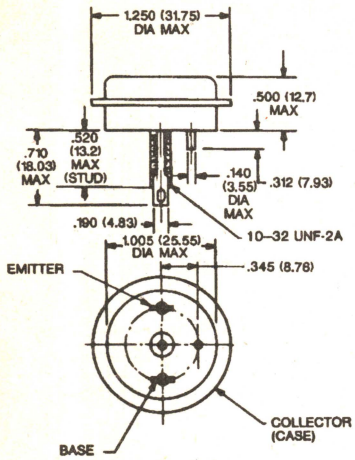

TO36

Diagram 28

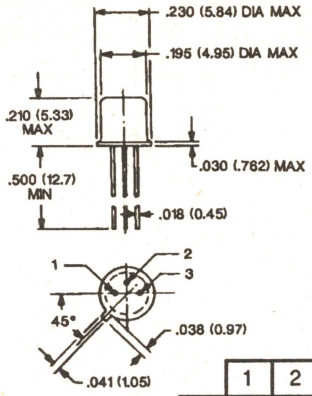

	1	2	3
a	E	B	C
b	S	G	D
c	S	D	G

TO18

Diagram 29

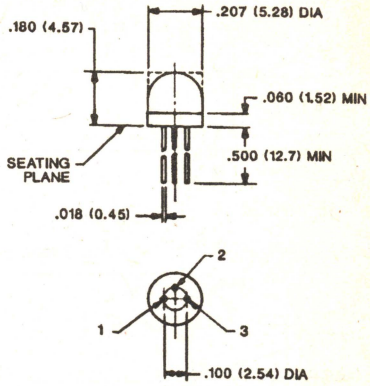

	1	2	3
a	E	B	C
b	S	D	G

TO106

Diagram 30

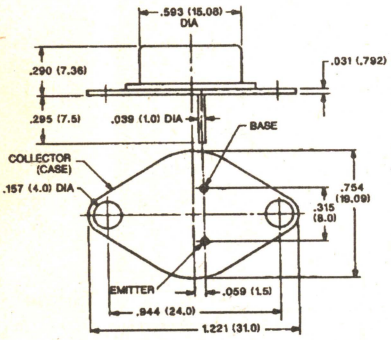

Japanese TO66

Diagram 31

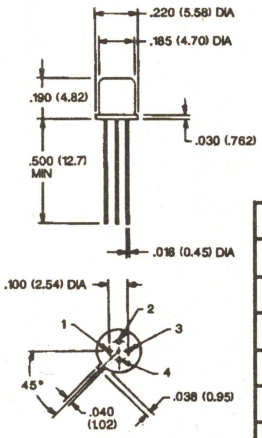

	1	2	3	4
a	E	B	C	CASE
b	B	E	C	CASE
c	D	S	G	S/CASE
d	D	G2	G1	S/CASE
e	S	D	G	CASE
f	S	G	D	CASE
g	S	G	D	S/CASE

Note: D & S interchangeable on NTE459

TO72

Diagram 33

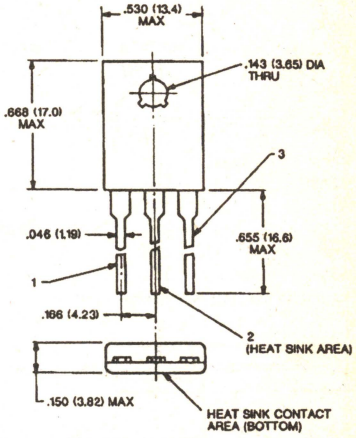

	1	2	3
a	E	C	B

TO127

Diagram 34

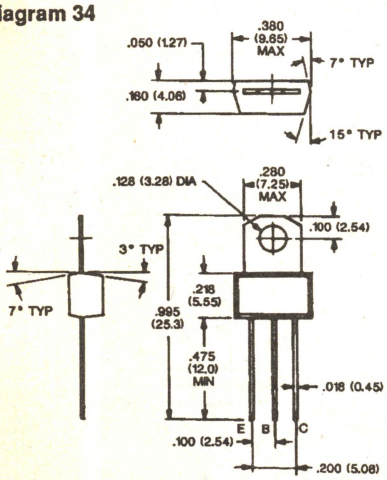

COLLECTOR CONNECTED TO TAB

TO202N

Diagram 35

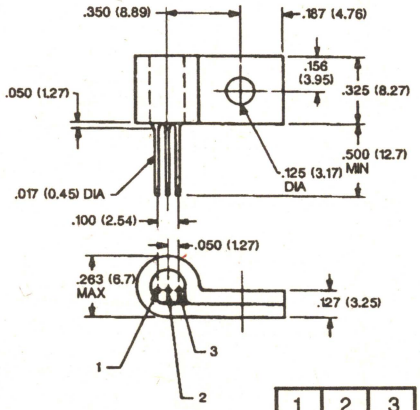

	1	2	3
a	C	B	E
b	B	C	E

TO92HS

Diagram 36

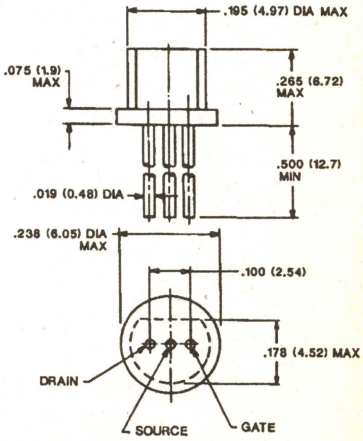

TO98M

DIMENSIONAL OUTLINE DRAWINGS

Diagram 37

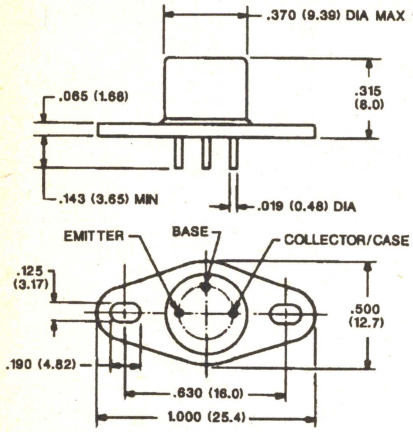

TO39F

Diagram 39

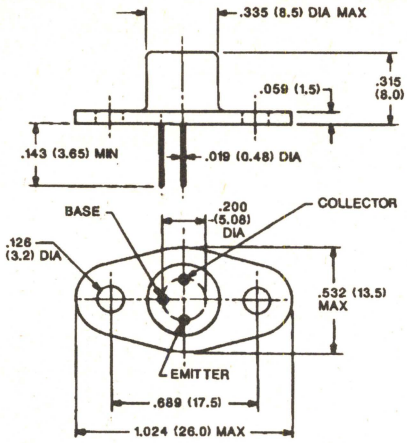

TO39HS

Diagram 40

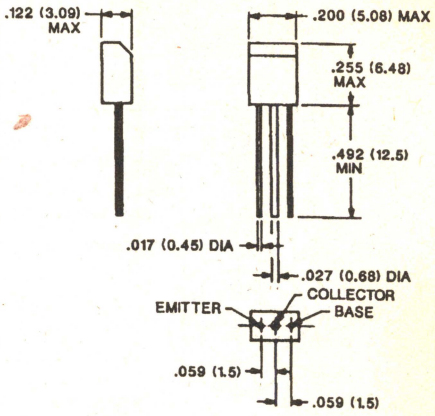

U83

Diagram 41

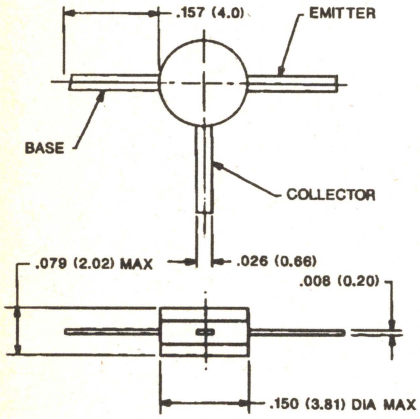

Diagram 42

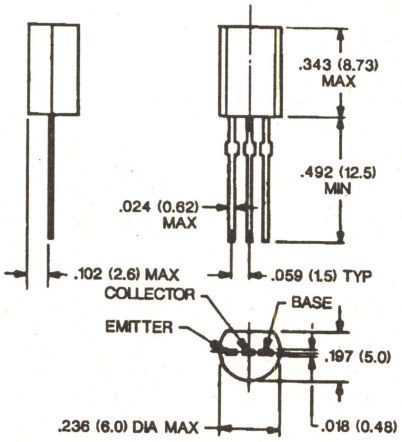

Diagram 43

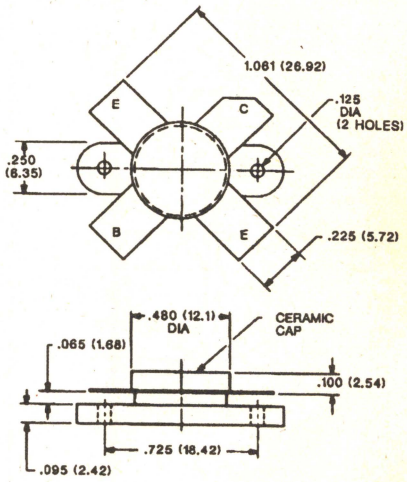

W52

Diagram 44

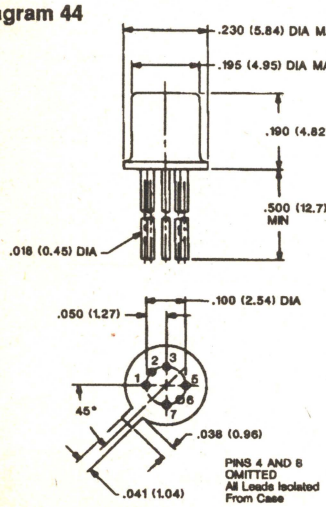

TO71

Diagram 45

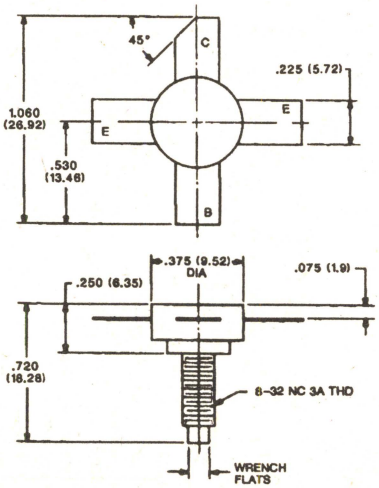

Diagram 46

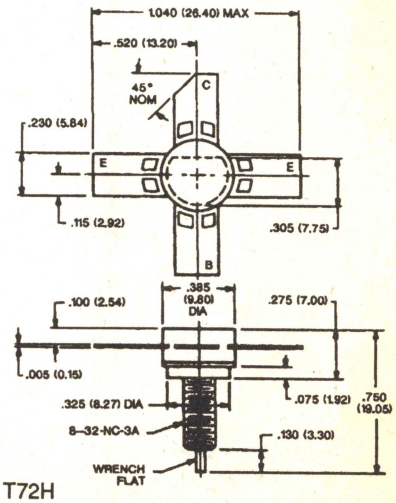

T72H

DIMENSIONAL OUTLINE DRAWINGS

Diagram 47

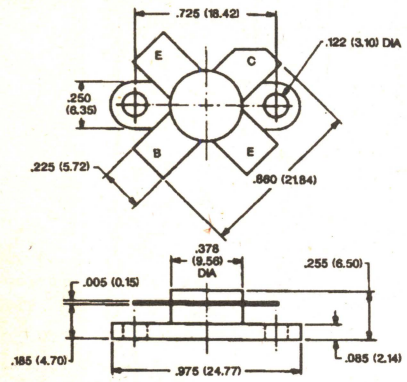

W52K

Diagram 48

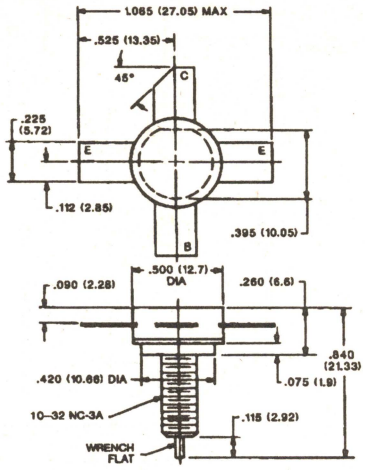

T93D

Diagram 50

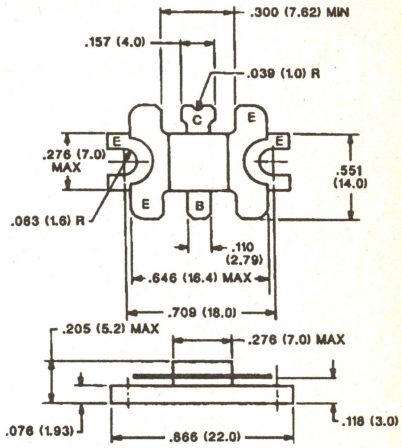

Diagram 51

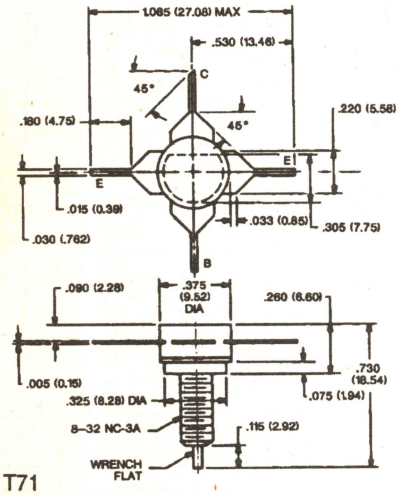

T71

Diagram 52

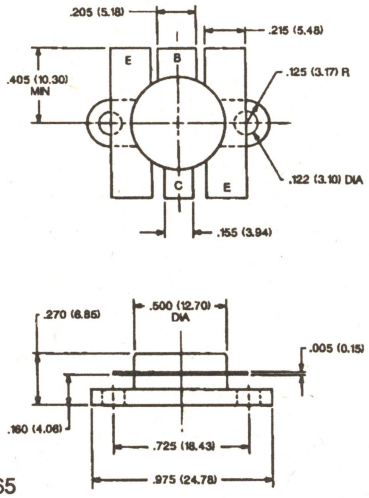

W65

Diagram 53

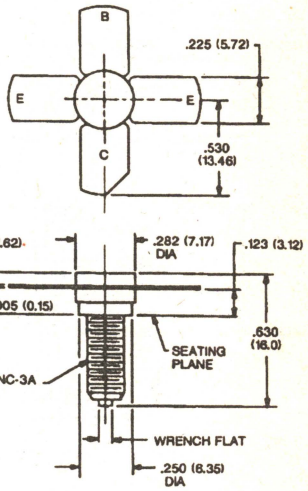

Diagram 54

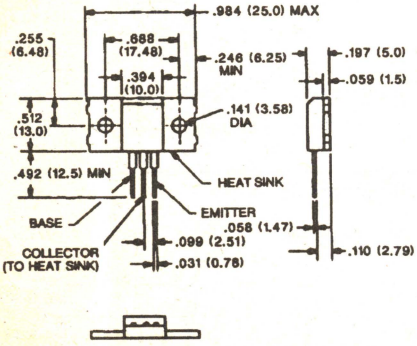

Diagram 55

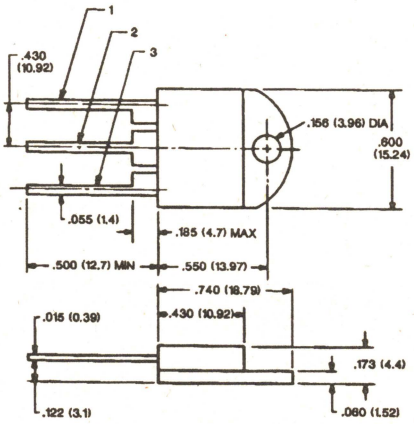

TO218

	1	2	3
a	B	C	E

Diagram 58

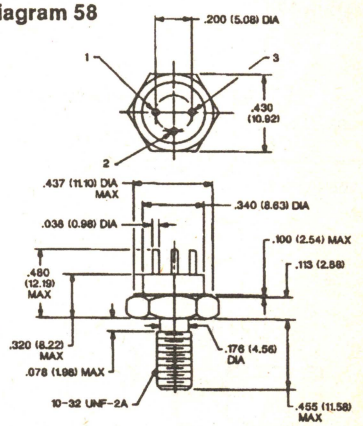

	1	2	3	STUD
a	C	B	E	E
b	C	B	E	ISO

DIMENSIONAL OUTLINE DRAWINGS

Diagram 59

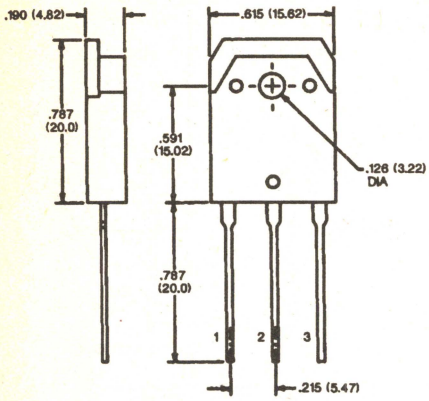

TO3P

	1	2	3	CASE
a	B	C	E	C

Diagram 59 alt.

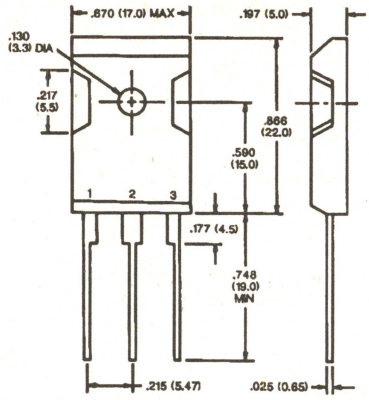

	1	2	3	CASE
a	B	C	E	C

Diagram 60

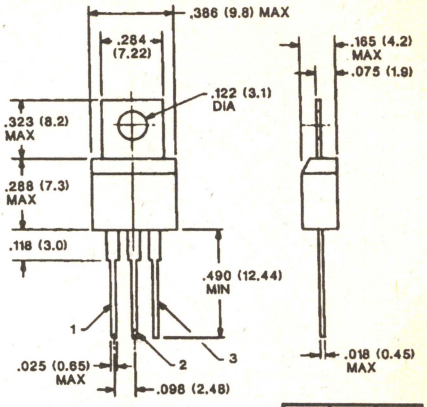

	1	2	3
a	B	C	E
b	E	B	C

Diagram 61

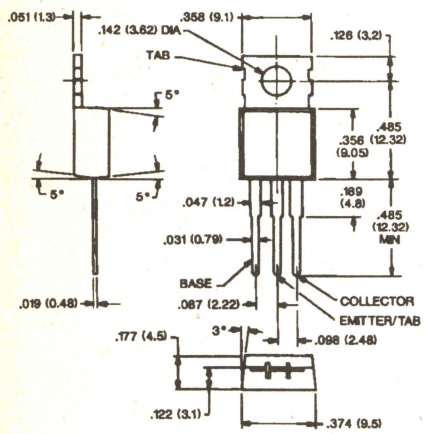

Diagram 63

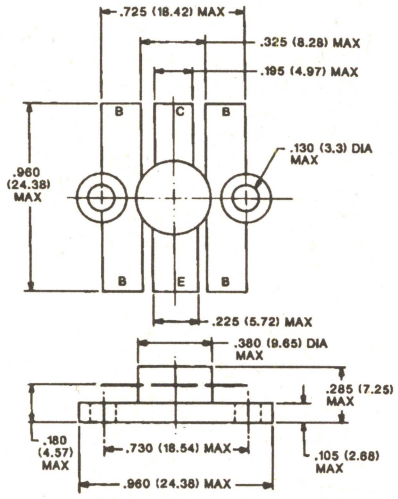

Diagram 170

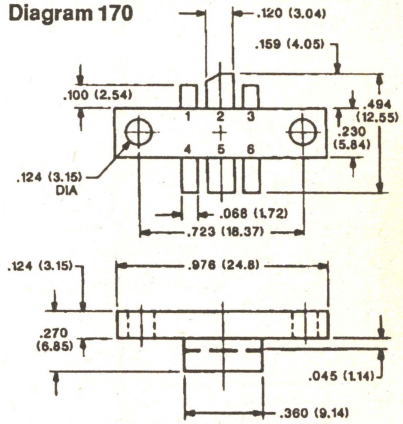

	1	2	3	4	5	6
a	E	C	E	E	B	E
b	B	C	B	B	E	B

Diagram 175

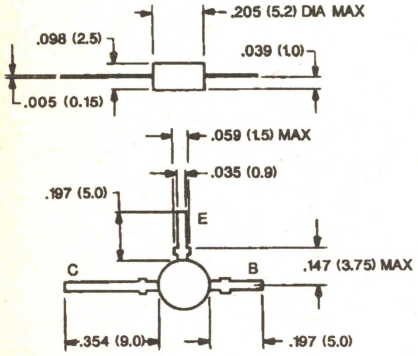

Diagram 247

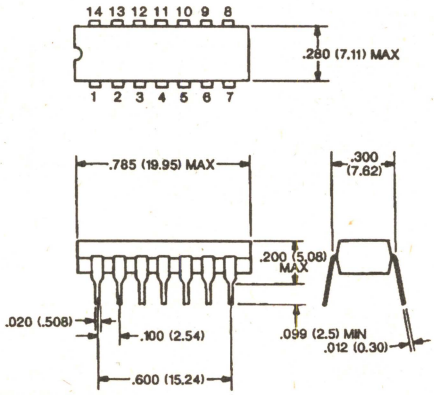

Diagram 411

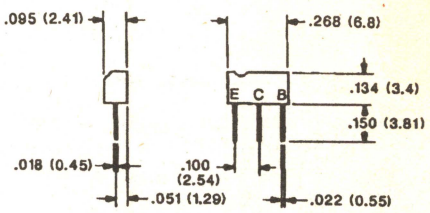

Diagram 412

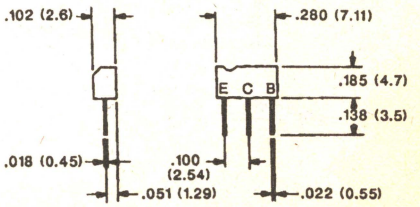

DIMENSIONAL OUTLINE DRAWINGS

Diagram 413

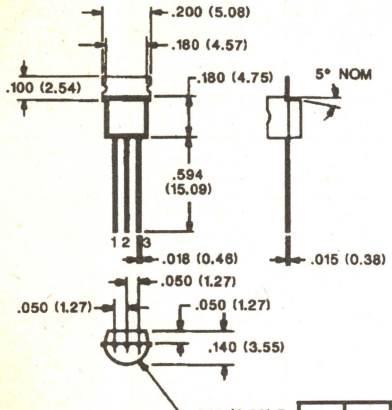

	1	2	3
a	E	B	C
b	E	C	B

TO237

Diagram 475

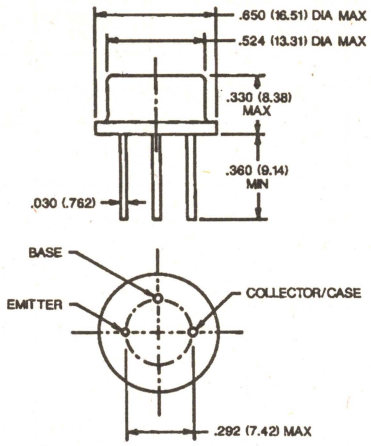

TO8

Diagram 477

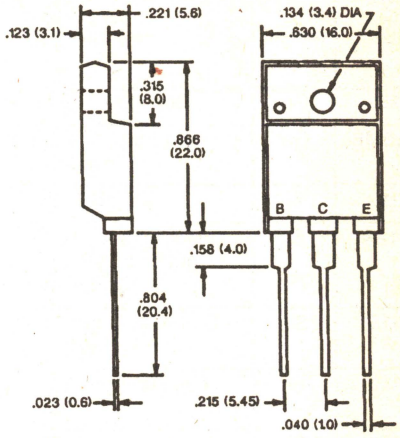

Diagram 508

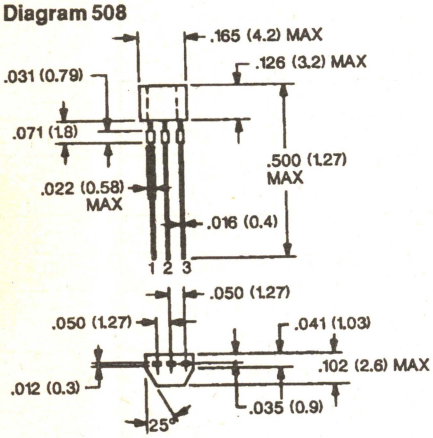

1. EMITTER
2. COLLECTOR
3. BASE

Diagram 516

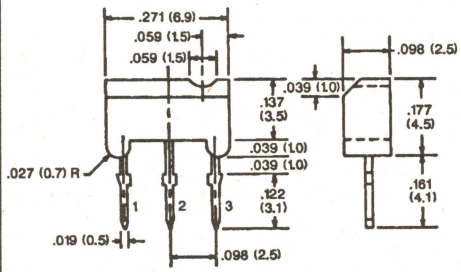

	1	2	3
a	B	C	E

Diagram 523

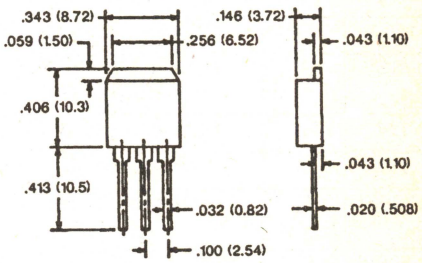

1. BASE
2. COLLECTOR
3. EMITTER

Diagram 547

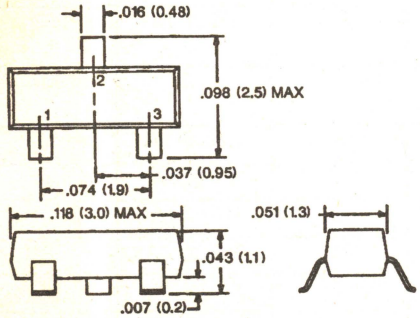

	1	2	3
a	B	C	E
b	B/IN	C/OUT	E/GND

SOT–23

Diagram 555

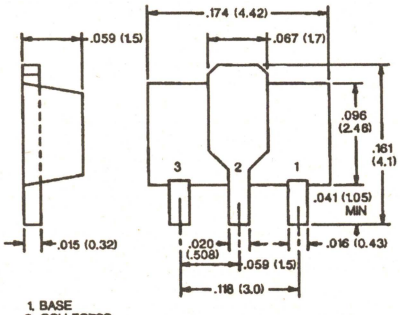

1. BASE
2. COLLECTOR
3. EMITTER

BOTTOM VIEW

SOT–89

Diagram 556

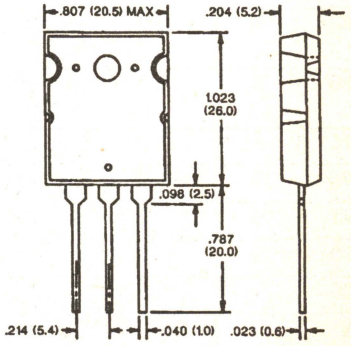

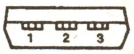

1. BASE
2. COLLECTOR/ HEAT SINK
3. EMITTER

DIODES AND RECTIFIERS GENERAL PURPOSE

NTE Type No.	Material	Description and Application	Case Style	Diag. No.	Maximum Peak Reverse Voltage (Volts) P_{RV}	Maximum Average Forward Current (Amps) I_F	Max Peak Surge Forward Current (Amps) I_{FSM}	Maximum Forward Voltage Drop (Volts) V_F	Reverse Recovery Time (ns) t_{rr}
109	Ge	Gen Purp, Fast Switch	DO7	91	100	0.2	0.5	1	–
110MP	Ge	Gen Purp, AFC, Matched Diode Pair	DO7	91	30	100µA	–	–	–
112	Si	TV UHF Mixer	DO7	91	5	0.025	–	0.5 @ 15mA	–
113A	Si	Dual Diode for TV Horiz Appl, Common Cathode Positive Center Tap	–	104	100	1.5	50	0.95 @ 1A	–
115	Se	Common Anode Dual Diode for TV Application	–	101b	20	0.15mA	–	–	–
116	Si	General Purpose Rectifier	DO41	92	600	1	30	1.1 @ 1A Typ	–
117	Si	General Purpose Metal Case Rectifier	DO26	99	600	1	–	1.2 @ 0.5A	–
120	Se	General Purpose, Color TV Convg Rectifier	–	100a	18	0.065	–	–	–
125	Si	General Purpose Rectifier	DO41	92	1000	2.5	30	0.8 @ 1A Typ	–
156	Si	General Purpose Rectifier	DO15	105	1000	3	–	1.1 @ 3A	–
156A	Si	General Purpose Rectifier	DO27A	98	1000	3.5	125	1.1 @ 3.5A	–
173BP	Si	Damper Diode for TV Appl Bridged Pair	–	190	5000	0.6	8	4.4 @ 0.5A	4µs
174	Ge	Damper Diode for TV Appl	TO66	173	270	6	25	0.6 @ 5A	–
177	Si	Fast Sw, Det, etc.	DO35	93	200	0.16	0.25	1 @ 0.1	50
178MP	Si	Matched Diode Pair AFC, AFT, etc.	DO7	91	50	0.07	0.1	1 @ 5mA	–
506	Si	Sw, Fast Recovery, Bst, Damper, Blanking	–	535	1400	2	35	1 @ 1A	500
507	Si	Fast Recovery	DO41	92	50	1	30	1.1 @ 1A	200
515	Si	Fast Recovery Horizontal Deflection Rectifier	–	392	800	2.5	70	1.3 @ 4A	1.3µs
519	Si	Fast Sw Diode	DO35	93	75	0.2	–	1 @ 0.1A	4
525	Si	High Vltg Fast Recovery Sw	DO41	92	2000	1	150	2 @ 1A	3µs
551	Si	Fast Recovery Rect Metal Case	–	185	1500	1	60	1.5 @ 2A	1µs
552	Si	Gen Purp Rect, Fast Rec, Fast Sw	DO41	92	600	1	30	1.1 @ 1A	200
558	Si	High Voltage Fast Recovery Rectifier	DO41	92	1500	1	30	1.2	250
576	Si	Gen Purp, Sw, Super Fast Rec	DO27	541	400	5	150	1.25 @ 5A	35
577	Si	Gen Purp, Sw, Fast Recovery	DO27	541	1000	5	200	1.7 @ 5A	70
578	Si	Schottky Barrier	DO41	92	90	1	25	0.6 @ 1A	–
579	Si	Schottky Barrier	DO27	541	90	3	80	0.74 @ 3A	–
580	Si	Fast Rec, Gen Purp Rectifier	–	381	600	3	100	1.1 @ 3A	200
581	Si	Fast Rec, Gen Purp Rectifier	TO220	380	400	8	150	1.2 @ 3A	150
583	Si	Schottky Switching for High Level UHF/VHF Detection and Pulse Application	DO35	93	70	0.015	0.05	0.41 @ 1mA	–

** = Denotes Surface Mount Types

See Diagrams, beginning on Page 1–54

NTE Type No.	Material	Description and Application	Case Style	Diag. No.	Maximum Peak Reverse Voltage (Volts) P_{RV}	Maximum Average Forward Current (Amps) I_F	Max Peak Surge Forward Current (Amps) I_{FSM}	Maximum Forward Voltage Drop (Volts) V_F	Reverse Recovery Time (ns) t_{rr}
584	Si	Schottky Switching for High Level UHF/VHF Detection and Pulse Application	DO35	93	20	0.035	0.1	0.41 @ 1mA	–
585	Si	Fast Switching Schottky Barrier	DO41	92	40	1	25	0.6 @ 1A	–
586	Si	Fast Switching Schottky Barrier	DO27	541	40	3	80	0.525 @ 3A	–
587	Si	Switch, Ultra Fast	DO41	92	200	1	30	0.95 @ 1A	35
588	Si	Switch, Ultra Fast	DO127	541	200	3	125	0.95 @ 3A	35
590	Si	Dual, Common Cathode, Sw	–	441a	75	0.3	6 @ 1µs	1.2 @ 0.1A	3
591	Si	Dual, Common Anode, Sw	–	441b	75	0.3	6 @ 1µs	1.2 @ 0.1A	4
592**	Si	High Vltg, Gen Purpose	SOT–23	547d	200	0.2	2.5 @ 1µs	1.25 @ 0.2A	50
593**	Si	High Speed, Sw	SOT–23	547d	75	0.25	2 @ 1µs	1 @ 0.05A	6
594**	Si	Bandswitch, $r_D = 0.7\Omega$ @ 200MHz	SOT–23	547d	35	0.1	–	1.2 @ 0.1A	–
595**	Si	Dual, Common Cathode, High Speed	SOT–23	547c	70	0.5 Per Device 0.25 Per Diode	2 @ 1µs	1 @ 0.25A	6
596**	Si	Dual Common Anode, High Speed	SOT–23	547e	70	0.6 Per Device 0.25 Per Diode	2 @ 1µs	1 @ 0.05A	6
597	Si	Ultra Fast Sw	TO220	461	200	8	125	0.95 @ 8A	35
598	Si	Ultra Fast Sw	TO220	461	600	8	100	1.5 @ 8A	60
599	Si	Ultra Fast Sw	TO220	461	200	15	250	0.975 @ 15A	35
6085	Si	Schottky, Dual	TO220	502a	45	15 Per Device 7.5 Per Diode	150	0.84 @ 15A	–
6087	Si	Schottky, Dual for High Freq Output in Low Vltg, High Current Switching Regulator Pwr Supplies	TO220	502a	45	30	150	0.82 @ 30A	–
6090	Si	Schottky, Dual for Output in Low Vltg, High Current Switching Pwr Supplies	TO3P/ TO218	59d/ 503	45	30	400	0.760 @ 30A	–
6200	Si	Dual Rectifier, Positive Center Tap	TO3 Cath/ Case	396	200	30	300	1.2 @ 15A Per Element	–
6202	Si	Dual Rectifier, Positive Center Tap	TO3 Cath/ Case	396	400	30	300	1.2 @ 15A Per Element	–
6204	Si	Dual Rectifier, Positive Center Tap	TO3 Cath/ Case	396	600	30	300	1.2 @ 15A Per Element	–
6206	Si	Fast Recovery, Dual Rectifier Positive Center Tap	TO3 Cath/ Case	396	200	30	200	1.4 @ 15A Per Element	200
6208	Si	Fast Recovery, Dual Rectifier Positive Center Tap	TO3 Cath/ Case	396	400	30	200	1.4 @ 15A Per Element	200

** = Denotes Surface Mount Types

See Diagrams, beginning on Page 1–54

DIODES AND RECTIFIERS GENERAL PURPOSE

NTE Type No.	Material	Description and Application	Case Style	Diag. No.	Maximum Peak Reverse Voltage (Volts)	Maximum Average Forward Current (Amps)	Max Peak Surge Forward Current (Amps)	Maximum Forward Voltage Drop (Volts)	Reverse Recovery Time (ns)
					P_{RV}	I_F	I_{FSM}	V_F	t_{rr}
6210	Si	Fast Recovery, Dual Rectifier Positive Center Tap	TO3 Cath/ Case	396	600	30	200	1.4 @ 15A Per Element	200
6240	Si	Super Fast, Dual Center Tap	TO220	502a	200	20	150	1.4 @ 50A	35
6241	Si	Super Fast, Dual Center Tap	TO220	502a	600	16	100	1.5 @ 8A Per Element	50
6244	Si	Super Fast, Dual Center Tap	TO220	502b	200	20	150	1.4 @ 15A	35
6246	Si	Dual, Switch Mode	TO218	503	200	30	200	1.05 @ 15A	35
6247	Si	Super Fast, Dual Center Tap	TO218	503	600	30	150	1.5 @ 15A Per Element	60

FULL WAVE RECTIFIERS

STANDARD & FAST RECOVERY

NTE Type No.	Diag. No.	Case Style	Peak Reverse Voltage (Volts)	Average Rectified Forward Current (Amps) (Per Device)	Forward Voltage Drop (Volts) (Per Diode)	Forward Surge Peak Current (Amps) (Per Diode)	Reverse Recovery Time (ns)
			P_{RV}	I_O	V_F	I_{FSM}	t_{rr}
6200	396	TO3	200	30	1.2	250	–
6202	396	TO3	400	30	1.2	250	–
6204	396	TO3	600	30	1.2	250	–
6206	396	TO3	200	30	1.4	150	200
6208	396	TO3	400	30	1.4	150	200
6210	396	TO3	600	30	1.4	150	200
6240	502a	TO220	200	20	1.4 @ 50A	150	35
6241	502a	TO220	600	16	1.5 @ 8A	100	50
6244	502b	TO220	200	20	1.4 @ 50A	150	35
6246	503	TO218	200	30	1.05 @ 15A	200	35
6247	503	TO218	600	30	1.5 @ 15A	150	60

** = Denotes Surface Mount Types

See Diagrams, beginning on Page 1–54

ZENER DIODES

Rated Voltage ±5%	P_D	NTE Number Axial Leads			NTE Number Stud Mount		Rated Voltage ±5%	P_D	NTE Number Axial Leads			NTE Number Stud Mount	
		1/2 Watt	1 Watt	5 Watt	10 Watt	50 Watt			1/2 Watt	1 Watt	5 Watt	10 Watt	50 Watt
	Pkg.	DO35	DO41/DO15		DO4	DO5		Pkg.	DO35	DO41/DO15		DO4	DO5
2.4		5000A	5061A	–	–	–	28.0		5034A	5083A	5140A	5201A	5267A
2.5		5001A	5062A	–	–	–	30.0		5035A	5084A	5141A	5202A	5268A
2.7		5002A	5063A	–	–	–	33.0		5036A	147A	5142A	5203A	5269A
2.8		5003A	5064A	–	–	–	36.0		5037A	5085A	5143A	5204A	5270A
3.0		5004A	5065A	–	–	–	39.0		5038A	5086A	5144A	5205A	5271A
3.3		5005A	5066A	5111A	–	–	43.0		5039A	5087A	5145A	5206A	5272A
3.6		5006A	134A	5112A	–	–	45.0		–	–	–	5207A	5273A
3.9		5007A	5067A	5113A	5174A	5240A	47.0		5040A	5088A	5146A	5208A	5274A
4.3		5008A	5068A	5114A	5175A	5241A	50.0		–	–	–	5209A	5275A
4.7		5009A	5069A	5115A	5176A	5242A	51.0		5041A	5089A	5147A	5210A	5276A
5.1		5010A	135A	5116A	5177A	5243A	52.0		–	–	–	5211A	5277A
5.6		5011A	136A	5117A	5178A	5244A	55.0		–	148A	–	–	–
6.0		5012A	5070A	5118A	5179A	5245A	56.0		5042A	5090A	5148A	5212A	5278A
6.2		5013A	137A	5119A	5180A	5246A	60.0		5043A	5091A	5149A	5213A	5279A
6.8		5014A	5071A	5120A	5181A	5247A	62.0		5044A	149A	5150A	5214A	5280A
7.5		5015A	138A	5121A	5182A	5248A	68.0		5045A	5092A	5151A	5215A	5281A
8.2		5016A	5072A	5122A	5183A	5249A	75.0		5046A	5093A	5152A	5216A	5282A
8.7		5017A	5073A	5123A	5184A	5250A	82.0		5047A	150A	5153A	5217A	5283A
9.1		5018A	139A	5124A	5185A	5251A	87.0		5048A	5094A	5154A	5218A	–
10.0		5019A	140A	5125A	5186A	5252A	91.0		5049A	5095A	5155A	5219A	5284A
11.0		5020A	5074A	5126A	5187A	5253A	100.0		5050A	5096A	5156A	5220A	5285A
11.5		–	141A	–	–	–	105.0		–	–	–	5221A	5286A
12.0		5021A	142A	5127A	5188A	5254A	110.0		5051A	151A	5157A	5222A	5287A
13.0		5022A	143A	5128A	5189A	5255A	120.0		5052A	5097A	5158A	5223A	5288A
14.0		5023A	144A	5129A	5190A	5256A	130.0		5053A	5098A	5159A	5224A	5289A
15.0		5024A	145A	5130A	5191A	5257A	140.0		5054A	5099A	5160A	5225A	5290A
16.0		5025A	5075A	5131A	5192A	5258A	150.0		5055A	5100A	5161A	5226A	5291A
17.0		5026A	5076A	5132A	5193A	5259A	160.0		5056A	5101A	5162A	5227A	5292A
18.0		5027A	5077A	5133A	5194A	5260A	170.0		5057A	5102A	5163A	5228A	–
19.0		5028A	5078A	5134A	5195A	5261A	175.0		–	–	–	5229A	5293A
20.0		5029A	5079A	5135A	5196A	5262A	180.0		5058A	5103A	5164A	5230A	5294A
22.0		5030A	5080A	5136A	5197A	5263A	190.0		5059A	5104A	5165A	5231A	5295A
24.0		5031A	5081A	5137A	5198A	5264A	200.0		5060A	5105A	5166A	5232A	5296A
25.0		5032A	5082A	5138A	5199A	5265A							
27.0		5033A	146A	5139A	5200A	5266A							
Diag. No.		93	67	66	65	64	Diag. No.		93	67	66	65	64
Pkg Style		DO35	DO41/DO15		DO4	DO5	Pkg Style		DO35	DO41/DO15		DO4	DO5

NOTE: 10 Watt and 50 Watt Zeners listed have Anode (Standard Polarity) connected to stud. Add suffix letter "K" to the NTE number for Cathode (Reverse Polarity) connected to stud (ex. NTE5175AK). The NTE type numbers shown have a standard tolerance for the Zener Voltage of ±5%.

See Diagrams, beginning on Page 1–54

1/2 WATT ZENER DIODES

(1% TOLERANCE) (DO35 PACKAGE)

NTE Type No.	Diagram Number	Nominal Zener Voltage	Test Current mA	Maximum Junction Temperature
		V_Z @ I_{ZT}	I_{ZT}	°C
5010T1	68	5.1 ± 1%	5	200
5011T1	68	5.6 ± 1%	5	200
5013T1	68	6.2 ± 1%	5	200
5019T1	68	10 ± 1%	5	200
5021T1	68	12 ± 1%	5	200

DIMENSIONAL OUTLINE DRAWINGS

Diagram 59

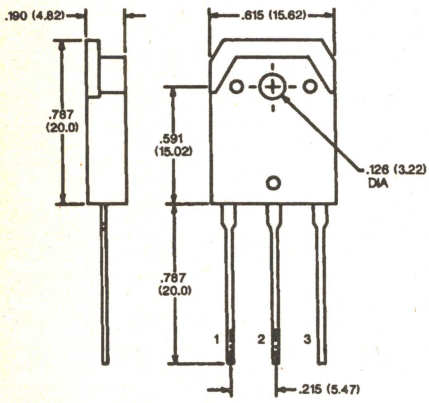

	1	2	3	CASE
d	A	K	A	K

TO3P

Diagram 64

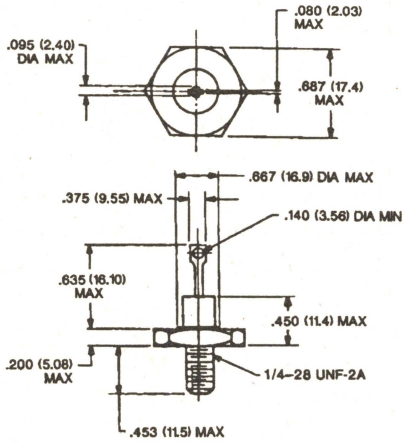

DO5

Diagram 65

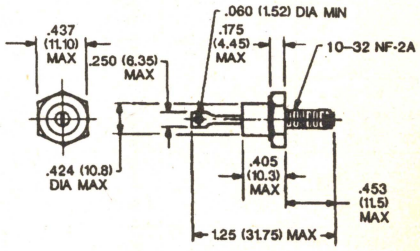

DO4

Diagram 66

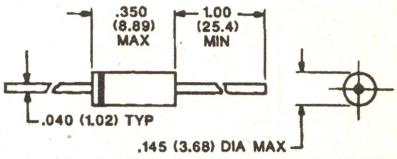

COLOR BAND DENOTES CATHODE

Diagram 67

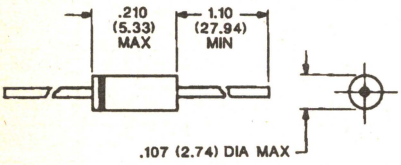

COLOR BAND DENOTES CATHODE

Diagram 68

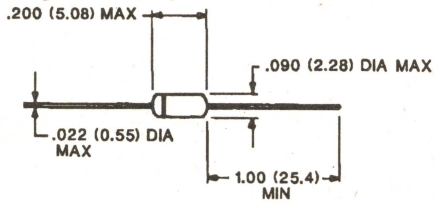

COLOR BAND DENOTES CATHODE

Diagram 91

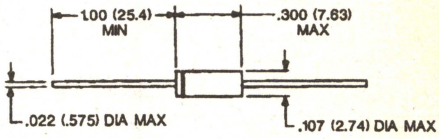

COLOR BAND DENOTES CATHODE

DO7

Diagram 92

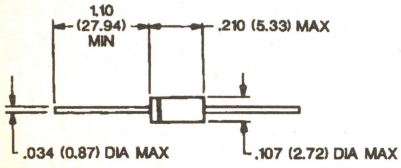

COLOR BAND DENOTES CATHODE

DO41

Diagram 93

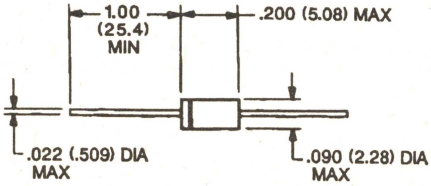

COLOR BAND DENOTES CATHODE

DO35

Diagram 98

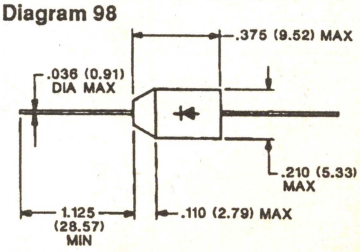

DO27

DIMENSIONAL OUTLINE DRAWINGS

Diagram 99

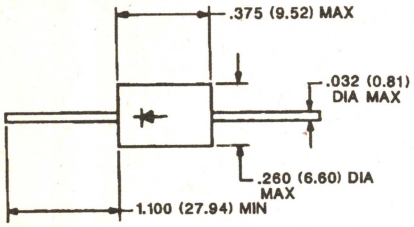

DO26

Diagram 100

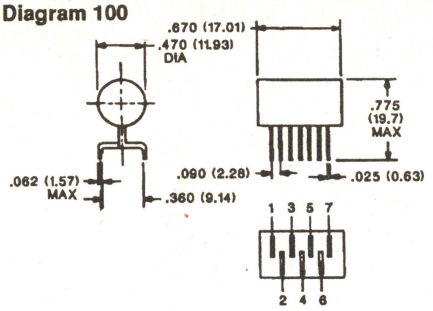

	1	2	3	4	5	6	7
a	A	K	A	K	A	A	K

Diagram 101

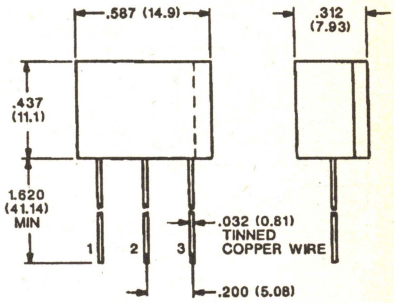

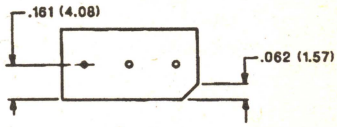

COMMON ANODE

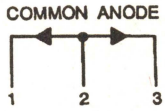

	1	2	3
b	K	A	K

Diagram 104

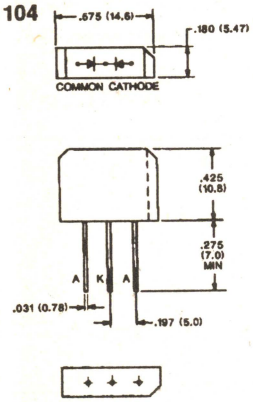

Diagram 105

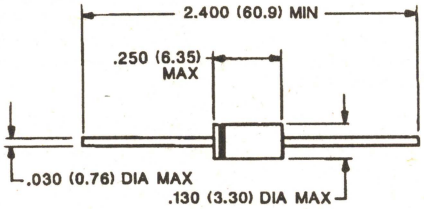

COLOR BAND DENOTES CATHODE

DO15

Diagram 173

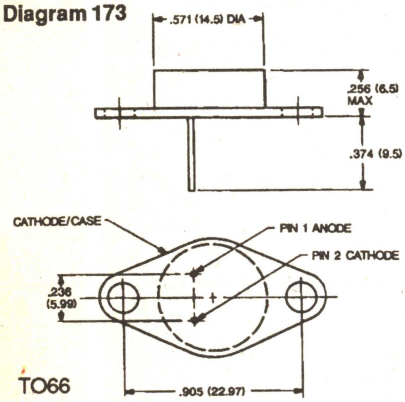

TO66

Diagram 185

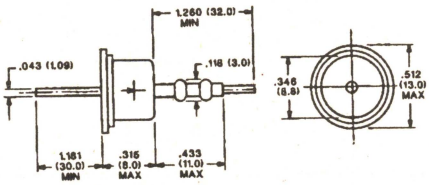

Diagram 190

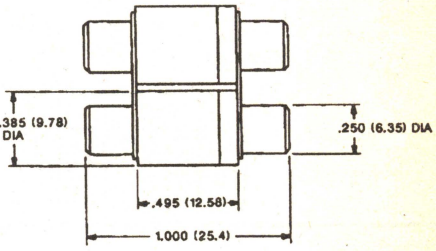

COLOR BAND DENOTES CATHODE

Diagram 380

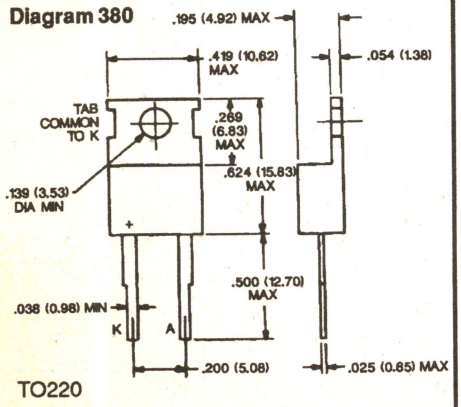

TO220

Diagram 381

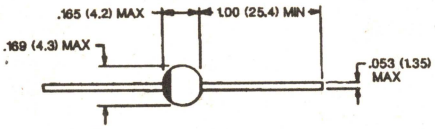

COLOR BAND INDICATES CATHODE

Diagram 392

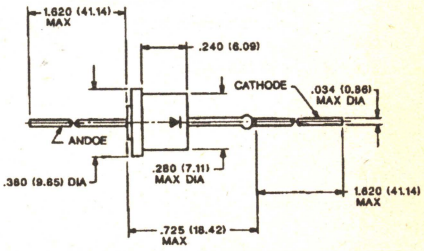

DIMENSIONAL OUTLINE DRAWINGS

Diagram 396

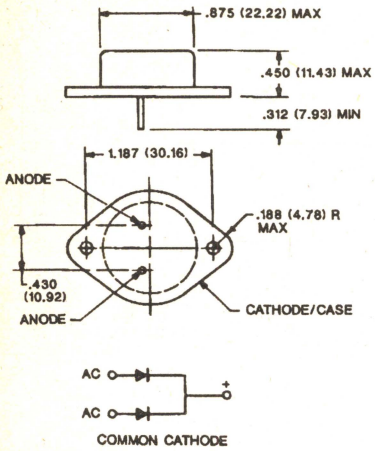

TO3

Diagram 441

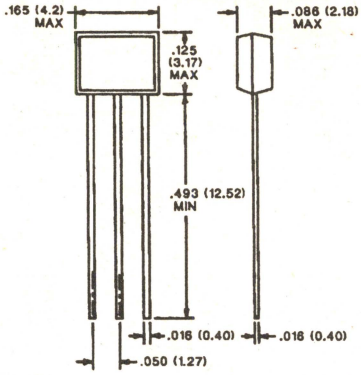

	1	2	3
a	A	K	A
b	K	A	K

Diagram 461

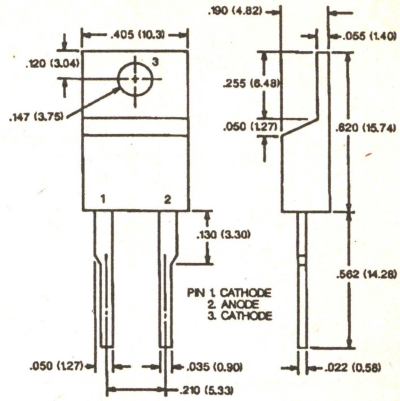

TO220

Diagram 502

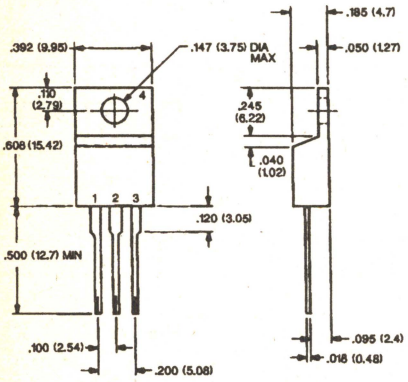

	1	2	3	4
a	A	K	A	K
b	K	A	K	A

TO220

Diagram 503

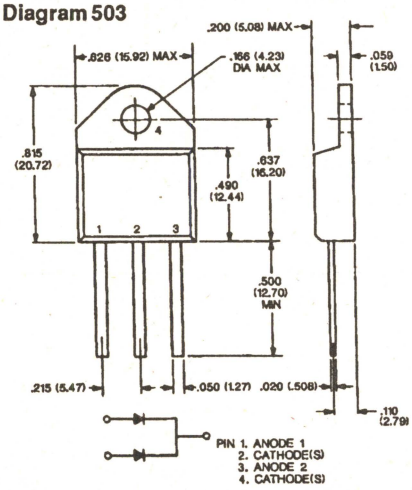

TO218

Diagram 535

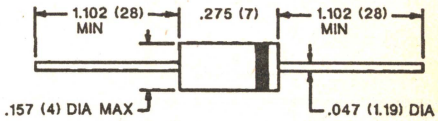

COLOR BAND DENOTES CATHODE

Diagram 541

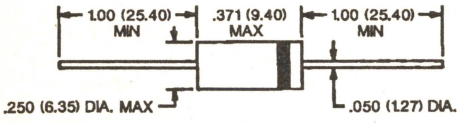

DO27

Diagram 547

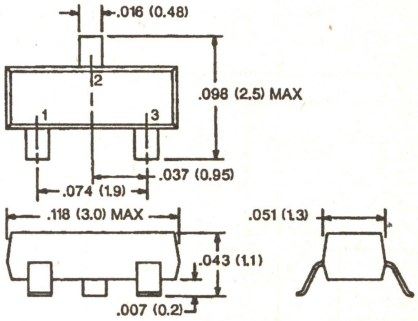

	1	2	3
c	A	A	K
d	NC	A	K
e	K	K	A

SOT–23

HIGH VOLTAGE DIVIDERS/FOCUS ASSEMBLIES

NTE Type No.	Description and Application	Diagram No.
HVD–1	Resistive High Voltage Assembly: 240 Megohms, tapped at 40 Megohms; Total Dissipation – 4 Watts; 35KV Max.	79
HVD–2	Resistive High Voltage Assembly: 300 Megohms, tapped at 50 Megohms; Total Dissipation – 4 Watts; 35KV Max.	79
HVD–3	Resistive High Voltage Assembly: 240 Megohms, tapped at 40 Megohms; Total Dissipation – 4 Watts; 35KV Max.	80
HVD–4	Resistive High Voltage Assembly: 300 Megohms, tapped at 50 Megohms; Total Dissipation – 4 Watts; 35KV Max.	81
HVD–12	Resistive High Voltage Assembly: 300 Megohms, tapped at 50 Megohms; Total Dissipation – 4 Watts; 35KV Max.	82
568	High Voltage Rectifier/Focus Divider Network: 175 Megohms, tapped at 25 Megohms, 35KV Max. p/p	423
568A	High Voltage Rectifier/Focus Divider Network: 175 Megohms, tapped at 25 Megohms, 35KV Max. p/p	514

HIGH VOLTAGE MULTIPLIERS

NTE Type Number	Description	Diagram Number	Circuit Number	Input Peak to Peak (No Load) KV	Maximum Continuous Output (No Load) KV	Output Lead Length In Inches
500A	6–Step Silicon Tripler with Focus Tap	69	C–1	12	30 at 2mA	26 1/2
521	6–Step Silicon Tripler with Focus Tap	71	C–2	12	30 at 2mA	18 1/2
522	6–Step Silicon Tripler with Focus Tap	69	C–3	12	30 at 2mA	27 3/4
523	5–Step Silicon Tripler with Internal Focus Divider Network	70	C–4	12	30 at 2mA	25 1/4
526A	5–Step Silicon Tripler with Internal Focus Divider Network	72	C–5	12	30 at 2mA	25 1/2
528	5–Step Silicon Tripler with Internal Focus Divider Network	62	C–6	12	30 at 2mA	21
529	5–Step Silicon Tripler with Damper Diode and Internal Focus Divider Network	72	C–7	12	30 at 2mA	29 1/2
530	6–Step Silicon Tripler with Internal Focus Divider Network	72	C–8	12	30 at 2mA	29 1/4
531	6–Step Silicon Tripler with Resistor to Focus Tap	73	C–9	12	30 at 2mA	23
532	6–Step Silicon Tripler with Resistor to Focus Tap	73	C–10	12	30 at 2mA	23
533	5–Step Silicon Tripler with Damper Diode and Resistor to Focus Tap	73	C–11	12	30 at 2mA	25
534	5–Step Silicon Tripler with Damper Diode	74	C–12	12	30 at 2mA	26 3/4
535	5–Step Silicon Tripler with Damper Diode and Bleeder Resistor	75	C–13	12	30 at 2mA	29 1/2
536A	8–Step Silicon Quadrupler with Focus Tap	76	C–14	8	30 at 2mA	11 1/2
537	5–Step Silicon Tripler with Damper Diode and Resistor to Focus Tap	73	C–15	12	30 at 2mA	23 3/4
538	5–Step Silicon Tripler with Damper Diode and Focus Tap	77	C–16	12	30 at 2mA	20 3/4
539	5–Step Silicon Tripler with Damper Diode and Focus Tap	78	C–17	12	30 at 2mA	20
549	5–Step Tripotential Tripler with Damper Diode	534	C–22	12	30 at 2mA	18 1/2
556	5–Step Silicon Tripler with Damper Diode and Internal Focus Divider Network	72	C–18	12	30 at 2mA	26
557	5–Step Silicon Tripler with Damper Diode and Internal Focus Divider Network	72	C–19	12	30 at 2mA	26
559	5–Step Tripotential Tripler	534	C–21	12	28 at 2mA	22
565	5–Step Silicon Tripler with Damper Diode and Bleeder Resistor	180	C–20	12	30 at 2mA	25 1/2

See Diagrams, beginning on Page 1–60

HIGH VOLTAGE MULTIPLIERS

NTE500A
CIR–C1

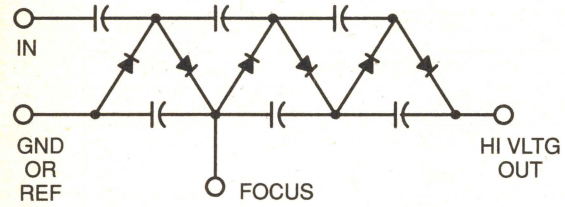

NTE521
CIR–C2

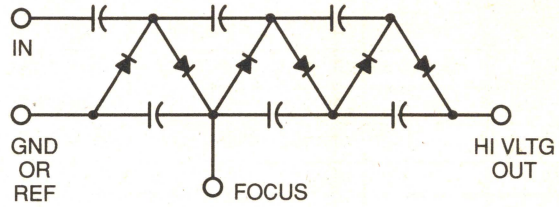

NTE522
CIR–C3

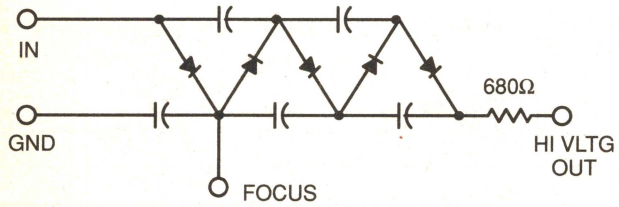

NTE523
CIR–C4

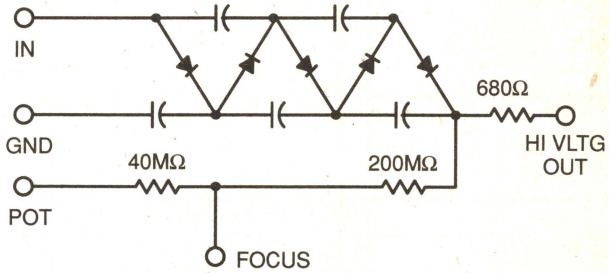

NTE526A
CIR–C5

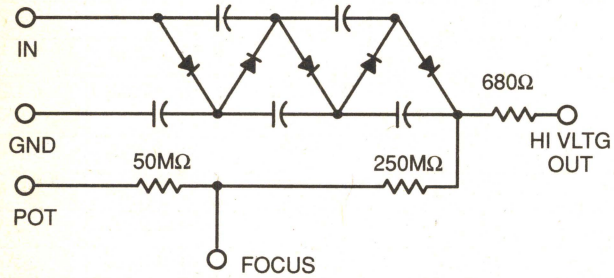

NTE528
CIR–C6

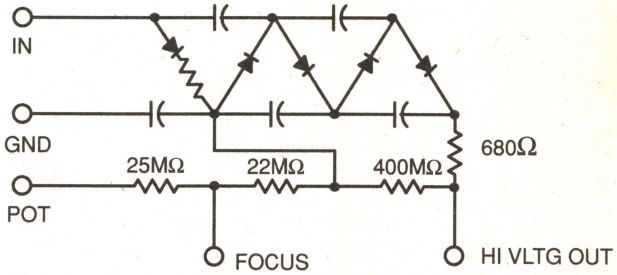

NTE529
CIR–C7

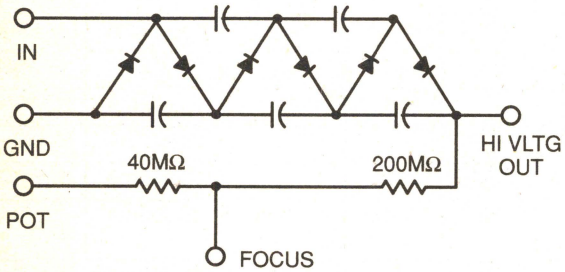

NTE530
CIR–C8

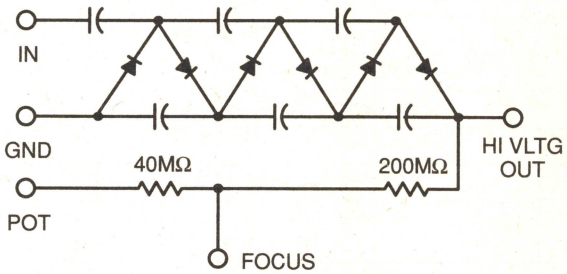

NTE531
CIR–C9

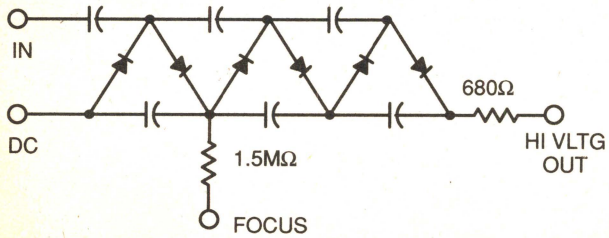

NTE532
CIR–C10

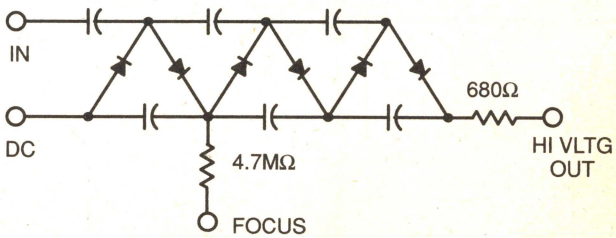

NTE533
CIR–C11

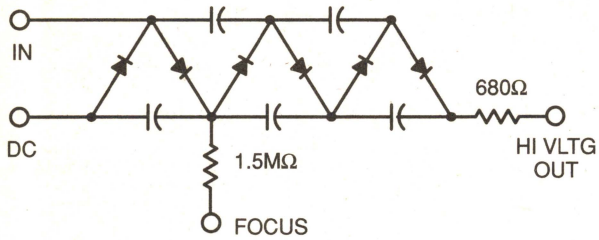

NTE534
CIR–C12

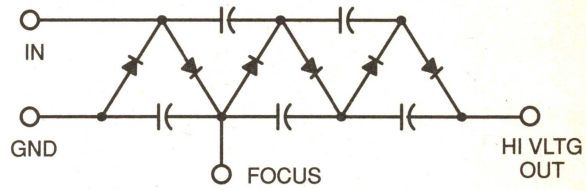

NTE535
CIR–C13

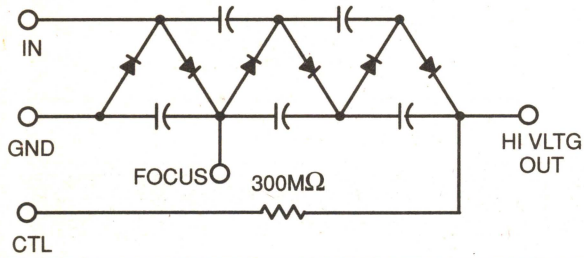

NTE536A
CIR–C14

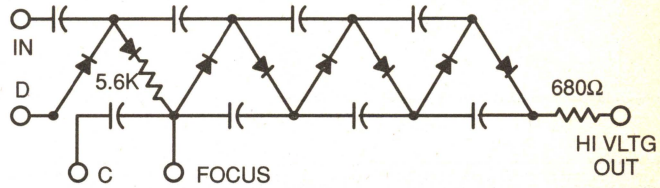

NTE537
CIR–C15

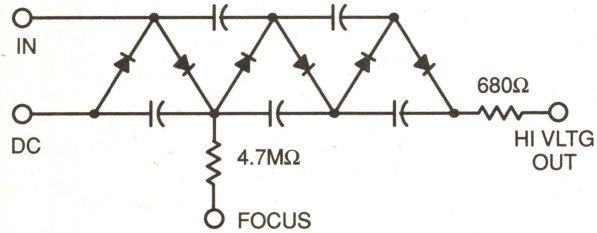

NTE538
CIR–C16

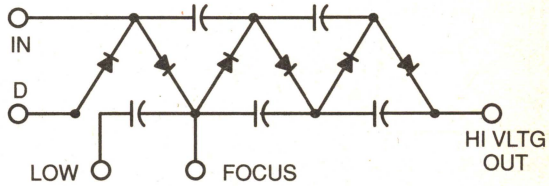

NTE539
CIR–C17

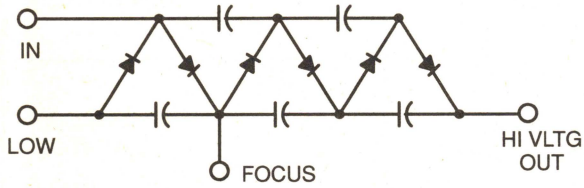

NTE556
CIR–C18

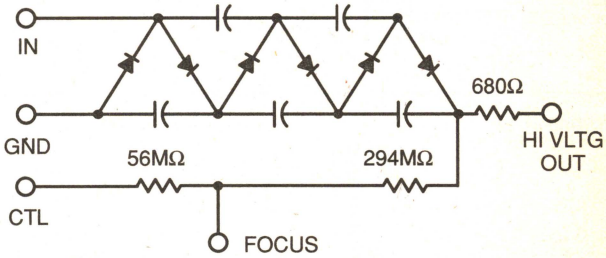

NTE557
CIR–C19

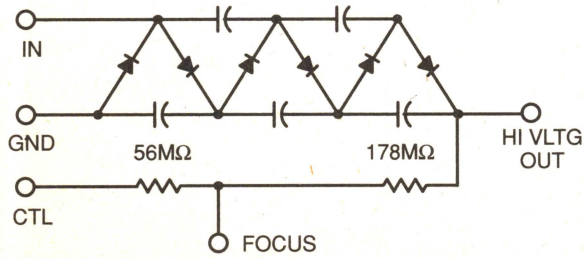

NTE565
CIR–C20

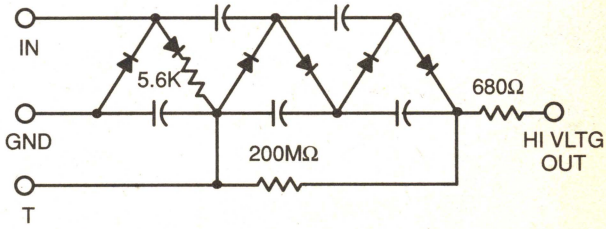

HIGH VOLTAGE MULTIPLIERS

NTE559
CIR–C21

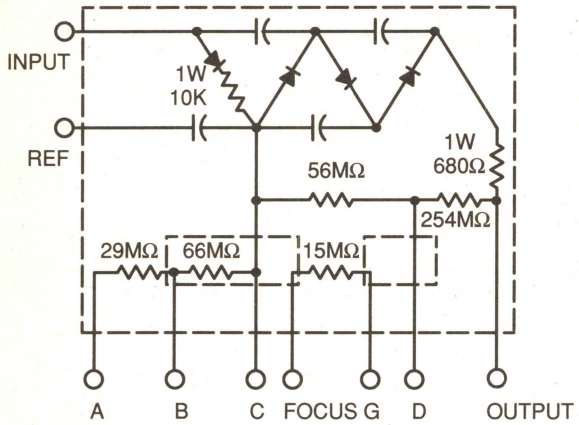

NTE549
CIR–C22

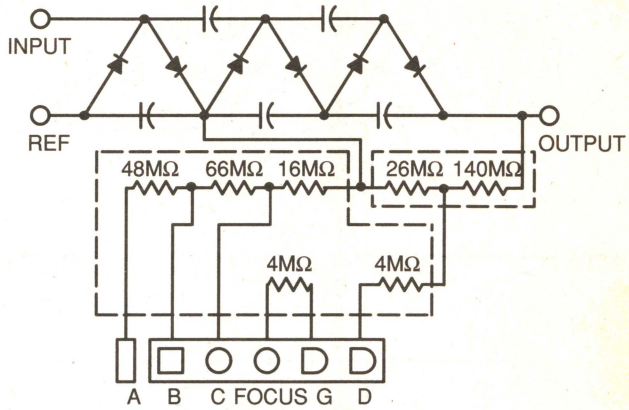

DIMENSIONAL OUTLINE DRAWINGS

Diagram 62

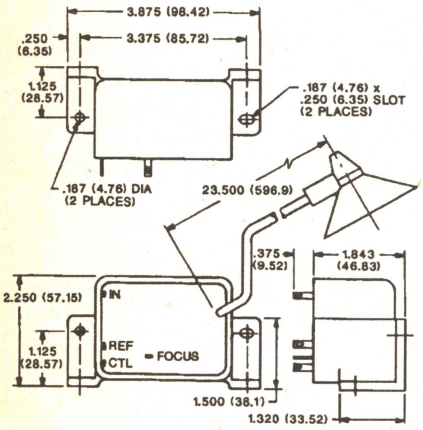

Diagram 69

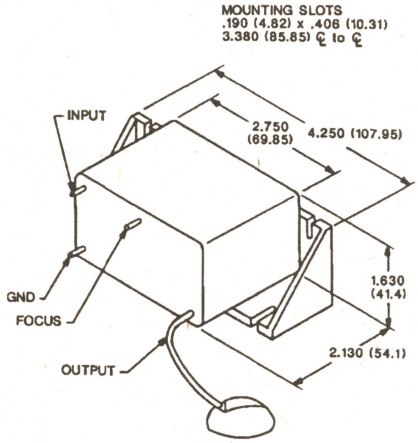

Diagram 70

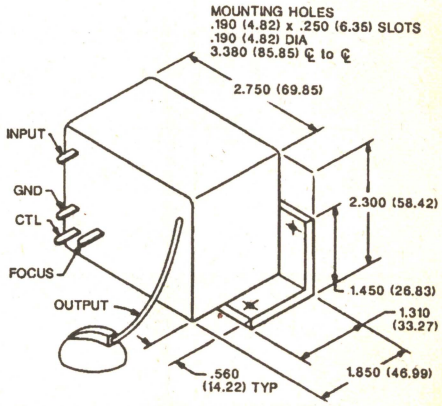

Diagram 71

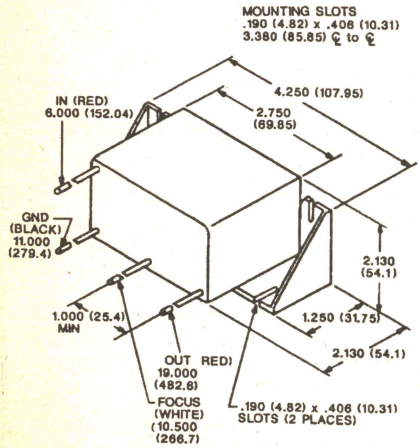

Diagram 72

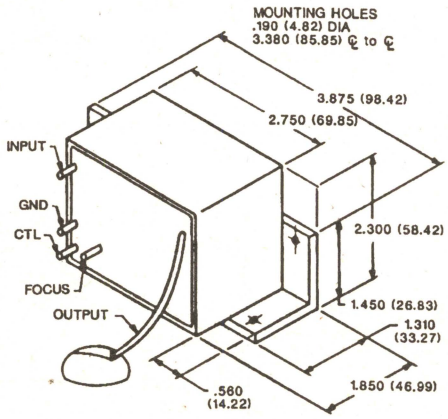

Diagram 73

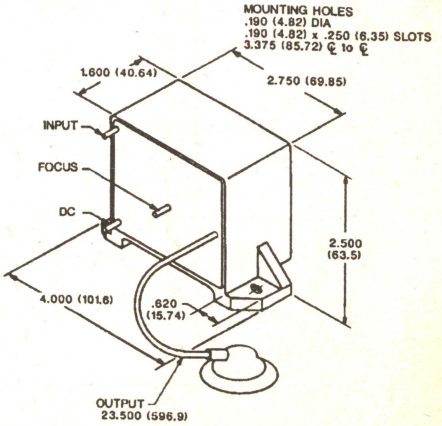

DIMENSIONAL OUTLINE DRAWINGS

Diagram 74

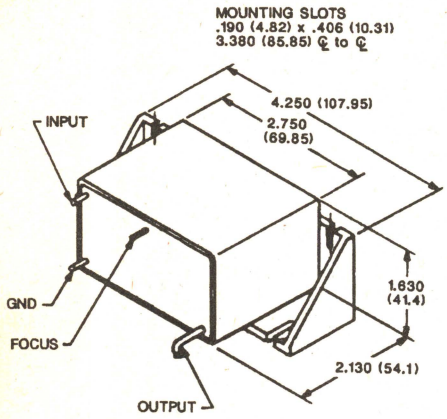

Diagram 75

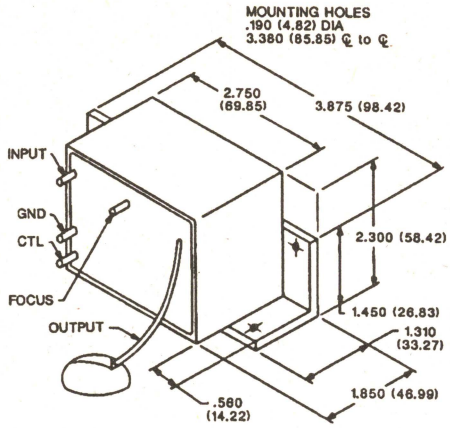

Diagram 76

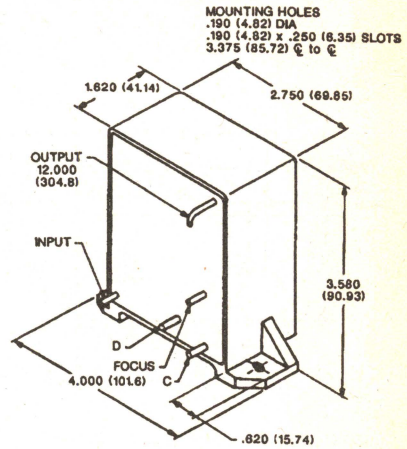

Diagram 77

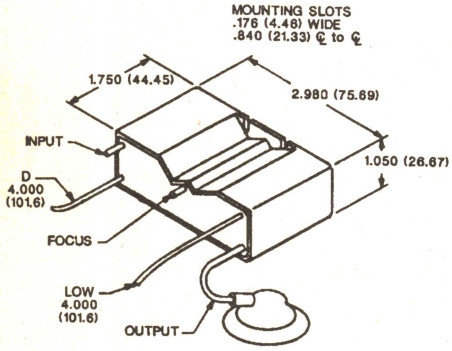

Diagram 78

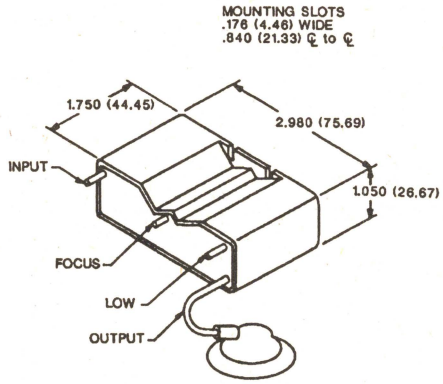

Diagram 79

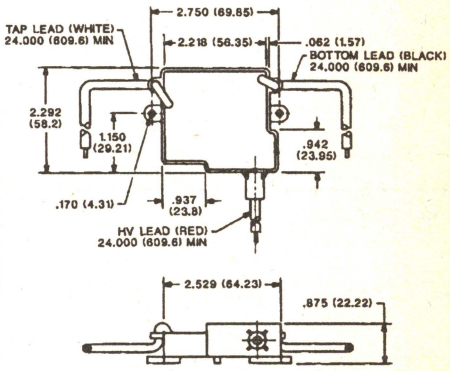

Diagram 80

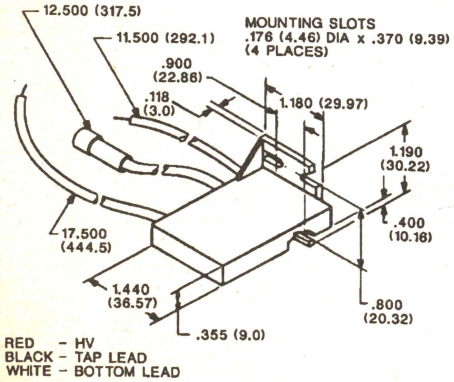

Diagram 81

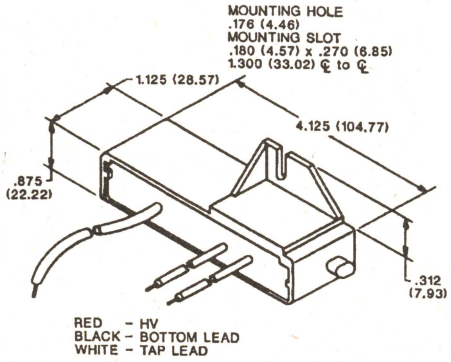

Diagram 82

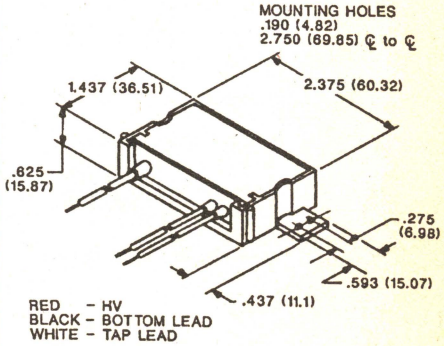

DIMENSIONAL OUTLINE DRAWINGS

Diagram 180

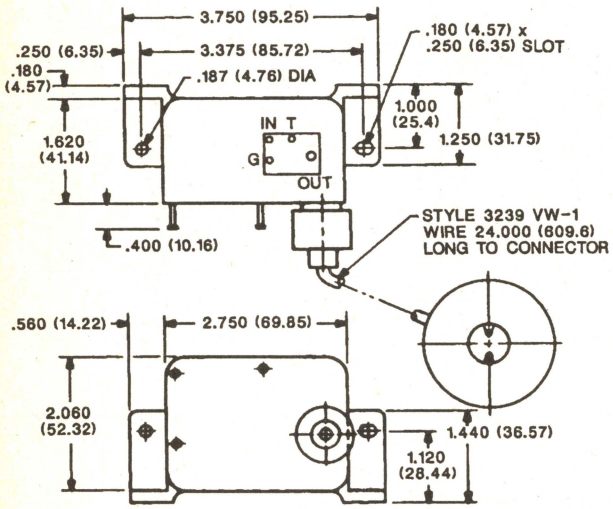

Diagram 423

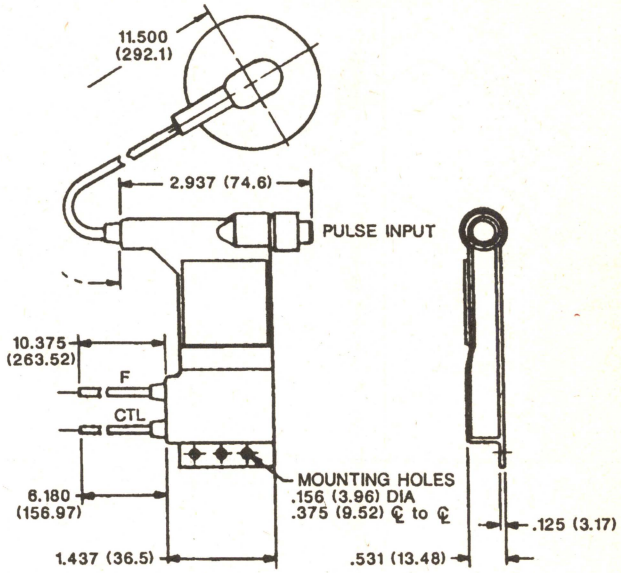

Diagram 514

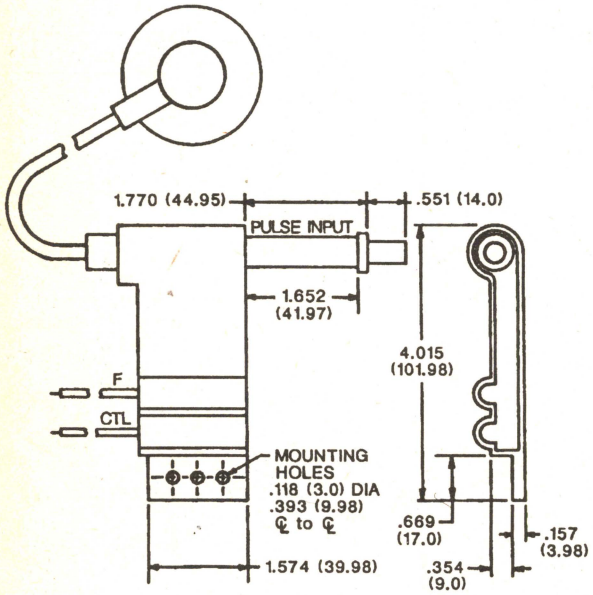

Diagram 534

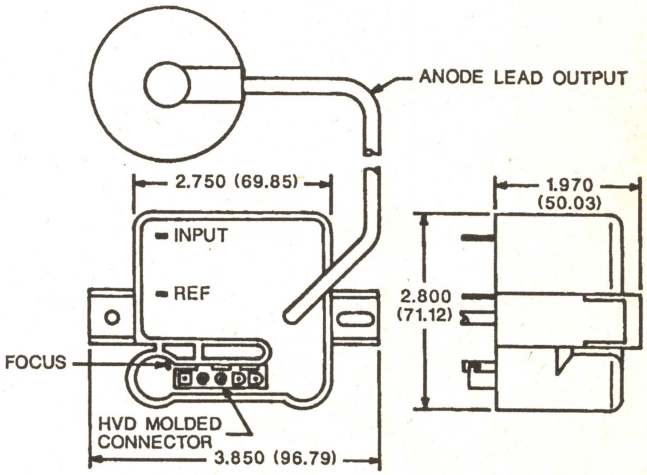

HIGH VOLTAGE SILICON RECTIFIERS

(FOR TELEVISION APPLICATIONS)

NTE Type No.	Diagram Number	Peak Reverse Voltage	Peak Repetitive Forward Current mA	Average Forward Current mA	Forward Voltage Drop	Maximum One Half Cycle Surge
		P_{RV}	I_{FRM}	I_F	V_F	I_{FM} (Surge)
513	191	45kV	200	5	75V @ 50mA	–
518	49	10kV	–	25	18V @ 25mA	3A
527A	57	35kV	–	2.2	60V @ 10mA	100mA

HIGH VOLTAGE SELENIUM RECTIFIERS

(FOR TELEVISION APPLICATIONS)

NTE Type No.	Diagram Number	Maximum Values		Operating Conditions		
		No–Load D.C. Voltage	Peak Pulse Voltage	Nominal D.C. Voltage	Nominal Peak Pulse Voltage	Nominal Forward Current µA
118	186	7,500	8,400	6,500	8,000	200
503	187	14,300	17,000	13,000	15,500	200
504	188	19,800	23,000	18,000	21,500	200
505	189	22,000	26,000	20,000	24,000	200

SILICON HIGH VOLTAGE RECTIFIERS

(FOR INDUSTRIAL AND MICROWAVE OVENS)

NTE Type No.	Diagram Number	P_{RV} Minimum Avalanche Voltage	Maximum Average Rectified Current mA	Maximum Forward Peak Surge Current 1 – 60Hz	Maximum Forward Voltage Drop @ I_F	Maximum Reverse Leakage Current µA
		V_{PK}	I_O	I_{FM} (Surge)	V_{FM}	I_{RM}
541	83	10kV @ 1mA	750 @ T_A = 40°C	50	8.5V @ 750mA	10 @ 5kV
542	84	16kV @ 10µA	350 @ T_A = 50°C	50	14V @ 350mA	5 @ 16kV
546	85	12kV @ 100µA	400 @ T_C = 55°C	25	–	1 @ 5kV
548	86	12kV @ 100µA	750 @ T_C = 60°C	250	14V @ 750mA	5 @ 12kV

HV SOLID STATE TUBE REPLACEMENTS

(FOR VACUUM RECTIFIER TUBES)

NTE Type No.	Diagram Number	Replaces The Following Tube Types:	Peak Inverse Voltage	Forward Voltage Drop @ I_F	Average Forward Current mA	Peak Repetitive Forward Current mA
			P_{RV}	V_F	I_F	I_{FRM}
508	87	3A3, 3AW3, 3B2, 3CA3, 3CN3, 3CU3, 3CZ3, 2CN3, 1B3, 1G3, 1K3, 1J3	45,000	50V @ 5mA	5	110
509	87	3AT2, 3AW2, 3BL2, 3BM2, 3BN2	45,000	50V @ 5mA	5	110
510	87	3CY3, 3DB3, 3DJ3, 3DC3	45,000	50V @ 5mA	5	110
511	89	2AV2, 2BA2, 1V2	9,000	20V @ 5mA	5	110
512	90	6BA3, 6BS3, 6CH3, 6CJ3, 6CK3, 6CL3, 6CM3, 6DW3	6,000	10V @ 350mA	250	1300
514	87	3DR3, 3DS3	45,000	50V @ 5mA	5	110

See Diagrams, beginning on Page 1–64

DIMENSIONAL OUTLINE DRAWINGS

Diagram 49

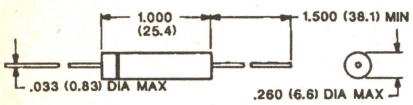

COLOR BAND DENOTES CATHODE

Diagram 57

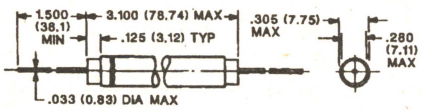

COLOR BAND DENOTES CATHODE

Diagram 83

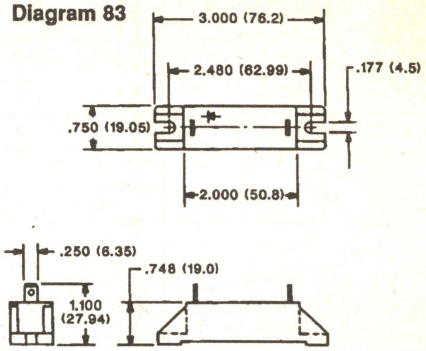

Diagram 84

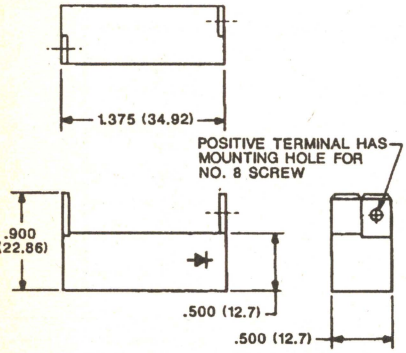

Diagram 85

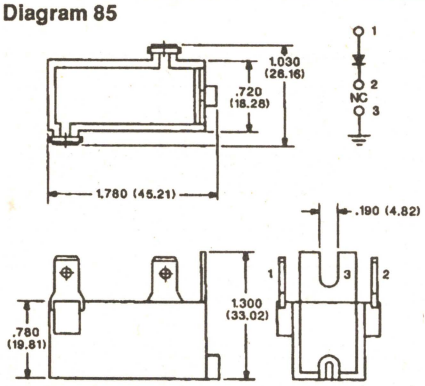

Diagram 86

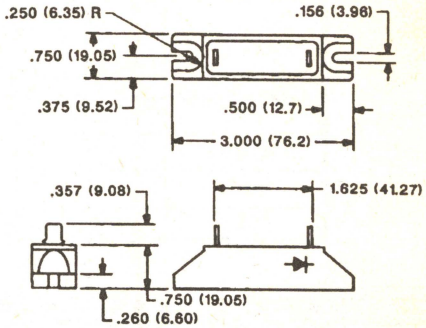

Diagram 87

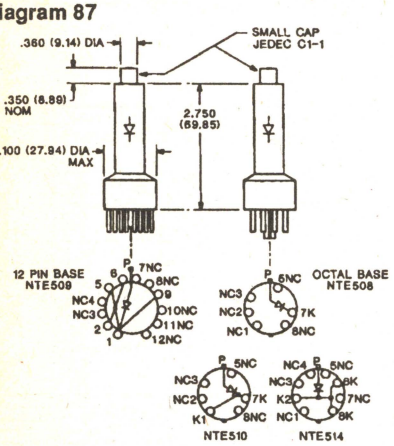

Diagram 89

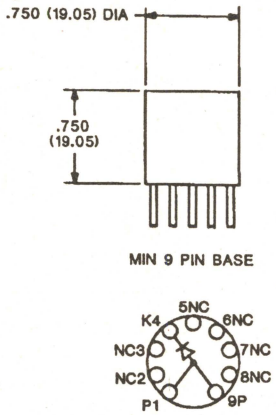

Diagram 90

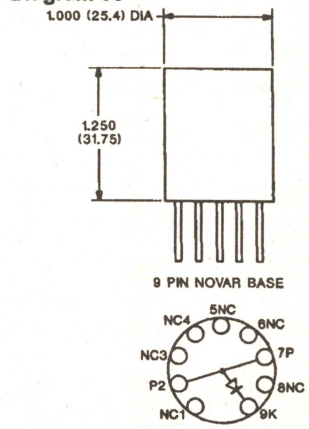

Diagram 186

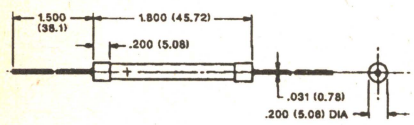

(+) DENOTES CATHODE

Diagram 188

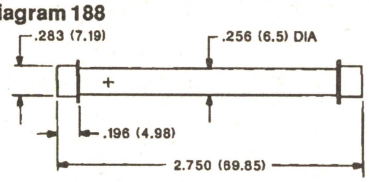

(+) DENOTES CATHODE

Diagram 191

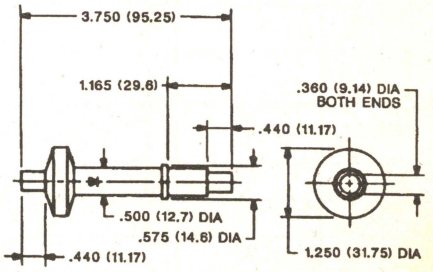

Diagram 187

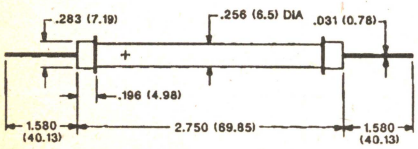

(+) DENOTES CATHODE

Diagram 189

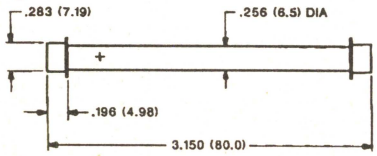

(+) DENOTES CATHODE

SINGLE PHASE BRIDGE RECTIFIERS

Peak Repetitive Reverse Voltage	I_F Averaged Rectified Forward Current Maximum Average Rectified Current @ Half – Wave Resistive Load 60Hz											
P_{RV}	1A	1.5A	2A	4A	4A	6A	8A	25A	25A	40A	80A	100A
100			NTE166				NTE5312					
200			NTE167	NTE5309	NTE5318	NTE5329	NTE5313	NTE5322	NTE5322W	NTE5340		
400		NTE5304	NTE168				NTE5314	NTE5324	NTE5324W			
600	NTE5332	NTE5305	NTE169	NTE5310	NTE5319	NTE5330	NTE5315	NTE5326	NTE5326W	NTE5342	NTE5346	NTE5348
800		NTE5306					NTE5316	NTE5327	NTE5327W			
1000	NTE5334	NTE5307	NTE170	NTE5311	NTE5320	NTE5331	NTE5317	NTE5328	NTE5328W	NTE5344		
I_{FSM} (Amp)	25	50	60	200	200	200	200	300	300	300	1000	1000
V_F @ I_F	1.2V @ 1A	1V @ 1A	1V @ 1A	1V @ 3A	1V @ 3A	1V @ 3A	1.1V @ 4A	1.2V @ 12.5A	1.2V @ 12.5A	1.2V @ 20A	1.3V @ 80A	1.3V @ 100A
Max T_A @ I_F (°C)	+40	+30	+55	+50	+50	+50	+55	+55	+55	+55	+150	+150
Diag. No.	**106**	**94**	**96**	**415**	**554**	**439**	**107**	**95** Note 1	**440**	**108** Note 1	**421** Note 2	**421** Note 2

Note 1 Provided with 4–Way terminals (Quick–connect, wrap–around, solder, or P.C. board mount).
Note 2 Screw–terminals

3–PHASE BRIDGE RECTIFIERS

NTE Type No.	Material and Application	Diagram No.	Maximum Peak Reverse Voltage	Maximum Average Forward Current Amps	Maximum Peak Surge Forward Current Amps	Maximum Forward Voltage Drop	Maximum Ambient Temperature °C
			P_{RV}	I_F	I_{FSM}	V_F @ I_F	T_A @ I_F
5335	Silicon, 3–Phase	473	600	60	1000	1.25V @ 100A	+100
5338	Silicon, 3–Phase	473	600	100	2000	1.40V @ 200A	+100

Note 3 All 3–Phase Bridge Rectifiers have Screw–mount terminals.

See Diagrams, beginning on Page 1–69

INDUSTRIAL RECTIFIERS

P_{RV} Volts	Maximum Average Rectified Forward Current I_F In Amperes									
	3A		6A		12A	15A	16A	20A	25A	40A
50	NTE5800	NTE5830	NTE5850		NTE5870	NTE5940	NTE5892	NTE5912		NTE5980
50		NTE5831*	NTE5851*		NTE5871*	NTE5941*	NTE5893*	NTE5913*		NTE5981*
100	NTE5801	NTE5832	NTE5852	NTE5812	NTE5872	NTE5942	NTE5894	NTE5914		NTE5982
100		NTE5833*	NTE5853*		NTE5873*	NTE5943*	NTE5895*	NTE5915*		NTE5983*
200	NTE5802	NTE5834	NTE5854		NTE5874	NTE5944	NTE5896	NTE5916		NTE5986
200		NTE5835*	NTE5855*		NTE5875*	NTE5945*	NTE5897*	NTE5917*		NTE5987*
300	NTE5803	NTE5836	NTE5856		NTE5876	NTE5946	NTE5898	NTE5918		NTE5988
300		NTE5837*	NTE5857*		NTE5877*	NTE5947*	NTE5899*	NTE5919*		NTE5989*
400	NTE5804	NTE5838	NTE5858	NTE5814	NTE5878	NTE5948	NTE5900	NTE5920	NTE5962	NTE5990
400		NTE5839*	NTE5859*		NTE5879*	NTE5949*	NTE5901*	NTE5921*	NTE5963*	NTE5991*
500	NTE5805	NTE5840	NTE5860		NTE5880	NTE5950	NTE5902	NTE5922		NTE5992
500		NTE5841*	NTE5861*		NTE5881*	NTE5951*	NTE5903*	NTE5923*		NTE5993*
600	NTE5806	NTE5842	NTE5862	NTE5815	NTE5882	NTE5952	NTE5904	NTE5924		NTE5994
600		NTE5843*	NTE5863*		NTE5883*	NTE5953*	NTE5905*	NTE5925*		NTE5995*
800	NTE5808	NTE5846	NTE5866		NTE5886		NTE5908	NTE5928	NTE5966	NTE5998
800		NTE5847*	NTE5867*		NTE5887*		NTE5909*	NTE5929*	NTE5967*	NTE5999*
1000	NTE5809	NTE5848	NTE5868	NTE5817	NTE5890		NTE5910	NTE5932		NTE6002
1000		NTE5849*	NTE5869*		NTE5891*		NTE5911*	NTE5933*		NTE6003*
I_{FSM}	200A	40A	150A	400A	250A	250A	300A	400A	300A	500A
V_F @ I_F	1.2V Max 0.9V Typ	1.1V Max 0.9V Typ	1.2V Max 0.9V Typ	0.9V Max 0.8V Typ	1.2V Max 1V Typ	1.5V Max 1.1V Typ	1.2V Max 0.9V Typ	1.5V Max 1.1V Typ	1.7V Max 1V Typ	1.2V Max 1V Typ
Max T_C @ I_F (°C)	+105 (T_L)	+150	+150	+60	+150	+150	+150	+150	+100	+150
Diag. No.	541	65	65	351	65	64	65	65	121	64
Mounting Torque in•lb (m•N)	–	20 (2.22)	20 (2.22)	–	20 (2.22)	30 (3.33)	20 (2.22)	20 (2.22)	–	30 (3.33)
Thread Size	–	10–32 NF–2A	10–32 NF–2A	–	10–32 NF–2A	1/4–28 UNF–2A	10–32 NF–2A	10–32 NF–2A	–	1/4–28 UNF–2A
Case Style	DO27	DO4	DO4	Axial Lead	DO4	DO5	DO4	DO4	Press Fit	DO5

NOTE: Cathode to case is standard polarity.
* Indicates anode to case polarity.

See Diagrams, beginning on Page 1–69

P_{RV} Volts	Maximum Average Rectified Forward Current I_F In Amperes										
	50A	60A	70A	85A	150A	300A	450A	500A	550A	1200A	2200A
50		NTE6020	NTE6048								
50		NTE6021*	NTE6049*								
100		NTE6022	NTE6050								
100		NTE6023*	NTE6051*								
200		NTE6026	NTE6054	NTE6074							
200		NTE6027*	NTE6055*	NTE6075*							
300		NTE6030	NTE6058								
300		NTE6031*	NTE6059*								
400	NTE5826	NTE6034	NTE6060		NTE6154	NTE6354					
400	NTE5827*	NTE6035*	NTE6061*		NTE6155*	NTE6355*					
500		NTE6038									
500		NTE6039*									
600		NTE6040	NTE6064	NTE6076	NTE6156	NTE6356		NTE6110	NTE6102		NTE6116
600		NTE6041*	NTE6065*	NTE6077*	NTE6157*	NTE6357*			NTE6103*	NTE6113	
800	NTE5828	NTE6042	NTE6068								
800	NTE5829*	NTE6043*	NTE6069*								
1000		NTE6044	NTE6072		NTE6158	NTE6358					
1000		NTE6045*	NTE6073*		NTE6159*	NTE6359*					
1200				NTE6078				NTE6112	NTE6104	NTE6115	NTE6118
1200				NTE6079*					NTE6105*		
1400					NTE6162	NTE6362					
1400					NTE6163*	NTE6363*					
1600							NTE6106				
1600							NTE6107*				
I_{FSM}	600A	700A	1200A	1500A	2100A	5000A	8500A	6500A	10,000A	12,500A	30,000A
V_F @ I_F	1V Max 0.95V Typ	1.4V Max 1V Typ	1.27V Max 0.95V Typ	1.45V Max 1.1V Typ	1.2V Max 1V Typ	1.4V Max 1.2V Typ	1.6V Max	–	1.2V Max	1.2V Max	1.1V Max
Max T_C @ I_F (°C)	+150	+150	+150	+120	+130	+130	+120	–	+125	+105	+130
Diag. No.	120	64	64	64	122	123	390	389	390	388	387
Mounting Torque in•lb (m•N)	–	30 (3.33)	30 (3.33)	30 (3.33)	120 (13.35)	360 (40.06)	360 (40.06)	–	360 (40.06)	–	–
Thread Size	–	1/4–28 UNF–2A	1/4–28 UNF–2A	1/4–28 UNF–2A	3/8–24 UNF–2A	3/4–16 UNF–2A	3/4–16 UNF–2A	–	3/4–16 UNF–2A	–	–
Case Style	Press Fit	DO5	DO5	DO5	DO8	DO9	–	Hockey Puck	–	Hockey Puck	Hockey Puck

NOTE: Cathode to case is standard polarity.
* Indicates anode to case polarity.

See Diagrams, beginning on Page 1–69

FAST RECOVERY POWER RECTIFIERS

STUD MOUNTED (200 Nanosecond Reverse Recovery Time)

Peak Reverse Voltage P_{RV}	Average Rectified Forward Current, I_O	
	12 Amps	40 Amps
200	NTE5818	NTE6006
200	NTE5819*	NTE6007*
400	NTE5820	NTE6008
400	NTE5821*	NTE6009*
600	NTE5822	NTE6010
600	NTE5823*	NTE6011*
V_F @ Rated I_O	1.4V Max/1V Typ	1.4V Max/1V Typ
I_{FSM}	200A	350A
T_C @ Rated I_O	100°C	100°C
Mounting Torque in•lb (m•N)	20 (2.22)	30 (3.33)
Case Style/Thread Size	**DO4** (10–32 NF–2A)	**DO5** (1/4–28 UNF–2A)
Diagram Number	**65**	**64**

*Indicates that polarity is anode to case.

SCHOTTKY BARRIER RECTIFIERS

NTE Type Number	Diagram Number	Case Style	Peak Repetitive Reverse Voltage (Volts)	Average Rectified Forward Current (Amps)	Non–Repetitive Peak Surge Current (Surge Applied @ Rated Load Conditions Halfwave, Single Phase, 60Hz)	Maximum Instantaneous Forward Voltage @I_F	Maximum Capacitance @ V_R = 5.0V (P_f)	Peak Operating Junction Temperature (Forward Current Applied) (°C)
			P_{RV}	I_F	I_{FSM} or I_{FM} (Surge)	V_F	C_T	T_J (PK)
578	92	DO41	90	1	25	0.6V @ 1A	–	–
579	541	DO27	90	3	80	0.74V @ 3A	–	–
583	93	DO35	70	0.015	0.05	0.41V @ 0.001A	2	200
584	93	DO35	20	0.035	0.1	0.41V @ 0.001A	1.2	200
585	92	DO41	40	1	25	0.6V @ 1A	110*	125
586	541	DO27	40	3	80	0.525V @ 1A	260	150
6084	65	DO4 Cathode Case	45	35	600	0.55V @ T_C = 125°C	2000	150
6085	502a	TO220	45	15	150	0.84V @ 15A	–	150
6087	502a	TO220	45	30	150	0.82V @ 30A	–	150
6090	503/59d	TO218/TO3P	45	30	400	0.76V @ 30A	–	150
6094	64	DO5 Cathode Case	45	60	800	0.6V @ T_C = 125°C	4000	150

*Measured at 1MHz and applied reverse voltage of 4.0V.

See Diagrams, beginning on Page 1–69

DIMENSIONAL OUTLINE DRAWINGS

Diagram 59

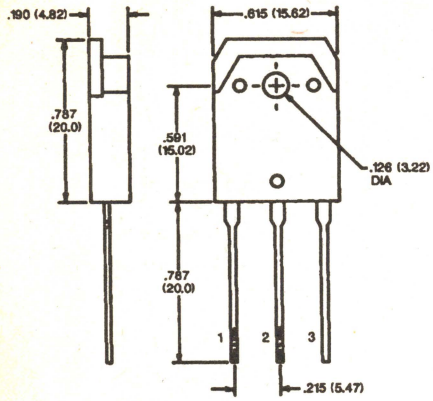

TO3P

	1	2	3	CASE
d	A	K	A	K

Diagram 64

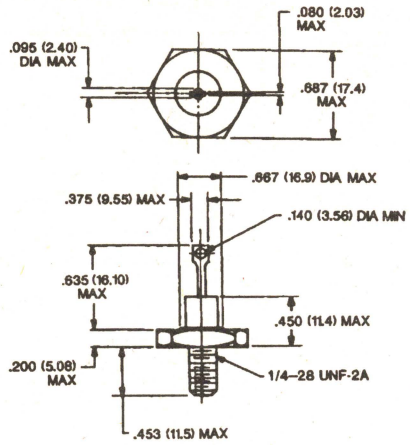

DO5

Diagram 65

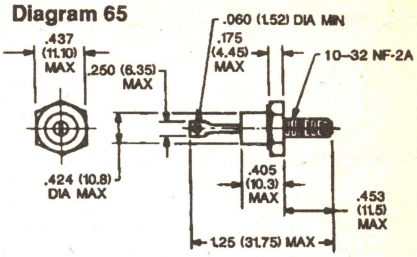

DO4

Diagram 92

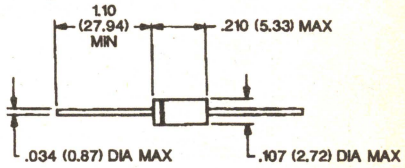

COLOR BAND DENOTES CATHODE

DO41

Diagram 93

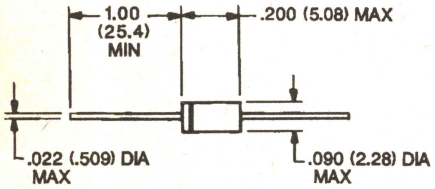

COLOR BAND DENOTES CATHODE

DO35

Diagram 94

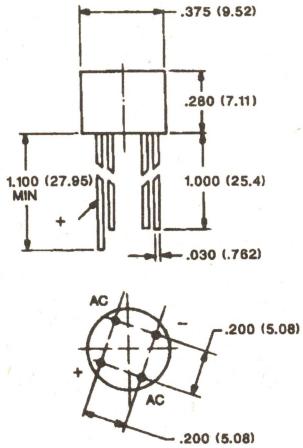

C207

Diagram 95

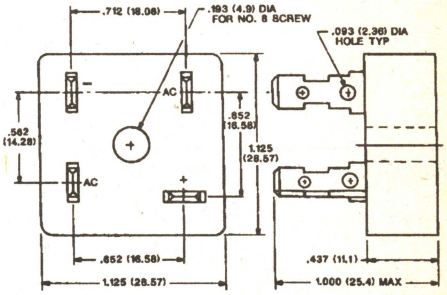

Diagram 96

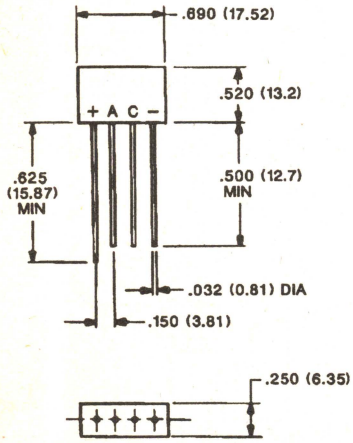

C222

Diagram 106

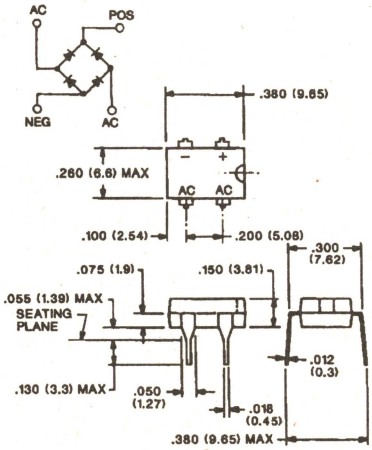

Diagram 107

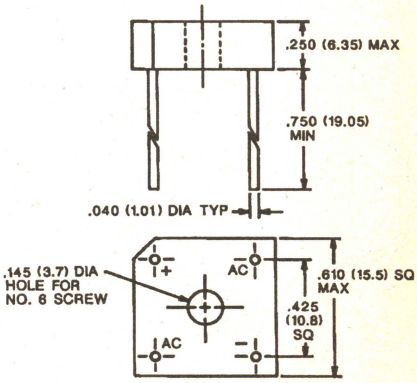

DIMENSIONAL OUTLINE DRAWINGS

Diagram 108

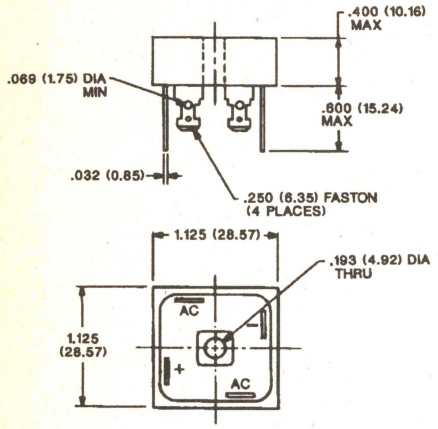

Diagram 120

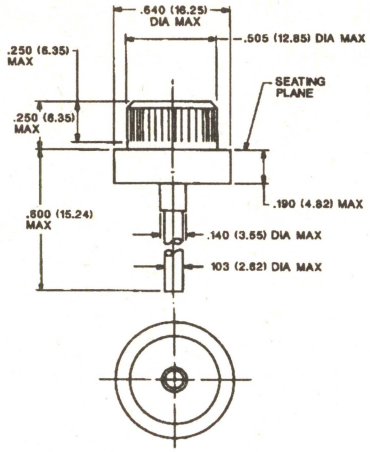

PRESS FIT

Diagram 121

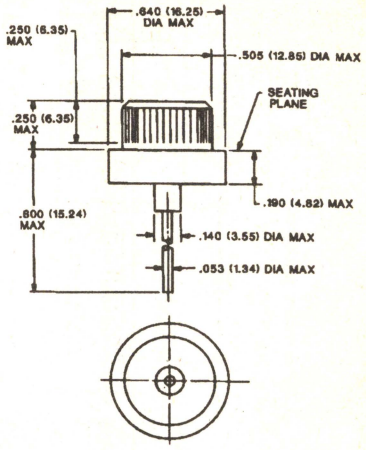

PRESS FIT

Diagram 122

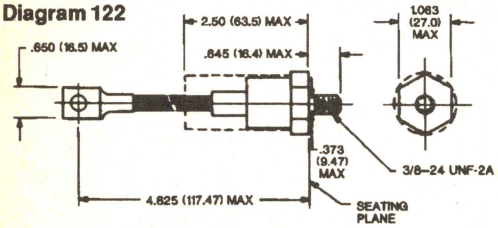

DO8

Diagram 123

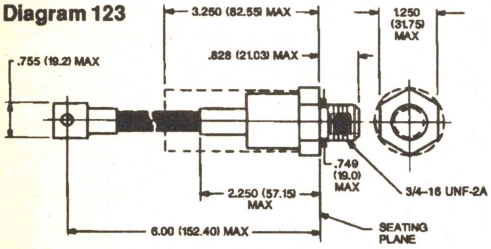

DO9

Diagram 351

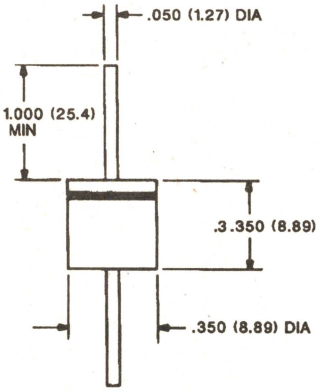

Diagram 387

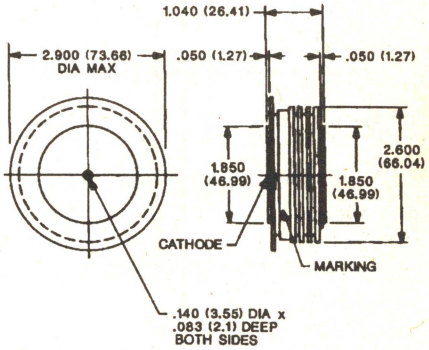

Diagram 388

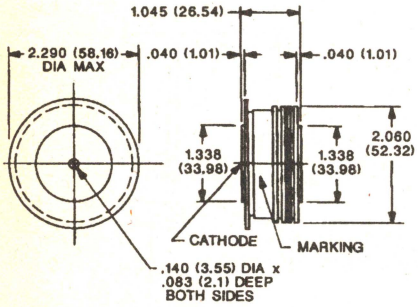

Diagram 389

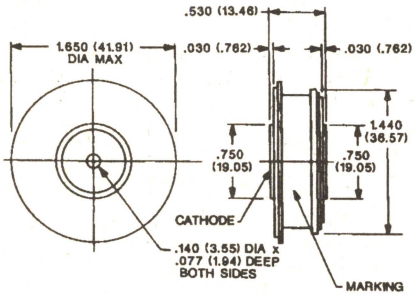

Diagram 390

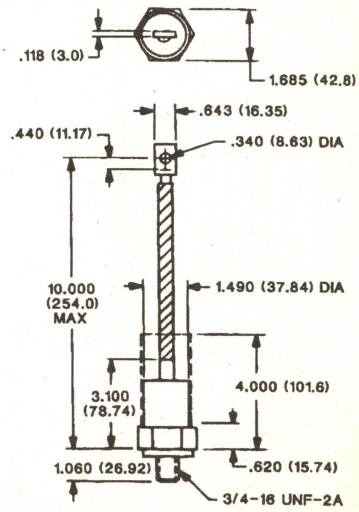

DIMENSIONAL OUTLINE DRAWINGS

Diagram 415

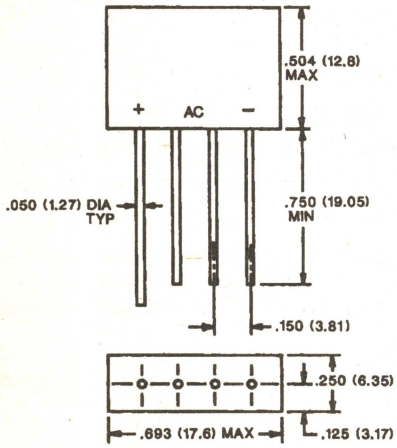

Diagram 421

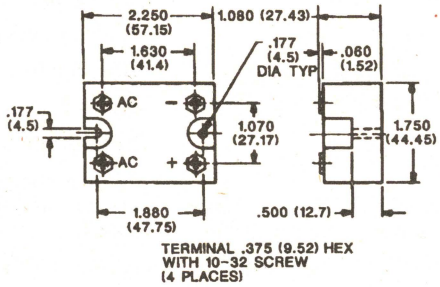

Diagram 439

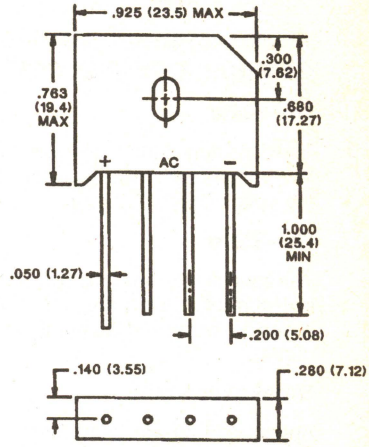

Diagram 440

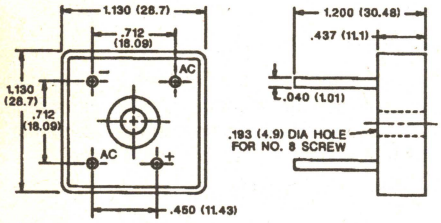

Diagram 473

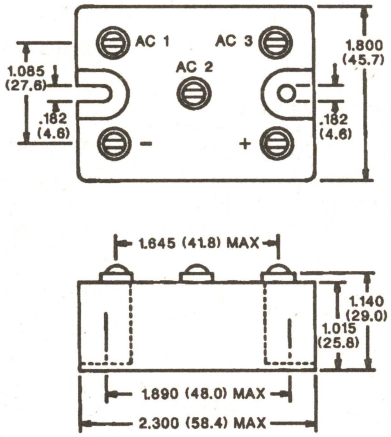

Diagram 502

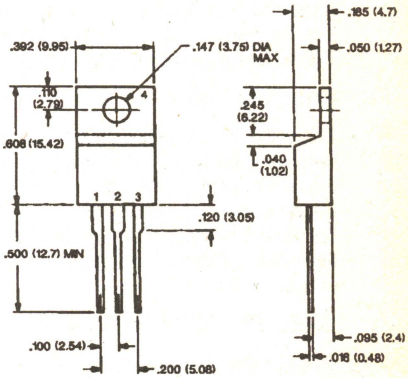

	1	2	3	4
a	A	K	A	K
b	K	A	K	A

TO220

Diagram 503

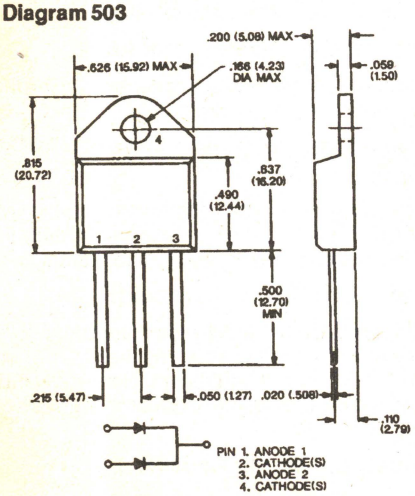

TO218

Diagram 541

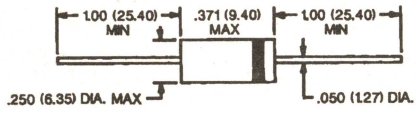

DO27

Diagram 554

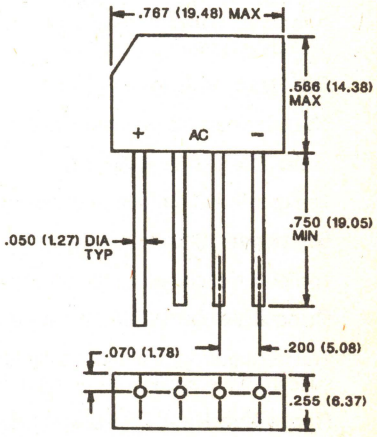

THYRISTORS

NTE's thyristor family consists of several different device types. The most widely used of this family are Silicon Controlled Rectifiers (SCR's), TRIAC's, and DIAC's.

The following glossary represents the most widely used thyristor terms and definitions:

GENERAL TERMINOLOGY

On–State

The condition of the thyristor corresponding to the low–resistance, low–voltage portion of the principal voltage–current characteristic in the switching quadrant(s).

Off–State

The condition of the thyristor corresponding to the high–resistance, low–current portion of the principal voltage–current characteristic between the origin and the break–over point(s) in the switching quadrant(s).

Breakover Point

Any point on the principal voltage–current characteristic for which the differential resistance is zero and where the principal voltage reaches a maximum value.

Principal Current

A generic term for the current through the collector junction. Note: It is the current through main terminal 1 and main terminal 2 of a TRIAC of anode and cathode of an SCR.

Principal Voltage

The voltage between the main terminals. Note: (1) In the case of reverse blocking thyristors, the principal voltage is called positive when the anode potential is higher than the cathode potential, and called negative when the anode potential is lower than the cathode potential. (2) For bidirectional thyristors, the principal voltage is called positive when the potential of main terminal 2 is higher than the potential of main terminal 1.

SPECIFIC TERMINOLOGY

Breakover Voltage ($V_{(BO)}$)

The principal voltage at the breakover point

Repetitive Peak Off–State Voltage (V_{DRM})

The maximum instantaneous value of the off–state voltage which occurs across a thyristor, including all repetitive transient voltages, but excluding all non–repetitive transient voltages.

Repetitive Peak Reverse Voltage of an SCR (V_{RRM})

The maximum instantaneous value of the reverse voltage which occurs across a thyristor, including all repetitive transient voltages, but excluding all non–repetitive transient voltages.

On–State Voltage (V_T)

The principal voltage when the thyristor is in the on–state.

Gate Trigger Voltage (V_{GT})

The gate voltage required to produce the gate trigger current.

Breakover Current ($I_{(BO)}$)

The principal current at the breakover point.

Repetitive Peak Off–State Current (I_{DRM})

The maximum instantaneous value of the off–state current that results from the application of repetitive peak off–state voltage.

Repetitive Peak Reverse Current of an SCR (I_{RRM})

The maximum instantaneous value of the reverse current that results from the application of repetitive peak reverse voltage.

On–State Current (I_T)

The principal current when the thyristor is in the on–state.

Surge (Non–Repetitive) On–State Current (I_{TSM})

An on–state current of short–time duration and specified waveshape.

Latching Current (I_L)

The minimum principal current required to maintain the thyristor in the on–state immediately after switching from the off–state to the on–state has occurred and the triggering signal has been removed.

Holding Current (I_H)

The minimum principal current required to maintain the thyristor in the on–state.

Gate Trigger Current (I_{GT})

The minimum gate current required to switch a thyristor from the off–state to the on–state.

Peak Gate Power Dissipation (P_{GM})

The maximum power which may be dissipated between the gate and main terminal 1 (or Cathode) for a specified time duration.

Average Gate Power Dissipation ($P_{G(AV)}$)

The value of gate power which may be dissipated between the gate and main terminal 1 (or cathode) averaged over a full cycle.

Gate–Controlled Turn–On Time (t_{gt})

The time interval between a specified point at the beginning of the gate pulse and the instant when the principal voltage (current) has dropped (risen) to a specific low (high) value during switching of a thyristor from the off–state to the on–state by a gate pulse.

Circuit–Commutated Turn–Off Time (t_q)

The time interval between the instant when the principal current has decreased to zero after external switching of the principal voltage circuit, and the instant when the thyristor is capable of supporting a specified principal voltage without turning on.

Critical Rate of Rise of Off–State Voltage (Critical or Static dv/dt)

The minimum value of the rate of rise of the principal voltage which will cause switching from the off–state to the on–state.

Critical Rate of Rise of On–State Current (di/dt)

The maximum value of the rate of rise of on–state current which a thyristor can withstand without deleterious effect.

Critical Rate of Rise of Commutation Voltage of a TRIAC (Commutating dv/dt)

The minimum value of the rate of rise of principal voltage which will cause switching from the off–state to the on–state immediately following on–state current conduction in the opposite quadrant.

Thermal Resistance, Junction to Ambient ($R_{\theta JA}$)

The temperature difference between the thyristor junction and the ambient divided by the power dissipation causing the temperature difference under conditions of thermal equilibrium. Note: Ambient is defined as the point where the temperature does not change as a result of the dissipation.

Thermal Resistance, Junction to Case ($R_{\theta JC}$)

The temperature difference between the thyristor junction and the thyristor case divided by the power dissipation causing the temperature difference under conditions of thermal equilibrium.

SILICON CONTROLLED RECTIFIERS (SCR)

(FOR PHASE CONTROL APPLICATIONS)

DC or Pk Volts	$I_{T(RMS)}$ Maximum Forward Current Amps (All Conducting Angles)										
V_{DRM}	0.8A Sensitive Gate	3A Sensitive Gate	4A Sensitive Gate		5A		7A	8A Sensitive Gate		8A	10A
25										NTE5480	
30	NTE5400		NTE5411	NTE5452							
50				NTE5453	NTE5470			NTE5442		NTE5481	NTE5461
60	NTE5401		NTE5412								
100	NTE5402		NTE5413	NTE5454	NTE5471					NTE5482	NTE5462
150	NTE5403										
200	NTE5404	NTE5408	NTE5414	NTE5455	NTE5472	NTE5511	NTE5427	NTE5444		NTE5483	NTE5463
250											
300				NTE5456	NTE5473					NTE5484	
400	NTE5405	NTE5409	NTE5415	NTE5457	NTE5474	NTE5512	NTE5428	NTE5446	NTE5437	NTE5485	NTE5465
500					NTE5475					NTE5486	
600	NTE5406	NTE5410	NTE5416	NTE5458	NTE5476	NTE5513	NTE5429	NTE5448	NTE5438	NTE5487	NTE5466
700											
800											NTE5468
1200											
I_{GT} Max*	200µA#	10mA	200µA#	200µA#	10mA	15mA	25mA	30mA	200µA#	30mA	15mA
V_{GT} Max (V)	0.8	1.5	1.0	1.5	1.5	2.0	1.5	1.5	0.08	1.5	1.5
I_{Hold} Max (mA)	5	20	5	3	25	20	50	40	3	30	20
V_F(on) (V)	1.7	1.6	2.0	2.2	2.0	2.8	2.6	1.5	1.6	2.0	2.0
I_{Surge} (A)	20	30	25	20	100	60	100	80	100	100	100
V_{GFM} (V)	8	10	6	6	6	10	–	10	6	10	6
V_{GRM} (V)	8	10	6	6	6	5	–	10	6	10	6
Diag. No.	9m	25c	7c	10f	110b	6b	25c	33b	11e	110b	11e
Mounting Torque in•lb (m•N)	–	–	–	–	20 (2.22)	–	–	–	–	20 (2.22)	–
Thread Size	–	–	–	–	10–32 UNF–2A	–	–	–	–	10–32 UNF–2A	–
Case Style	TO92	TO5	TO126	TO202	TO64	TO66	TO5	TO127	TO220	TO64	TO220

Connect a 1KΩ resistor between the gate and cathode.

* I_{GT} (max) is the maximum gate current required to switch a thyristor to the on state. This value is positive for P–Gate and negative for N–Gate thyristors.

See Diagrams, beginning on Page 1–81

SILICON CONTROLLED RECTIFIERS (SCR)

(FOR PHASE CONTROL APPLICATIONS)

DC or Pk Volts	$I_{T(RMS)}$ Maximum Forward Current Amps (All Conducting Angles)										
V_{DRM}	10A Sensitive Gate		10A	12.5A	16A	20A	25A		35A		35A
25					NTE5500		NTE5520				
30											
50					NTE5501		NTE5521	NTE5550	NTE5541		
60											
100			NTE5491		NTE5502		NTE5522		NTE5542		
150					NTE5503		NTE5523				
200	NTE5417		NTE5492		NTE5504	NTE5514	NTE5524	NTE5552	NTE5543	NTE5517	NTE5562
250					NTE5505		NTE5525				
300					NTE5506		NTE5526		NTE5544		
400	NTE5418	NTE5426	NTE5494	NTE314	NTE5507	NTE5515	NTE5527	NTE5554	NTE5545	NTE5518	NTE5564
500					NTE5508		NTE5528		NTE5546		
600	NTE5419		NTE5496		NTE5509	NTE5516	NTE5529	NTE5556	NTE5547	NTE5519	NTE5566
700							NTE5530				
800							NTE5531	NTE5558	NTE5548		
1200											
I_{GT} Max*	15mA	200µA	15mA	40mA	30mA	15mA	40mA	30mA	30mA	30mA	30mA
V_{GT} Max (V)	1.5	0.8	2	2	1.5	2	3	1.5	2	2	2
I_{Hold} Max (mA)	30	3	20	50	40	20	50	40	50	50	50
V_F(on) (V)	1.6	1.6	2.5	1.8	1.6	2.4	2	1.6	1.6	1.6	1.6
I_{Surge} (A)	100	100	100	200	150	200	150	300	300	300	300
V_{GFM} (V)	–	–	10	–	10	10	10	–	10	10	10
V_{GRM} (V)	–	–	10	–	5	5	5	–	10	10	10
Diag. No.	11d	11d	111b	118	111b	112	111b	11e	111b	111b	113a
Mounting Torque in•lb (m•N)	–	–	30 (3.33)	–	30 (3.33)	–	30 (3.33)	–	30 (3.33)	30 (3.33)	30 (3.33)
Thread Size	–	–	1/4–28 UNF–2A	–	1/4–28 UNF–2A	–	1/4–28 UNF–2A	–	1/4–28 UNF–2A	1/4–28 UNF–2A	1/4–28 UNF–2A
Case Style	TO220 Isolated	TO220 Isolated	TO48	TO3	TO48	1/2" Press Fit	TO48	TO220	TO48	TO48	TO48 Isol Stud

* I_{GT} (max) is the maximum gate current required to switch a thyristor to the on state.
This value is positive for P–Gate and negative for N–Gate thyristors.

See Diagrams, beginning on Page 1–81

SILICON CONTROLLED RECTIFIERS (SCR)

(FOR PHASE CONTROL APPLICATIONS)

DC or Pk Volts	$I_{T(RMS)}$ Maximum Forward Current Amps (All Conducting Angles)											
V_{DRM}	40A	50A	55A	65A	80A	125A		275A	470A	550A	850A	1800A
200					NTE5567	NTE5570	NTE5575	NTE5580	NTE5590		NTE5594	
250												
300												
400			NTE5539									
500												
600				NTE5534	NTE5568	NTE5572	NTE5577	NTE5582	NTE5591	NTE5587	NTE5595	NTE5598
700												
800	NTE5536	NTE5538	NTE5540									
1200					NTE5569	NTE5574	NTE5579	NTE5584	NTE5592	NTE5589	NTE5596	NTE5599
I_{GT} Max*	50mA	80mA	40mA	25mA	100mA	150mA	150mA	150mA	150mA	150mA	150mA	200mA
V_{GT} Max (V)	1.5	3	1.5	2	2.5	3	3	3	3	3	3	3
I_{Hold} Max (mA)	60	150	60	50	200	–	–	–	–	–	–	–
V_F(on) (V)	1.6	2	1.8	1.8	1.6	1.95	2.2	1.5	1.55	1.4	1.4	1.35
I_{Surge} (A)	400	525	650	700	1255	1800	1600	5500	5500	10,000	10,000	27,000
V_{GFM} (V)	–	15	–	–	20	4	–	4	5	5	5	5
V_{GRM} (V)	–	5	–	–	5	5	5	5	5	5	5	5
Diag. No.	11e	55c	55c	382a	117	114	115	116	347	177	346	404
Mounting Torque in•lb (m•N)	–	–	–	–	30 (3.33)	130 (14.46)	130 (14.46)	360 (40.06)	1400 lbs (6.2 kN)	360 (40.06)	2400 lbs (10.7 kN)	5500 lbs (24.5 kN)
Thread Size	–	–	–	–	1/4–28 UNF–2A	1/2–20 UNF–2A	1/2–20 UNF–2A	3/4–16 UNF–2A	–	3/4–16 UNF–2A	–	–
Case Style	TO220	TO218 Isolated	TO218	TO3 Isolated Square Pack	TO65	TO94	TO83	TO93	Hockey Puck 1.65" Dia	TO118	Hockey Puck 2.3" Dia	Hockey Puck 2.9" Dia

* I_{GT} (max) is the maximum gate current required to switch a thyristor to the on state. This value is positive for P–Gate and negative for N–Gate thyristors.

See Diagrams, beginning on Page 1–81

SILICON CONTROLLED RECTIFIERS (SCR)

(FOR HIGH SPEED SWITCHING)

DC or Pk Volts	$I_{T(RMS)}$ Maximum Forward Current Amps (All Conducting Angles)							
V_{DRM}	5A	35A	125A		275A	400A	475A	700A
800	NTE5351	NTE5360	NTE5368	NTE5371	NTE5374	NTE5380	NTE5377	NTE5386
1200			NTE5369	NTE5372	NTE5375	NTE5381	NTE5378	NTE5387
I_{GT} Max	50mA	180mA	150mA	150mA	150mA	150mA	150mA	150mA
V_{GT} Max (V)	2	3	3	3	3	3	3	3
I_{Hold} Max (mA)	100	150	–	–	–	–	–	–
V_F(on) Max (V)	2.06	2.05	3.2	3.3	1.85	1.85	1.45	1.45
I_{Surge} (A)	90	180	1400	1400	4500	4500	8000	8000
Repetitive di/dt Amps/µs Max	–	–	150	150	300	300	400	400
Non–Repetitive di/dt Amps/µs Max	500	400	800	800	800	800	500	800
dv/dt Volts/µs Max	400 (Typ)	200	200	200	300	300	300	300
Turn–Off t_q µs Max	2.9 (Typ)	10	10	10	10	15	25	25
Diag. No.	6b	111b	115	114	116	347	177	346
Mounting Torque in•lb (m•N)	–	30 (3.33)	130 (14.46)	130 (14.46)	360 (40.06)	1400 lbs (6.2 kN)	360 (40.06)	2400 lbs (10.7 kN)
Thread Size	–	1/4–28 UNF–2A	1/2–20 UNF–2A	1/2–20 UNF–2A	3/4–16 UNF–2A	–	3/4–16 UNF–2A	–
Case Style	TO66	TO48	TO83	TO94	TO93	Hockey Puck 1.65" Dia	TO118	Hockey Puck 2.3" Dia

SILICON CONTROLLED RECTIFIERS (SCR)

(HIGH SPEED SWITCHING APPLICATIONS)

NTE Type Number	Description and Application	Case Style	Diagram Number	Repetitive Peak Forward Off–State Voltage (Volts)	RMS On–State Current (Amps)	Peak Forward Surge Current (Amps)	Maximum Ratings				Typical Reverse Recovery Time (µs)
							Gate Trigger Voltage (Volts)	Gate Trigger Current (mA)	Turn–Off Time (µs)	Holding Current (mA)	
				V_{DRM}	I_TRMS	I_{TSM}	V_{GT}	I_{GT}	t_{off}	I_{HOLD}	t_{rr}
230	Deflection Circuit of TV	TO66	6b	700	8	90	2.0	50	1.8	100	–
231	Deflection Circuit of TV	TO66	6b	600	8	90	2.0	50	3.8	100	–
314	Power Regulating Switch	TO3	118	400	12.5	200	2.0	40	20 Typ	50	5

See Diagrams, beginning on Page 1–81

SILICON GATE CONTROLLED SWITCH

(GATE TURN OFF THYRISTOR)

NTE Type Number	Description and Application	Case Style	Diagram Number	Repetitive Peak Forward Off–State Voltage (Volts)	RMS On–State Current (Amps)	Surge Current (Amps)	Maximum Ratings			Typical Turn–Off Time (μs)
							Gate Trigger Voltage (Volts)	Gate Trigger Current (mA)	Holding Current (mA)	
				V_{DRM}	I_TRMS	I_{SURGE}	V_{GT}	I_{GT}	I_{HOLD}	t_q
5424	High Speed Switch, Power Supply Control Regulator	TO220	11e	400	4.7	55	3	20	135	4

DESCRIPTION:

The NTE5424 is an all–diffused silicon controlled rectifier (reverse–blocking triode thyristor) intended for high speed switching applications such as power inverters, switching regulators, and high current pulse applications. This device features fast turn–off, high dv/dt, and high di/dt characteristics and may be used at frequencies up to 25kH$_Z$.

Features:

- Fast turn–off time (t_q) = 6μs Max.
- High di/dt and dv/dt capabilities
- Shorted–emitter gate–cathode construction (contains an internally diffused resistor between the gate and cathode)
- Low thermal resistance
- Center–gate construction (provides rapid uniform gate–current spreading for faster turn–on with substantially reduced heating effects)

SILICON CONTROLLED RECTIFIERS (SCR)

(FOR TV HORIZONTAL DEFLECTION)

NTE Type Number	Case Style	Diagram Number	Repetitive Peak Forward Off–State Voltage (Volts)	RMS On–State Current (Amps)	Surge Current (Amps)	Maximum Ratings				Typical Turn–Off Time (μs)	Rate of Rise Voltage (V/μs)
						On–State Voltage (Volts)	Gate Trigger Current (mA)	Gate Trigger Voltage (Volts)	Holding Current (mA)		
			V_{DRM}	I_TRMS	I_{SURGE}	V_T	I_{GT}	V_{GT}	I_{HOLD}	t_q	dv/dt
230	TO66	6b	700	8	90	2.16	50	2	100	1.8	400
231	TO66	6b	600	8	90	2.16	50	2	100	–	400

See Diagrams, beginning on Page 1–81

SILICON CONTROLLED RECTIFIERS (SCR)

(TV POWER SUPPLY SWITCHING)

NTE Type No.	Description and Application	Case Style	Diag. No.	Repetitive Peak Forward Off–State Voltage (Volts)	Maximum Ratings					Typical Turn–On Delay Time (mS)	Typical Turn–On Rise Time (mS)	Typical Holding Current (mA)
					On–State Anode Current (Amps)	Surge On–State Current (Amps)	On–State Voltage (Volts)	Gate Trigger Voltage (Volts)	Gate Trigger Current (mA)			
				V_{DRM}	I_T	I_{TSM}	V_T	V_{GT}	I_{GT}	t_d	t_{rr}	I_{HOLD}
276	SCR, Gate Turn Off TV Application	Japanese TO66	119	1250	5	80	5.3	1.5	120	0.2	1.3	300

INTEGRATED THYRISTOR/RECTIFIER (ITR)

NTE Type No.	Description and Application	Case Style	Diag. No.	Maximum Ratings					Typical Turn–Off Time (µs)	Typical Holding Current (mA)
				RMS On–State Current (Amps)	Surge Current (Amps)	Repetitive Peak Forward Off–State Voltage (Volts)	Gate Turn–Off Current (mA)	Gate Turn–Off Voltage (Volts)		
				I_TRMS	I_{TSM}	V_{DRM}	I_{GT}	V_{GT}	t_q	I_{HOLD}
308	TV Horizontal Deflection and Commutating Switch	TO66	6b	8	80	800	50	2	5.1	50
308P	TV Horizontal Deflection and Commutating Switch	TO220	11c	8	80	700	45	4	4.2	–
310	TV Horizontal Deflection and Trace Switch	TO66	6b	8	80	800	50	2	2.9	–
310P	TV Horizontal Deflection and Trace Switch	TO220	11c	8	80	750	40	4	2.4	–

DESCRIPTION:

The NTE308 and NTE310 series integrated thyristor/rectifiers are all–diffused power monolithic circuits that incorporate a silicon controlled rectifier and a silicon rectifier on a common pellet. The NTE308 series types are used as bipolar switches to control horizontal yoke current during the beam trace interval; the NTE310 series types are used as commutating switches to initiate trace–retrace switching.

See Diagrams, beginning on Page 1–81

TRIACS

(LISTED IN ORDER OF I_TRMS)

V_{RRM} DC or Pk Volts	I_TRMS Maximum Forward Current								
	0.8A	2.5A		4A		8A			10A
25				NTE5600					
50				NTE5601					NTE5661
100		NTE5640	NTE5650	NTE5602					
200	NTE5655	NTE5641	NTE5651	NTE5603					
300				NTE5604					
400	NTE5656	NTE5642	NTE5652	NTE5605	NTE5629	NTE5608	NTE5638		
500				NTE5606					
600	NTE5657	NTE5643	NTE5653	NTE5607		NTE5609			
800						NTE5610		NTE5620	
1000									
I_{GT} (mA)*	5 Max	25/40 Max	3 Max	30 Max	3 Max	10 Max	10 Max	50/75 Max	30/40 Max
V_{GT} (V)	2 Max	2.2 Max	2.2 Max	2.5 Max	2 Max	2.5 Max	2 Max	2 Max	2 Max
V_FON (V)	1.5 Max	1.8 Max	2.2 Max	2 Max	1.6 Max	1.5 Max	1.6 Max	2 Max	1.8 Max
I_{Surge} (A)	8 Max	25 Max	25 Max	30 Max	40 Max	80 Max	80 Max	100 Max	100 Max
I_{Hold} (mA)	20 Max	35 Max	5 Max	30 Max	5 Max	15 Max	15 Max	50 Max	30 Max
Firing Quads	All	All	All	I, II	All	All	All	All	All
Diag. No.	9n	25b	25b	7b	10g	11j	11k	491	110a
Package	TO92	TO5	TO5	TO126	TO202	TO220	TO220 Isolated	TO220 Full Pack	TO64**

* I_{GT} (max) is the worst case current required to guarantee turn–on of the device.
** Mounting Torque, in•lb (m•N): TO48 – 30 (3.33); TO64 – 20 (2.22)

V_{RRM} DC or Pk Volts	I_TRMS Maximum Forward Current									
	10A				15A		20A	25A		
25	NTE5611	NTE5621						NTE5680		
50	NTE5612	NTE5622	NTE5631					NTE5681		
100	NTE5613	NTE5623	NTE5632					NTE5682		
200	NTE5614		NTE5633		NTE5673	NTE56004		NTE5683	NTE56019	NTE56015
300	NTE5615		NTE5634					NTE5684		
400			NTE5635		NTE5675	NTE56006		NTE5685	NTE56020	NTE56016
500	NTE5617	NTE5627	NTE5636		NTE5676			NTE5686		
600	NTE5618		NTE5637	NTE5645	NTE5677	NTE56008		NTE5687		NTE56017
800						NTE56010	NTE5671			NTE56018
1000										
I_{GT} (mA)*	50/75 Max	50 Max	50 Max	25/50 Max	50/80 Max	40/75 Max	50/75 Max	75/100 Max	50/75 Max	50/100 Max
V_{GT} (V)	2.5 Max	2 Max	2.5 Max	2.5 Max	2.5 Max	2.5 Max	2.5 Max	2.5 Max	2.5 Max	2.5 Max
V_FON (V)	1.8 Max	1.8 Max	1.65 Max	1.6 Max	2.2 Max	1.6 Max	1.7 Max	1.8 Max	1.8 Max	1.8 Max
I_{Surge} (A)	100 Max	100 Max	100 Max	110 Max	150 Max	150 Max	150 Max	250 Max	200 Max	180 Max
I_{Hold} (mA)	50 Max	50 Max	50 Max	50 Max	60 Max	40 Max	40 Max	80 Max	70 Max	50 Max
Firing Quads	All	I, II	I, II, III	All	All	All	All	All	All	All
Diag. No.	33c	33c	11j	11k	111a	11j	491	111a	11k	11j
Package	TO127	TO127	TO220	TO220 Isolated	TO48** 1/4–28 UNF–2A	TO220	TO220 Full Pack	TO48** 1/4–28 UNF–2A	TO220 Isolated	TO220

* I_{GT} (max) is the worst case current required to guarantee turn–on of the device.
** Mounting Torque, in•lb (m•N): TO48 – 30 (3.33); TO64 – 20 (2.22)

See Diagrams, beginning on Page 1–81

TRIACS

(LISTED IN ORDER OF I_TRMS)

V_{RRM} DC or Pk Volts	I_TRMS Maximum Forward Current								
	25A			40A					45A
25									
50									
100									
200					NTE5693	NTE56022		NTE5688	
300									
400		NTE56014			NTE5695	NTE56024		NTE5689	
500									
600			NTE5672		NTE5697	NTE56026	NTE5679	NTE5690	NTE56033
800	NTE5699			NTE56028					
1000									
I_{GT} (mA)*	50/75 Max	80/100 Max	80/100 Max	50/75 Max	50/80 Max	50/80 Max	100 Max	50/80 Max	50/100 Max
V_{GT} (V)	2.5 Max	2.5 Max	2.5 Max	2 Max	2.5 Max	2.5 Max	2.5 Max	2.5 Max	1.5 Max
V_FON (V)	1.85 Max	1.8 Max	1.8 Max	1.85 Max	2 Max	2 max	1.8 Max	2 Max	1.8 Max
I_{Surge} (A)	250 Max	250 Max	250 Max	350 Max	400 Max	300 Max	300 Max	400 Max	300 Max
I_{Hold} (mA)	50 Max	80 Max	80 Max	75 Max	60 Max	60 Max	100 Max	60 Max	80 Max
Firing Quads	All	All	All	All	All	All	I, II, III	All	All
Diag. No.	491	406	172	11j	111a	113b	178/382b***	397	55b
Package	TO220 Full Pack	TO3 Isolated Flange	TO3 Swedge	TO220	TO48** 1/4–28 UNF–2A	TO40 Isolated Flange	TO3 Square Pack	1/2" Press Fit	TO218

* I_{GT} (max) is the worst case current required to guarantee turn–on of the device.
** Mounting Torque, in•lb (m•N): TO48 – 30 (3.33); TO64 – 20 (2.22)
*** NTE5679 may be received in either package style depending on availability. Consult factory for current stock.

INTERNALLY TRIGGERED TRIACS

NTE Type Number	Case Style	Diagram Number	TRIAC Characteristics					Trigger TRIAC Characteristics			
			Repetitive Peak Blocking Voltage (Volts)	RMS On–State Current (Amps)	Holding Current (mA)	Peak One–Cycle Surge Current (Amps)	Peak On–State Voltage @ I_T(RMS) (Volts)	Breakover Voltage Forward & Reverse (Volts)		Breakover Voltage Symmetry (Volts)	Peak Breakover Corremt (µA)
			V_{DRM}	I_T(RMS)	I_{Hold}			$V_{(BO)}$		$\Delta V_{(BO)}$	$I_{(BO)}$
								MIN	MAX		
5646	TO220 Isolated	11k	600	10	60 Max	120	1.6	30	40	3 Max	200

DESCRIPTION:

The NTE5646 is a TRIAC that includes a DIAC trigger mounted inside the same package. This device saves the user the expense and assembly time of buying a discrete DIAC and assembling in conjunction with a gated TRIAC. The NTE5646 is a bidirectional AC switch and is gate controlled for either polarity of main terminal voltage.

See Diagrams, beginning on Page 1–81

DIMENSIONAL OUTLINE DRAWINGS

Diagram 6

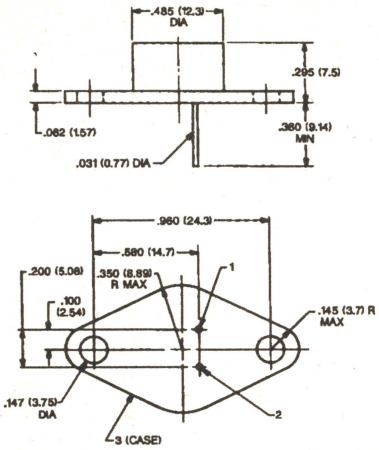

TO66

	1	2	CASE
b	G	K	A

Diagram 7

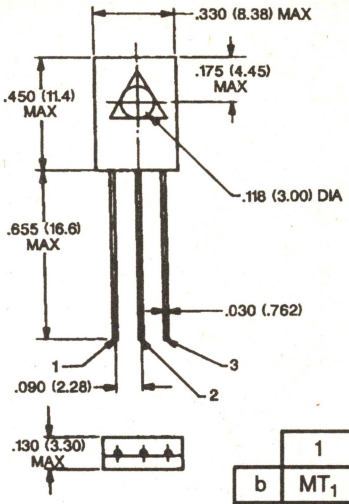

TO126

	1	2	3
b	MT_1	MT_2	Gate
c	K	A	G

Diagram 9

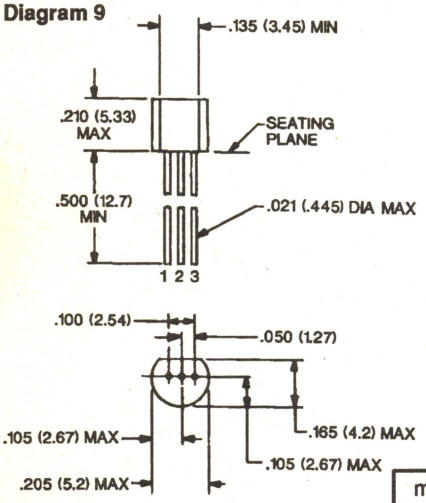

TO92

	1	2	3
m	K	G	A
n	MT_1	Gate	MT_2

Diagram 10

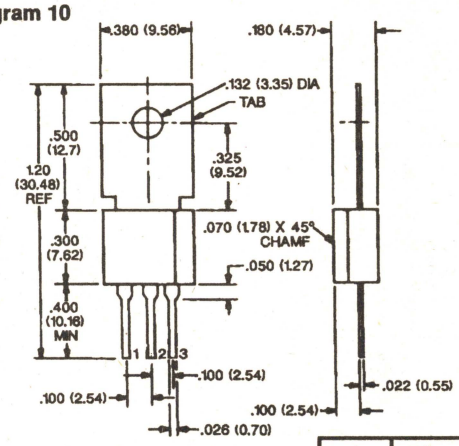

TO202

	1	2	3	TAB
f	K	A	G	A
g	MT_1	MT_2	Gate	MT_2

Diagram 11

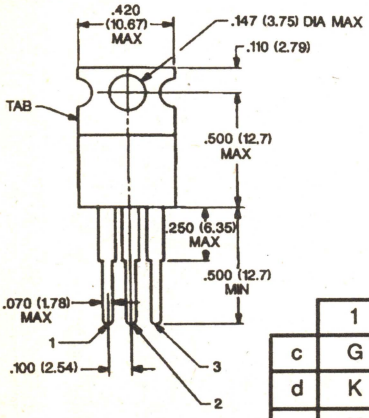

TO220

	1	2	3	TAB
c	G	A	K	A
d	K	A	G	Isol
e	K	A	G	A
j	MT_1	MT_2	Gate	MT_2
k	MT_1	MT_2	Gate	Isol

Diagram 25

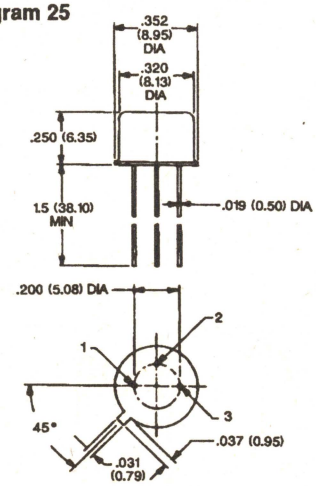

TO5

	1	2	3
b	MT_1	Gate	MT_2
c	K	G	A

DIMENSIONAL OUTLINE DRAWINGS

Diagram 33

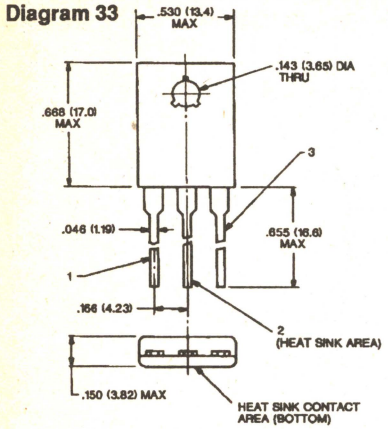

	1	2	3
b	K	A	G
c	MT_1	MT_2	Gate

TO127

Diagram 55

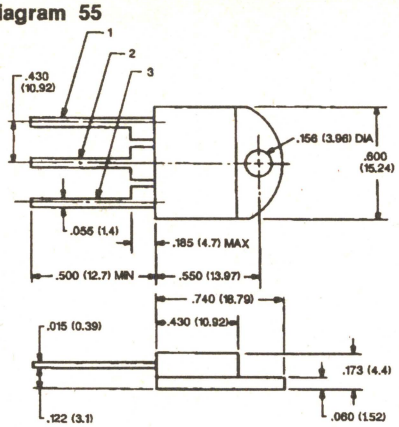

	1	2	3
b	MT_1	MT_2	Gate
c	K	A	G

TO218

Diagram 110

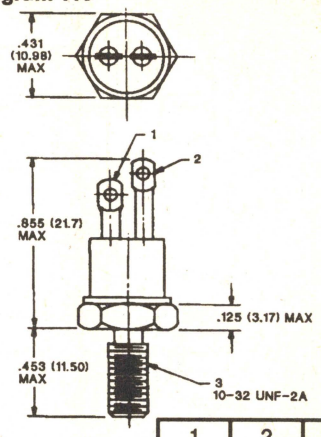

	1	2	3
a	Gate	MT_1	MT_2
b	G	K	A

TO64

Diagram 111

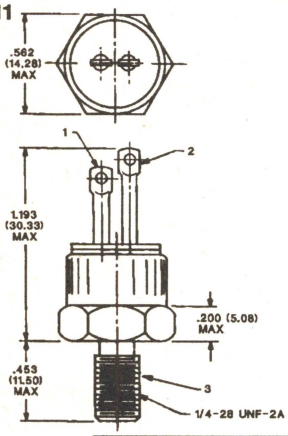

	1	2	3
a	Gate	MT_1	MT_2
b	G	K	A

TO48

Diagram 112

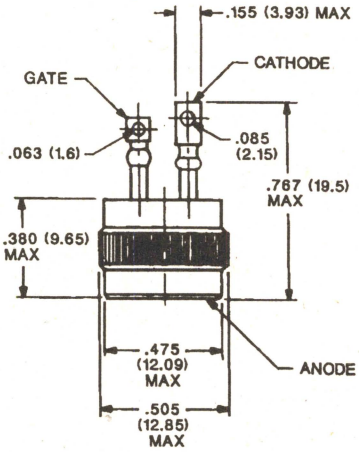

1/2" PRESS FIT

Diagram 113

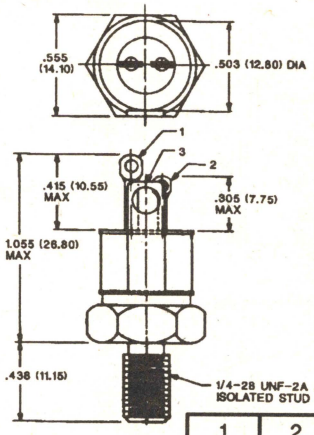

	1	2	3
a	K	G	A
b	MT_1	Gate	MT_2

Diagram 114

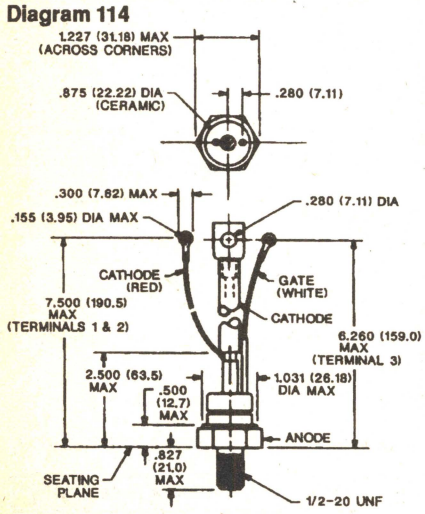

TO94

Diagram 115

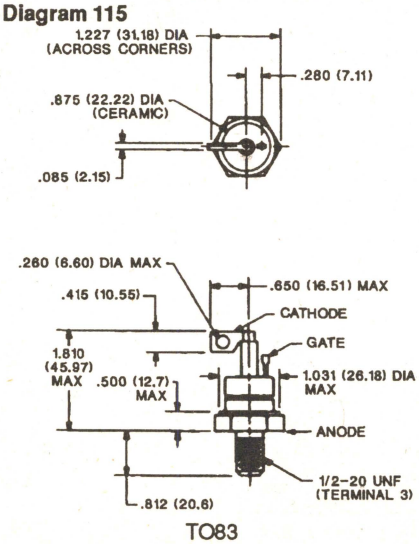

TO83

Diagram 116

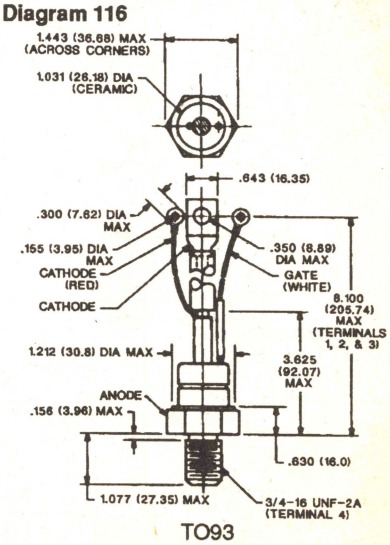

TO93

DIMENSIONAL OUTLINE DRAWINGS

Diagram 117

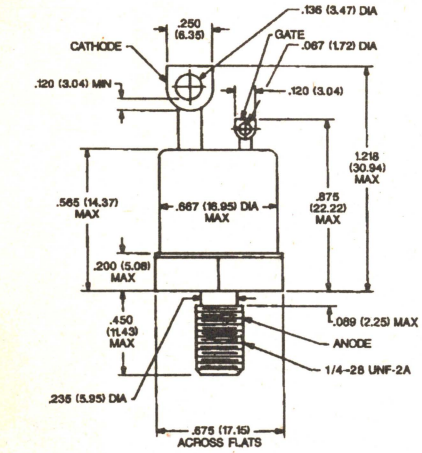

TO65

Diagram 118

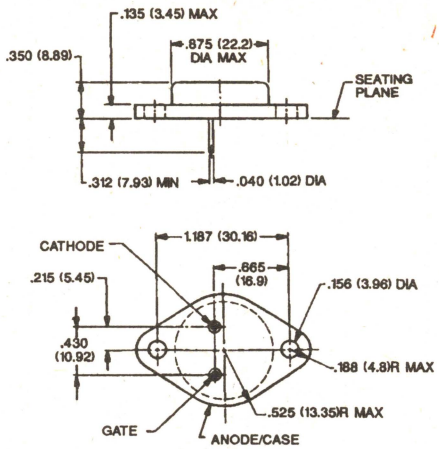

TO3

Diagram 119

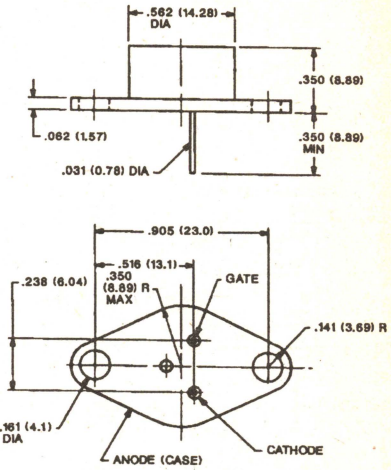

Diagram 172

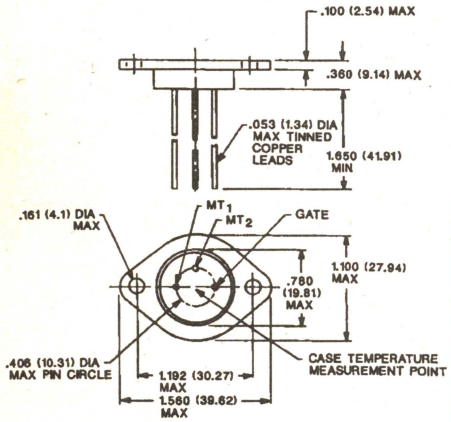

Diagram 177

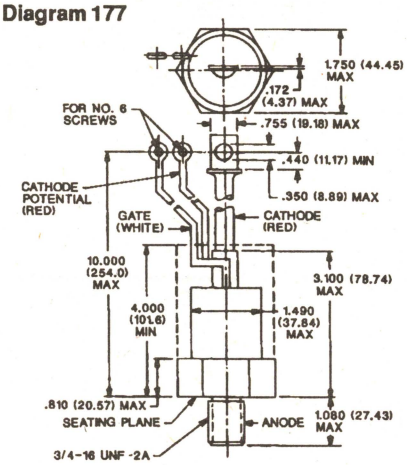

NOTES:
1. Complete threads to extend to within 2 1/2 threads of the seating plane.
2. Pitch diameter of 3/4-16 UNF-2A coated threads (ASA B1.1-1960)

Diagram 178

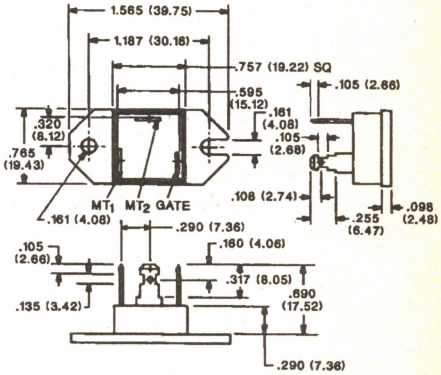

ALL DIMENSIONS ARE MAX

Diagram 346

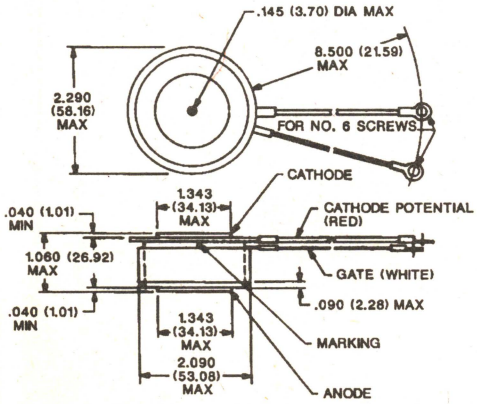

Diagram 347

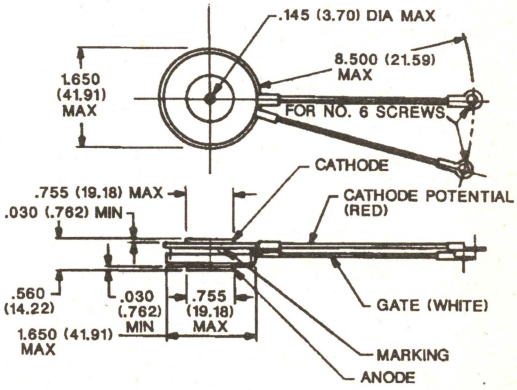

DIMENSIONAL OUTLINE DRAWINGS

Diagram 382

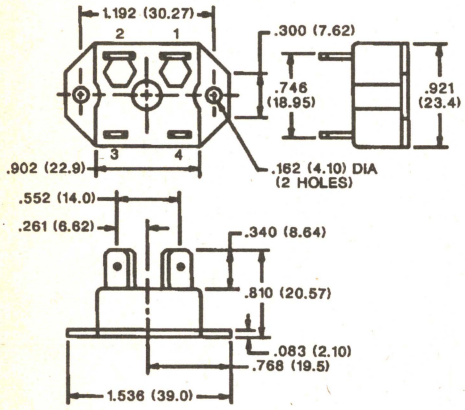

	1	2	3	4
a	K	A	Gate	*
b	MT_1	MT_2	Gate	*

* Common w/Tab 1

Diagram 397

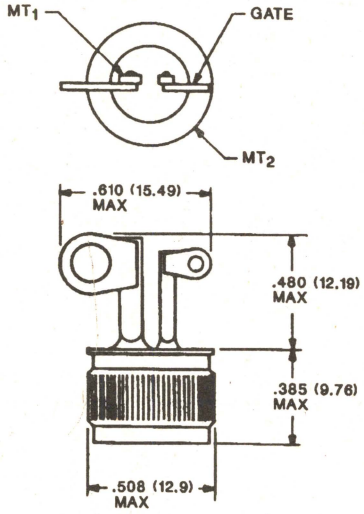

Diagram 404

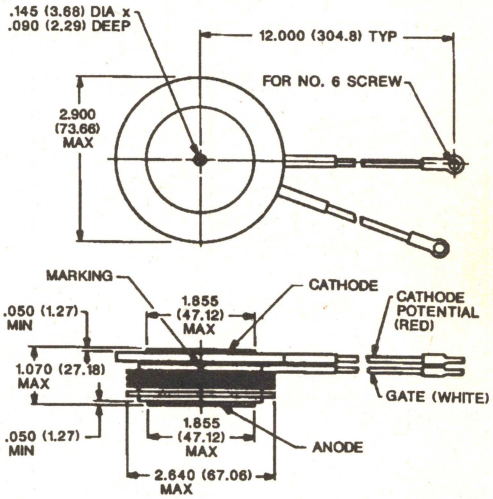

Diagram 406

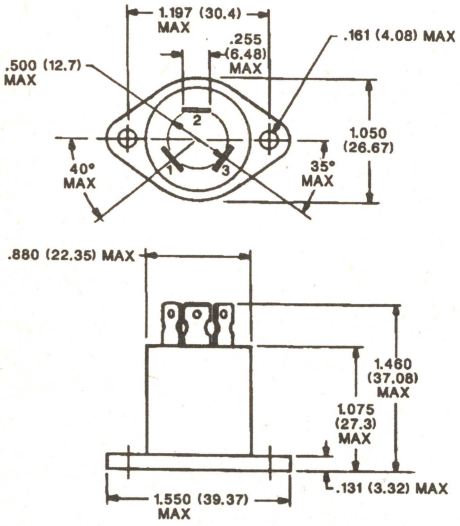

Tab 1. MT_1
2. MT_2
3. Gate

Diagram 491

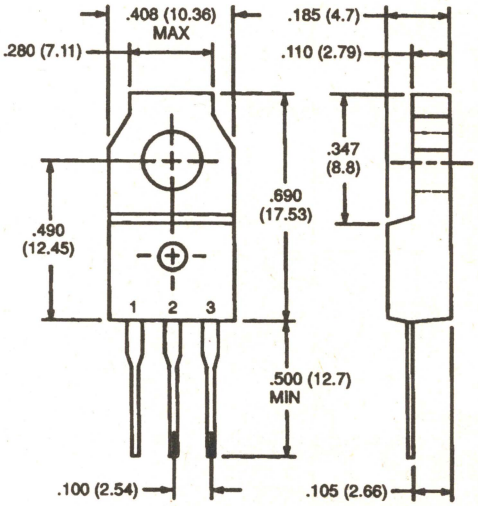

Pin 1. MT_1
2. MT_2
3. Gate

POWERBLOCK MODULES

THYRISTOR MODULES

I_T(AV) per SCR	60A	95A
I_T(RMS) per SCR	120A	150A
Circuit Number	NTE Number	NTE Number
1	5710	5720
2	5711	5721
3	5712	5722
V_{DRM}	1200V	1200V
V_F (Max)	1.7V	1.67V
I_H (Max)	200mA	200mA
I_{TSM} (1 Cycle)	1550A	1950A
V_{GT} (Max)	1.4V	1.4V
I_{GT} (Min)	5mA	5mA
I_{GT} (Max)	120mA	120mA
I^2T	12K A^2Sec	19K A^2Sec
t_q	120µs	200µs
dv/dt	400V/µs	400V/µs
di/dt	800A/µs	800A/µs
r_T	3.4mΩ	3.5mΩ
T_J (Max)	+ 125°C	+ 140°C
R_{THCS}	0.08°C/W	0.05°C/W
Terminal Torque	4Nm	4Nm

RECTIFIER MODULES

I_T(AV) per Rectifier	65A	95A
I_T(RMS) per Rectifier	120A	150A
Circuit Number	NTE Number	NTE Number
4	6220	6230
V_{DRM}	1200V	1200V
I_{FSM} (1 Cycle)	1200A	1650A
V_F (Max)	1.54V	1.35V
T_J (Max)	+ 150°C	+ 150°C
R_{THCS}	0.08°C/W	0.08°C/W
Terminal Torque	4Nm	4Nm

Diagram 422

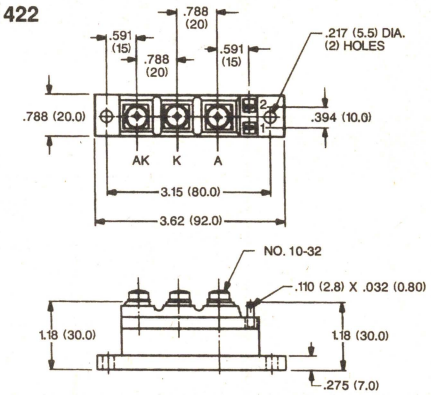

NOTE: Can be used with Heat Sink NTE441A

Circuit 1

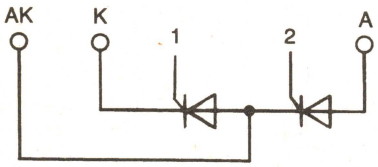

Circuit 2

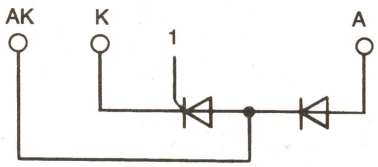

Circuit 3

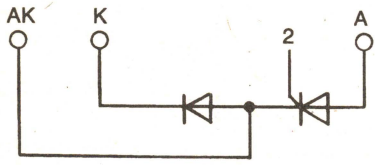

Circuit 4

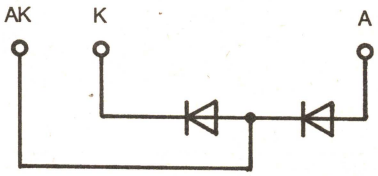

POWERBLOCK NOTES:

MOUNTING: Careful mounting of powerblocks on the heatsink is one of the most important requirements of reliable satisfactory application.

The contact surfaces of powerblock and heatsink must be clean, free from contamination and damage. Finish and flatness of heatsink contact surface should be ≤10µm.

A thin and uniform film of interface thermal compound should be applied to contact surface of powerblock and heatsink.

Fixing bolts have to be uniformly tightened with the specified mounting torque. Cross sections of busbars or cables have to be dimensioned so that heating up the powerblock will be avoided. This applies in particular for series connected fuses.

MAINTENANCE: Powerblocks are maintenance–free. The assembly group should, however, be cleaned from time to time to ensure the insulation capability, the heat dissipation and thus the availability of the power converter.

WARNING: Beryllium oxide is used in the powerblock assembly for insulation. Do not destroy the powerblock case because the beryllium oxide dust resulting from such action is hazardous if inhaled.

HYBRID MODULES

NTE No.	Description	Terminal Positions	Schematic Diagrams
5700	Single Phase, Hybrid Bridge, Common Cathode, Freewheeling Diode	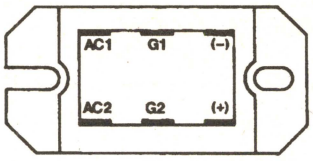	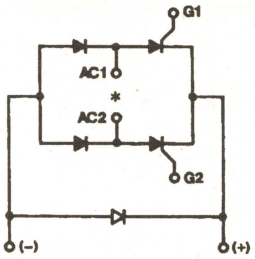
5701	Single Phase, Hybrid Bridge, Common Anode, Freewheeling Diode	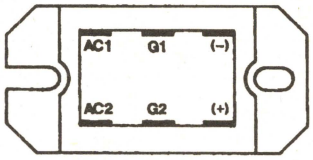	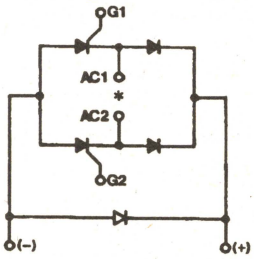
5702	Single Phase, All SCR Bridge	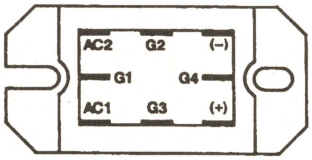	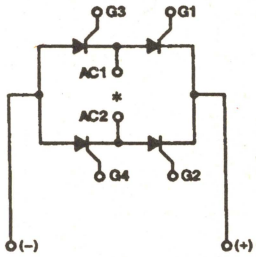
5703	SCR AC Switch	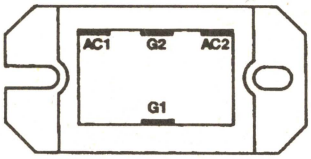	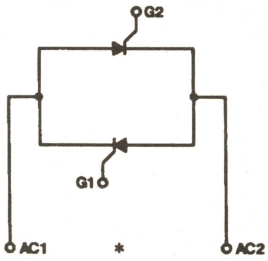
5704	Hybrid Doubler	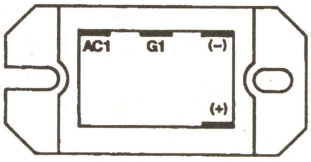	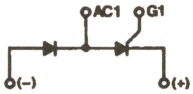
5705	SCR Doubler	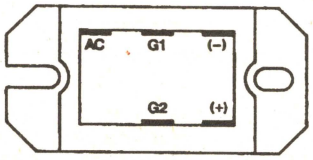	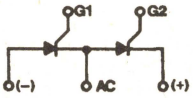

Symbol	Rating	Unit
V_{DRM}	1200	V
$I_T(Av)$ **	1.25	A
$I_T(RMS)$ **	28	A
I_{TSM} (1 Cycle)	375	A
P_{GT} (Max)	8	W
I_{GT} (Max)	60	mA
V_{GT} (Max)	2	V
V_{ISO}	2500	V
V_F (Max)	1.35	V
I_O ***	25	A
I^2T	580	A^2sec
I_{Hold}	100	mA
dv/dt	200	V/µsec
Terminal Torque	5	Nm

** Per SCR or Rectifier
*** This Rating Applies to NTE5700, NTE5701, and NTE5702 **Only**

Diagram 452

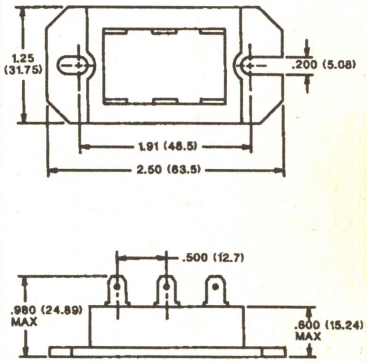

NOTE: Can be used with Heat Sink NTE441A

* For transient protection, a Metal Oxide Varistor (MOV) may be connected externally across terminals AC1 & AC2.

SILICON UNIJUNCTION TRANSISTOR (UJT)

NTE Type Number	Case Style	Diagram Number	Maximum Ratings: RMS Emitter Current (mA) I_E	Interbase Voltage (Volts) V_{BB}	RMS Power Dissipation (mW) P_D	Emitter Reverse Current (μA) I_{EO}	Intrinsic Stand Off Ratio MIN	Intrinsic Stand Off Ratio MAX	Interbase Resistance (kΩ) R_{BBO} MIN	Interbase Resistance (kΩ) R_{BBO} MAX	Valley Point Current (mA) I_V
6400	TO39	125	50	35	450	12	0.45	0.80	4	12	8 Min
6400A	TO39	125	50	55	450	1	0.54	0.67	4	12	8 Min
6401	TO18	126	50	35	300	12	0.56	0.75	4.7	9.1	4 Min
6409	TO18	126	50	35	300	0.2	0.68	0.82	4.7	9.1	8 Min
6410	TO92	9k	50	35	300	0.005 Typ	0.70	0.85	4	9.1	4 Min

PROGRAMMABLE UNIJUNCTION TRANSISTOR (PUT)

NTE Type Number	Case Style	Diagram Number	Maximum Ratings: Gate to Cathode Forward Voltage (Volts) BV_{GKF}	Gate to Cathode Reverse Voltage (Volts) BV_{GKR}	Anode to Cathode Voltage (Volts) BV_{AK}	Power Dissipation (mW) P_D	Gate Current (mA) I_G	Peak Current @ V_S = 10V (μA) I_P	Offset Voltage @ V_S = 10V (Volts) V_T	Minimum Valley Voltage @ V_S = 10V (μA) I_V
6402	TO98/TO92	127a/9g	+40	–5	±40	300	±20	2 @ R_S = 1MΩ	1.6 @ R_g = 1MΩ	70 @ R_g = 1MΩ
								5 @ R_S = 10kΩ	0.6 @ R_g = 10kΩ	1.5mA @ R_g = 10kΩ

DESCRIPTION:

This device has been characterized as a Programmable Unijunction Transistor (PUT), offering many advantages over conventional unijunction transistors. The designer can select R_1 and R_2 to program unijunction characteristics such as η, R_{BB}, I_P, and I_V to meet particular needs. Applications of the PUT include timers, high gain phase control circuits, and relaxation oscillators.

SILICON BILATERAL SWITCH (SBS)

NTE Type Number	Case Style	Diagram Number	Maximum Ratings: Peak Recurrent Forward Current (Amps) I_{Fp}	DC Forward Anode Current (mA) I_F	Power Dissipation (mW) P_D	Switching Voltage (Volts) V_S	Switching Current (μA) I_S	Holding Current (mA) I_{Hold}	Off–State Current @ 5V (μA) I_B	On–State Forward Voltage Drop I_F = 175mA (Volts) V_F
6403	TO92/TO98	9h/127b	1	175	300	6 Min 10 Max	500	1.5	1	1.7

DESCRIPTION:

Silicon Bilateral Switches are specifically designed and characterized for applications where stability of switching voltage over a wide temperature range and well matched bilateral characteristics are an asset. They are ideally suited for half wave and full wave triggering in low voltage SCR and TRIAC phase control circuits.

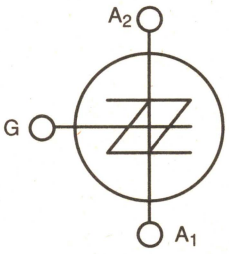

SBS CIRCUIT SYMBOL

See Diagrams, beginning on Page 1–91

SIDAC–BIDIRECTIONAL THYRISTOR DIODES
(For Pulse Generating and Switching Applications)

NTE Type Number	Diagram Number	Breakover Voltage (Volts)	Maximum Ratings: On Voltage (Volts)	Maximum Ratings: Effective Current (Amps)	Maximum Ratings: Surge Current (Amps)	Holding Current (mA)	Power Dissipation (mW)
		V_{BO}	V_T	I_{TRMS}	I_{TSM}	I_{Hold}	P_D
6415	395	40 to 60	1.5	1	13	50	850
6416	395	55 to 65	1.5	1	13	50	850
6417	395	95 to 113	1.5	1	13	50	850
6418	395	104 to 118	1.5	1	13	50	850
6419	395	110 to 125	1.5	1	13	50	850

Storage Temperature: –30° to +30°C
Junction Temperature: +125°C

DESCRIPTION:

The SIDAC is a silicon bilateral voltage triggered switch with greater power handling capabilities than standard DIACs. Upon application of a voltage exceeding the SIDAC breakover voltage point, the SIDAC switches on through a negative resistance region to a low on–state voltage. Conduction will continue until the current is interrupted or drops below the minimum holding current of the device.

Applications:

- High voltage lamp ignitors
- Natural gas ignitors
- Gas oil ignitors
- High voltage power supplies
- Xenon ignitors
- Overvoltage protection
- Pulse generators
- Fluorescent lighting ignitors

SILICON CONTROLLED SWITCH (SCS)

NTE Type Number	Case Style	Diagram Number	Polarity	Maximum Ratings: Collector to Base Breakdown Voltage (Volts)	Maximum Ratings: Emitter to Base Breakdown Voltage (Volts)	Maximum Ratings: Collector to Emitter Breakdown Voltage R_{BE} = 10k (Volts)	Maximum Ratings: Emitter Current (mA)	Maximum Ratings: Collector Current (mA)	Maximum Ratings: Peak Emitter Current (mA)	Maximum Ratings: Holding Current (mA)	Maximum Ratings: Power Dissipation (mW)	DC Current Gain @ V_{CB} = 0, I_E = 1mA
				BV_{CBO}	BV_{EBO}	BV_{CER}	I_E	I_C	I_{EM}	I_{Hold}	P_D	h_{FE}
239	TO72	129	PNP	–70	–70	–70	100	50	500	1	250	0.72 to 2.5
			NPN	70	5	70	–100		–500			

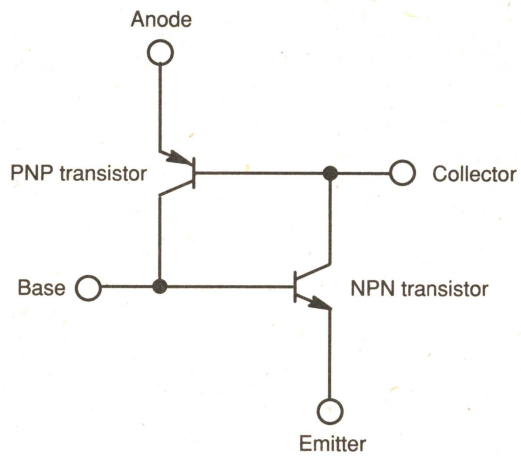

SCS CIRCUIT SYMBOL

See Diagrams, beginning on Page 1–91

SILICON ASYMMETRICAL AC TRIGGER (SAS)

NTE Type Number	Case Style	Diagram Number	Switching Voltages (Volts)				Switching Current (μA)	Forward Voltage Drop (Volts)		Off–State Current (nA)	Maximum Continuous Current (mA)	Maximum Pulsed Current (mA)	Average Power Dissipation (mW)	Switching Speeds (μs)	
			V_{S1}		V_{S2}		I_{S1}/I_{S2}	V_{F1}	V_{F2}	I_{12}/I_{21}	I_{21}	I_{21}	P_D	Turn–On t_{on}	Turn–Off t_{off}
			Min	Max	Min	Max									
6405	TO98	386	14	18	7	9	80	10	1.6	100	200	500	350	1	30

DESCRIPTION:

The NTE6405 is an asymmetrical AC trigger integrated circuit for use in TRIAC phase controls. This device greatly reduces the snap–on effects that are present in symmetrical trigger circuits and minimizes control circuit hysteresis. This performance is possible with a single RC time constant, whereas a symmetrical circuit of comparable performance would require at least three additional passive components.

SILICON UNILATERAL SWITCH (SUS)

NTE Type Number	Case Style	Diagram Number	Forward Switching Voltage (Volts)		Forward Current (μA)	Holding Current (mA)	Power Dissipation (mW)	DC Forward Anode Current (mA)	Peak Recurrent Forward Current (Amps)	Forward Voltage Drop @ I_F (Volts)	Switching Speeds (μs)	
			V_S		I_S	I_{Hold}	P_D	I_F	I_F(Peak)	V_F	Turn–On t_{on}	Turn–Off t_{off}
			Min	Max								
6404	TO98	5	7	9	200	0.75	300	175	1	1.5	1	25

DESCRIPTION:

The NTE6404 is a silicon planer, monolithic integrated circuit having thyristor electrical characteristics closely approximating those of an "ideal" four layer diode. This device is designed to switch at 8V with a 0.02%/°C temperature coefficient. A gated lead is provided to eliminate rate effect, obtain triggering at lower voltages and to obtain transient free wave forms.

Silicon Unilateral Switches are specifically designed and characterized for use in monostable and bistable applications where low cost is of prime importance.

Applications:

- SCR triggers
- Frequency dividers
- Ring counters
- Cross point switching
- Overvoltage sensors

DIACS–SILICON 3–LAYER BILATERAL TRIGGER DIODES

NTE Type Number	Diagram Number	Breakover Voltage (Forward & Reverse) (Volts)	Maximum Breakover Current (μA)	Maximum Peak Pulse (Amps)	Minimum Switching Voltage Change (Both Directions) (Volts)	DO7/DO35 Maximum Power Dissipation (mW)
		V_{BO}	$I_{(BR)1}$ & $I_{(BR)2}$	I_{Pulse}	ΔV	P_D
6407	130	28 ± 4	100	2	6	250
6408	130	32 ± 4	100	2	6	250
6411	130	40 ± 5	100	2	6	250
6412	130	63 ± 7	100	2	6	250

DESCRIPTION:

The NTE6407, NTE6408, NTE6411, and NTE6412 bilateral trigger DIACs offer a range of voltage characteristics from 28 to 63 Volts.

The DIAC semiconductor is a full–wave or bidirectional thyristor. It is triggered from a blocking–to–conduction state for either polarity of applied voltage exceeds the breakover voltage rating of the DIAC.

See Diagrams, beginning on Page 1–91

VARACTOR DIODES FOR RADIO TUNING

NTE Type Number	Diagram Number	Application	Reverse Breakdown Voltage (Volts)	Maximum Forward Current (mA)	Power Dissipation (mW)	Minimum Figure of Merit	Minimum Diode Capacitance (pF)	Capacitance Ratio
			$V_{(BR)}$	I_F	P_D	Q	C_T	C_R
617	394	FM Tuning	32	200	280	100 @ 3V	34 @ 3V	2.5 Min
618	393	AM Tuning	18	50	280	150 @ 1V	440 @ 1V	15

MATCHED VARACTORS FOR UHF/VHF TV TUNERS

(Matched Set of Four)

NTE Type Number	Diagram Number	Maximum Reverse Voltage (Volts)	Maximum Forward Voltage (Volts)	Capacitance Ratio (C_2/C_{24})	Series Resistance (Ω)
		V_R	V_F	C_R	R_S
616	93	30	–	5 ~ 6	0.8
616P	519	30	0.96V @ 100mA	5 ~ 6.1	0.42 ~ 0.62

VOLTAGE VARIABLE CAPACITANCE DIODES

(Tuning Diodes)

NTE Type Number	Diagram Number	Nominal Diode Capacitance @ V_R = 4V, f = 1MHz (pF)	Typical Tuning Ratio C_2/C_{30} @ f = 1MHz	Maximum Reverse Breakdown Voltage (Volts)	Maximum Forward Current (mA)	Maximum Power Dissipation (Watts)	Minimum Figure of Merit @ V_R = 4Vdc, f = 50MHz
		C_T	T_R	$V_{(BR)}$	I_F	P_D	Q
610	109	6.8	2.7	30	200	280	450
611	109	10	2.9	30	200	280	400
612	109	12	2.9	30	200	280	400
613	109	22	2.9	30	200	280	350
614	109	33	3.0	30	200	280	200

MICROWAVE MIXER DIODES

NTE Type Number	Diagram Number	Test Frequency (GHz)	Maximum Noise Figure (dB)	IF Impedence @ 30MHz (Ω)	Maximum VSWR Ratio	ERGS Burn Out
1N415C	515	9.375	9.5	325 – 475	1.5	2
1N415E	515	9.375	7.5	335 – 465	1.3	2
1N416C	515	3.060	–	300 – 700	1.5	2
1N416E	515	3.060	7.0	350 – 450	1.3	5

SILICON HOT–CARRIER DIODE

(Schottky Barrier Diode, Pin Diode)

NTE Type Number	Diagram Number	Description and Application	Reverse Breakdown Voltage (Volts)	Maximum Series Resistance (Ω)	Maximum Reverse Leakage Current (nA)	Maximum Diode Capacitance (pF)	Typical Series Inductance (nH)	Maximum Forward Power Dissipation (mW)
			$V_{(BR)R}$	R_S	I_R	C_T	L_S	P_F
553	93	Silicon Diode for UHF and VHF Switch	30	1.2	150	2	2.5	200
555	102	Silicon Diode for UHF and VHF Detectors	50	0.7	200	1	3.0	400

See Diagrams, beginning on Page 1–91

DIMENSIONAL OUTLINE DRAWINGS

Diagram 5

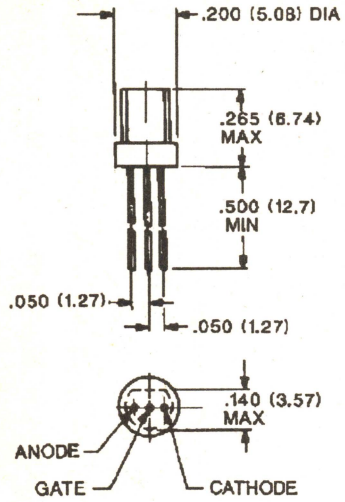

Diagram 9

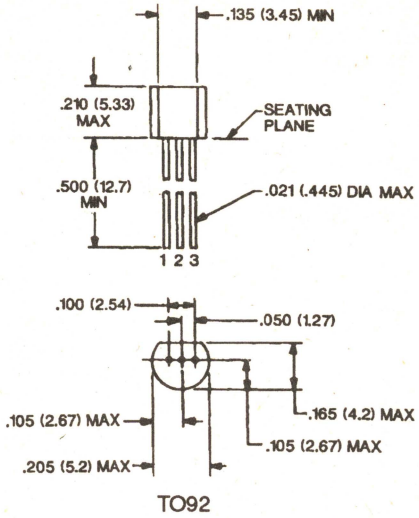

TO92

	1	2	3
g	A	G	K
h	A_1	G	A_2
k	B_1	E	B_2

Diagram 93

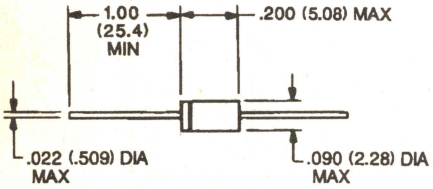

COLOR BAND DENOTES CATHODE

DO35

Diagram 102

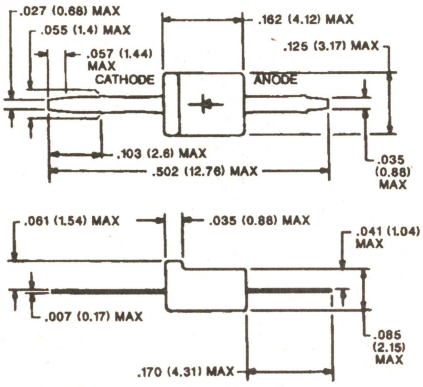

Diagram 109

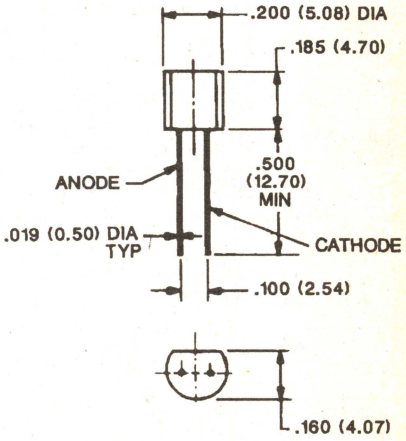

TO92

Diagram 125

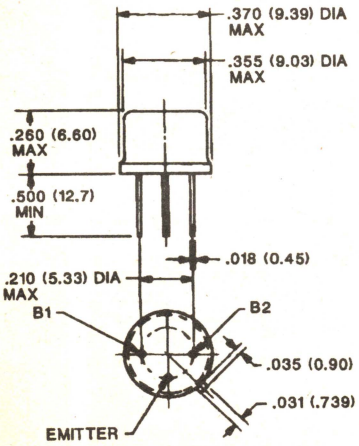

TO39

Diagram 126

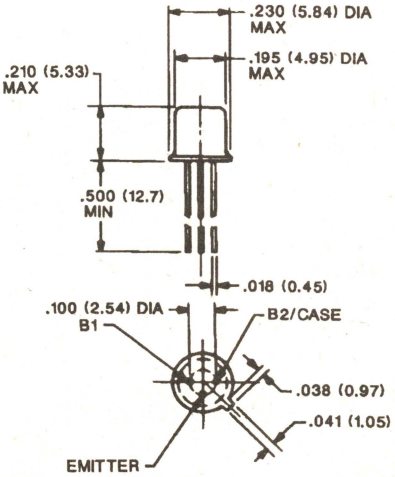

TO18

Diagram 127

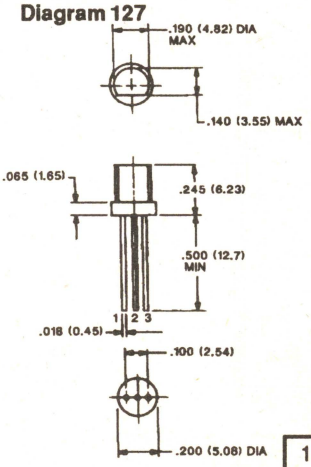

TO98

	1	2	3
a	A	G	K
b	A_1	G	A_2

DIMENSIONAL OUTLINE DRAWINGS

Diagram 129

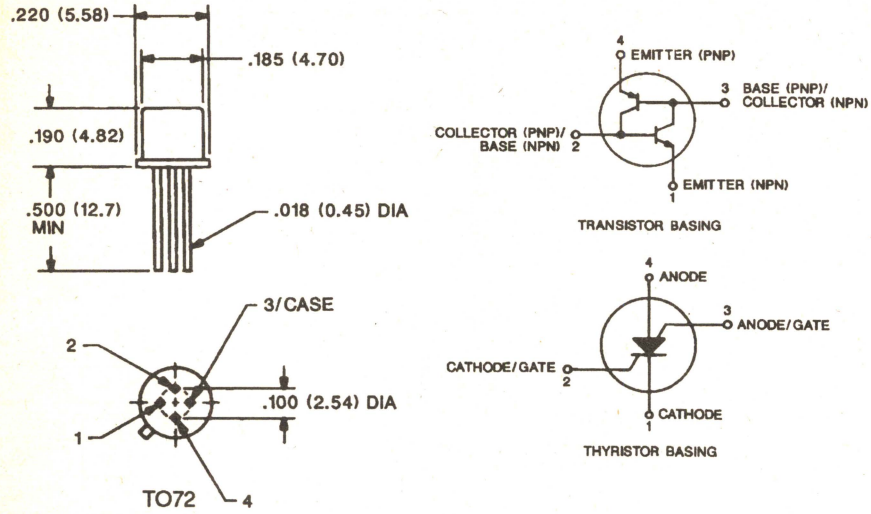

Diagram 130

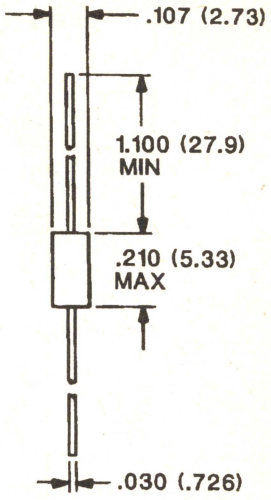

Diagram 386

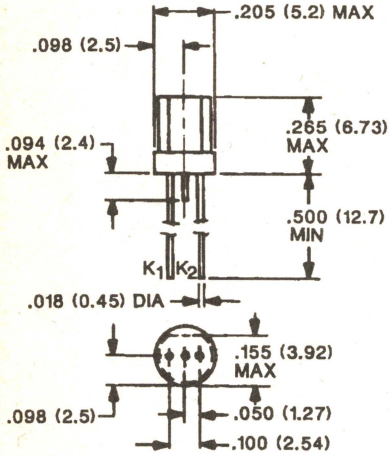

Diagram 393

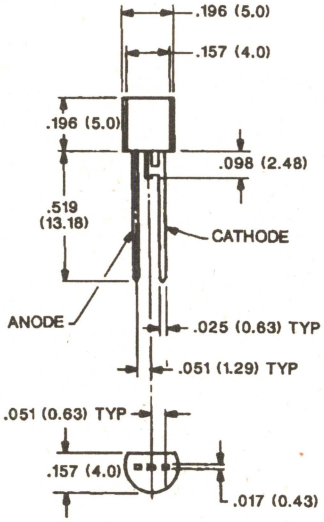

Diagram 394

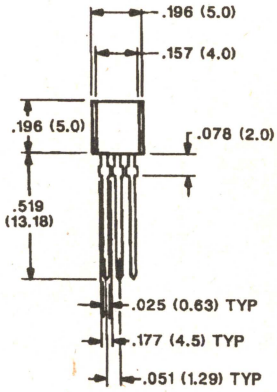

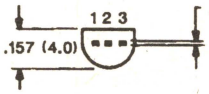

Pin 1. Anode 1
2. Cathode
3. Anode 2

Diagram 395

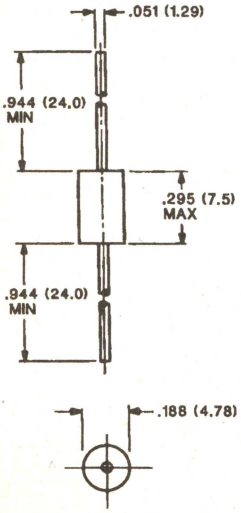

Diagram 515

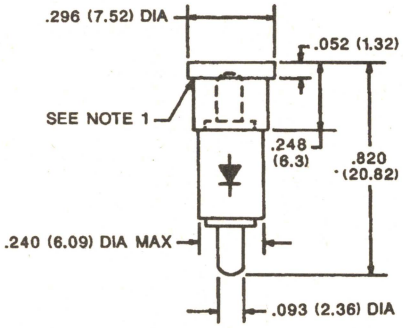

NOTE 1. DIODE POLARITY IS REVERSED WHEN BRASS CAP IS REMOVED AND PLACED ON OPPOSITE END

Diagram 519

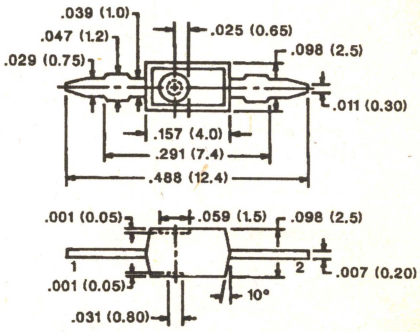

Pin 1. Cathode
2. Anode

METAL OXIDE VARISTOR (MOV)

NTE Type Number	Diagram Number/ Case Diameter	Maximum Ratings (T_A = 25°C)				Characteristics		
		Continuous		Transient				
		RMS Voltage (Volts)	DC Voltage (Volts)	Energy (10/1000µs) (Joules)	Peak Current (8/20µs) (Amps)	Nominal Varistor Voltage @ 1mA DC Test Current (Volts)	Maximum Clamping Voltage,, V_C @ Test Current (8/20µs) (Volts)	Transient Power Dissipation (Watts)
		V_m (AC)	V_m (DC)	W_{TM}	I_{TM}	V_{NOM}	V_{CL}	P_D
1V010	301 (8.5mm)	10	12	0.8	250	18	45	0.25
2V010	302 (16mm)	10	12	3.5	1000	18	45	0.60
1V014	301 (8.5mm)	14	18	1.2	250	22	55	0.25
2V014	302 (16mm)	14	18	4.0	1000	22	55	0.60
1V015	301 (8.5mm)	15	20	1.0	250	24	52	0.25
2V015	302 (16mm)	15	20	4.5	1000	24	48	0.60
1V017	301 (8.5mm)	17	22	1.3	250	27	60	0.25
2V017	302 (16.mm)	17	22	5.0	1000	27	60	0.60
1V020	301 (8.5mm)	20	26	1.5	250	33	70	0.25
2V020	302 (16mm)	20	26	6.0	1000	33	70	0.60
1V025	301 (8.5mm)	25	31	1.7	250	39	80	0.25
2V025	302 (16mm)	25	31	7.0	1000	39	80	0.60
1V030	301 (8.5mm)	30	38	2.3	250	47	95	0.25
2V030	302 (16mm)	30	38	8.5	1000	47	95	0.60
1V035	301 (8.5mm)	35	45	2.7	250	56	110	0.25
2V035	302 (16mm)	35	45	10.0	1000	56	110	0.60
1V040	301 (8.5mm)	43	55	3.2	250	68	135	0.25
2V040	302 (16mm)	43	55	13.0	1000	68	135	0.60
1V050	301 (8.5mm)	52	66	4.0	250	82	150	0.25
2V050	302 (16mm)	52	66	14.0	1000	82	150	0.60
1V060	301 (8.5mm)	63	80	6.0	1200	100	175	0.25
2V060	302 (16mm)	63	80	18.0	4500	100	175	0.60
1V075	301 (8.5mm)	75	95	5.0	1200	120	205	0.25
2V075	302 (16mm)	75	95	21.0	4500	120	205	0.60
1V095	301 (8.5mm)	95	125	7.0	1200	150	250	0.25
2V095	302 (16mm)	95	125	29.0	4500	150	250	0.60
1V115	301 (8.5mm)	115	150	10.0	1200	171	295	0.25
2V115	302 (16mm)	115	150	35.0	4500	171	300	0.60
1V130	301 (8.5mm)	135	180	10.0	1200	216	355	0.25
2V130	302 (16mm)	135	180	39.0	4500	216	355	0.60
524V13	192 (23mm)	135	180	72.0	6500	216	355	1.00
1V150	301 (8.5mm)	160	210	10.0	1200	240	410	0.25
2V150	302 (16mm)	160	210	40.0	4500	240	410	0.60
524V15	192 (23mm)	160	210	80.0	6500	240	410	1.00
1V250	301 (8.5mm)	240	320	20.0	1200	390	630	0.25
2V250	302 (16mm)	240	320	70.0	4500	390	630	0.60
524V25	192 (23mm)	240	320	129.0	6500	390	630	1.00

SELECTING THE PROPER MOV VOLTAGE RATING:

1. **Determine the required voltage rating.**
   First, the maximum steady–state operating voltage of the circuit must be determined. Care must be taken to use the upper tolerance limit of the voltage source, e.g., for a 220VAC line,a 10% high line condition should be assumed, resulting in 242 Volts. Once the level is determined, refer to the column in the data table headed "Maximum Continuous Voltage" and select a group having the nearest greater value to this level.

See Diagrams, beginning on Page 1–96

METAL OXIDE VARISTOR (MOV)

NTE Type Number	Diagram Number/ Case Diameter	Maximum Ratings (T_A = 25°C) Continuous: RMS Voltage (Volts) V_m (AC)	Continuous: DC Voltage (Volts) V_m (DC)	Transient: Energy (10/1000µs) (Joules) W_{TM}	Transient: Peak Current (8/20µs) (Amps) I_{TM}	Characteristics: Nominal Varistor Voltage @ 1mA DC Test Current (Volts) V_{NOM}	Maximum Clamping Voltage,, V_C @ Test Current (8/20µs) (Volts) V_{CL}	Transient Power Dissipation (Watts) P_D
1V275	301 (8.5mm)	260	330	20.0	1200	430	685	0.25
2V275	302 (16mm)	260	330	72.0	4500	430	685	0.60
524V27	192 (23mm)	260	330	135.0	6500	430	685	1.00
1V300	301 (8.5mm)	280	370	22.0	1200	470	740	0.25
2V300	302 (16mm)	280	370	79.0	4500	470	740	0.60
524V30	192 (23mm)	280	370	149.0	6500	470	740	1.00
2V420	302 (16mm)	420	560	90.0	4500	680	1110	0.60
524V42	192 (23mm)	420	560	160.0	6500	680	1110	1.00
2V480	302 (16mm)	480	640	105.0	4500	750	1240	0.60
524V48	192 (23mm)	480	640	180.0	6500	750	1240	1.00

SELECTING THE PROPER MOV VOLTAGE RATING:

1. **Determine the required voltage rating.**
   First, the maximum steady–state operating voltage of the circuit must be determined. Care must be taken to use the upper tolerance limit of the voltage source, e.g., for a 220VAC line,a 10% high line condition should be assumed, resulting in 242 Volts. Once the level is determined, refer to the column in the data table headed "Maximum Continuous Voltage" and select a group having the nearest greater value to this level.

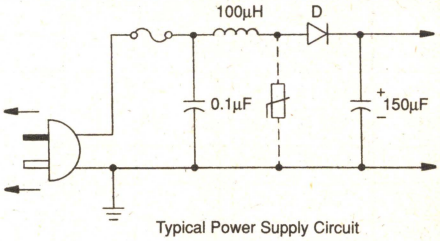

Typical Power Supply Circuit

VARISTORS

(VOLTAGE COMPENSATING DIODES)

NTE Type Number	Material	Diagram Number	Forward Voltage Drop (Volts) V_F Min	Typ	Max	@ I_F mA	Maximum Ratings: Forward DC Current (mA) I_F	Surge Current for 10msec (Amps) I_{FSM}	Reverse Characteristics @ 100V (µA) I_R
606	Silicon	97	1.60 2.05	1.80 2.30	2.00 2.55	1 70	150	27	10
607	Silicon	97	2.10 2.70	2.35 3.00	2.60 3.30	1 70	100	25	10

T_{stg}: –40°C to +130°C
T_{op}: –25°C to +70°C

(TEMPERATURE COMPENSATING DIODES)

NTE Type Number	Material	Case Style	Diagram Number	Maximum Forward Current (mA) I_F	Forward Voltage Drop V_F (Volts) Min	Max	@ I_F mA	V_F (mV/°C)
600	Silicon	DO7	91	10	0.63	0.69	3	2.0
601	Silicon	–	103	20	0.56	0.61	1.5	1.8
605	Silicon	–	181	30	1.24	1.35	1.5	3.6
605A	Silicon	DO35	518	100	1.26	1.36	3	4.6

See Diagrams, beginning on Page 1–96

1500 WATTS OF PEAK PULSE POWER DISSIPATION @ 1msec

NTE Type Number	Application	Diagram Number	Maximum Reverse Stand Off Voltage (See Note 1) (Volts)	Maximum Reverse Leakage Current @ V_R (μA)	Minimum Breakdown Voltage @ 1mA (Volts)	Maximum Clamping Voltage @ I_{pp}/I_{RSM} (Volts)		
			V_R	I_R	B_V	V_C		
						I_{pp} = 30A	I_{pp} = 60A	I_{RSM} = 120A
4900	Transient Protection for CMOS, MOS, BIPOLAR, IC's, (TTL, ECL, DTL, RTL, and Linear Functions)	182	5	300	6	7.6	8.0	8.5

Note 1: A Transient Suppressor is usually selected according to the "Reverse Stand Off Voltage (V_R)" which should be equal to or greater than the DC or continuous peak operating voltage level.

UNIDIRECTIONAL (1500 Watts of Peak Pulse Power Dissipation @ 25°C for 1msec)

NTE Type Number	Diagram Number	Maximum Reverse Stand Off Voltage (Volts)	Breakdown Voltage @ I_T (Volts)				Maximum Ratings			Temperature Coefficient of BV%/°C
							Clamping Voltage @ I_{pp} (1msec) (Volts)	Reverse Leakage Current @ V_R (μA)	Peak Pulse Current (Amps)	
		V_R	V_{BR}				V_C	I_R	I_{pp}	
			Min	Typ	Max	I_T mA				
4902	183	5.80	6.45	6.80	7.14	10.0	10.5	1000	143	0.057
4918	183	11.10	12.40	13.00	13.70	1.0	18.2	5.0	82.0	0.081
4926	183	15.30	17.10	18.00	18.90	1.0	25.2	5.0	59.5	0.088
4928	183	17.10	19.00	20.00	21.00	1.0	27.7	5.0	54.0	0.090
4934	183	23.10	25.70	27.05	28.40	1.0	37.5	5.0	40.0	0.096
4950	183	43.60	48.50	51.05	53.60	1.0	70.1	5.0	21.4	0.102
4958	183	58.10	64.60	68.00	71.40	1.0	92.0	5.0	16.3	0.104
4988	183	171.0	190.00	200.00	210.00	1.0	274.0	5.0	5.5	0.108

Note 1: A Transient Suppressor is usually selected according to the "Reverse Stand Off Voltage (V_R)" which should be equal to or greater than the DC or continuous peak operating voltage level.

Note 2: Steady State Power Dissipation is 5 Watts. Forward Surge Current is 200 Amps.
Storage & Operating Temperature Range is –65°C to +175°C.

BIDIRECTIONAL (1500 Watts of Peak Pulse Power Dissipation @ 25°C for 1msec)

NTE Type Number	Diagram Number	Maximum Reverse Stand Off Voltage (Volts)	Breakdown Voltage @ I_T (Volts)				Maximum Ratings			Temperature Coefficient of BV%/°C
							Clamping Voltage @ I_{pp} (1msec) (Volts)	Reverse Leakage Current @ V_R (μA)	Peak Pulse Current (Amps)	
		V_R	V_{BR}				V_C	I_R	I_{pp}	
			Min	Typ	Max	I_T mA				
4903	183	5.80	6.45	6.80	7.14	10.0	10.5	1000	143	0.057
4919	183	11.10	12.40	13.00	13.70	1.0	18.2	5.0	82.0	0.081
4927	183	15.30	17.10	18.00	18.90	1.0	25.2	5.0	59.5	0.088
4929	183	17.10	19.00	20.00	21.00	1.0	27.7	5.0	54.0	0.090
4935	183	23.10	25.70	27.05	28.40	1.0	37.5	5.0	40.0	0.096
4951	183	43.60	48.50	51.05	53.60	1.0	70.1	5.0	21.4	0.102
4959	183	58.10	64.60	68.00	71.40	1.0	92.0	5.0	16.3	0.104
4989	183	171.0	190.00	200.00	210.00	1.0	274.0	5.0	5.5	0.108

Note 1: A Transient Suppressor is usually selected according to the "Reverse Stand Off Voltage (V_R)" which should be equal to or greater than the DC or continuous peak operating voltage level.

Note 2: Steady State Power Dissipation is 5 Watts. Forward Surge Current is 200 Amps.
Storage & Operating Temperature Range is –65°C to +175°C.

See Diagrams, beginning on Page 1–96

DIMENSIONAL OUTLINE DRAWINGS

Diagram 91

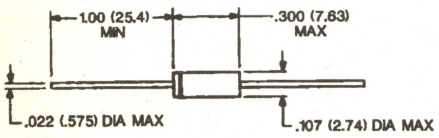

COLOR BAND DENOTES CATHODE

DO7

Diagram 97

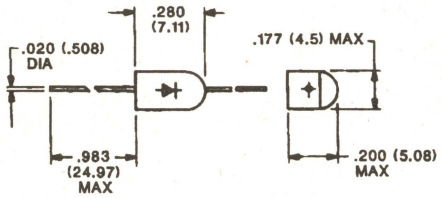

Diagram 103

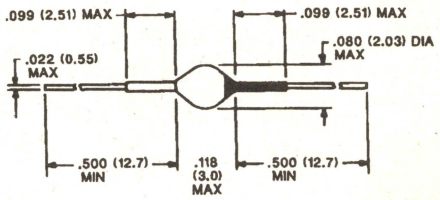

COLORED END INDICATES CATHODE

Diagram 181

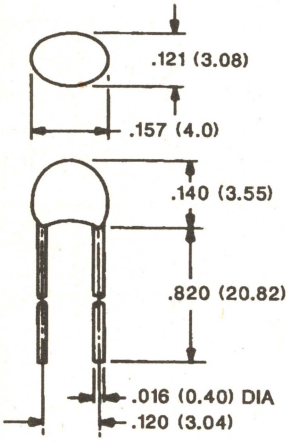

COLOR END DENOTES CATHODE

Diagram 182

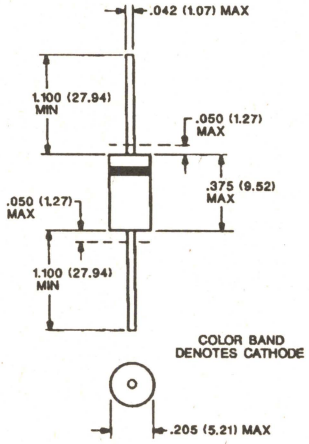

Diagram 183

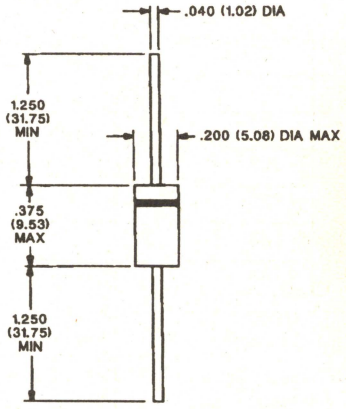

COLOR BAND DENOTES CATHODE

Diagram 192

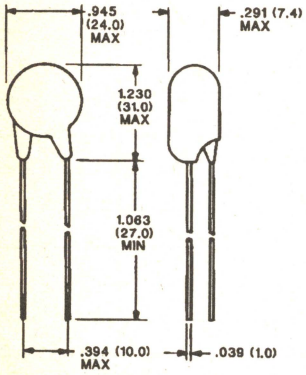

Diagram 301

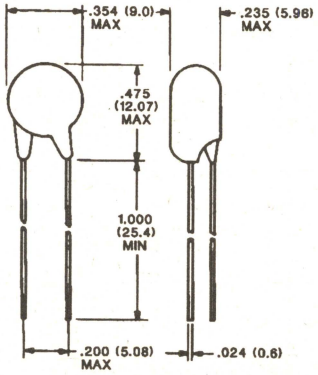

Diagram 302

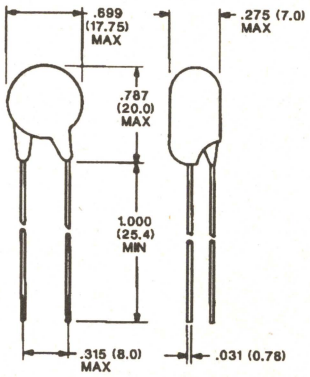

Diagram 518

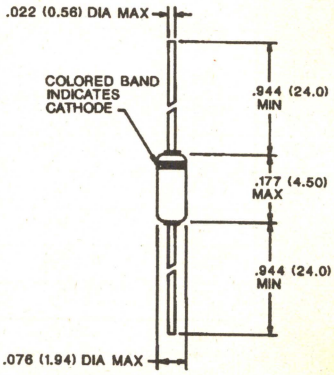

IC PROTECTORS (ICP)

Description:

The IC Protector (ICP) is an overcurrent protection device having stable and high–speed circuit tripping characteristics which enables these devices to shut off the circuit quickly and safely. This quick shut–off response protects valuable semiconductor devices and circuits from common load short–circuit failures.

Features:

- Precise and extremely stable cut–off characteristics
- Small internal resistance with low voltage drop
- Nonflammable
- Compact

Applications:

- Overcurrent protection

NTE Type Number	Diagram Number	Case Style	Maximum Rated Voltage (Volts)	Maximum Rated Current (Amps)	Typical Internal Resistance (Ω)	Operating Temperature (°C)	Storage Temperature (°C)
						T_{opr}	T_{stg}
15005E	480	"F" Type	50	0.4	0.220	–55 to +125	–55 to +125
15006E	480	"F" Type	50	0.6	0.135	–55 to +125	–55 to +125
15007E	480	"F" Type	50	0.8	0.100	–55 to +125	–55 to +125
15008E	480	"F" Type	50	1.0	0.070	–55 to +125	–55 to +125
15009E	480	"F" Type	50	1.5	0.042	–55 to +125	–55 to +125
15019E	481	"N" Type	50	0.25	0.350	–55 to +125	–55 to +125
15020E	481	"N" Type	50	0.4	0.220	–55 to +125	–55 to +125
15021E	481	"N" Type	50	0.6	0.135	–55 to +125	–55 to +125
15022E	481	"N" Type	50	0.8	0.100	–55 to +125	–55 to +125
15023E	481	"N" Type	50	1.0	0.070	–55 to +125	–55 to +125

Diagram 480

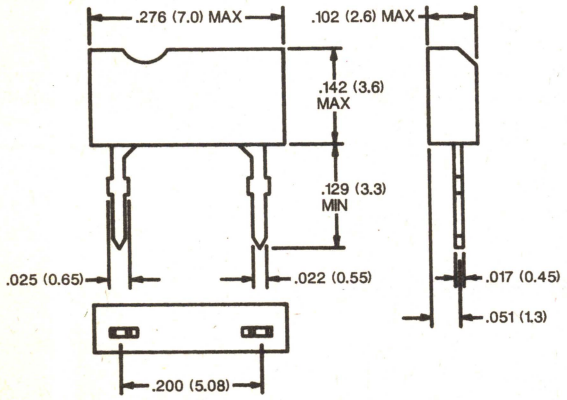

"F" Type

Diagram 481

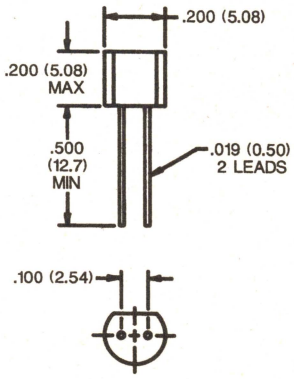

"N" Type

THERMAL CUTOFFS

(THERMAL FUSES)

THERMAL CUT–OFF PRODUCT DATA

Nineteen Thermal Cut–offs (also known as Thermal Fuses) are now included in the NTE product line. They are miniature, NON–RESETTABLE temperature sensitive devices designed to prevent appliances and electronic equipment from overheating.

Literally thousands of different applications have been devised for thermal–cutoffs, thus providing a large replacement market. Such applications include:

- Hair Dryers
- Refrigerators
- Battery Chargers
- Irons
- Hot Plates
- Glue Guns
- And hundreds of others
- Window Fans
- Coffee Makers
- Microwave Ovens
- Popcorn Poppers
- Dishwashers
- Electric Motors

The TCO (Thermal Cut–Off) responds to temperature by interrupting an electrical circuit when the operating and/or environmental temperature exceeds the thermal rating of the device. This is accomplished when the internal organic pellet experiences a phase change, allowing the spring activated contacts to permanently open the circuit.

NTE Type Number	Diagram Number	Maximum Temperature For Opening	
		°C	°F
8070	193	72	162
8076	193	77	171
8081	193	84	184
8085	193	87	189
8090	193	93	200
8096	193	98	209
8098	193	100	212
8103	193	104	220
8108	193	109	229
8115	193	117	243

NTE Type Number	Diagram Number	Maximum Temperature For Opening	
		°C	°F
8118	193	121	250
8125	193	128	263
8139	193	141	286
8149	193	152	306
8167	193	171	340
8181	193	184	364
8213	193	216	421
8226	193	228	443
8242	193	240	464

FEATURES:

- Maximum Current Rating: 15 Amps
- Typical Opening Temperature Tolerance: +0°C, –4°C
- 18 Guage Solid Copper Wire
- Full 1 1/3 " leads to fit all replacement configurations
- All types meet the requirements of Underwriters Laboratories Specifications and CSA.
- Each device comes packaged with 2 crimp splices for solderless connection (Poly–bag or Carton pack orders only).

Note 1: Color Band does not denote temperature group.
Note 2: The electrical resistance of the NTE series thermal cut–off is comparable to that found in an equal length of 18 gauge solid copper wire. With proper air flow, heat generation below 15 Amps is minimal, above 15Amps the upper limit on the current capacity will depend on the environment for each specific application.

Diagram 192

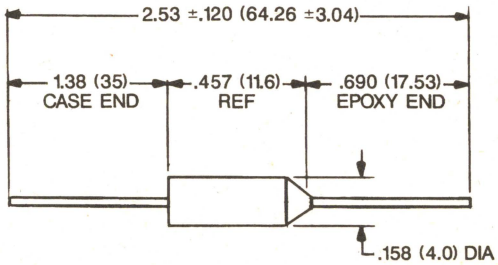

QUARTZ CRYSTALS

FOR MICROPROCESSOR AND TELEVISION APPLICATIONS

(IN ORDER OF NTE PART NUMBER)

NTE Type Number	Frequency (MH_Z)	Holder Type	Diagram Number	Load Capacitance (pF)	Maximum Effective Series Resistance (Ohms)	Frequency Tolerance (% at 25°C)	Common Microprocessor or Television Application
358	3.579545	HC–6	197	18 ± 0.5	100	± 0.003	6801, 6803, TV Colorburst
358A	3.579545	HC–6/GND Lead	196	Series	100	± 0.003	TV Colorburst
358B	3.579545	HC–6	197	34.7 ± 0.5	100	± 0.003	TV Color Oscillator
358C	3.579545	HC–18	195	18	100	± 0.005	6801, 6803, TV Colorburst
650	1.000	HC–33	194	13	500	± 0.005	CDP1800/1802, ISP5000A, MPS6500, M6800, S6800, SC/MP, Z80, 2650
651	2.000	HC–33	194	20	200	± 0.005	COSMAC, F–8, IPC–16, 2650A, 3850, 6500, 6501, 6502, 6503, 6514, 6515 6802, 6803, 8080A
652	4.000	HC–18	195	20	100	± 0.005	F3870, Z80, 4040, 4021, 6800
653	5.000	HC–18	195	20	50	± 0.005	AM8089, CDP1804, CDP1805, CDP1806, CP–1600, HD6120, Z80, 8086
654	10.245	HC–18	195	32	25	± 0.005	Scanner Applications
655	4.0000	HC–18	195	Series	100	± 0.005	AM9080, EA9002, HM6100, IM6100, Pace, TMS1000/1200, SC/MP–11, YM6100
656	4.9152	HC–18	195	Series	50	± 0.005	Standard Clock Frequency, COM5026/5046, Z80, Z80A
657	6.1440	HC–18	195	Series	50	± 0.005	CP–1600, 8085A, 8748
658	10.0000	HC–18	195	Series	20	± 0.005	AMD2901, TTL Macrologic, 8085A–2, 9405, 9440
659	18.0000	HC–18	195	Series	20	± 0.005	MCS–80, 8008, 8080A, 8224
660	18.4320	HC–18	195	Series	20	± 0.005	AM9080, MCS–80, UPD8080A, 8080A, 8224
661	20.0000	HC–18	195	Series	20	± 0.005	AM2900, MCS–80, 8008, 8080A, 8224
662	22.1184	HC–18	195	Series	20	± 0.005	MCS–80, 8080A, 8224

DEFINITIONS AND ENGINEERING DATA

Theory of Operation:

Crystal resonators derive their basic frequency selective capability from a mechanical vibration resulting from a piezoelectric effect in the material. Although the theoretical analysis of this piezoelectric effect is a relatively complex electro–mechanical function, it can be shown as a simple eqvivalent circuit, as illustrated in Figure 1.

Figure 1
Equivalent Crystal Circuit

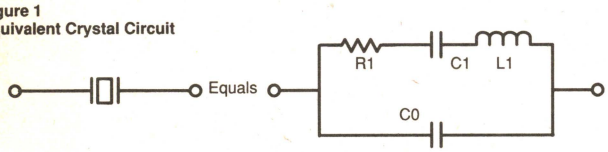

Equivalent Crystal Circuit:

The equivalent crystal circuit is useful in explaining the electric characteristics of a crystal operating near its fundamental resonant frequency. The static capacitance, C0, is the capacitance measured from pin to pin which includes the crystal electrode, mounting structure, and holder. R1, C1, and L1 are known as the motional arm of the circuit. C1 represents the motional capacitance of the quartz; L1 is the motional inductance, a function of the mass; and R1 represents the equivalent motional arm resistance.

Series Resonance:

When a crystal is operating at series resonance (fs), it looks resistive in the circuit. Thus its impedance at fs is near zero. In a well designed series resonant circuit, correlation is not a problem and load capacitance does not have to be specified.

Figure 2
Series Resonance

Parallel Resonance (Anti–resonance)

When a crystal is operating at parallel resonance (fa), it will look inductive in the circuit. The crystal's impedance reaches its peak at fa. A change in circuit reactance values will have the effect of pulling the frequency of the crystal. If the crystal is to be used at parallel resonance, the load capacity should always be specified. Load capacity is the dynamic capacity of the total circuit measured or computed across the crystal terminals. In parallel circuit design, the load capacity should be selected to operate the crystal at a stable point in the fs–fa reactance curve (as close to fs as possible)

Figure 3
Anti–Resonance/Parallel

Frequency Tolerance:

The frequency tolerance is the maximum allowable deviation from nominal frequency at a specified temperature. It is normally specified in parts per million (PPM), or % 0f nominal frequency.

QUARTZ CRYSTALS

FOR MICROPROCESSOR AND TELEVISION APPLICATIONS

(IN ORDER OF FREQUENCY)

NTE Type Number	Frequency (MH_Z)	Holder Type	Diagram Number	Load Capacitance (pF)	Maximum Effective Series Resistance (Ohms)	Frequency Tolerance (% at 25°C)	Common Microprocessor or Television Application
650	1.000	HC–33	194	13	500	± 0.005	CDP1800/1802, ISP5000A, MPS6500, M6800, S6800, SC/MP, Z80, 2650
651	2.000	HC–33	194	20	200	± 0.005	COSMAC, F–8, IPC–16, 2650A, 3850, 6500, 6501, 6502, 6503, 6514, 6515 6802, 6803, 8080A
358	3.579545	HC–6	197	18 ± 0.5	100	± 0.003	6801, 6803, TV Colorburst
358A	3.579545	HC–6/GND Lead	196	Series	100	± 0.003	TV Colorburst
358B	3.579545	HC–6	197	34.7 ± 0.5	100	± 0.003	TV Color Oscillator
358C	3.579545	HC–18	195	18	100	± 0.005	6801, 6803, TV Colorburst
652	4.000	HC–18	195	20	100	± 0.005	F3870, Z80, 4040, 4021, 6800
655	4.0000	HC–18	195	Series	100	± 0.005	AM9080, EA9002, HM6100, IM6100, Pace, TMS1000/1200, SC/MP–11, YM6100
656	4.9152	HC–18	195	Series	50	± 0.005	Standard Clock Frequency, COM5026/5046, Z80, Z80A
653	5.000	HC–18	195	20	50	± 0.005	AM8089, CDP1804, CDP1805, CDP1806, CP–1600, HD6120, Z80, 8086
657	6.1440	HC–18	195	Series	50	± 0.005	CP–1600, 8085A, 8748
658	10.0000	HC–18	195	Series	20	± 0.005	AMD2901, TTL Macrologic, 8085A–2, 9405, 9440
654	10.245	HC–18	195	32	25	± 0.005	Scanner Applications
659	18.0000	HC–18	195	Series	20	± 0.005	MCS–80, 8008, 8080A, 8224
660	18.4320	HC–18	195	Series	20	± 0.005	AM9080, MCS–80, UPD8080A, 8080A, 8224
661	20.0000	HC–18	195	Series	20	± 0.005	AM2900, MCS–80, 8008, 8080A, 8224
662	22.1184	HC–18	195	Series	20	± 0.005	MCS–80, 8080A, 8224

Diagram 194

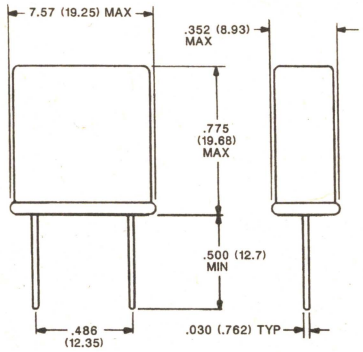

Diagram 195

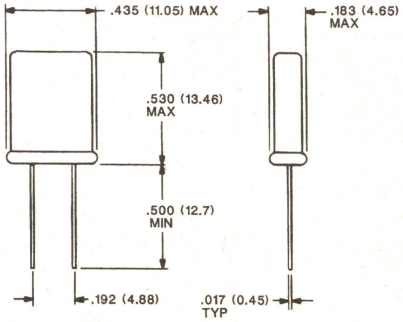

Diagram 196

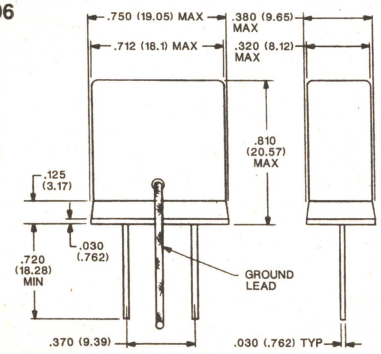

Diagram 197

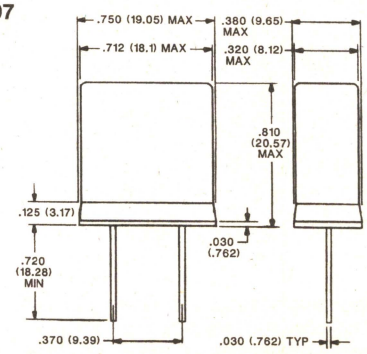

INFRARED–LIGHT–EMITTING DIODES

The infrared–light–emitting diode emits radiation in the near infrared region when forward bias current (I_F) flows through the PN junction. The light output power (P_O) is a function of the drive current (I_F) and is measured in milliwatts (mW).

Infrared–light–emitting diodes are used together with photosensors.

PHOTOSENSORS

Silicon photosensors respond to the entire visible radiation range as well to the near infrared radiation range. The radiation response of a photosensor is a function of the material and the diffusion depth of the light–sensitive PN junction. All silicon photosensor (diodes, transistors, darlingtons, triacs) show the same basic radiation frequency response which peaks in the near infrared radiation range.

Photodiodes

Radiation falling at the PN junction will generate hole electron pairs which cause the carriers to move, thus causing a current flow (I_L). The power density of the radiation H (measured in mW/cm^2) determines the current flow, I_L. At zero radiation, a small leakage current, called dark current (I_D) will remain.

Phototransistors

The phototransistor is a light radiation controlled transistor. The collector base junction is enlarged and works as a reversed biased photodiode controlling the transistor. The collector current, I_L, depends on the radiation density (H) and the DC current gain of the transistor. Under dark condition, the transistor is switched off; the remaining leakage current, I_{CEO}, is called collector dark current.

Photodarlingtons

The photodarlington works on the same principle as a phototransistor. The collector base junction of the driver transistor is radiation sensitive and controls the driver transistor. The driver transistor controls the following transistor. The darlington configuration yields a high current gain which results in a photodetector with very high light sensitivity.

Phototriacs

The gate of the phototriac is radiation sensitive and triggers the triac at a certain specified radiation density (H). At dark condition, the triac is not triggered. The remaining leakage current is called peak blocking current (I_{DRM}). The device is bilateral and designed to switch AC signals.

OPTOISOLATORS

An optoelectronic isolator contains both an IRED and a photodetector in the same package, arranged so that the energy radiated from the IRED is efficiently coupled to the detector through a clear, isolating dielectric. An opaque material surrounds the dielectric and provides ambient light protection.

Since there is no electrical connection between input and output, and since gallium–arsenide emitters and silicon detectors cannot reverse their roles, a signal is able to pass through the isolator in one direction only. To a degree determined by the package input–output capacitance and dielectric characteristics, the device is unresponsive to common mode input signals and provides input circuitry protection from the output circuit environment. Ground loop preventions, DC level shifting, and logic control of high voltage power circuitry are therefore typical areas where isolators are very useful.

The measure of an isolator's ability to efficiently pass a desired signal is most commonly referred to as Current Transfer Ratio (CTR). It is dependent upon the radiative efficiency of the IRED, the spacing between the IRED and the detector, thew area and sensitivity of the detector, and the amplifying gain of the detector. It is subject to the nonlinearities (current, voltage, temperature) of both chips, causing a rather complex transfer function which should be evaluated closely when used at non–specified conditions.

The ability of an isolator to provide standoff protection is usually expressed as an Isolation Surge Voltage and is essentially a measure of the integrity of the package and the dielectric strength of the insulating materials.

SLOTTED COUPLERS/INTERRUPTERS

A slotted coupler consists of a gallium arsenide infrared emitting diode facing a silicon photodetector in a molded plastic housing. A slot in the housing between the emitter and the detector provides a means of interrupting the signal. NTE offers several popular standard housings.

DISCRETE LED INDICATORS

NTE Type No.	Description and Application	Diag. No.	Qty Per Bag	Ind Pkg Size	Typical Viewing Angle (°)	Viewed Color	Typical Luminous Intensity (mcd) I_V	Typical Forward Voltage Drop (Volts) V_F	Maximum Reverse Breakdown Voltage (Volts) V_R	Maximum DC Forward Current (mA) I_F	Maximum Power Dissipation (mW) P_D
3000	Indicator lights, Diagnostic & panel displays, Printed circuit board indicators, Miniature-low profile package	133	4	T–3/4	80	Clear Red	1.4	1.65	5	40	80
3001		133	4	T–3/4	80	Diffused Red	1	1.65	5	40	80
3002		133	2	T–3/4	80	Clear Yellow	1	2.1	5	35	105
3003		133	2	T–3/4	80	Clear Green	1	2.2	5	35	105
3004	Diagnostic or Indicator lights in low–power/low–current environments, MOS compatible, Compatible with integrated circuits	134	2	T–3/4	25	Red	0.5	1.6	5	35	105
3007	General purpose indicators, Developmental projects, Breadboards	135	4	T–1	70	Red	1.6	1.6	5	50	100
3008		135	2	T–1	90	Bright Red	5	2.5	5	50	100
3009		135	2	T–1	90	Orange	5	2	5	35	105
3010		135	2	T–1	90	Green	1	2.2	5	35	105
3011		135	2	T–1	90	Yellow	4	2.1	5	35	105
3012	Panel circuit indicators, Low drive power, High intensity visible light emission	136	4	–	30	Diffused Red	1.5	2.2	4	35	100
3013		137	4	–	20	Clear Red Jewel	1.7	2.2	4	35	100
3014		136	2	–	35	Clear Green	3	2.15	4	45	125
3015		137	2	–	25	Clear Green Jewel	1.8	2.15	4	45	125
3016	Milk white diffused lens, Two–color panel circuit indicator, Fast response time, Capable of pulse operation	138	2	–	90	Red or Green High Intensity	0.6	2.1	4	25	75
3018	Instruments, Printed circuit board indicators, Board-mounted panel display	139	2	T–1 3/4	90	Soft Red	1.6	1.65	5	100	180
3019		139	2	T–1 3/4	60	Soft Red	3	1.65	5	100	180
3020	Computers, General purpose indicators, Instruments, Test systems, Mini and Microprocessors, Process contol led industrial systems, Sorting machines, Assembly equipment, Vending machines, Telephone equipment, Backlight panels. High intensity indicators in four colors	140	2	T–1 3/4	80	Diffused Red	1.7	1.7	5	100	180
3021		140	2	T–1 3/4	65	Diffused Yellow	8	2.1	5	35	120
3022		140	2	T–1 3/4	65	High Eff Dif Red	9	2	5	35	120
3023		140	2	T–1 3/4	65	Diffused Orange	6	2	5	35	120
3024		140	2	T–1 3/4	65	Diffused Green	3.5	2.2	5	35	120
3025	Instruments, Printed circuit board indicators, Board-mounted panel displays	141	2	T–1 3/4	40	Red	3	1.8	5	100	180
3026	Polarity indication Tri–State indicator, Flow direction display, Instruments, Tester displays, educational aids	144	1	–	50	Red or Green	1.5–R	1.65–R	–	70–R	200
							0.5–G	2.2–G	–	35–G	
3030	Blinking LED, Pulse rate 3Hz	383	1	T–1 3/4	40	Diffused Red (Blinking)	1.6	5	–	20	–

See Diagrams, beginning on Page 1–112

NTE Type No.	Description and Application	Diag. No.	Qty Per Bag	Ind Pkg Size	Typical Viewing Angle (°)	Viewed Color	Typical Luminous Intensity (mcd)	Typical Forward Voltage Drop (Volts)	Maximum Reverse Breakdown Voltage (Volts)	Maximum DC Forward Current (mA)	Maximum Power Dissipation (mW)
							I_V	V_F	V_R	I_F	P_D
3130	Blinking LED, Pulse rate 3Hz	383	1	T–1 3/4	30	Yellow Blinking	3	5.25 Max	0.4	20	–
3131	Blinking LED, Pulse rate 3Hz	383	1	T–1 3/4	30	Green Blinking	2	5.25 Max	0.4	20	–
3160	Rectangular LED's designed for Level meter displays, Bar graph displays, Instrumentation and general purpose applications	166	5	–	50	Diffused Red	0.4	1.9	3	25	70
3161		166	5	–	50	Diffused Green	0.7	2.1	3	25	70
3162		166	5	–	50	Diffused Yellow	2	2.1	3	25	70
3163		167	5	–	50	Diffused Red	0.4	1.9	3	25	70
3164		167	5	–	50	Diffused Green	0.7	2.1	3	25	70
3165		167	5	–	50	Diffused Yellow	1	2.1	3	25	70
3166		168	5	–	50	Diffused Red	0.4	1.9	3	25	70
3167		168	5	–	50	Diffused Green	0.8	2.1	3	25	70
3168		168	5	–	50	Diffused Yellow	2	2.1	3	25	70
3169	Square LED lamp suitable for Segment Display Elements	407	5	–	150	Dif Bright Red	0.5	2.8 Max	5	15	45
3170	Square LED lamp suitable for Segment Display Elements	407	5	–	150	Diffused Green	1.8	2.8 Max	5	30	100
3171	Square LED lamp suitable for Segment Display Elements	407	5	–	150	Diffused Yellow	1.4	2.8 Max	5	20	65
3180	Universal Rectangular Bar (Surface Mount)	417	2	–	100	High–Eff Red	9.8	2.1	5	25	75
3181	Universal Rectangular Bar (Surface Mount)	417	2	–	100	Diffused Green	9.8	2.1	5	25	75
3182	Universal Rectangular Bar (Surface Mount)	417	2	–	100	Diffused Yellow	9.0	2.1	5	25	75

DISCRETE LED SELECTING MADE EASIER

THEORY

Although light emission from a semiconductor junction had long been speculated, the first commercial devices did not become available until about 1963. This light emission phenomenon can be explained in terms of Semiconductor Energy–Band Theory. An external voltage applied to forward–bias a PN junction excites the majority carriers (electrons), causing them to move from the N–side Conduction Band to the P–side Valence Band. In making this transition the electrons cross the Energy Gap, E_g, that separates the two Bands, and so have to give up energy in the form of heat (phonons) and light (photons).

ELECTRICAL CONSIDERATIONS

Most incandescents are rated in terms of voltage; LED's, on the other hand, are current–dependent devices since they are basically diodes. When operating from constant–voltage sources, protection should be provided by incorporating a current–limiting resistor with each LED.

Basic DC Circuit

For the simple circuit shown below the resistor value can be calculated from

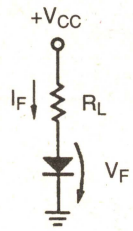

$$R_L = \frac{V_{CC} - V_F}{I_F}$$

where V_F and I_F are taken from an LED Data Sheet. The power rating required for the resistor should also be kept in mind.

See Diagrams, beginning on Page 1–112

AC Operation

LED's should be operated in the forward direction only. Therefore, the LED circuit must provide reverse–voltage protection if applied voltage is expected to exceed the V_R maximum rating of the LED. The example below shows a circuit having an ordinary silicon diode (e.g., NTE519) placed "back–to–back" with the LED.

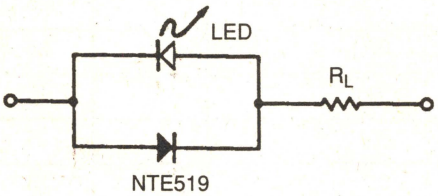

OPTICAL CONSIDERATIONS

Lens Effects

Lenses of the earliest LED's were designed to pass maximum light in the forward direction, i.e., perpendicular to the mounting surface. Later LED's produced more light and their lenses were designed to spread light over a wider area, thus permitting broader observer viewing angles. Still later, as higher light output LED's became available, a variety of red–colored, epoxy lenses came into use. These lenses act to diffuse light into a broader apparent emitting area. LED lenses that produce a broad, evenly–diffused light are generally assumed to be more pleasing to the eye than the lenses that produce a highly–intense point of light.

Colors

LED's are now available in various colors. In some applications the designer may be called upon to develop circuits in which LED's of different colors are to produce equal Brightness. Since light output from an LED is basically a function of current flow through the PN junction, equal Brightness can be achieved by adjustments of current flow.

Infrared LED Sources

Visible–emitting LED's, the vital link in the man–machine interface, are characterized in terms of Photometric quantities. On the other hand, infrared–emitting LED's (whose invisible light is of wavelengths longer than 750 nanometers) are characterized in terms of Radiometric quantities. Also, applications requirements for infrared LED sources are different from those for visible–emitting LED's. Whereas for visible–emitting LED's a wide viewing angle is normally important, for infrared sources a narrow beam width and high on–axis intensity are normally important.

5–LAMP LED ARRAYS

NTE Type Number	Diagram Number	Viewed Color	Electrical Characteristics Per Lamp					
			Typical Forward Voltage (Volts)	Maximum Reverse Voltage (Volts)	Maximum Forward Current (mA)	Typical Luminous Intensity (mcd)	Peak Emission Wavelength (nm)	Power Dissipation (Watts)
			V_F	V_R	I_F	I_V	λp	P_D
3150	164	Diffused Red	1.9	3	25	0.4	700	70
3151	164	Diffused Green	2.1	3	25	0.7	565	70
3152	164	Diffused Yellow	2.1	3	25	1.5	585	70
3153	165	Diffused Red	1.9	3	25	0.4	700	70
3154	165	Diffused Green	2.1	3	25	0.7	565	70
3155	165	Diffused Yellow	2.1	3	25	1.5	585	70

See Diagrams, beginning on Page 1–112

INFRARED EMITTING DIODES

NTE Type Number	Description	Diagram Number	Typical Total External Radiated Power (mW)	Maximum Forward Voltage (Volts)	Reverse Voltage (Volts)	DC Forward Current (mA)	Power Dissipation (mW)	Typical Peak Emission Wavelength (nm)	Typical Response Time (ns)
			P_O	V_F	V_R	I_F	P_D	λp	t_{on}, t_{off}
3005	PN Gallium Arsenide	147	550µW	1.5	3	50	75	900	10
3027	PN Gallium Arsenide	144	1	1.5	5	100	150	950	400
3028	PN Gallium Arsenide	145	650µW	1.5	3	150	250	900	50
3029A	PN Gallium Arsenide	504a	2.5	1.8	6	50	150	940	1000
3099	Bi–Directional	460	2	1.5	6	50	75	950	–
30001	Bi–Directional	460	2	1.5	6	50	75	950	–

INFRARED DETECTOR DIODES

NTE Type Number	Description	Diagram Number	Reverse Voltage (Volts)	Maximum Dark Current (nA)	Minimum Light Current (µA)	Power Dissipation (mW)	Rise Time (ns)	Typical Detection Angle (°)	Typical Peak Emission Wavelength (nm)
			V_R	I_D	I_L	P_D	t_r		λp
3033	Infrared Pin Photodiode	437	30	50	35	100	50	65	900

PHOTOTRANSISTOR DETECTORS

NTE Type Number	Description	Diagram Number	Collector to Base Voltage (Volts)	Maximum Collector Current (mA)	Maximum Collector Dark Current at 25°C (nA)	Minimum Light Current (mA)	Maximum Power Dissipation at 25°C (mW)	Typical Response Time (µs)	Package
			BV_{CBO}	I_C	I_D	I_L	P_D		
3031	NPN, Si, Visible and IR	148	30 (V_{CEO})	40	100 @ 10V V_{CE}	1	150	6	TO46 Flat Lens
3032	NPN, Si, Visible and IR	149	80	40	20 @ 5V V_{CE}	12	200	2	TO46 Dome Lens
3034A	NPN, Si, Photo/Light Detector	504b	30 (V_{CEO})	–	100 @ 10V V_{CE}	100µA @ 5V	150	–	–
3035A	NPN, Si, Photo Darlington	504b	60 (V_{CEO})	–	100 @ 10V V_{CE}	5 @ 5V	150	–	–
3036	NPN, Si, Darlington Visible & Near IR	151	50	250	100	12	250	151	TO18 Dome Lens
3037	NPN, Si, Visible and IR	151	50	50	200 @ 30V V_{CE}	10 @ 3V	150	2	TO18 Dome Lens
3038	NPN, Si, Visible	174	25	20	500 @ 10V V_{CE}	5 @ 3V	50	1.5	–
3120	NPN, Si, Phototransistor	505	20 (V_{CEO})	30	1µA @ 10V V_{CE}	1 Typ	100	10 Max	–

PHOTON COUPLED INTERRUPTER MODULE

NTE Type No.	Output Transistor Configuration	Diag. No.	Maximum Emitter Specifications			Maximum Detector Specifications				Typical Switching Speeds	
			Reverse Breakdown Voltage (Volts)	Forward Current (mA)	Forward Voltage Drop (Volts)	Collector Emitter Voltage (Volts)	Collector Current (mA)	Collector Dark Current (nA)	Total Power Dissipation (mW)	Turn–On Time (µs)	Turn–Off Time (µs)
			$V_{(BR)R}$	I_F	V_F @ I_F	V_{CEO}	I_C	I_{CEO}	P_D	t_{on}	t_{off}
3100	NPN Transistor	399	6	60	1.7	55	100	100	250	8	50
3101	NPN Darlington	399	6	60	1.7	55	100	100	250	7	45
3102	NPN Transistor	400	6	60	1.7	55	100	100	250	8	50
3103	NPN Darlington	400	6	60	1.7	55	100	100	250	7	45

Note: All units feature 1mm aperture.

All NTE Photon Coupled Interrupter Modules are manufactured using a gallium arsenide emitting diode coupled to a silicon phototransistor or darlington. The gap in the housing provides a means of interrupting the signal with an opaque material thereby switching the output from an "ON" into an "OFF" state.

See Diagrams, beginning on Page 1–112

PHOTOTHYRISTOR OUTPUTS

NTE Type No.	Output Configuration	Diag. No.	Total Device Ratings		Maximum LED Ratings			Maximum Photothyristor Ratings					
			Isolation Voltage Surge (Volts)	Total Power (mW)	Forward Current (mA)	Forward Voltage (Volts)	Reverse Voltage (Volts)	Blocking Voltage (Volts)	Gate Trigger Voltage (Volts)	On Voltage @ I_T (Volts)	Gate Trigger Current (μA)	Turn–On Current (Threshold) (mA)	Holding Current (mA)
			V_{ISO}	P_T	I_F	V_F	V_R	V_{DRM}	V_{GT}	V_{ON}	I_{GT}	I_{FT}	I_{Hold}
3046	SCR	152b	3550	290	60	1.5	3	400	1	1.3 @ 100mA	100	14	0.5
3047	TRIAC	152e	7500	330	50	1.5	3	250	–	3 @ 100mA	–	15	100μA Typ
3048	TRIAC	152e	7500	330	50	1.5	3	400	–	3 @ 100mA	–	15	100μA Typ
3049	Zero Crossing TRIAC Driver	152d	7500	330	50	1.5	3	250	–	3 @ 100mA	–	15	100μA Typ
3091	SCR	152b	3535	400	60	1.5	6	400	–	1.3 @ 300mA	–	11	–
3097	Zero Crossing TRIAC Driver	152d	7500	330	50	1.5	6	400	–	3 @ 100mA	–	15	0.2

PHOTOTRANSISTOR OUTPUTS

NTE Type No.	Output Configuration	Diag. No.	Total Device Ratings			Maximum LED Ratings			Maximum Phototransistor Ratings		
			Isolation Voltage Surge (Volts)	Total Power (mW)	DC Current Transfer Ratio* (%)	Forward Current (mA)	Forward Voltage (Volts)	Reverse Voltage (Volts)	Collector to Base Voltage (Volts)	Collector to Emitter Voltage (Volts)	Collector Dark Current (nA)
			V_{ISO}	P_T	C_{TR}	I_F	V_F	V_R	BV_{CBO}	BV_{CEO}	I_C
3040	NPN Transistor	152a	7500	250	20	80	1.5	3	70	30	100
3041	NPN Transistor	152a	7500	300	100	60	1.5	6	70	30	50
3042	NPN Transistor	152a	7500	250	20	60	1.5	3	70	30	50
3043	NPN Transistor	152a	3550	260	70	60	1.5	3	70	80	50
3044	NPN Darlington	152c	7500	250	300	80	2.0	3	–	80	1000
3045	NPN Darlington	152c	7500	250	500	80	2.0	3	–	80	1000
3081	NPN Transistor	179a	6000	250	20	60	1.7	4	–	30	100
3082	NPN Darlington	179b	6000	250	400	60	1.7	4	–	30	100
3083	NPN Darlington	152f	7500	250	200	60	1.5	3	–	30	100
3084	NPN Darlington	152f	7500	250	100	60	1.5	3	–	55	100
3086	NPN Dual Transistor	401a	7500	400	50	60	1.5	3	–	30	100
3088	HV NPN Transistor	152a	7500	300	20	60	1.5	6	300	300 (V_{CER})	100
3089	AC Input NPN Transistor	152i	7500	250	20	60	1.5	–	70	30	100
3096	Low LED Drive NPN Transistor	152a	7500	300	50 @ I_F = 1mA	60	1.4	6	70	30	25
3098	NPN Transistor	483a	5000	200	100	50	1.3	5	–	55	100

* The DC Current Transfer Ratio (C_{TR}) is the output transistor collector current divided by the LED forward current (I_C/I_F).

See Diagrams, beginning on Page 1–112

SCHMITT TRIGGER OUTPUTS

NTE Type No.	Output Configuration	Diag. No.	Total Device Ratings		Maximum LED Ratings			Output Ratings				
			Isolation Voltage Surge (Volts)	Total Power (mW)	Forward Current (mA)	Forward Voltage (Volts)	Reverse Voltage (Volts)	Voltage Range (Volts)	Output Voltage (Volts)	Output Current (mA)	Turn–On Time (µs)	Turn–Off Time (µs)
			V_{ISO}	P_T	I_F	V_F	V_R	V_{CC}	V_O	I_O	t_{on}	t_{off}
3090	Schmitt Trigger	152h	7500	250	60	1.5	6	3V to 15V	16 Max	50 Max	1.2 Typ	1.2 Typ

DESCRIPTION:

The NTE3090 consists of a gallium arsenide IRED optically coupled to a high–speed integrated detector with Schmitt Trigger outputs. Designed for applications requiring electrical isolation, fast response time, noise immunity and digital logic compatability such as interfacing computer terminals to peripheral equipment, digital control of power supplies, motors and other servo machine applications.

PHOTON COUPLED BILATERAL ANALOG FET OUTPUTS

NTE Type No.	Output Configuration	Diag. No.	Total Device Ratings		Maximum LED Ratings			Photo FET Ratings				
			Isolation Voltage Surge (Volts)	Total Power (mW)	Forward Current (mA)	Forward Voltage (Volts)	Reverse Voltage (Volts)	Drain to Source Breakdown Voltage (Volts)	Drain Current (mA)	On–State Resistance (Ω)	Turn–On Time (µs)	Turn–Off Time (µs)
			V_{ISO}	P_T	I_F	V_F	V_R	BV_{DSS}	I_D	RDS_{on}	t_{on}	t_{off}
3085	Bilateral Analog FET	152g	2500	300	60	1.75	60	±30	±100	200	15	15

DESCRIPTION:

The NTE3085 consists of a gallium arsenide infrared emitting diode coupled to a symmetrical bilateral silicon photo detector. The detector is electrically isolated from the input and performs like an ideal isolated FET designed for distortion–free control of low level AC and DC analog signals.

TTL COMPATIBLE PHOTO COUPLED LOGIC GATE OUTPUTS

NTE Type No.	Output Configuration	Diag. No.	Total Device Ratings		Maximum LED Ratings			Maximum Output Ratings			
			Isolation Voltage Surge (Volts)	Total Power (mW)	Forward Current (mA)	Forward Voltage (Volts)	Reverse Voltage (Volts)	Supply Voltage (Volts)	Enable Voltage (Volts)	Output Current (mA)	Propagation Delay Time (ns)
			V_{ISO}	P_T	I_F	V_F	V_R	V_{CC}	V_E	I_O	t_{PLH}/t_{PHL}
3087	High Speed,Open Collector, NAND Gate	401b	3000	100	10	1.75	5	5	5.5	50	75
3092	Open Collector, NPN Transistor	401e	3000	100	25	1.70	5	15	–	8	0.8µs
3093	NPN Split Darlington	401d	3000	100	20	1.70	5	18	–	60	5µs
3094	Dual High Speed Open Collector, NAND Gate	401f	3000	60	15 (Per Ch)	1.75	5 (Per Ch)	5	–	16 (Per Ch)	75
3095	Dual Open Collector, NPN Transistors	401c	3000	35 (Per Ch)	25 (Per Ch)	1.70	5 (Per Ch)	15	–	8	0.8µs

See Diagrams, beginning on Page 1–112

NTE Type Number	Description	Diagram Number	Color	Digit Description	Maximum Forward Current Per Segment (mA) I_F	Maximum Reverse Voltage Per Segment (Volts) V_R	Maximum Power Dissipation (mW) P_T
3050	0.270 Inch, Seven Segment, Common Anode, LHDP	153	Red	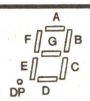	30	10	750
3051	0.270 Inch, Polarity and Overflow, Common Anode	154	Red		30	10	480
3052	0.300 Inch, Seven Segment, Common Anode, RHDP	155a	Red		30	5	700
3053		155a	Orange		20	3	400
3054		155a	Green		20	3	400
3055		155a	Yellow		20	3	400
3056	0.300 Inch, Seven Segment, Common Cathode, RHDP	155b	Red		30	6	480
3057		155c	Red		25	3	700
3058		155b	Orange		20	6	600
3059		155b	Green		20	6	480
3060		155b	Yellow		20	6	600
3061	0.300 Inch, Seven Segment, Common Anode, LHDP	156	Red		30	6	480
3062		156	Orange		20	6	600
3063		156	Green		20	6	480
3064		156	Yellow		20	6	600
3065	0.300 Inch, Polarity and Overflow, Common Anode	157	Red		30	6	300
3068	0.400 Inch, Seven Segment, Common Anode, RHDP	158a	Red		30	6	480
3069	0.400 Inch, Seven Segment, Common Cathode, RHDP	158b	Red		30	6	480
3070	0.400 Inch, Seven Segment, Common Anode, RHDP	158a	Orange		30	6	600
3071	0.400 Inch, Seven Segment, Common Cathode, RHDP	158b	Orange		30	6	600
3074	0.560 Inch, 2 Digit, Common Anode, RHDP	159a	Red	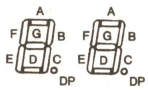	30	6	960
3075	0.560 Inch, 2 Digit, Common Cathode, RHDP	159b	Red		30	6	960
3076	0.560 Inch, Seven Segment, 1 Digit with Overflow and ±, Common Anode, RHDP	160a	Red	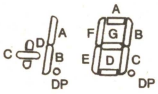	30	6	840
3077	0.560 Inch, Seven Segment, 1 Digit with Overflow and ±, Common Cathode, RHDP	160b	Red		30	6	840
3078	0.560 Inch, Seven Segment, Common Anode, RHDP	161a	Red		30	6	480
3079	0.560 Inch, Seven Segment, Common Cathode, RHDP	161b	Red		30	6	480
3080	0.800 Inch, Seven Segment, Common Anode, RHDP	162	Red		30	6	600

LHDP – Left Hand Decimal Point RHDP – Right Hand Decimal Point

See Diagrams, beginning on Page 1–112

LED DISPLAY OUTLINES

NTE3050

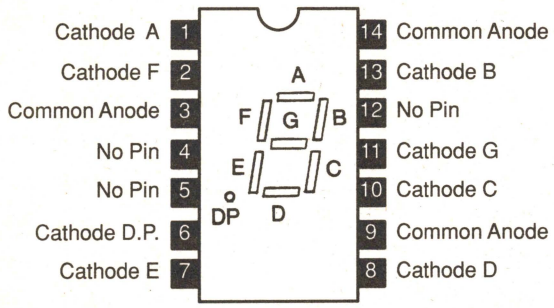

NTE3051

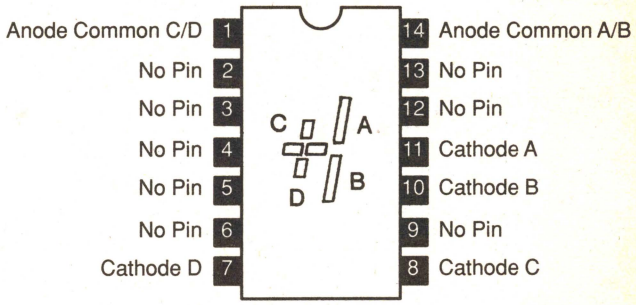

NTE3052, NTE3053
NTE3054, NTE3055

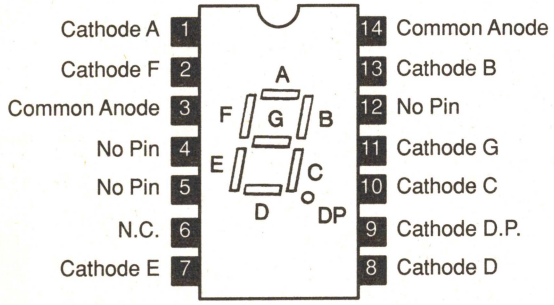

NTE3056, NTE3058
NTE3059, NTE3060

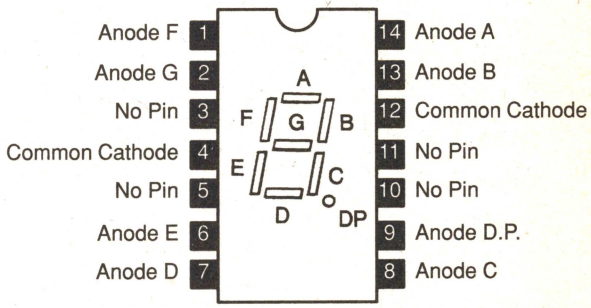

NTE3057

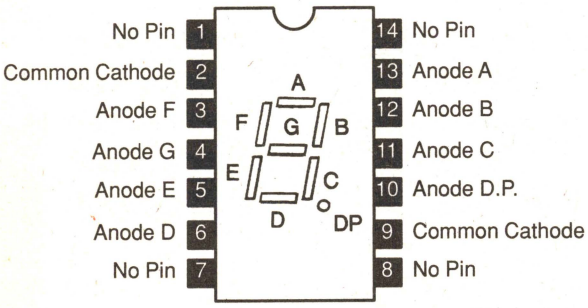

NTE3061, NTE3062
NTE3063, NTE3064

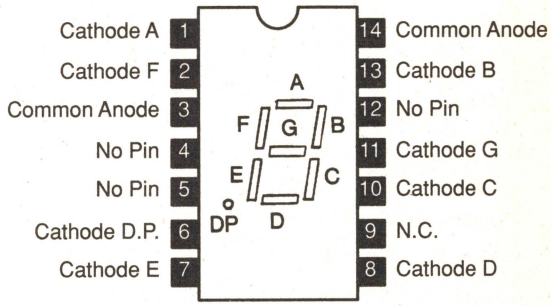

NTE3065

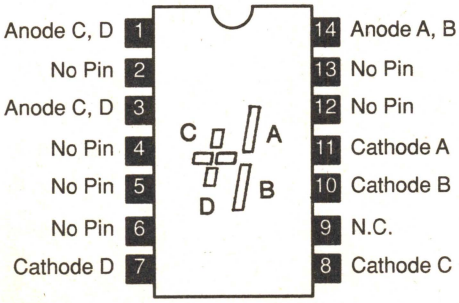

NTE3068, NTE3070

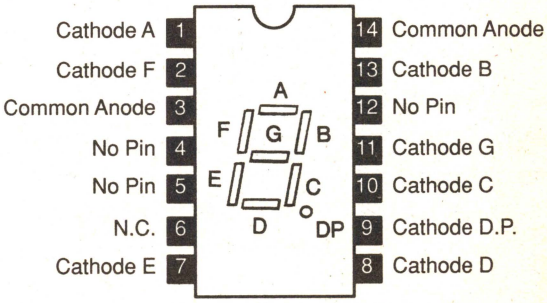

See Diagrams, beginning on Page 1–112

LED DISPLAY OUTLINES

NTE3069, NTE3071

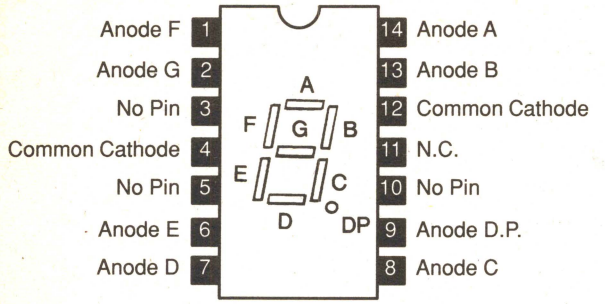

NTE3074

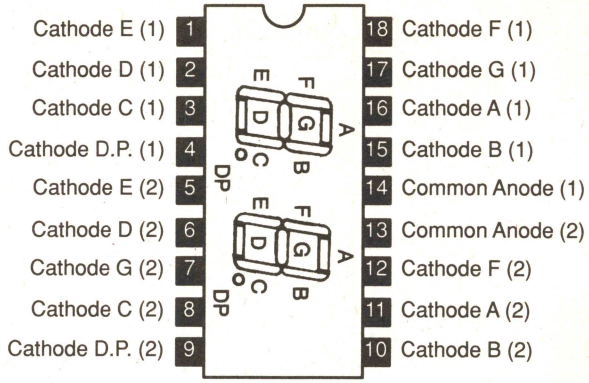

NTE3075

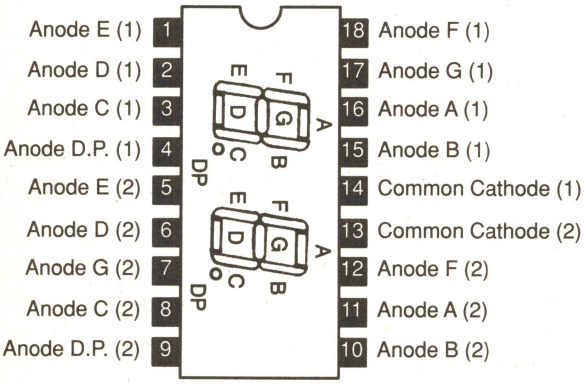

NTE3076

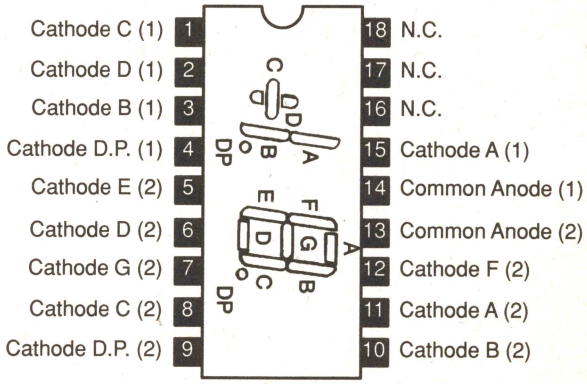

NTE3077

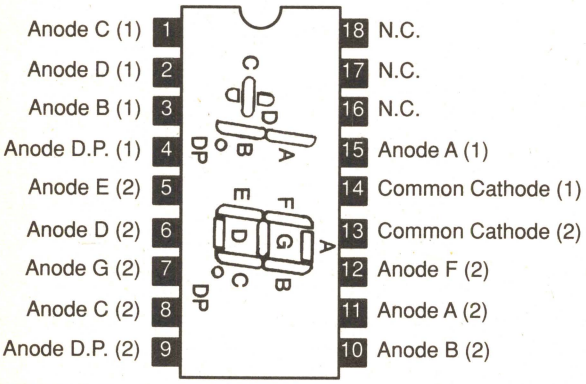

NTE3078

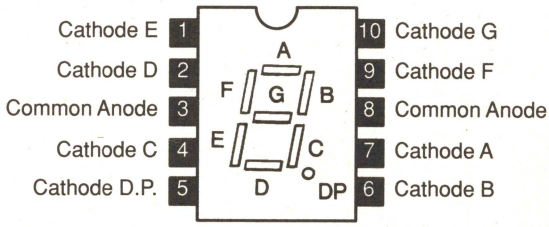

NTE3079

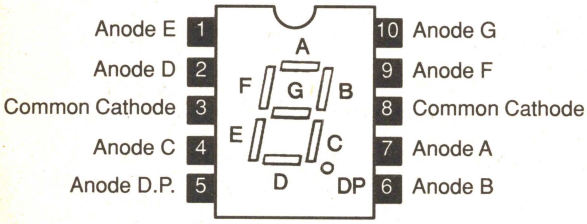

NTE3080

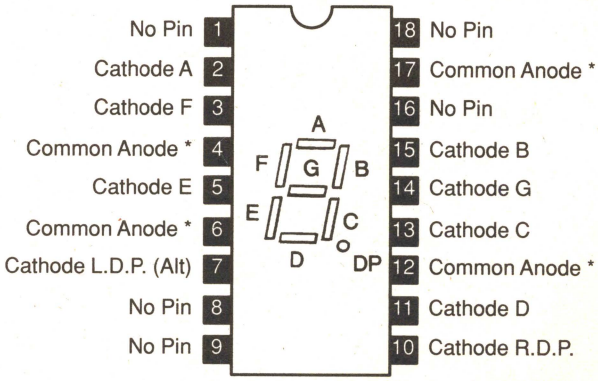

* Pins 4, 6, 12, and 17 are internally connected

See Diagrams, beginning on Page 1–112

BAR GRAPH DISPLAYS

NTE Type Number	Diagram Number	Viewed Color	Description	Characteristics Per Segment					
				Maximum Continuous Forward Current (mA)	Maximum Reverse Voltage (Volts)	Maximum Forward Voltage (Volts)	Typical Luminous Intensity (μcd)	Peak Emission Wavelength (nm)	Total Power Dissipation (mW)
				I_F	V_R	V_F	I_V	λp	P_D
3111	398	Red	5–Segment Common Anode	15	3	1.90 Typ	150	700	100
3112	398	Green	5–Segment Common Anode	20	3	2.05 Typ	200	565	200
3113	169	Red	9–Segment Common Anode	15	3	1.90 Typ	150	700	200
3114	169	Green	9–Segment Common Anode	20	3	2.05 Typ	300	565	300
3115	163	Hi–Efficiency Red	10–Segment Separate Anodes & Cathodes	30	6	3	510 Min	630	750
3116	163	Hi–Efficiency Green	10–Segment Separate Anodes & Cathodes	30	6	3	510 Min	562	750
3117	163	Yellow	10–Segment Separate Anodes & Cathodes	25	6	3	510 Min	585	750

DIMENSIONAL OUTLINE DRAWINGS

Diagram 163

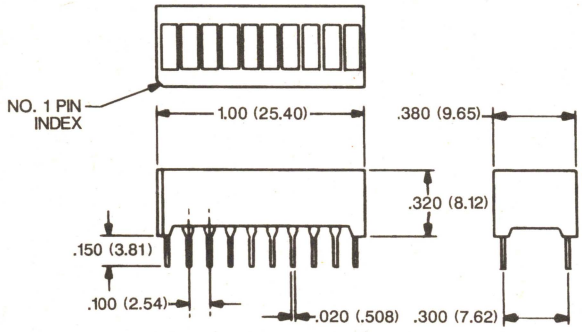

Pin	Output	Pin	Output
1	D1 Anode	11	D10 Cathode
2	D2 Anode	12	D9 Cathode
3	D3 Anode	13	D8 Cathode
4	D4 Anode	14	D7 Cathode
5	D5 Anode	15	D6 Cathode
6	D6 Anode	16	D5 Cathode
7	D7 Anode	17	D4 Cathode
8	D8 Anode	18	D3 Cathode
9	D9 Anode	19	D2 Cathode
10	D10 Anode	20	D1 Cathode

Diagram 169

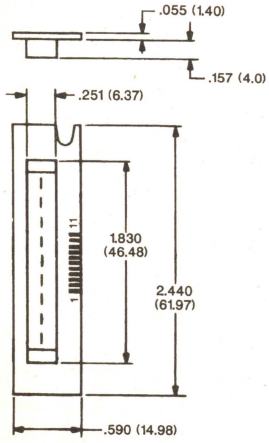

Pin	Output
1	Common Anode
2	D1 Cathode
3	D2 Cathode
4	D3 Cathode
5	D4 Cathode
6	D5 Cathode
7	D6 Cathode
8	D7 Cathode
9	D8 Cathode
10	D9 Cathode
11	Common Anode

Diagram 398

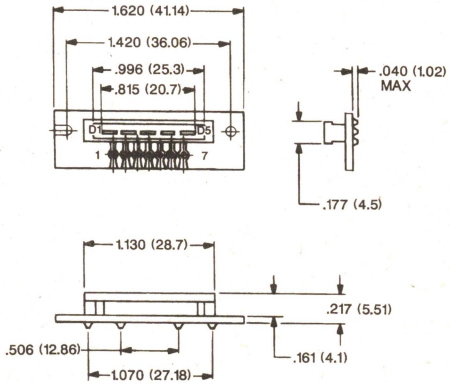

Pin	Output
1	Common Anode
2	D1 Cathode
3	D2 Cathode
4	D3 Cathode
5	D4 Cathode
6	D5 Cathode
7	Common Anode

DIMENSIONAL OUTLINE DRAWINGS

Diagram 133

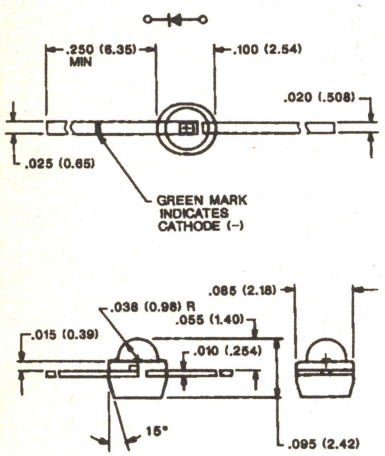

Diagram 134

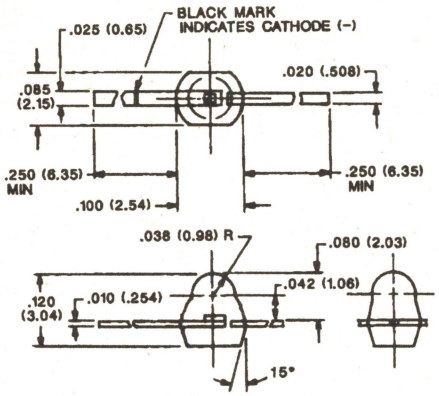

Diagram 135

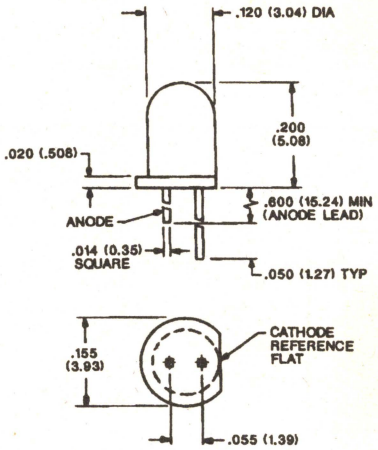

Diagram 136

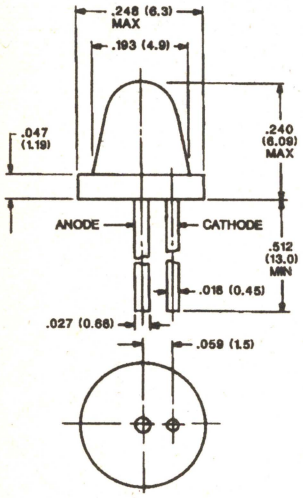

Diagram 137

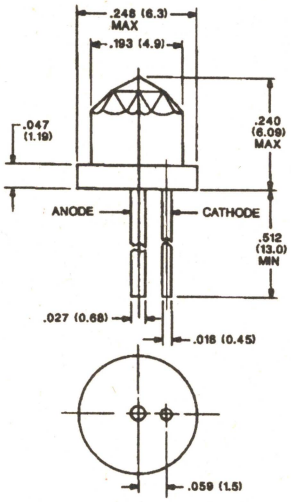

Diagram 138

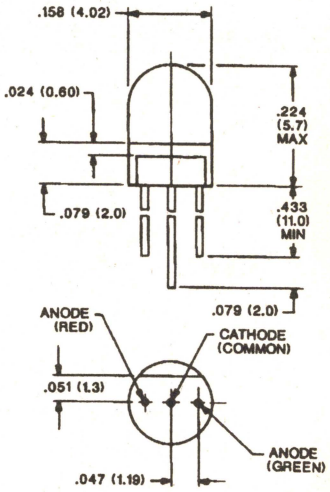

Diagram 139

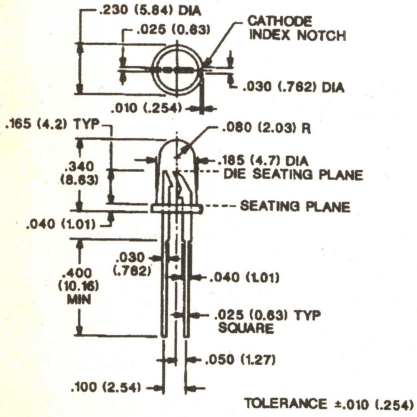

Diagram 140

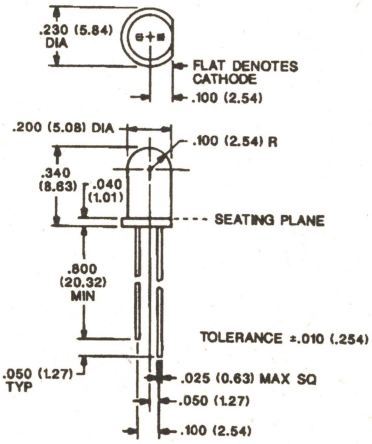

Diagram 141

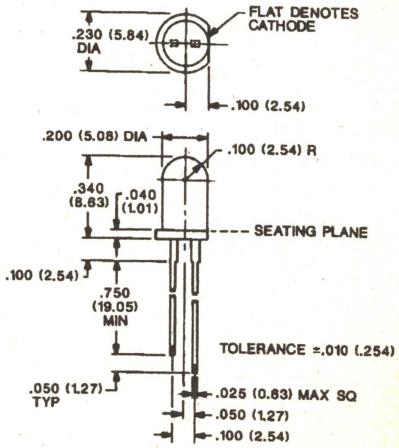

DIMENSIONAL OUTLINE DRAWINGS

Diagram 144

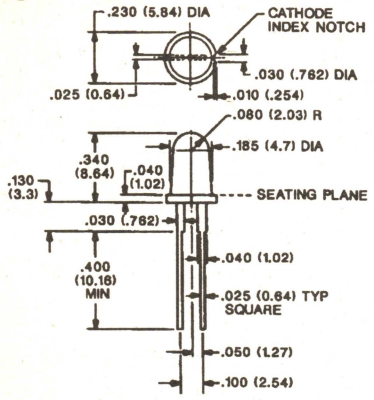

Diagram 145

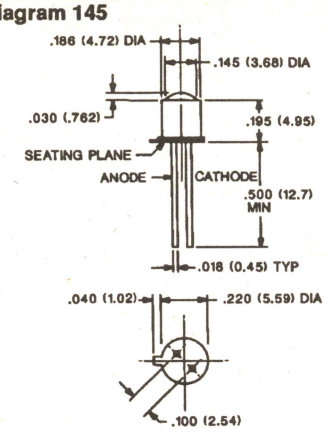

Diagram 147

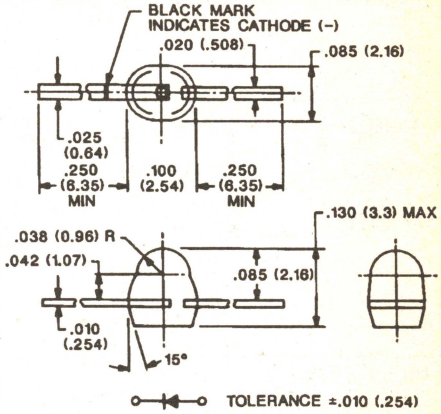

Diagram 148

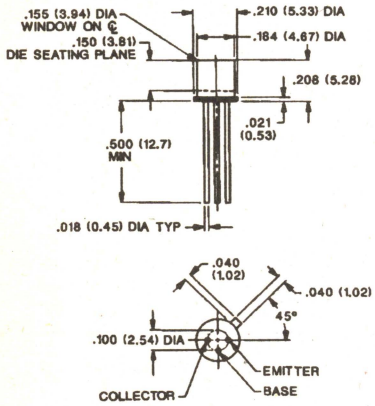

Diagram 149

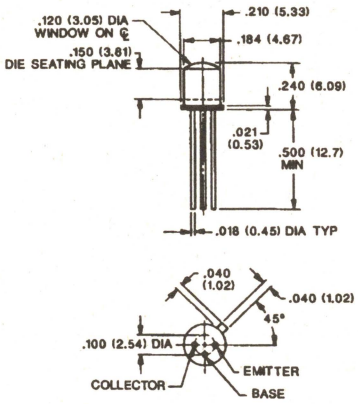

Diagram 151

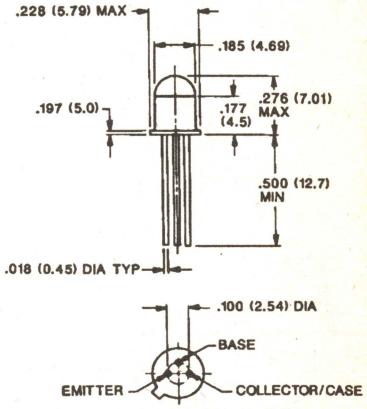

Diagram 152

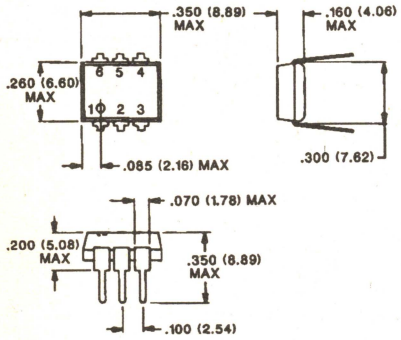

Diagram 152a

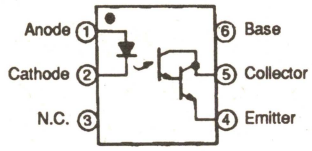

Diagram 152b

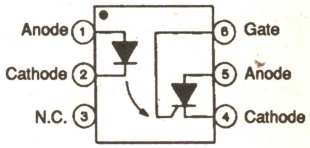

Diagram 152c

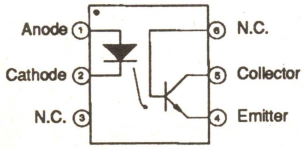

Diagram 152d

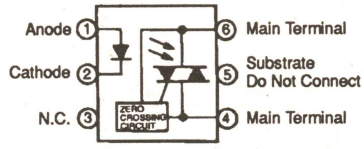

Diagram 152e

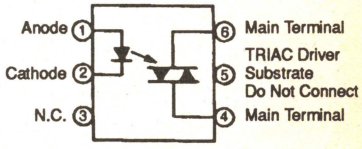

DIMENSIONAL OUTLINE DRAWINGS

Diagram 152f

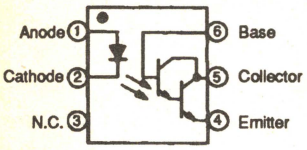

Diagram 152g

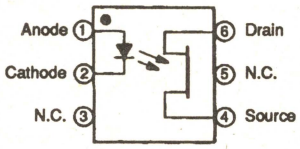

Diagram 152h

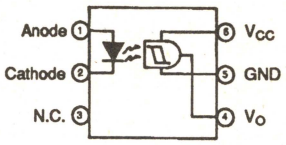

Diagram 152l

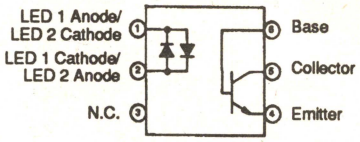

Diagram 153

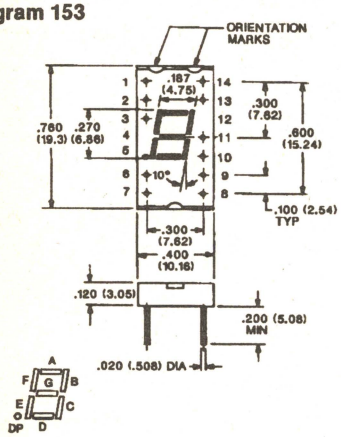

Diagram 154

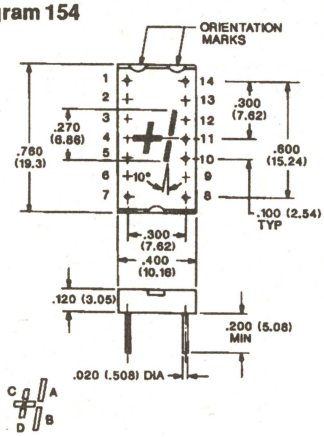

Diagram 155

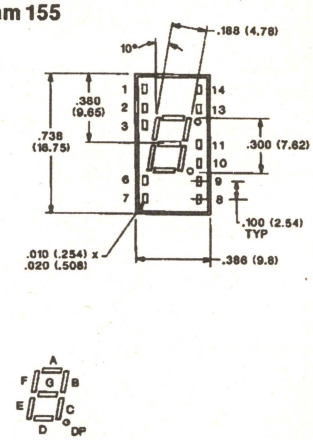

Diagram 156

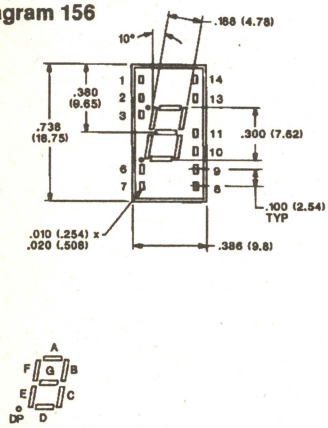

Diagram 157

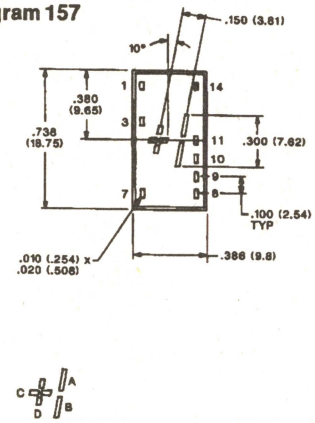

Diagram 158

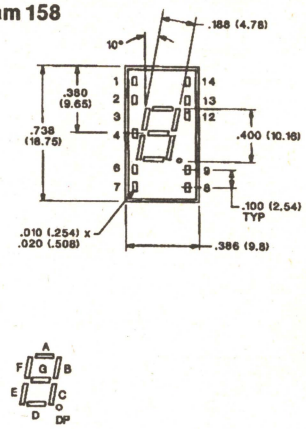

Diagram 159

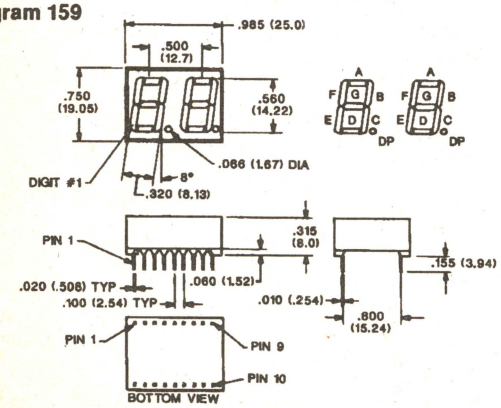

Diagram 160

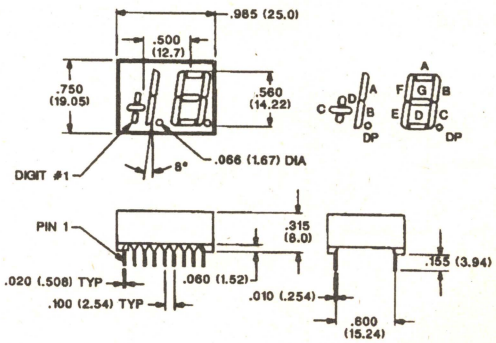

DIMENSIONAL OUTLINE DRAWINGS

Diagram 161

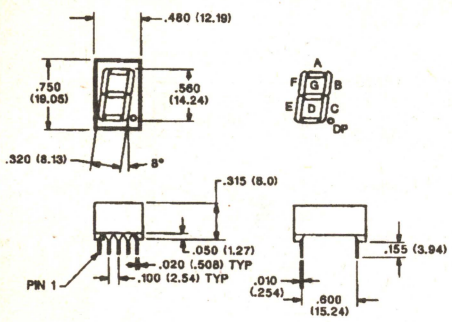

Diagram 162

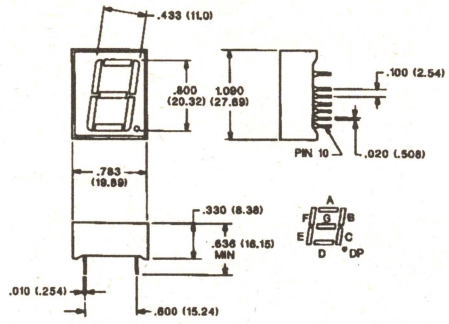

Diagram 164

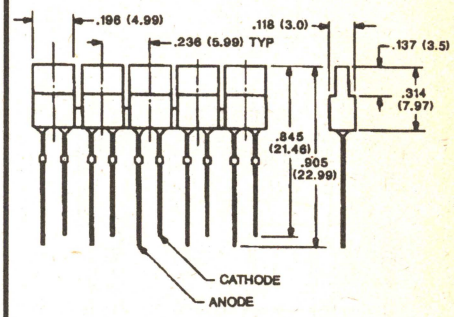

Diagram 165

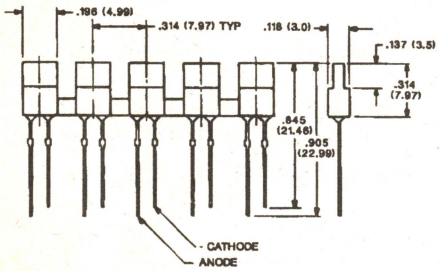

Diagram 166

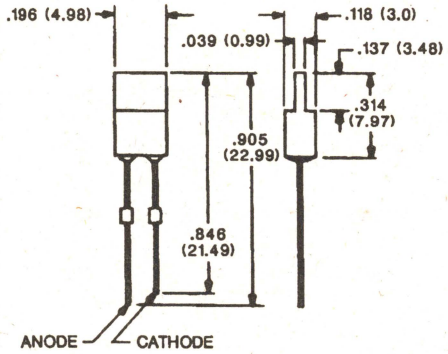

Diagram 167

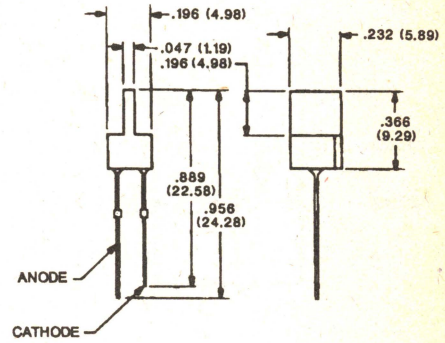

Diagram 168

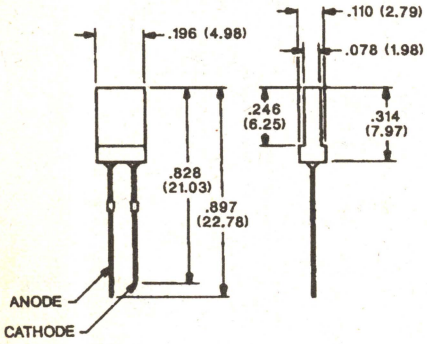

Diagram 174

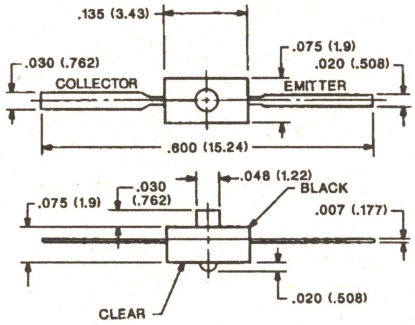

Diagram 179

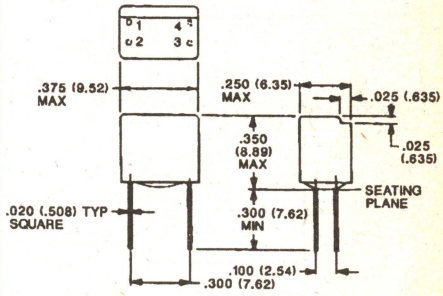

Diagram 179a

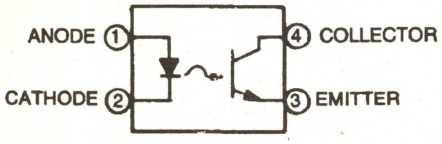

Diagram 179b

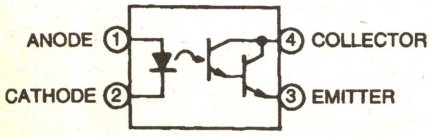

Diagram 383

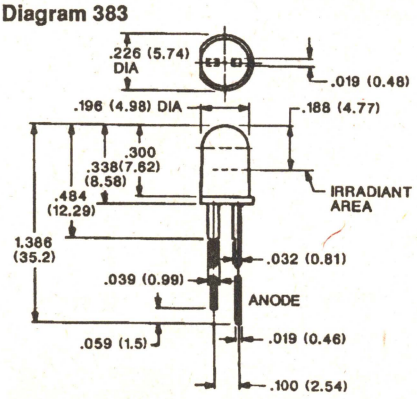

Diagram 399

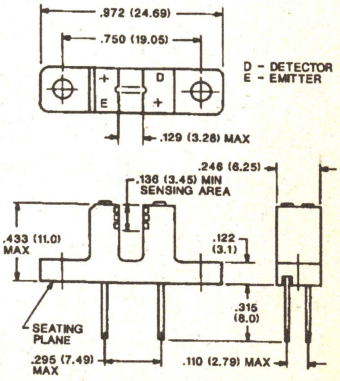

DIMENSIONAL OUTLINE DRAWINGS

Diagram 400

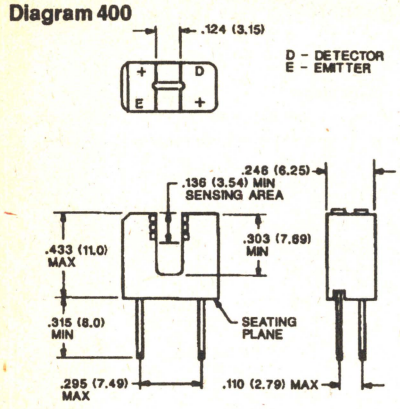

Diagram 401

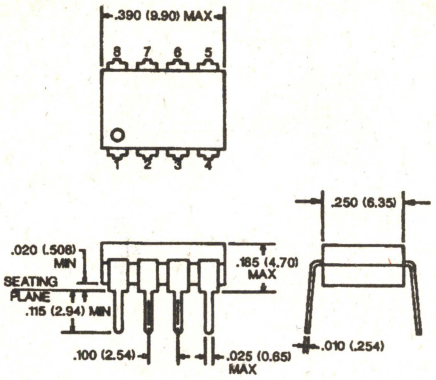

Diagram 401a

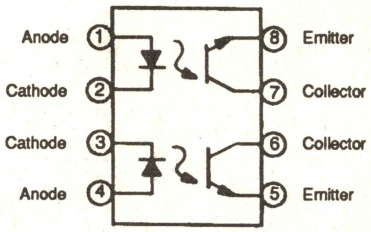

Diagram 401b

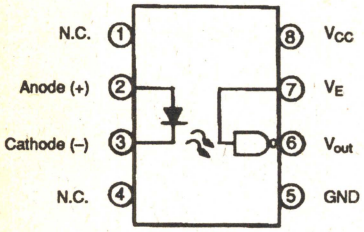

Diagram 401c

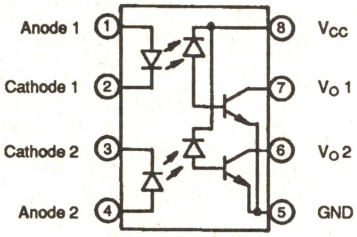

Diagram 401d

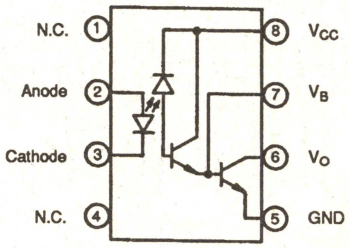

Diagram 401e

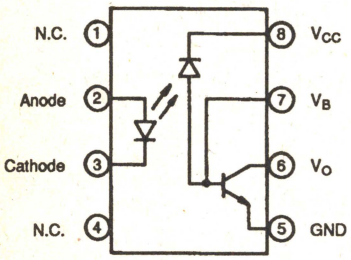

Diagram 401f

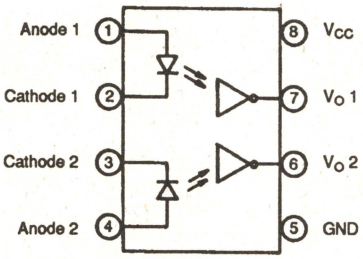

Diagram 407

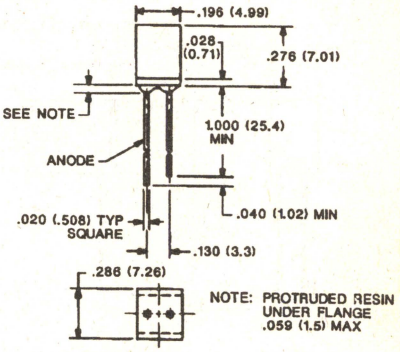

Diagram 417

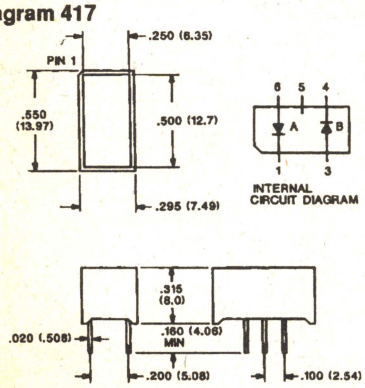

Diagram 437

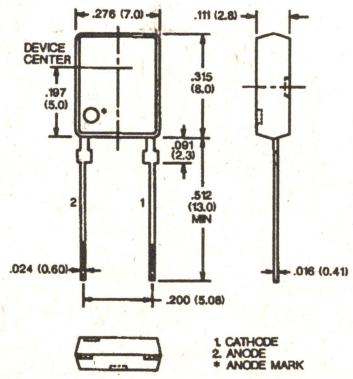

Diagram 460

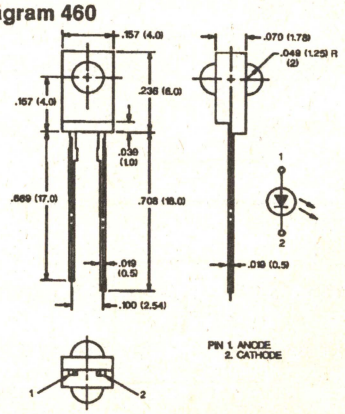

Diagram 483

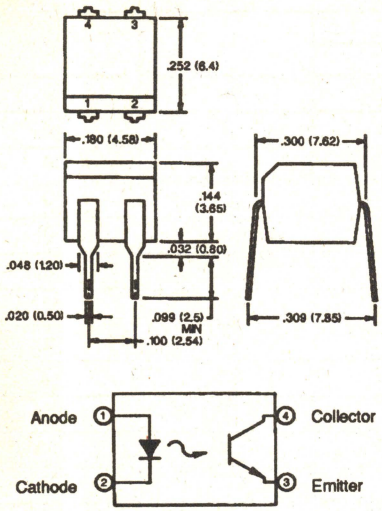

Diagram 504

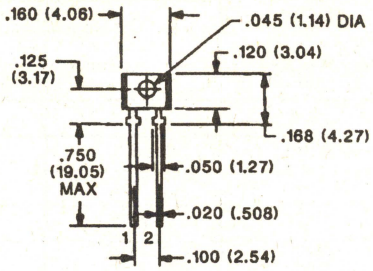

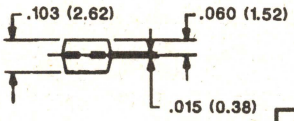

	1	2
a	K	A
b	E	C

Diagram 505

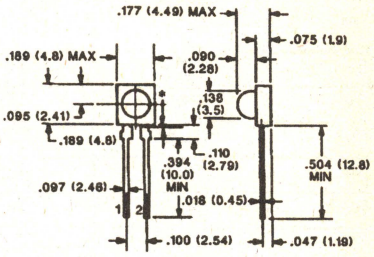

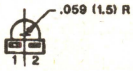

PIN 1. EMITTER
2. COLLECTOR
* NOT SOLDERED

POSITIVE, 3 TERMINAL, ARRANGED BY OUTPUT VOLTAGE

Regulated Voltage Out ±5% (Volts) V_{out}	NTE Type Number	Case Style	Diagram Number	Voltage In (Volts) V_{in} Min	Voltage In (Volts) V_{in} Max	Output Current (Amps) I_O	Power Dissipation (Watts) P_D
5V	**309K**	TO3	1c	7	30	1	50
5V	**1934**	TO3P	59b	8	45	2	50
5V	**1934X**	TO3P	59c	6	15	2	50
5V	**931**	TO3	1c	7.5	20	3	30
5V	**932**	TO3	1c	7.6	30	5	50
5V	**960**	TO220	11f	7	35	1	15
5V	**977**	TO92	9l	7	30	0.1	1
6V	**962**	TO220	11f	8	35	1	15
6.2V	**988**	TO92	9l	8.5	30	0.1	0.7
8V	**964**	TO220	11f	10.5	35	1	15
8V	**981**	TO92	9l	10.5	30	0.1	1
9V	**1902**	TO92	9l	11	30	0.1	0.8
10V	**1932**	TO220	11f	12.5	35	1.5	15
12V	**933**	TO3	1c	14.6	30	5	50
12V	**1912**	TO3	1c	14.5	30	3	30
12V	**1914**	TO3	1c	14	35	1.5	15
12V	**1936**	TO3P	59b	15	45	2	50
12V	**950**	TO92	9l	14.5	35	0.1	1
12V	**966**	TO220	11f	14.8	35	1	15
13.8V	**934**	TO3	1c	16.4	30	5	50
15V	**951**	TO92	9l	17.5	35	0.1	1
15V	**968**	TO220	11f	17.5	35	1	15
15V	**1916**	TO3	1c	17.4	40	1.5	20
15V	**1918**	TO3	1c	17.5	40	3	30
15V	**1938**	TO3P	59b	27	45	2	50
18V	**1920**	TO3	1c	20.4	35	1.5	15
18V	**958**	TO220	11f	21	35	1	15
18V	**1906**	TO92	9l	20	35	0.1	0.8
24V	**1924**	TO3	1c	26.4	35	1.5	15
24V	**972**	TO220	11f	27	40	1	15
24V	**1908**	TO92	9l	26	40	0.1	0.8
24V	**1940**	TO3P	59b	27	45	2	50

POSITIVE ADJUSTABLE, ARRANGED BY OUTPUT VOLTAGE

Adjustable Range of Regulated Voltage Output (Volts) V_{out}	NTE Type Number	Case Style	Diagram Number	Voltage In (Volts) V_{in} Min	Voltage In (Volts) V_{in} Max	Output Current (Amps) I_O	Power Dissipation (Watts) P_D
1.2V to 32V	**935**	TO3	1b	3	35	5	50
1.2V to 33V	**970**	TO3	1b	3	35	5	3
1.2V to 37V	**956**	TO220	11h	3	40	1.5	15
1.2V to 37V	**1900**	TO92	9q	3	43	0.1	0.625
2.85V to 36V	**1942**	TO220	205	8	40	2	Internally Limited
4.5V to 40V	**1928**	8–Lead Metal Can	200	8.5	50	0.045	0.450*
5V to 37V	**1930**	8–Lead DIP	245	9	40	0.025	0.450
5V to 30V	**953**	4–Lead Power Tab	308a	7.5	40	1	15

* Rating applies to ambient temperatures up to 70°C. Above 70°C ambient derate linerally at 6.25mW/°C for metal can.

See Diagrams, beginning on Page 1–121

VOLTAGE REGULATORS

NEGATIVE, 3 TERMINAL, ARRANGED BY OUTPUT VOLTAGE

Regulated Voltage Out ±5% (Volts)	NTE Type Number	Case Style	Diagram Number	Voltage In (Volts)		Output Current (Amps)	Power Dissipation (Watts)
V_{out}				V_{in}		I_O	P_D
				Min	Max		
–5V	**961**	TO220	11g	–7	–35	1	15
–5V	**1913**	TO3	1e	–7.1	–35	1.5	15
–5V	**1917**	TO92	9p	–7.3	–35	0.1	0.7
–6V	**963**	TO220	11g	–8	–35	1	15
–8V	**965**	TO220	11g	–10.5	–35	1	15
–12V	**967**	TO220	11g	–14.5	–35	1	15
–12V	**1903**	TO92	9q	–13.7	–35	0.1	0.7
–12V	**1915**	TO3	1e	–14.1	–35	1.5	15
–15V	**969**	TO220	11g	–17.5	–35	1	15
–15V	**1905**	TO92	9p	–16.7	–35	0.1	0.7
–15V	**1919**	TO3	1e	–17.1	–40	1.5	15
–18V	**959**	TO220	11g	–21	–35	1	15
–18V	**1907**	TO92	9q	–19.7	–35	0.1	0.7
–18V	**1923**	TO3	1e	–20.1	–40	1.5	15
–24V	**971**	TO220	11g	–27	–40	1	15
–24V	**1909**	TO92	9p	–27	–40	0.1	0.7
–24V	**1925**	TO3	1e	–26.1	–40	1.5	15

NEGATIVE ADJUSTABLE, ARRANGED BY OUTPUT VOLTAGE

Adjustable Range of Regulated Voltage Output (Volts)	NTE Type Number	Case Style	Diagram Number	Voltage In (Volts)		Output Current (Amps)	Power Dissipation (Watts)
V_{out}				V_{in}		I_O	P_D
				Min	Max		
–2.2V to –30V	**954**	4–Lead Power Tab	308b	–7.5	–40	1	15
–2.2V to –30V	**1927**	4–Lead TO3	414b	–7.5	–40	1	15
–1.2V to –37V	**957**	TO220	11i	–3	–40	1.5	15
–1.2V to –37V	**1901**	TO92	9q	–3	–40	0.1	0.625
–1.2V to –37V	**1911**	TO3	1d	–3	–40	1.5	20

PRECISION VOLTAGE REGULATORS

(0.01% LINE AND LOAD REGULATION)

POSITIVE OR NEGATIVE SUPPLY

Adjustable Range of Regulated Voltage Output (Volts)	NTE Type Number	Case Style	Diagram Number	Voltage In (Volts)		Output Current (Amps)	Power Dissipation (Watts)
V_{out}				V_{in}		I_O	P_D
				Min	Max		
±2V to ±37V	**923**	10–Lead Metal Can	201	9.5	40	0.15	0.8
±2V to ±37V	**923D**	14–Lead DIP	247	9.5	40	0.15	1

See Diagrams, beginning on Page 1–121

TV FIXED VOLTAGE REGULATORS

(POSITIVE)

Regulated Voltage Out (Volts) V_{out}	NTE Type Number	Case Style	Diagram Number.	Voltage In (Volts) V_{in} Min	Voltage In (Volts) V_{in} Max	Output Current (Amps) I_O	Power Dissipation (Watts) P_D*
41.8V ± 0.5V	**1840**	5–Lead SIP	453	90	145	2	27
41.8V ± 0.5V	**1894**	5–Lead SIP	453	–	500	1.2	27
41.8V ± 0.5V	**1895**	5–Lead SIP	453	–	550	1	27
41.8V ± 0.5V	**1796**	5–Lead SIP	453	–	900	0.5	27
115V ± 0.8V	**1896**	5–Lead SIP	453	–	200	1	27
115V ± 1V	**1740**	5–Lead SIP	538	117	200	1	40
115V ± 1V	**15018**	5–Lead SIP	538	117	200	1	40
120V ± 0.8V	**1839**	5–Lead SIP	453	–	200	1	27
120V ± 0.8V	**15040**	5–Lead SIP	453	–	200	1	27
123V ± 0.8V	**1776**	5–Lead SIP	453	–	200	1	27
123V ± 1V	**15021**	5–Lead SIP	538	125	200	1	40
125V ± 1V	**1741**	5–Lead SIP	538	127	200	1	40
125V ± 1V	**15020**	5–Lead SIP	538	127	200	1	40
125V ± 0.8V	**1897**	5–Lead SIP	453	–	200	1	27
125V ± 0.8V	**15041**	5–Lead SIP	453	–	200	1	27
130V ± 1V	**1742**	5–Lead SIP	538	132	200	1	40
130V ± 1V	**15019**	5–Lead SIP	538	132	200	1	40
130V ± 0.8V	**1777**	5–Lead SIP	453	–	200	1	27
130V ± 0.8V	**15032**	5–Lead SIP	453	–	200	1	27
135V ± 0.8V	**1743**	5–Lead SIP	538	137	200	1	40
135V ± 0.8V	**1778**	5–Lead SIP	453	–	200	1	27
135V ± 0.8V	**15012**	5–Lead SIP	538	137	200	1	40
135V ± 0.8V	**15033**	5–Lead SIP	453	–	200	1	27
135V ± 1V	**15022**	5–Lead SIP	538	–	200	1	40

*T_C = 100°C

IC VOLTAGE REGULATOR

(FOR ELECTRONIC TUNER)

NTE Type Number	Case Style	Diagram Number	Regulated Voltage (Volts) V_Z Min	Regulated Voltage (Volts) V_Z Max	Maximum Supply Current (mA) I_Z	Power Dissipation (mW) P_D*	Temperature Coefficient of Regulated Voltage (mV/°C) $\Delta V_Z/\Delta T$ Min	Temperature Coefficient of Regulated Voltage (mV/°C) $\Delta V_Z/\Delta T$ Max	Maximum Dynamic Resistance (Ω) r_Z	Operating Temperature Range (°C) T_{opr}	Storage Temperature Range (°C) T_{stg}
615	Axial	91	30	35	10	200	–1	+1	25	–20 to +75	–40 to +125
615P	TO92	38	31	35	10	200	–1	+1	25	–20 to +75	–40 to +125

*T_C = 25°C

See Diagrams, beginning on Page 1–121

DIMENSIONAL OUTLINE DRAWINGS

Diagram 1

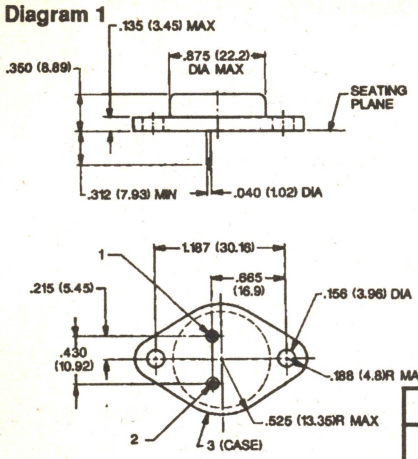

TO3

	1	2	CASE
b	ADJ	Vin	Vout
c	Vin	Vout	GND
d	ADJ	Vout	Vin
e	GND	Vout	Vin

Diagram 9

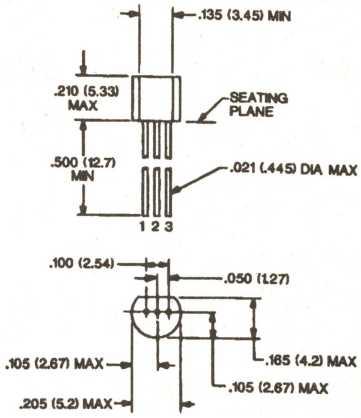

TO92

	1	2	3
l	Vout	GND	Vin
p	GND	Vin	Vout
q	ADJ	Vout	Vin

Diagram 11

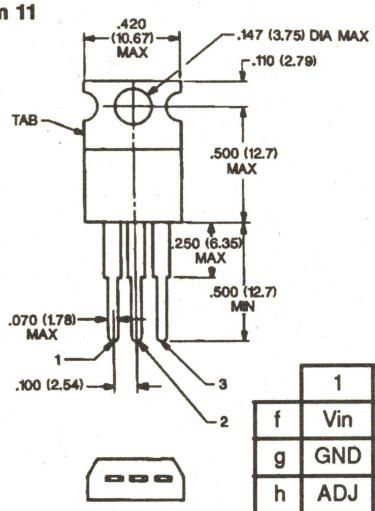

TO220

	1	2	3	TAB
f	Vin	GND	Vout	GND
g	GND	Vin	Vout	Vin
h	ADJ	Vout	Vin	Vout
i	ADJ	Vin	Vout	Vin

Diagram 59

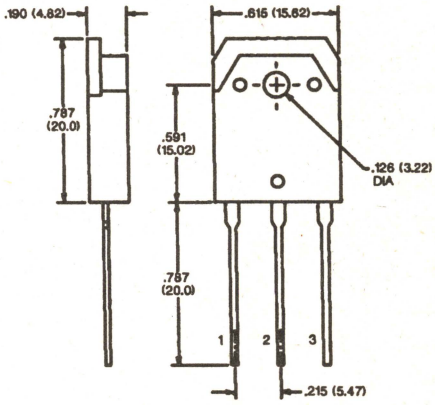

TO3P

	1	2	3	CASE
b	Vout	Vin	GND	Vin
c	GND	Vout	Vin	Vout

Diagram 38

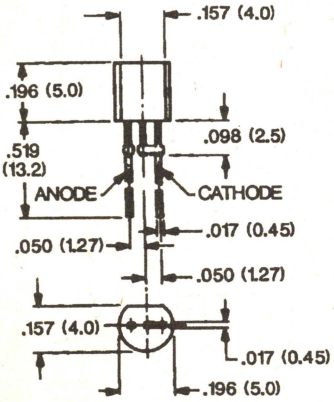

TO92

Diagram 91

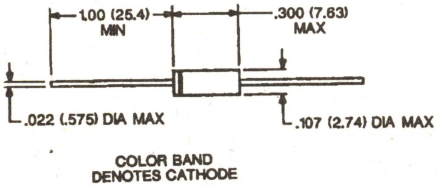

DO7

Diagram 200

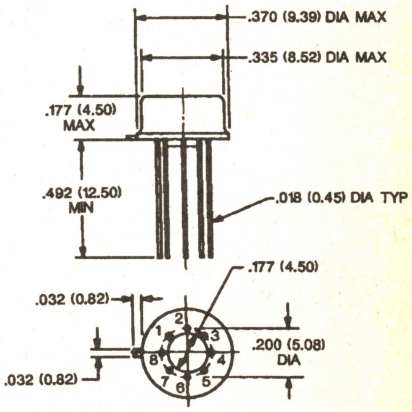

DIMENSIONAL OUTLINE DRAWINGS

Diagram 201

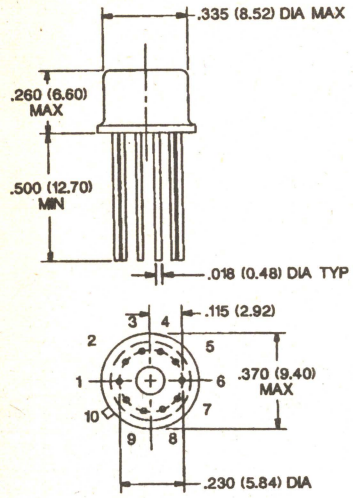

Diagram 245

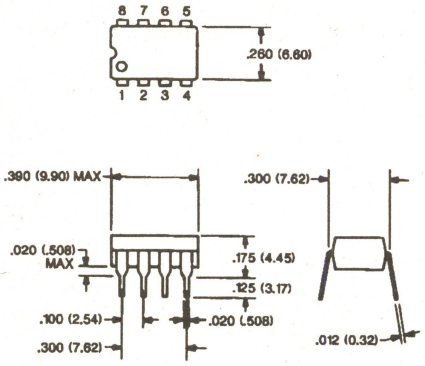

Diagram 247

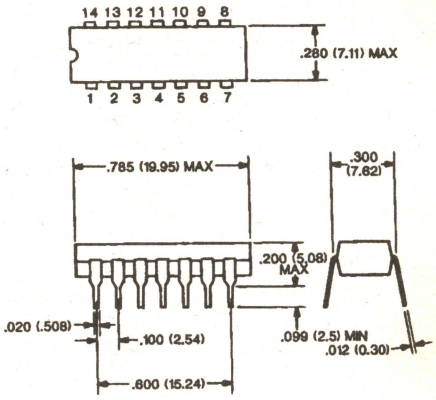

Diagram 308

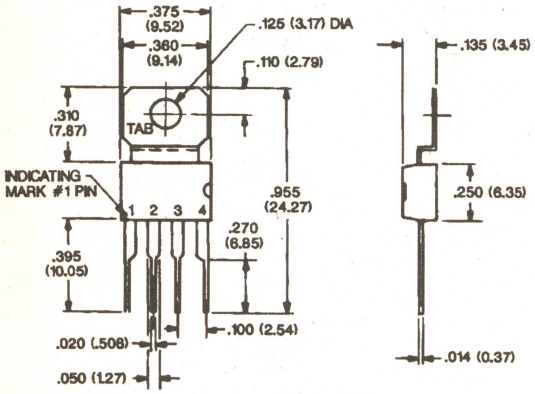

	1	2	3	4	TAB
a	GND	Vin	Vout	ADJ	GND
b	GND	ADJ	Vout	Vin	Vin

Diagram 414

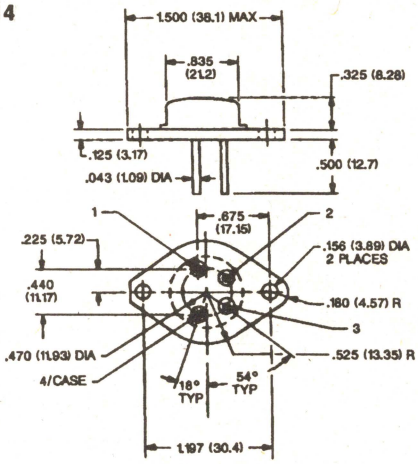

TO3

	1	2	3	4	CASE
b	Vin	Vout	ADJ	GND	GND

Diagram 453

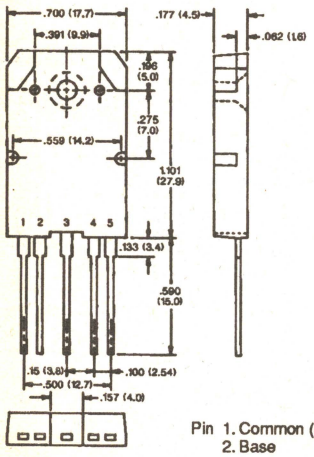

Pin 1. Common (–)
2. Base
3. Input
4. Output
5. Blank

Diagram 453 alt.

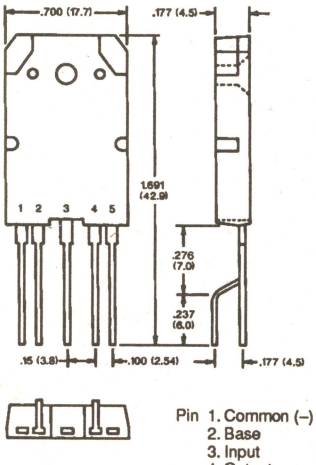

Pin 1. Common (–)
2. Base
3. Input
4. Output
5. Blank

Diagram 538

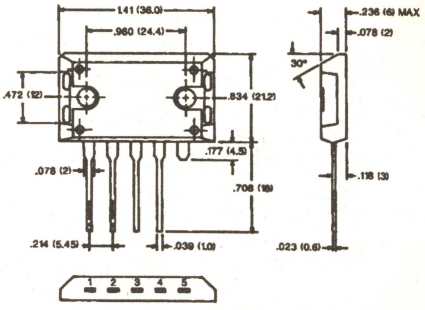

Pin 1. Input/Case
2. Base
3. Common (–)
4. Output
5. Blank

Positive Voltage Regulator — **TO3, See Diag. 1c**

NTE309K
Bottom View

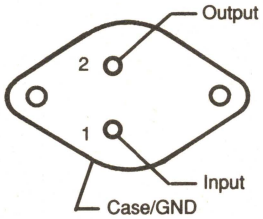

Chroma Subcarrier Regenerator, V_{CC} = 12V — **16–Lead DIP, See Diag. 249**

NTE700

Hue Control	1	16	ACC Output
OSC Output	2	15	ACC Output
OSC Output	3	14	ACC Input
Horiz Key Pulse Input	4	13	APC Input
GND	5	12	APC Output
OSC Input	6	11	APC Output
OSC Feedback Loop	7	10	V (+)
OSC Feedback Loop	8	9	N.C.

Video Signal Processor, V_{CC} = 15V — **16–Lead DIP, See Diag. 249**

NTE701

Video Input	1	16	Horiz Pulse Input
Sync Sep	2	15	AGC Filter
Comp Sync Input	3	14	IF Gain Clamp
Horiz Sawtooth Input	4	13	IF AGC
GND	5	12	Tuner Rev AGC
OSC Phase Input	6	11	Tuner Fwd AGC
OSC Quad Input	7	10	Horiz AFC Filter
OSC Output	8	9	V_{CC}

TV Chroma Processor — **16–Lead DIP, See Diag. 249**

NTE702

Chroma Input	1	16	ACC In
ACC Input	2	15	Color Killer
Amplified Chroma	3	14	Second Chroma Out
Amplified Chroma	4	13	Demod Input
GND	5	12	V (+)
Chroma Cont	6	11	B–Y Out
Ref Sub Input	7	10	R–Y Out
Ref Sub Input	8	9	G–Y Out

RF/IF Amp, V_{CC} = 20V — **8–Lead Epoxy, See Diag. 410**

NTE703
Top View

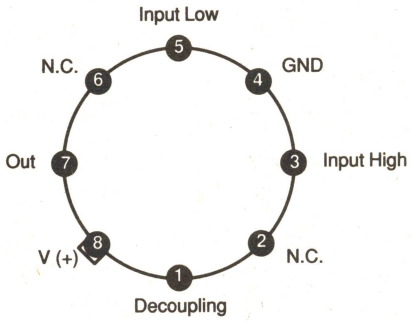

TV Sound, IF Amp, V_{CC} = 5.5V — **8–Lead Metal Can, See Diag. 201**

NTE704
Top View

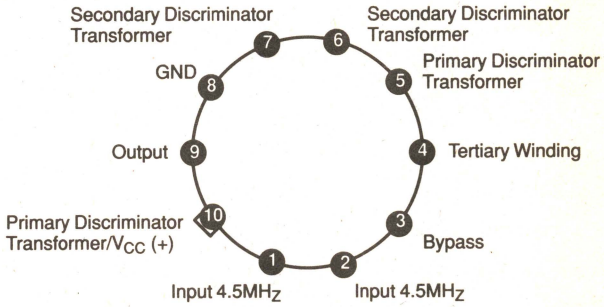

Chroma Demod, V_{CC} = 28V — **9–Lead Metal Can, See Diag. 402**

NTE705A
Top View

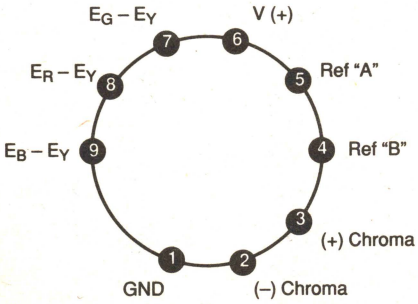

TV/FM Sound, IF Amp, V_{CC} = 16V — **14–Lead DIP, See Diag. 247**

NTE708

Audio Output	1	14	De–Emphasis
Detector Input Ref	2	13	V_{CC}
N.C.	3	12	Det Input (QuadratureNetwork)
IF Input	4	11	Test Point
Decoupling	5	10	Amplifier Output
IF Input Ref	6	9	Amplifier Low Output
GND	7	8	N.C.

See Diagrams, beginning on Page 1–252

TV/FM Sound, IF Amp, V_{CC} = 14V — **14–Lead DIP, See Diag. 247**

NTE709

Detector Output	1	14	De–Emphasis
Reference	2	13	V_{CC}
N.C.	3	12	Det Input
IF Input	4	11	Test Point
Decoupling	5	10	Amplifier Output
IF Input Ref	6	9	Amplifier Low Output
GND	7	8	N.C.

Color TV–AFT System — **10–Lead Metal Can, See Diag. 201**

NTE711
Top View

Video IF Input	7	
Video IF Input	6	
GND	8	
Correction Control Voltages	5	
N.C.	9	
Correction Control Voltages	4	
V_{CC} (+)	10	
Phase Detector Transformer	3	
Phase Detector Transformer	1	
Phase Detector Transformer	2	

TV/FM Sound, IF Det, V_{CC} = 140V Applied Through R_S = 3.9kΩ — **14–Lead DIP, See Diag. 247**

NTE712

IF In Bias	1	14	Audio Input
IF In	2	13	Tone Control
GND	3	12	Audio Output
GND	4	11	N.C.
V_{CC}	5	10	Quad Detector
DC Volume Control	6	9	Quad Detector
De–Emphasis	7	8	Detector Output

Chroma Demod, V_{CC} = 27V — **14–Lead DIP, See Diag. 247**

NTE713

N.C.	1	14	GND
N.C.	2	13	B–Y
(–) Chroma	3	12	N.C.
(+) Chroma	4	11	R–Y
N.C.	5	10	N.C.
Ref "B"	6	9	G–Y
Ref "A"	7	8	V_{CC}

Chroma Subcarrier Regenerator, V_{CC} = 24V Max — **16–Lead DIP, See Diag. 248**

NTE714

Tint Control	1	16	ACC Detector Output
OSC Output	2	15	ACC Detector Output
OSC Output	3	14	ACC Detector Input
Gate In	4	13	APC Detector In
GND	5	12	APC Detector Out
OSC Feedback	6	11	APC Detector Out
OSC Control	7	10	V_{CC}
OSC Control	8	9	N.C.

TV Chroma IF Amp, V_{CC} = 30V — **14–Lead DIP, See Diag. 247**

NTE715

Acc In	1	14	ACC Input
Chroma 1 Input	2	13	Killer Adjust
Gain Preselect	3	12	Decouple
GND	4	11	Decouple
N.C.	5	10	Chroma Level Control
Chroma 1 Output	6	9	Chroma 2 Output
Chroma 2 Input	7	8	V_{CC}

Dual, Low Noise, Low Level, Pre–Amp — **14–Lead DIP, See Diag. 247**

NTE721

V_{CC}	1	14	GND
+7.5V Zener	2	13	Voltage Reg
Feedback Channel 1	3	12	Feedback Channel 2
Roll–Off Channel 1	4	11	Roll–Off Channel 2
Output Channel 1	5	10	Output Channel 2
Input Return Channel 1	6	9	Input Return Channel 2
Input Channel 1	7	8	Input Channel 2

FM Stereo Multiplex Demod — **14–Lead DIP, See Diag. 247**

NTE722

19kHz Filter	1	14	Decoupling
19kHz Filter	2	13	38kHz Filter
MPX In	3	12	Right Out
N.C.	4	11	Left Out
N.C.	5	10	38kHz Filter Bias
Stereo Lamp	6	9	V_{CC}
GND	7	8	N.C.

See Diagrams, beginning on Page 1–252

FM Sound System, V_{CC} = 11.2V Typ — **14–Lead DIP, See Diag. 247**

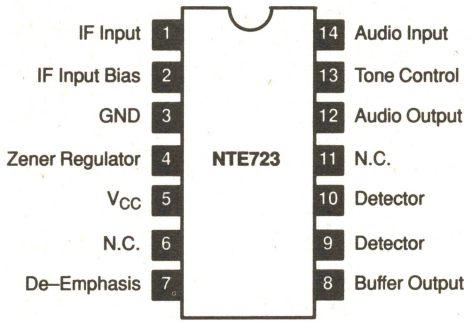

Differential/Cascode Amp — **8–Lead Metal Can, See Diag. 200**

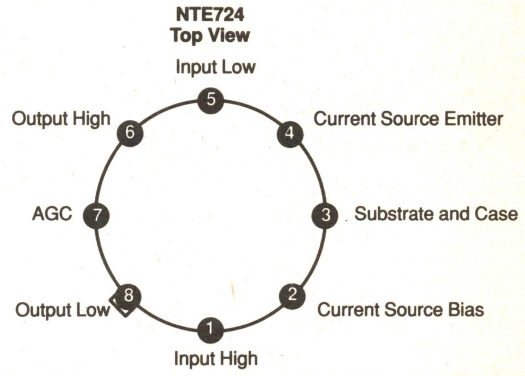

Dual, Low Noise, Preamp/OP Amp, V_{CC} = ±18V — **14–Lead DIP, See Diag. 247**

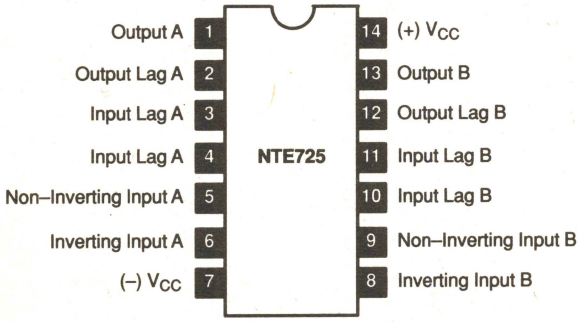

Wide Band Amp, V_{CC} = 10V — **10–Lead Metal Can, See Diag. 206**

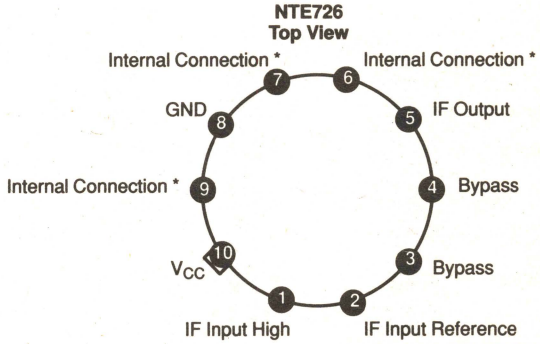

* NOTE: These leads are internally connected. DO NOT USE.

Four Independent AC Amps, V_{CC} = 16V — **16–Lead DIP, See Diag. 248**

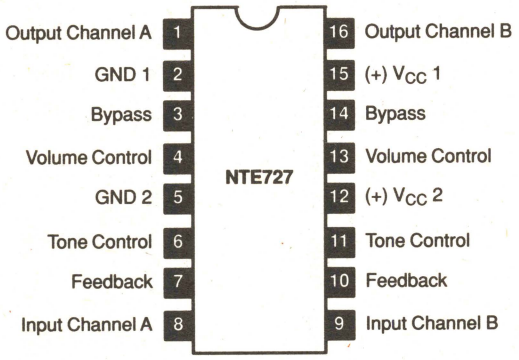

TV Video IF System, V_{CC} = 11.3V — **20–Lead DIP, See Diag. 278**

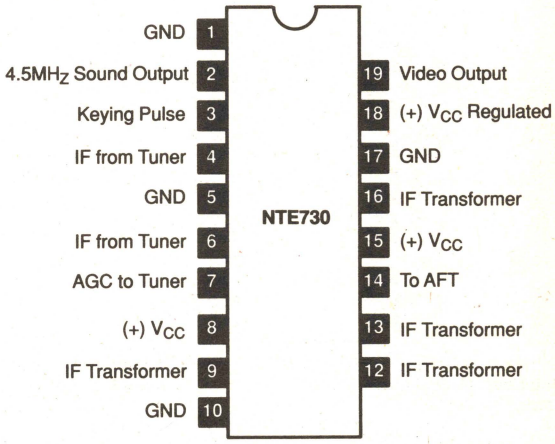

TV Video Signal Processor, V_{CC} = 30V — **16–Lead DIP, See Diag. 248**

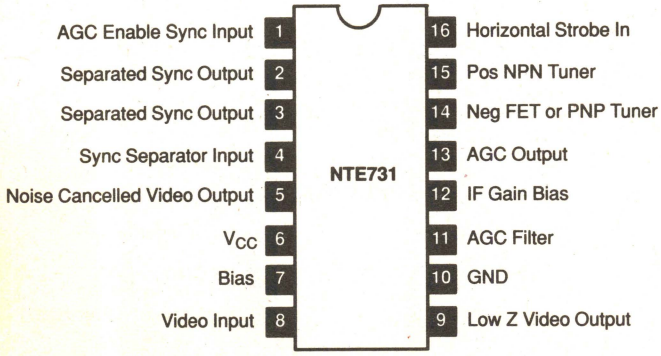

TV FM IF Gain Block — **8–Lead DIP, See Diag. 245**

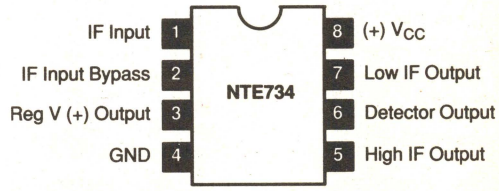

See Diagrams, beginning on Page 1–252

FM IF Amp — **8–Lead DIP, See Diag. 246**

NTE736

IF Input	1	8	V_{CC}
IF Input Decouple	2	7	Low IF Output
IF Supply Decouple	3	6	Regulator Output
GND	4	5	IF Output

FM IF Amp/Limiter Quad Det — **14–Lead DIP, See Diag. 247**

NTE737

Detector Output	1	14	De–Emphasis
Detector Input (–)	2	13	Regulated Voltage
V_{CC}	3	12	Detector Input (+)
Input High	4	11	Test Point
Feedback	5	10	Amp Out High
Input Low	6	9	Amp Out Low
GND	7	8	N.C.

Chroma Processor — **14–Lead DIP, See Diag. 247**

NTE738

OSC Peak	1	14	Voltage Regulator
Chroma Output	2	13	OSC Output
Chroma Control	3	12	Hue Control
Burst Gate	4	11	Phase Shift
Chroma In	5	10	1st ACC Filter/Killer Control
Chroma Bypass	6	9	2nd ACC Filter
GND	7	8	Crystal

Dual, Doubly Balanced Chroma Demod w/RGB Output Matrix, V_{CC} = 30V — **14–Lead DIP, See Diag. 247**

NTE739

G–Y Output	1	14	V_{CC}
R–Y Output	2	13	B–Y Ref Input
Luminance Input	3	12	R–Y Ref Input
B–Y Output	4	11	N.C.
DC Ref Input	5	10	Chroma DC In
Blanking Input	6	9	R–Y Chroma Input
GND	7	8	B–Y Chroma Input

Audio Power Amp, V_{CC} = 26V — **14–Lead DIP, See Diag. 279**

NTE740A

Bypass	1	14	V_{CC}
(+) Input	2	13	N.C.
GND	3	12	GND
GND	4	11	GND
GND	5	10	GND
(–) Input	6	9	N.C.
GND	7	8	Output

TV Sound Channel, 2W, V_{CC} = 28V — **16–Lead DIP, See Diag. 263**

NTE742

DC Volume Control	1	16	De–Emphasis
Detector Output	2	15	Phase Shift
Amplifier Input	3	14	Phase Shift
GND	Fin	Fin	GND
Audio Output	6	11	IF Decoupling
V_{CC}	7	10	IF Input
Regulator Output	8	9	Low–Level GND

Phase Lock Loop (PLL) Stereo Demodulator, V_{CC} = 16V — **16–Lead DIP, See Diag. 248**

NTE743

Composite Input	1	16	V_{CC}
Audio Amp Output	2	15	VCO Control
Lt Load & De–Emphasis	3	14	Loop Filter
Left Output	4	13	Loop Filter
Right Output	5	12	Phase Detector Input
Rt Load & De–Emphasis	6	11	Pilot Monitor
Lamp Driver	7	10	Threshold Filter
GND	8	9	Threshold Filter

RF/IF Amp, V_{CC} = 9V — **14–Lead DIP, See Diag. 247**

NTE744

Mixer Input	1	14	Mixer Output
OSC Tank	2	13	RF Output
V_{CC}	3	12	RF Input
Mixer Bypass	4	11	RF Bypass
AGC Drive	5	10	AGC Capacitor
IF Output	6	9	RF GND
IF Input	7	8	Substrate & IF Amp GND

See Diagrams, beginning on Page 1–252

IF Amp, V_{CC} = 18V — **8–Lead DIP, See Diag. 246**

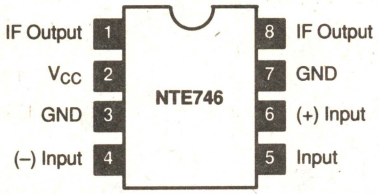

Low Level Video Detector, V_{CC} = 24V — **8–Lead DIP, See Diag. 245**

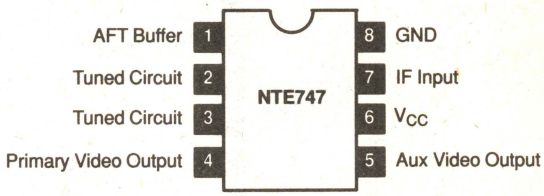

TV Sound Circuit, V_{CC} = 16V — **14–Lead DIP, See Diag. 247**

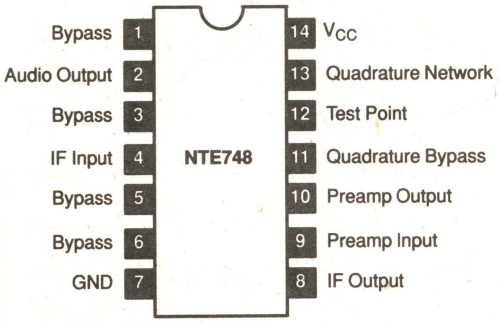

TV Video IF Amp, V_{CC} = 18V — **14–Lead DIP, See Diag. 247**

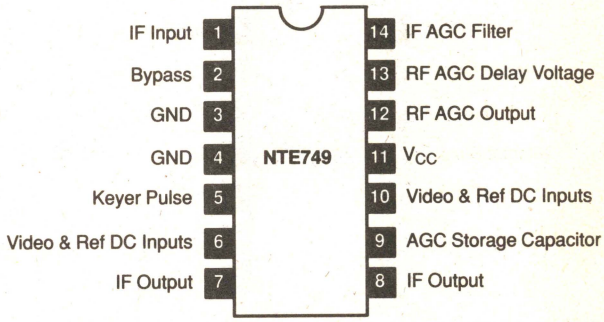

Four Stage FM/IF Amp, V_{CC} = 18V Max — **14–Lead DIP, See Diag. 247**

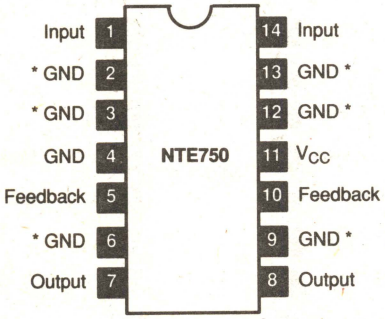

* NOTE: Pins 2, 3, 6, 9, 12, and 13 are not internally connected, but should be grounded for maximum stability.

Single Toggle Flip–Flop — **4–Lead DIP, See Diag. 244**

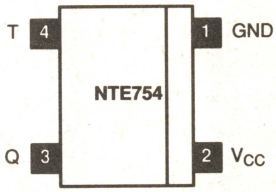

FM Limiting IF Amp — **6–Lead DIP, See Diag. 509**

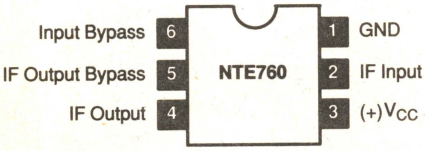

Dual OP Amp, V_{CC} = ±18V — **8–Lead DIP, See Diag. 245**
***SOIC–8, See Diag 550**

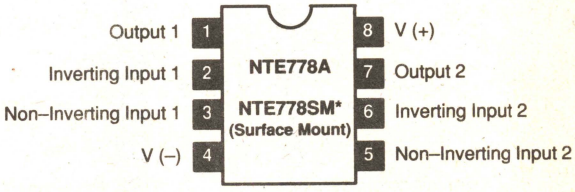

See Diagrams, beginning on Page 1–252

Dual Low–Noise OP Amp, V_{CC} = ±18V — **8–Lead SIP, See Diag. 224**

NTE778S Front View

8	V (+)
7	Output 2
6	Inverting Input 2
5	Non–Inverting Input 2
4	V (–)
3	Non–Inverting Input 1
2	Inverting Input 1
1	Output 1

TV Automatic Fine–Tuning Subsystem — **10–Lead Metal Can, See Diag. 201**

NTE780 Top View

1	Det Input A
2	IF Output
3	Det Input B
4	DC Amp Output X
5	DC Amp Output Y
6	Det Bias
7	IF Input
8	Common & Substrate
9	N.C.
10	V (+) Reg

Automatic Fine–Tuning Detector — **14–Lead DIP, See Diag. 247**

NTE783

V (+) Reg	1	14	GND
Detector A Input	2	13	N.C.
If Output	3	12	IF Input
Detector B Input	4	11	N.C.
AFT Out	5	10	N.C.
N.C.	6	9	Decouple
N.C.	7	8	AFT Output

Wide–Band Power Amp, V_{CC} = 12V — **12–Lead Metal Can, See Diag. 204**

NTE784 Top View

1	Buffer Amp Output
2	Differential Amp Input "B"
3	Differential Amp Input "A"
4	Collector Output Q_1
5	Emitter Output Q_1
6	Emitter Output Q_2
7	Collector Output Q_2
8	Optional Bias Short to V_{CC}
9	V_{CC}
10	Buffer Amp Input
11	2.1V Bias Point
12	GND

AM Receiver Subsystem, V_{CC} = 16V — **16–Lead DIP, See Diag. 248**

NTE787

Converter Input Bypass	1	16	V_{CC}
Converter Input	2	15	Audio Output
Converter Output	3	14	From Detector Filter
1st IF Amp Input	4	13	AGC Output From RF Amp
Substrate GND	5	12	To Tuning Meter
1st IF Amp Output	6	11	AGC Filter
2nd IF Feedback	7	10	V_{CC}
2nd IF Amp Input	8	9	To Detector Filter & Audio

IF System for FM Receiver V_{CC} = 16V — **16–Lead DIP, See Diag. 248**

NTE788

IF Input	1	16	N.C.
Decouple	2	15	AGC
IF Bias	3	14	GND
IF GND	4	13	Tuning Meter
Mute Input	5	12	Mute Logic
Audio Output	6	11	V_{CC}
AFC Output	7	10	Ref Bias
IF Output	8	9	Quad Input

Stereo Multiplex Decoder, V_{CC} = 16V — **16–Lead DIP, See Diag. 282**

NTE789

Composite FM Detected Signal Input	1	16	Indicator Input 76kHz Network
Bypass	2	15	Capacitor Input 76kHz Network
GND	3	14	Phase Lock Filter Loop Network
GND	4	13	GND
GND	5	12	Lamp Drive Circuit
RC Network	6	11	(+) V_{CC}
19kHz Pilot Lamp	7	10	Rt Channel Output
Sensitivity Network	8	9	Lt Channel Output

Dual Chroma Demod, V_{CC} = 27V — **14–Lead DIP, See Diag. 247**

NTE790

N.C.	1	14	GND
N.C.	2	13	B–Y Output
(–) Chroma	3	12	N.C.
(+) Chroma	4	11	R–Y Output
N.C.	5	10	N.C.
R–Y Injection	6	9	G–Y Output
B–Y Injection	7	8	V_{CC}

See Diagrams, beginning on Page 1–252

TV Chroma Amp Demod, V_{CC} = 24V — **16–Lead DIP, See Diag. 248**

NTE791

ACC Input	1	16	ACC Input
1st Amp Input	2	15	Killer Adjust
1st Amp Output	3	14	2nd Amp Output
2nd Amp Input	4	13	Demodulator Chroma Input
GND	5	12	V_{CC}
Chroma Gain Control	6	11	B–Y Output
Reference Input	7	10	R–Y Output
Reference Input	8	9	G–Y Output

Vertical Countdown Circuit — **14–Lead DIP, See Diag. 247**

NTE793

OSC Input	1	14	Vertical Sync Input
Horizontal Output	2	13	
V_{CC} (4.3V)	3	12	
Composite Sync Input	4	11	
	5	10	Bypass
GND	6	9	Pulse Duration
Vertical Output	7	8	Pulse Duration

TV Chroma Processor, V_{CC} = 13.2V — **16–Lead DIP, See Diag. 338**

NTE797

Chroma Input	1	16	Chroma Gain Control
AF PC Filter Network	2	15	Chroma Output
Bypass	3	14	Zener Reference
RF Bypass	4	13	Overload Det
GND	5	12	V_{CC}
Crystal Filter	6	11	ACC Filter Network
Crystal Filter	7	10	ACC Filter Network
Carrier Output	8	9	Horizontal Keying Input

Four Channel "SQ" Decoder, V_{CC} = 25V — **14–Lead DIP, See Diag. 247**

NTE799

Phase Shift Network	1	14	RB Output
LF Output	2	13	Phase Shift Network
LB Output	3	12	V_{CC}
Phase Shift Network	4	11	RF Output
Phase Shift Network	5	10	Phase Shift Network
Lt Channel Input	6	9	Phase Shift Network
GND	7	8	Rt Channel Input

FM Stereo Demod, V_{CC} = 14V — **14–Lead DIP, See Diag. 247**

NTE801

V_{CC}	1	14	OSC RC Network
Input	2	13	19kHz Loop Filter
Audio Amp Output	3	12	19kHz Loop Filter
Lt Channel Output	4	11	Demodulator Input
Rt Channel Output	5	10	19kHz Output
Lamp Indicator	6	9	Stereo Switch Filter
GND	7	8	Stereo Switch Filter

Dual Audio Power Amp, 2W Output, V_{CC} = 26V — **14–Lead DIP, See Diag. 279**

NTE804

Bias	1	14	V_{CC}
Output 1	2	13	Output 2
* GND	3	12	GND *
* GND	4	11	GND *
* GND	5	10	GND *
Input 1	6	9	Input 2
Feedback 1	7	8	Feedback 2

* NOTE: These leads are internally connected.

AM/FM RF IF Amp — **14–Lead DIP, See Diag. 247**

NTE806

Mixer Output	1	14	Mixer Input
RF Output	2	13	Local OSC Tank Network
RF Input	3	12	V_{CC}
RF Bias	4	11	Mixer Bypass
AGC Decoupling Capacitor	5	10	AGC Drive
RF GND	6	9	IF Output
Substrate GND	7	8	IF Input

TV Sound Channel, 1W, V_{CC} = 18V — **16–Lead DIP, See Diag. 263**

NTE807

DC Volume Control	1	16	De–Emphasis Tone Control
Detector Audio Output	2	15	Phase Shift
Power Amp Audio Input	3	14	Phase Shift
	Fin	Fin	
Audio GND	6	11	IF Input
Audio Input	7	10	IF Input
V_{CC}	8	9	Regulator Output

See Diagrams, beginning on Page 1–252

TV Chroma Processor — **16–Lead DIP, See Diag. 248**

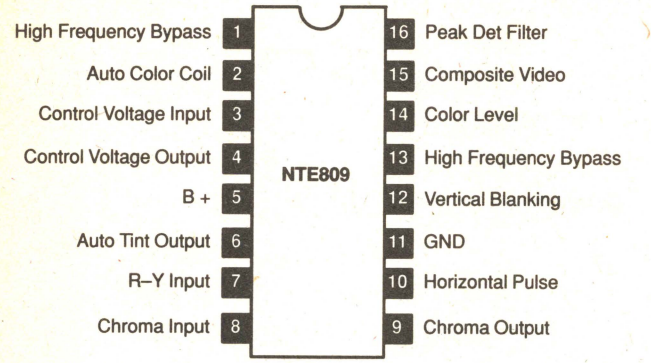

Audio PO, 2W — **14–Lead DIP, See Diag. 279**

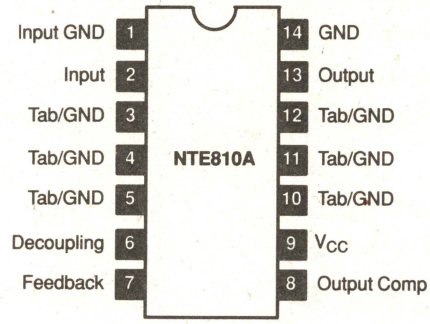

Audio Power Amp, 1W Output — **14–Lead DIP, See Diag. 247**

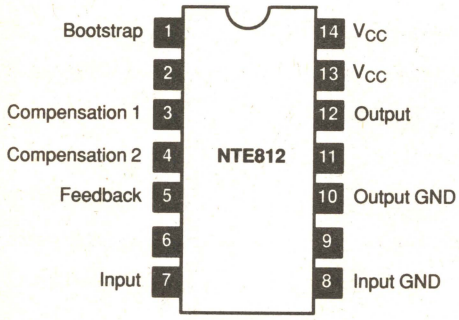

TV Horizontal Processor, V_{CC} = 30V — **8–Lead DIP, See Diag. 245**

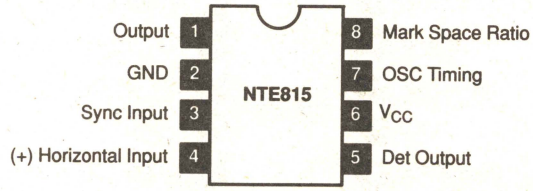

TV Luminance Processor, V_{CC} = 15V — **16–Lead DIP, See Diag. 248**

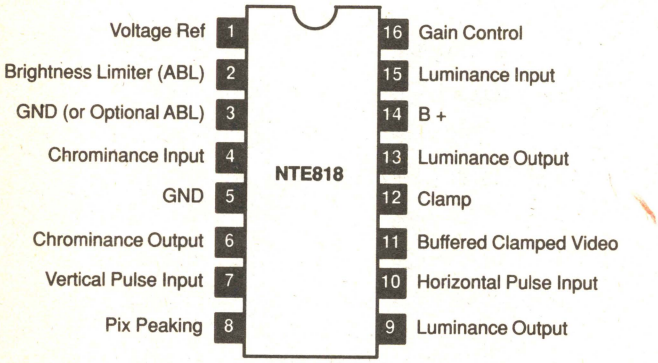

TV Chroma Demodulator, V_{CC} = 27V — **14–Lead DIP, See Diag. 247**

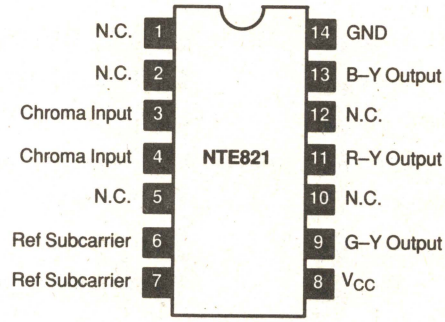

Video Chroma/Processor, V_{CC} = 16V — **16–Lead DIP, See Diag. 248**

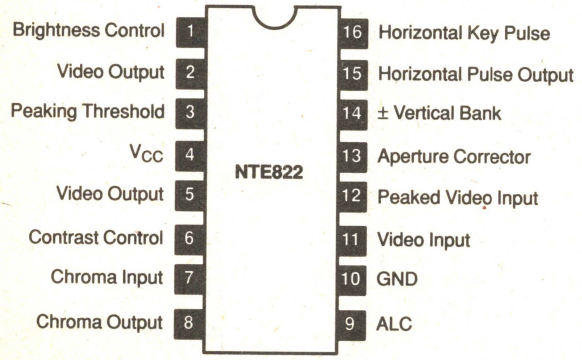

Low Voltage Audio Amp, 1W Output, V_{CC} = 15V — **8–Lead DIP, See Diag. 245**

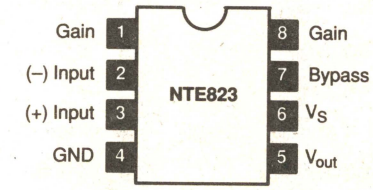

See Diagrams, beginning on Page 1–252

Low Noise, Dual Preamp, V_{CC} = 30V — **8–Lead DIP, See Diag. 245**

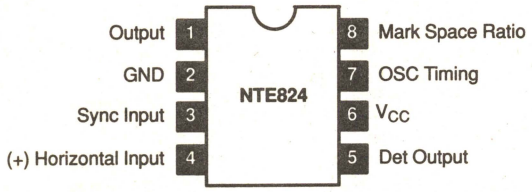

Battery Operated Audio Amp, 1W Output, V_{CC} = 10V — **14–Lead DIP, See Diag. 247**

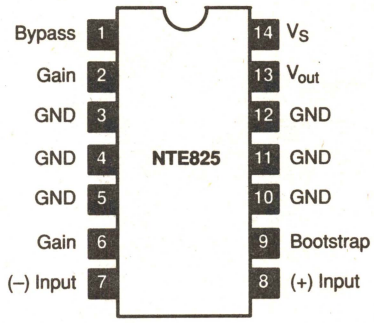

TV Sound System, 2W, V_{CC} = 26V — **18–Lead DIP, See Diag. 287**

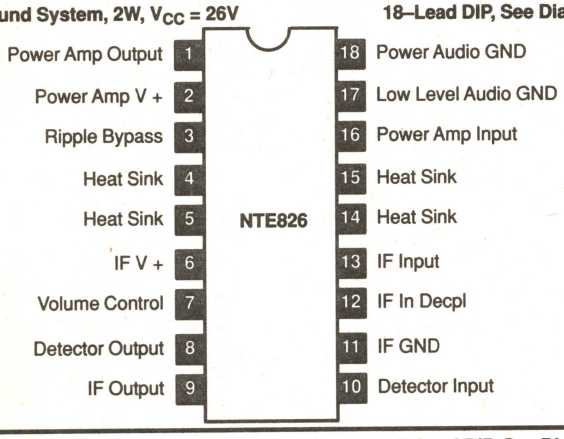

Audio Power Amp, 1.5W Output, V_{CC} = 22V — **14–Lead DIP, See Diag. 247**

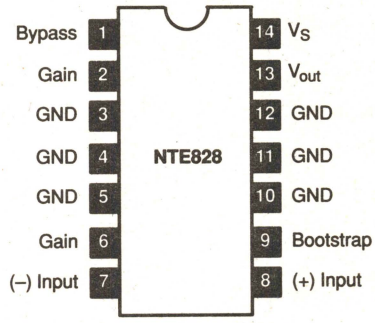

Electronic Attenuator, 90dB @ 1kHz, V_{CC} = 20V — **8–Lead DIP, See Diag. 245**

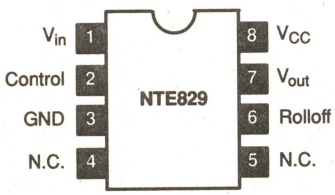

Tone Decoder, V_{CC} = 10V — **8–Lead DIP, See Diag. 245**
***SOIC–8, See Diag. 550**

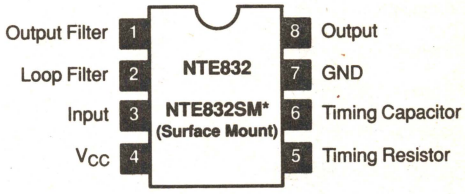

Low Power, Low Offset, Voltage Quad Comparator, V_{CC} = 36V or ±18V — **14–Lead DIP, See Diag. 247**
***SOIC–14, See Diag. 551**

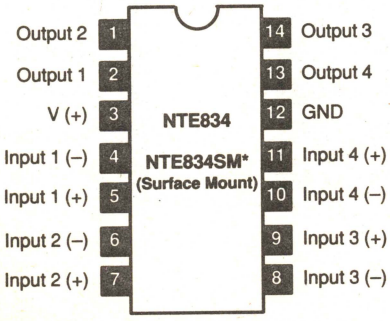

Chroma Processor — **16–Lead DIP, See Diag. 249**

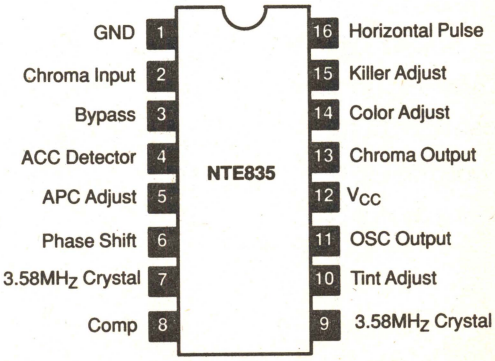

See Diagrams, beginning on Page 1–252

TV Horizontal Processor, V_{CC} = 30V — **8–Lead DIP, See Diag. 246**

NTE836

Output	1	8	Mark Space Ratio
GND	2	7	OSC Timing
Sync Input	3	6	V_{CC}
Sawtooth Input	4	5	Phase Detector Output

TV Video IF Amp System, V_s1 = 14V, V_S2 = 24V — **16–Lead DIP, See Diag. 249**

NTE841

AFT Tank 1	1	16	AFT Tank 2
IF Bias	2	15	AFT Filter
AFT Input	3	14	AFT Filter
V_S1	4	13	AFT Output
IF Input	5	12	AFT Output
GND	6	11	V_S2
Shunt Regulator	7	10	4.5MHz Output
Video Output	8	9	AFT Gain/Defeat

TV Video IF Amp, Sync Sep & AGC Processor, V_{CC} = 14V — **16–Lead DIP, See Diag. 249**

NTE842

Max Gain Bias	1	16	2nd Amp Input
1st Amp Output	2	15	AGC Delay
Input GND	3	14	2nd Amp Output
1st Amp Input	4	13	Substrate GND
AGC Filter	5	12	Sync Output
Reverse AGC Output	6	11	(+) 12V Supply
Forward AGC Output	7	10	Video Input
Key Pulse Input	8	9	Sync Filter

TV Video IF PLL Sync Det, V_{CC} = 15V — **16–Lead DIP, See Diag. 249**

NTE843

Limiter Tuning	1	16	AFT Tuning
Limiter Tuning	2	15	AFT Tuning
GND (V)	3	14	AFT Defeat
Video IF Input	4	13	GND (V)
APC Filter	5	12	AFT Output
VCO Tuning	6	11	Zero–Carrier Bias Adjust
VCO Tuning	7	10	Video Output (Negative Going Sync)
V (+)	8	9	Sound Take–Off Output

Single Chip TV Chroma/Luminance Processor, V_{CC} = 14V — **28–Lead DIP, See Diag. 253**

NTE844

Chroma Output	1	28	Beam Limiter
Chroma Control	2	27	Luminance
Chroma Input	3	26	Picture Control
Overload Filter	4	25	Low Pass Filter
ACC, Killer Filter	5	24	Bright Control
ACC, Killer Filter	6	23	V_{CC}
Sandcastle Pulse	7	22	Blue
GND	8	21	Red
APC Filter	9	20	Green
APC Filter	10	19	Q Carrier Input
OSC Input 90°	11	18	I Carrier Input
OSC Input 180°	12	17	Demodulator Chroma Input
OSC Output	13	16	Overload, Flesh Disable
Tint Control	14	15	Carrier Output

TV Chroma Processor/Demod — **24–Lead DIP, See Diag. 252**

NTE845

OSC Output	1	24	V_{CC}
APC Filter	2	23	Tint Control
OSC Input	3	22	Subcarrier Ref Output
OSC Input	4	21	Burst Gate Input
GND	5	20	Demod Luminance Input
ACC Filter	6	19	G Output
Chroma Amp Input (1)	7	18	G–Y Subcarrier Input 225°
Color Killer	8	17	R Output
Chroma Amp Output (1)	9	16	B–Y Subcarrier Input 180°
Chroma Amp Input (2)	10	15	B Output
Color Level Control	11	14	Demod Chroma Input
Chroma Amp Output (2)	12	13	Auto Switch

See Diagrams, beginning on Page 1–252

TV Video Modulator, V_{CC} = 19V — **18–Lead DIP, See Diag. 287**

NTE846

Chroma Lead	1	18	Chroma Lag
R–Y Input	2	17	Chroma OSC Output
Chroma Bias	3	16	Chroma Supply
B–Y Input	4	15	Sound Tank
GND	5	14	RF Supply
Channel B Tank	6	13	Chroma Subcarrier
Channel B Tank	7	12	Video Input
Channel A Tank	8	11	Channel A Output
Channel A Tank	9	10	Channel B Output

TV Horiz/Vert Countdown Digital Sync System, V_{CC} = 12V — **14–Lead DIP, See Diag. 247**

NTE849

V_{CC}	1	14	GND
Vertical Height	2	13	Comp Sync Input
Ramp Charge Capacitor	3	12	Vertical Sync Input
External Bias Load	4	11	To Horizontal Deflection Ckt
Yoke Feedback	5	10	Async Time Constant
Vertical Driver	6	9	32 x Horizontal
Vertical Blank Output	7	8	Mode Select

OP Amp/Bandswitch, V_{CC} = 35V — **14–Lead DIP, See Diag. 247**

NTE850

OP Amp Output	1	14	Invereting OP Amp Input
Logic Input AFT Enable	2	13	Non–Inverting OP Amp Input
AFT Output	3	12	V +
AFT Input	4	11	Logic "B" Bandswitch Input
GND	5	10	Logic "A" Bandswitch Input
Bandswitch Output VHF High Band	6	9	Bandswitch Output, UHF
Bandswitch Output VHF Low Band	7	8	Bandswitch Input

VHF/UHF Prescaler, V_{CC} = 5.5V — **14–Lead DIP, See Diag. 247**

NTE851

V (+) 1	1	14	VHF Input
V (+) 2	2	13	$\overline{\text{VHF Input}}$
Bandswitch Input	3	12	N.C.
Output	4	11	N.C.
$\overline{\text{Output}}$	5	10	UHF Input
N.C.	6	9	$\overline{\text{UHF Input}}$
V (–) 1	7	8	V (–) 2

Vert/Horiz Processing System, Eliminates Hold Controls, V_{CC} = 7.5V — **14–Lead DIP, See Diag. 247**

NTE852

Flyback Sawtooth	1	14	Horizontal Sync
Loop Filter	2	13	Burst Gate Output
DC Ref	3	12	Vertical Output
VCO Output	4	11	Vertical Retrace Timing
VCL L 45	5	10	Vertical Sync
VCO Input	6	9	V +
GND	7	8	Horizontal Output

Low Power, Narrow Band, FM IF System, V_{CC} = 12V — **16–Lead DIP, See Diag. 248**

NTE853

Crystal OSC	1	16	RF Input
Crystal OSC	2	15	GND
Mixer Output	3	14	Audio Mute
V_{CC}	4	13	Scan Control
Limiter Input	5	12	Squelch Input
Decoupling	6	11	Filter Output
Limiter Output	7	10	Filter Input
Quad Input	8	9	Demodulator Output

Color TV Video Monitor, V_{CC} = 8V — **14–Lead DIP, See Diag. 247**

NTE855

Clock Output	1	14	RF Tank
OSC INput	2	13	RF Tank
Duty Cycle (Adjust)	3	12	RF Modulator Output
GND	4	11	V_{CC}
Color B Input	5	10	Chrominance Input
Color Ref Input	6	9	Luminance Input
Color A Input	7	8	Chroma Modulator Output

TV Video Modulator, V_{CC} = 5V — **8–Lead DIP, See Diag. 246**

NTE856

RF Tank	1	8	N.C.
RF Tank	2	7	RF Output
GND	3	6	V_{CC}
Video Input	4	5	Sound/Chroma Input

See Diagrams, beginning on Page 1–252

Low Noise, JFET Input OP Amp, V_{CC} = 18V — **8–Lead DIP, See Diag. 245** / ***SOIC–8, See Diag. 550**

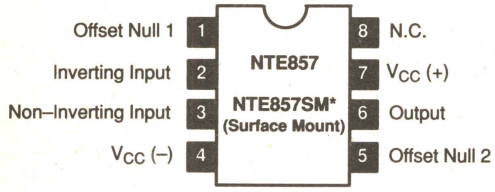

Dual, Low Noise, JFET Input OP Amp, V_{CC} = 18V — **8–Lead DIP, See Diag. 245** / ***SOIC–8, See Diag. 550**

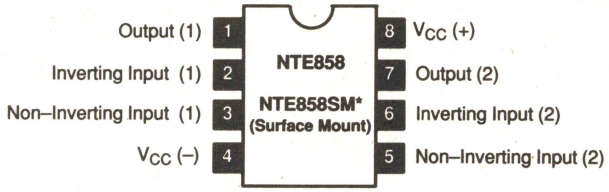

Quad, Low Noise, JFET Input OP Amp, V_{CC} = 18V — **14–Lead DIP, See Diag. 247** / ***SOIC–14, See Diag. 551**

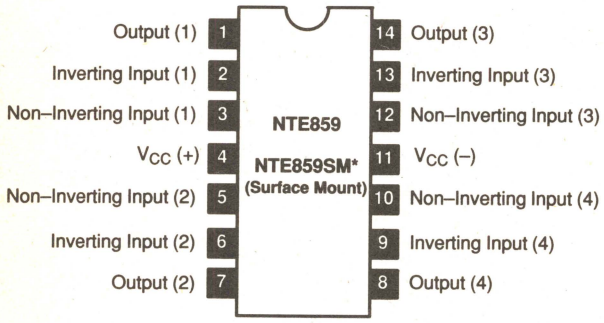

High Gain, Low Power, Narrow Band, FM IF System, V_{CC} = 12V — **18–Lead DIP, See Diag. 287**

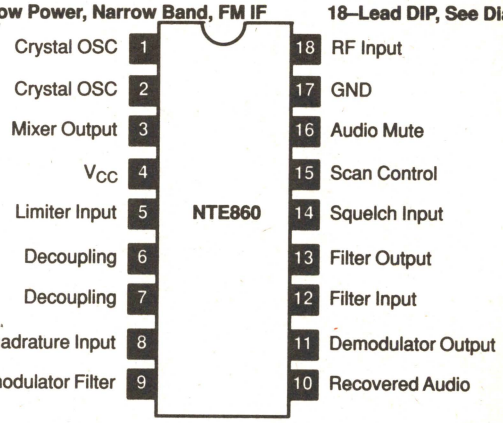

Quad, Normally Open, SPST JFET Analog Switch w/Disable, V_{CC} = 36V — **16–Lead DIP, See Diag. 249**

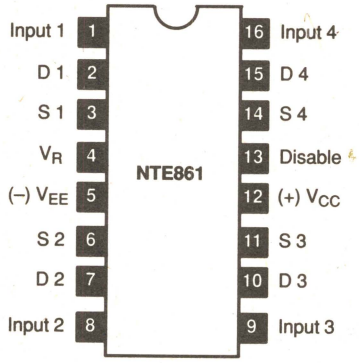

Audio Power Amp, 5W, V_{CC} = 28V — **14–Lead DIP, See Diag. 287**

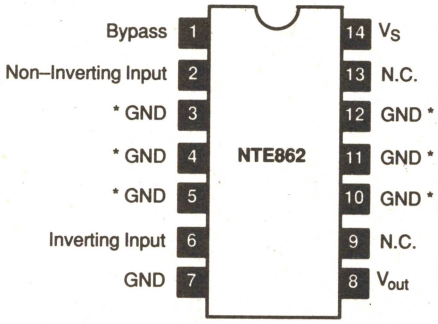

* NOTE: Heat Sink Pins

OP Amp/Comparator, V_{CC} = ±15V — **8–Lead DIP, See Diag. 245**

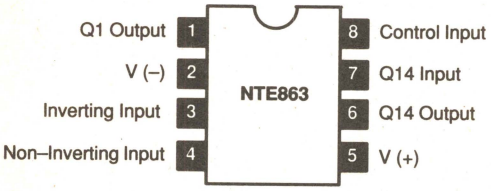

Precision Waveform Generator, V_{CC} = 36V or ±18V — **14–Lead DIP, See Diag. 247**

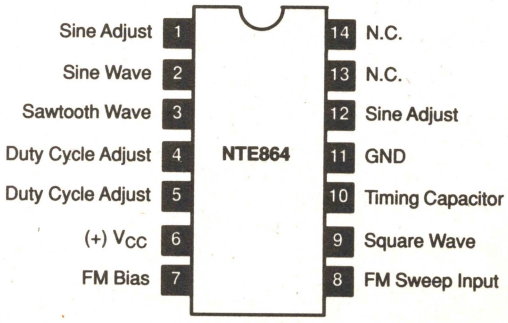

See Diagrams, beginning on Page 1–252

BIMOS Input OP Amp/Freq Band Select Switch/Quad Comparator, V_{CC} = 12V, V_{DD} = 5V — **18–Lead DIP, See Diag. 287**

NTE867

OP Amp Inverting Input	1	18	V_{GG} (GND)
OP Amp Non–Inverting Input N.C. (Bond Optn)	2	17	ISS Current Source
Logic Input "A"	3	16	OP Amp Output
Logic Input "B"	4	15	Vertical Input
VHF High Output	5	14	Vertical Output
CATV Output Super Bandswitch	6	13	AFC Center Output
VHF B + Output	7	12	V_{DD}
V_{CC}	8	11	AFT Window Output
UHF B + Output	9	10	AFT Input

TV Horiz/Vert Countdown Digital Sync System, V_{CC} = 10V — **24–Lead DIP, See Diag. 252**

NTE868

Horizontal Sync	1	24	Vertical Sync
Skew Switch	2	23	Vertical Blanking
Loop 1	3	22	S Shaping
Clock Tank	4	21	Vertical Ramp
Shunt Reg	5	20	Vertical Input
Flyback Input	6	19	Vertical Feedback
Reg Drive	7	18	Vertical Drive
GND	8	17	Vertical B +
Reg Filter	9	16	Horizontal Drive
B + Sense	10	15	Duty Cycle Switch
Size Comp	11	14	Duty Cycle Sense
Ramp	12	13	Loop 2

Dual, High Speed, Programmable Current Mode (Norton) Amp — **14–Lead DIP, See Diag. 247**

NTE869

I_{SET} (Out)	1	14	V_{Out} B
V_{Out} A	2	13	Comp B
Comp A	3	12	V +
GND A	4	11	GND B
N.C.	5	10	I_{In} (–) B
I_{In} (–) A	6	9	I_{In} (+) B
I_{In} (+) A	7	8	I_{SET} (In)

Wide Band OP Amp, V_{CC} = 36V — **8–Lead Metal Can, See Diag. 200**

NTE871
Top View

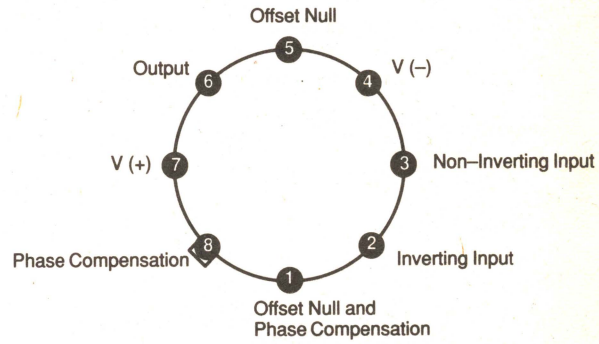

Luminance/Chroma Proc/Demod, V_{CC} = 15V — **28–Lead DIP, See Diag. 253**

NTE873

Sharpness Control	1	28	VCO "C" Input
Luma "R" Input	2	27	Noise Processing Switch
Auto Beam Limiter	3	26	VCO "R" Input
Luma "L" Input	4	25	Tint Control
Picture Control	5	24	VCO Output
Luma "C" Input	6	23	AFC Filter
Clamp Filter	7	22	V_{CC}
GND	8	21	Red Output
Brightness Control	9	20	Green Output
Chroma Amp Input 1	10	19	Blue Output
ACC Filter	11	18	Demod Input
Chroma Amp Output 1	12	17	Auto Color Switch
Color Level Control	13	16	Chroma Amp Output 2
Chroma Amp Input 2	14	15	Sandcastle Input

Horizontal/Vertical Processor, V_{CC} = 15V — **28–Lead DIP, See Diag. 253**

NTE874

Integrated Vertical Input	1	28	Sync Output
Mode Select	2	27	Composite Video Input
Horizontal Output	3	26	Sync Sep Filter
Horizontal Sawtooth Input	4	25	OSC Tank
Horizontal Drive Output	5	24	OSC Tank Lag Input
B + Adjust Ref	6	23	OSC Tank Lead Input
V_{CC}	7	22	GND
Beam Current Feedback Ref	8	21	APC Filter
AGC Gate Output	9	20	Flyback Sawtooth Ramp
Shunt Reg	10	19	Flyback Sawtooth Filter
Vertical Ramp Shape	11	18	Flyback Input 1
Vertical Height Adjust	12	17	Flyback Input 2
Vertical Feedback	13	16	Sandcastle Output
Vertical Output	14	15	Vertical GND

See Diagrams, beginning on Page 1–252

Video IF Amp/PLL Detector System, V_{CC} = 12V — **28–Lead DIP, See Diag. 253**

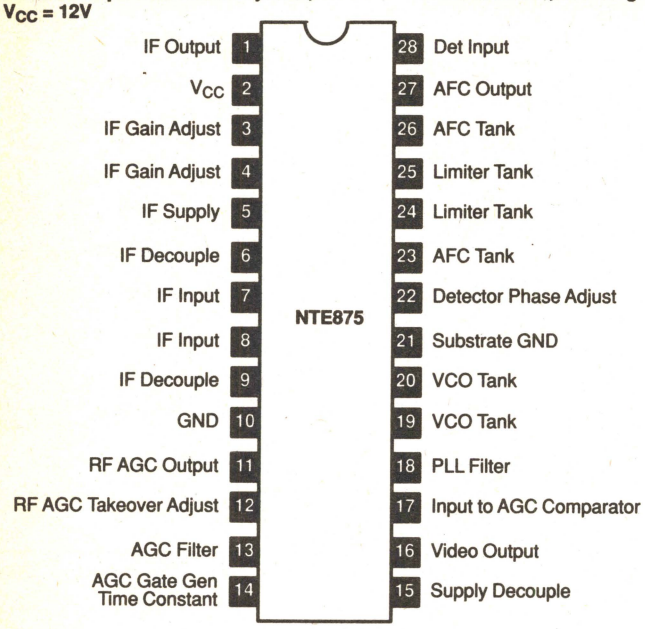

Dual, Low Power OP Amp, V_{CC} = 36V or ±18V — **8–Lead Metal Can, See Diag. 200**

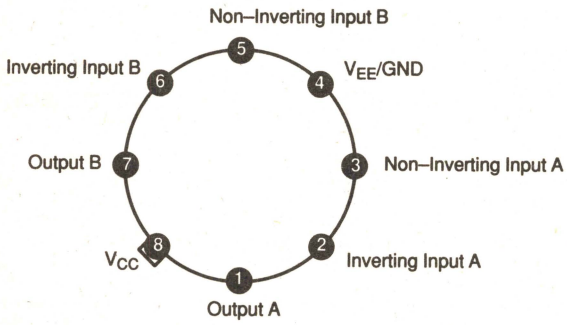

TV Color Processor, V_{CC} = 12V — **20–Lead DIP, See Diag. 490**

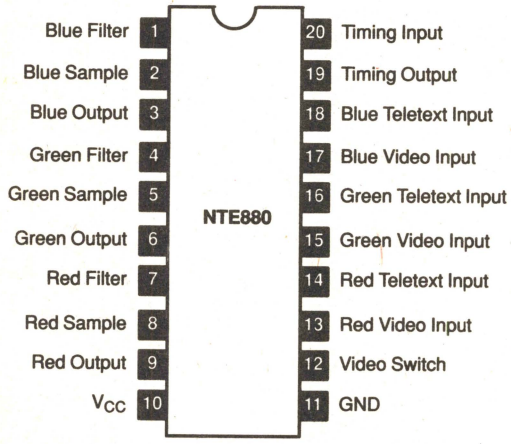

LED Flasher/OSC, V_{CC} = 6V Max — **8–Lead DIP, See Diag. 246**

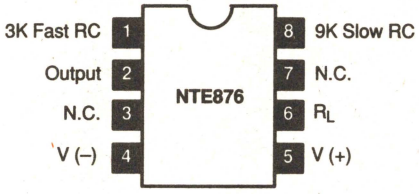

Video IF Amp/PLL Det — **28–Lead DIP, See Diag. 253**

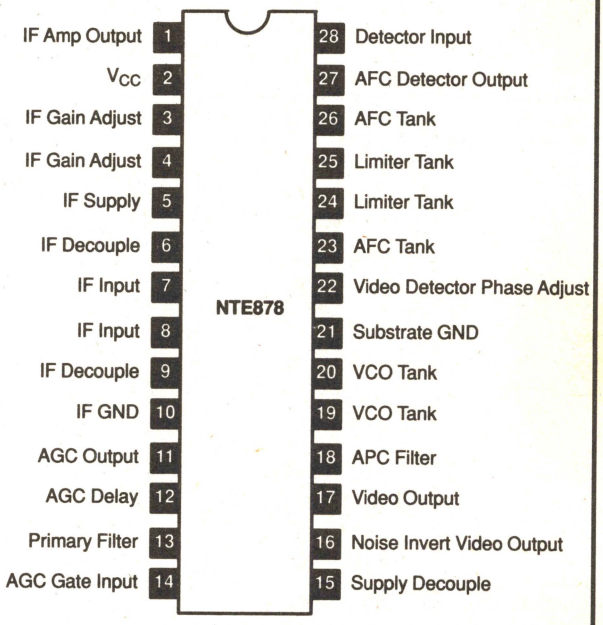

Low Power, JFET OP Amp, V_{CC} = ±18V Max — **8–Lead DIP, See Diag. 245**

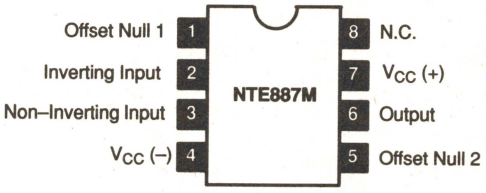

Low Power, Programmable OP Amp, V_{CC} = ±18V — **8–Lead DIP, See Diag. 245**

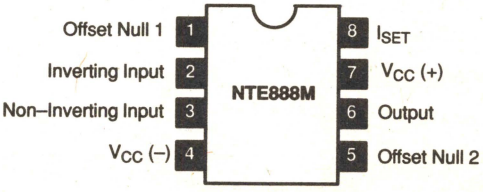

See Diagrams, beginning on Page 1–252

Dual, Low Power, JFET OP Amp, V_{CC} = 18V — **8–Lead DIP, See Diag. 245**

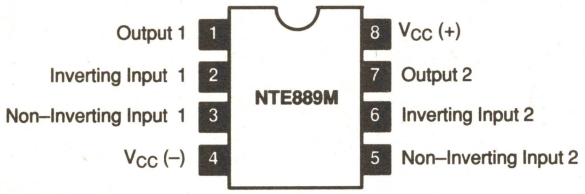

Balanced Differential DC Amp, V_{CC} = ±6V — **10–Lead Metal Can, See Diag. 206**

DISCONTINUED

NTE900
Top View

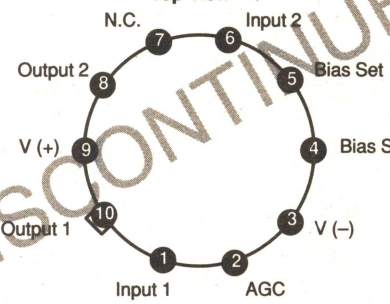

Video & Wide Band Amp, V_{CC} = ±6V — **12–Lead Metal Can, See Diag. 204**

DISCONTINUED

NTE901
Top View

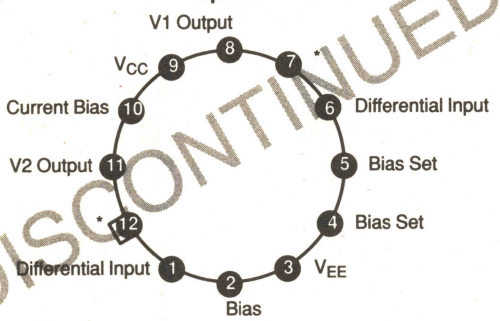

* NOTE: Internal Connection Output. **DO NOT USE.**

Operational Transconductance Amp, V_{CC} = 36V — **8–Lead Metal Can, See Diag. 200**

NTE902
Top View

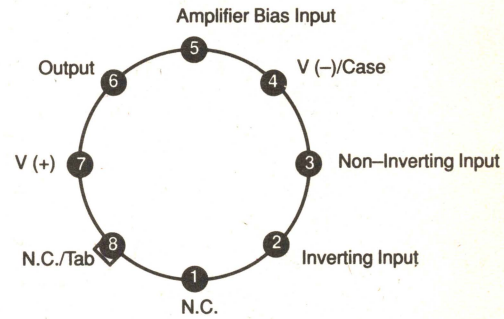

OP Amp, V_{CC} = ±20V — **12–Lead Metal Can, See Diag. 204**

NTE903
Top View

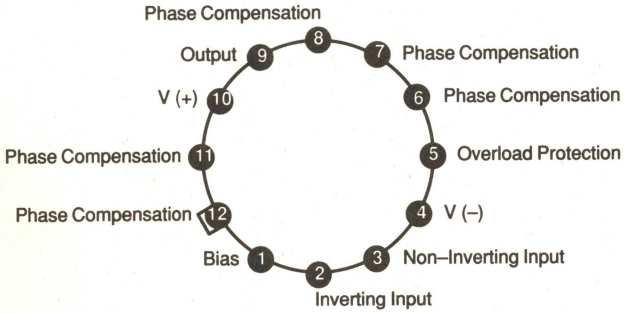

General Purpose Transistor Array — **12–Lead Metal Can, See Diag. 204**

NTE904
Top View

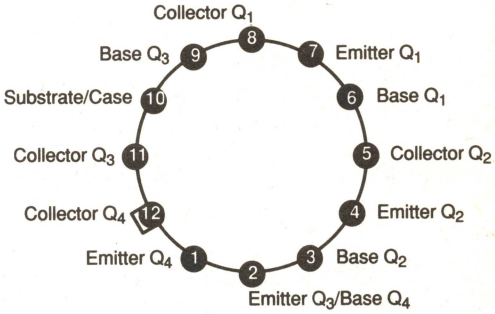

Diode Array — **10–Lead Metal Can, See Diag. 206**

NTE905
Top View

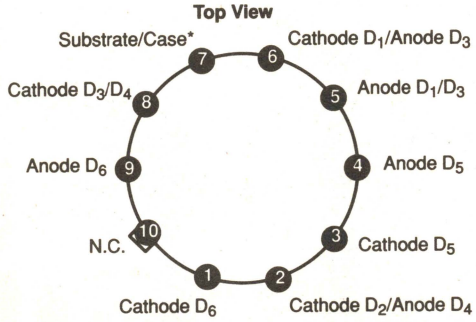

* NOTE: Connect to Most Negative Circuit Potential

Dual, High Frequency, Differential Amp, V_{CC} = ±6V — **12–Lead Metal Can, See Diag. 204**

NTE906
Top View

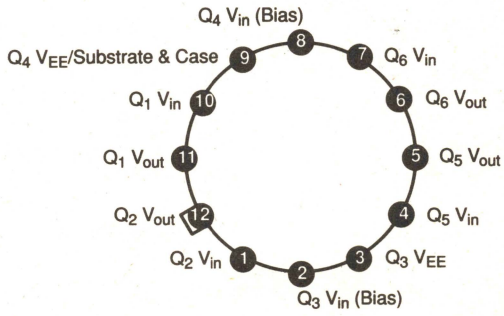

See Diagrams, beginning on Page 1–252

Diode Array — **12–Lead Metal Can, See Diag. 204**

NTE907
Top View

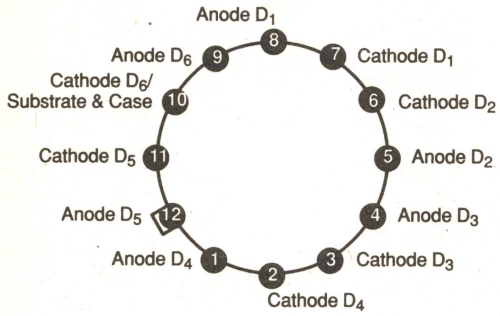

12 Volt OP Amp, V_{CC} = ±20V — **14–Lead DIP, See Diag. 247**

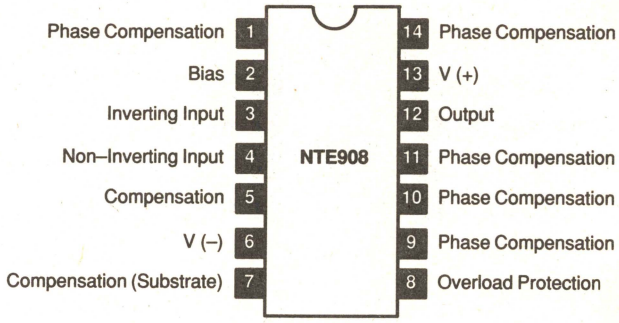

OP Amp, V_{CC} = ±18V — **8–Lead Metal Can, See Diag. 200**

NTE909
Top View

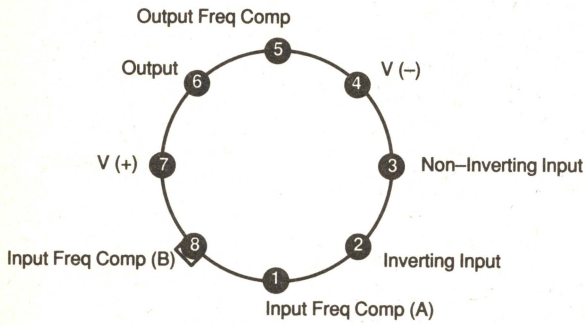

OP Amp, V_{CC} = ±18V — **14–Lead DIP, See Diag. 247**

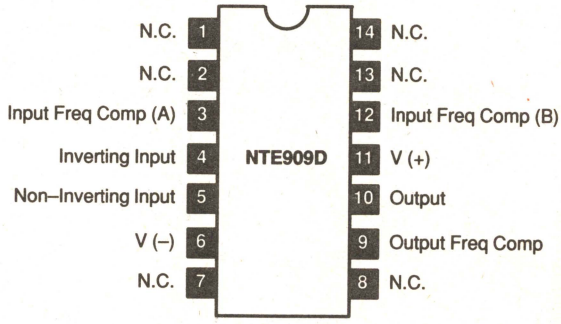

High Speed Voltage Comparator, V_{CC} = 14V — **8–Lead Metal Can, See Diag. 200**

NTE910
Top View

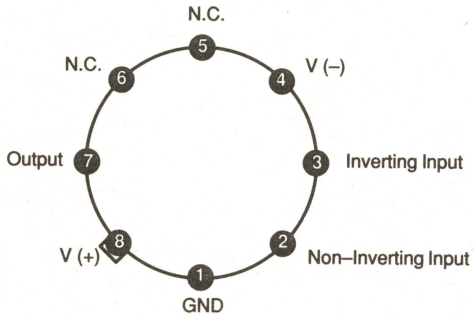

High Speed Voltage Comparator, V_{CC} = 14V — **14–Lead DIP, See Diag. 247**

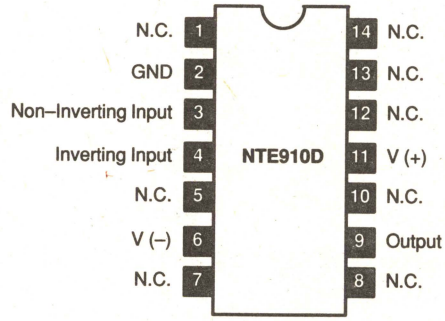

Dual Voltage Comparator, V_{CC} = 14V — **10–Lead Metal Can, See Diag. 206**

NTE911
Top View

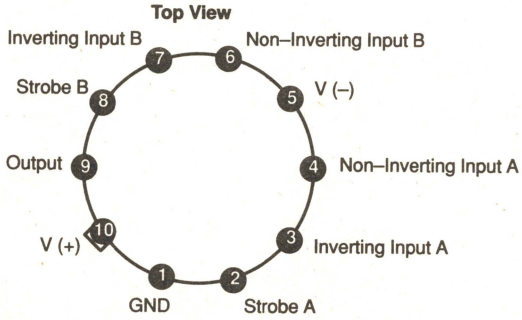

General Purpose Transistor Array — **14–Lead DIP, See Diag. 247**

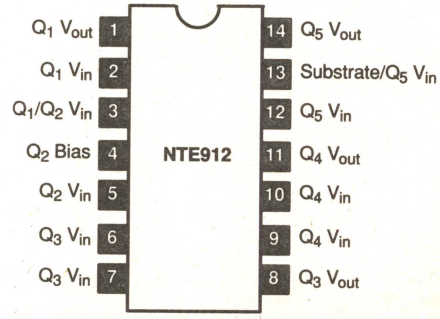

See Diagrams, beginning on Page 1–252

Zero–Voltage Switch for Thyristor Control Applications, V_{CC} = 14V — **14–Lead DIP, See Diag. 247**

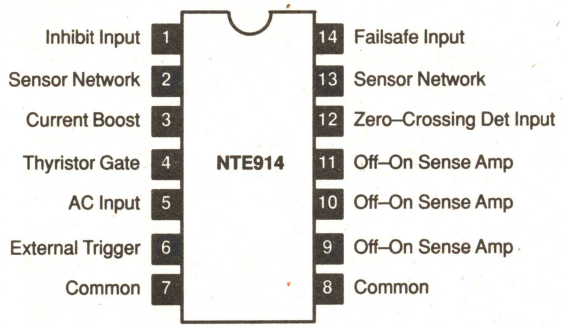

High Speed OP Amp, V_{CC} = ±18V — **10–Lead Metal Can, See Diag. 206**

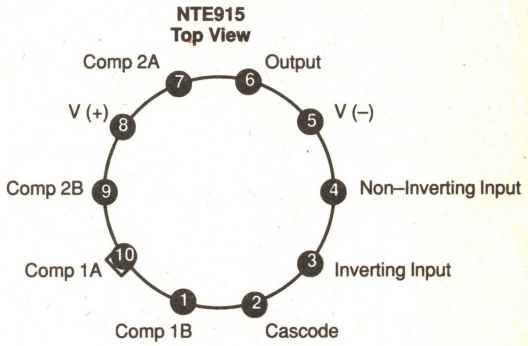

Common Emitter, High Current, NPN Transistor Array — **16–Lead DIP, See Diag. 248**

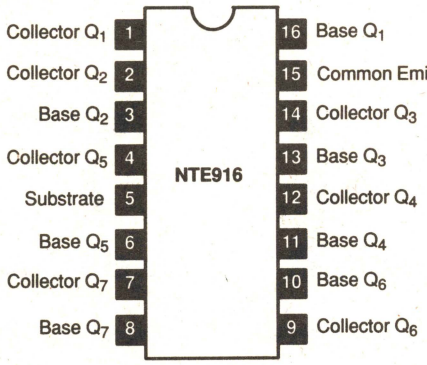

Dual, Independent Transistor Array, Differential Amp — **14–Lead DIP, See Diag. 247**

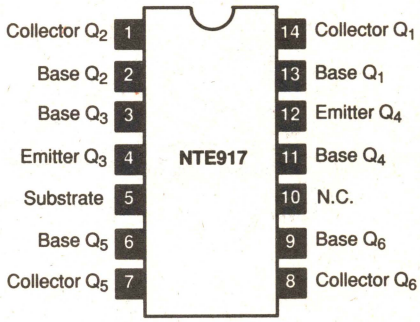

High Speed OP Amp, V_{CC} = ±20V — **8–Lead Metal Can, See Diag. 200**

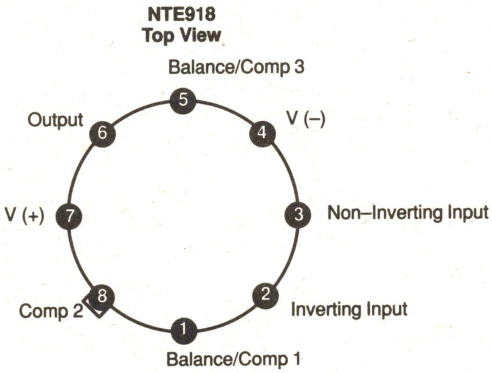

High Speed OP Amp, V_{CC} = ±20V — **8–Lead DIP, See Diag. 246**
***SOIC–8, See Diag. 550**

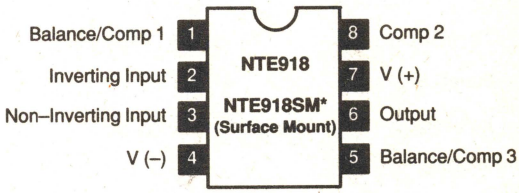

High Speed, Dual Comparator, V_{CC} = 36V — **10–Lead Metal Can, See Diag. 206**

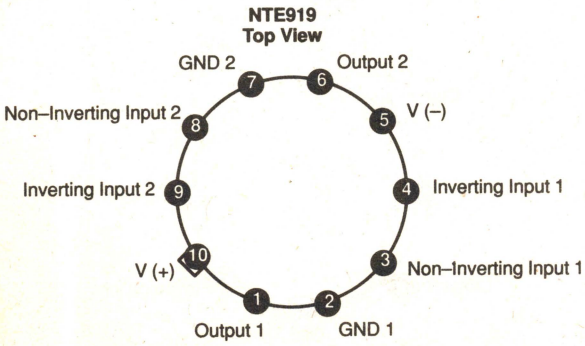

High Speed, Dual Comparator, V_{CC} = 36V — **14–Lead DIP, See Diag. 247**

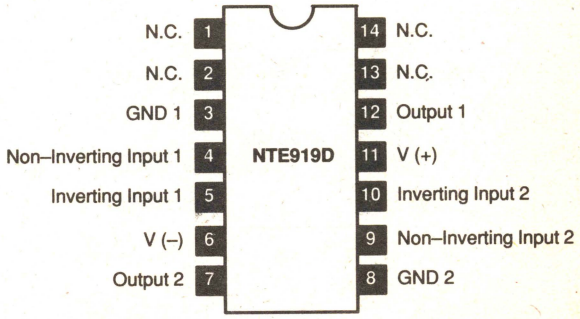

See Diagrams, beginning on Page 1–252

Dual, ±15V Tracking Regulator, V_{CC} = 30V — **14–Lead DIP, See Diag. 247**

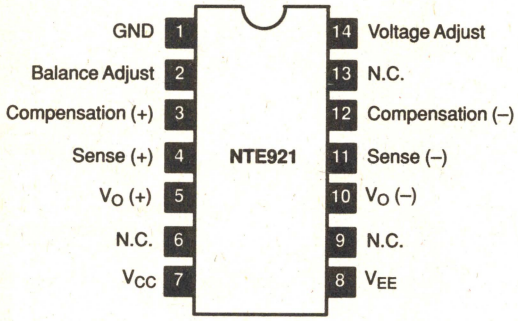

Voltage Comparator, V_{CC} = 36V — **8–Lead Metal Can, See Diag. 200**

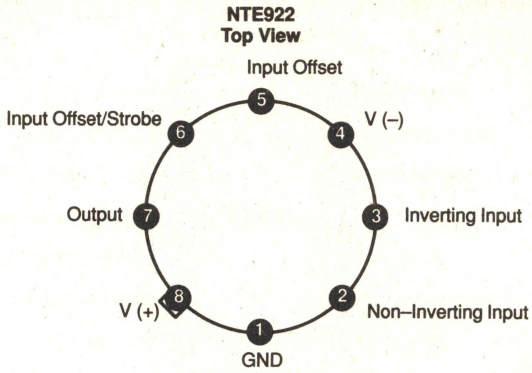

Voltage Comparator, V_{CC} = 36V — **8–Lead DIP, See Diag. 246**
***SOIC–8, See Diag. 550**

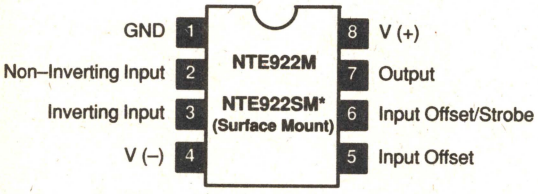

Precision Voltage Regulator — **10–Lead Metal Can, See Diag. 201**

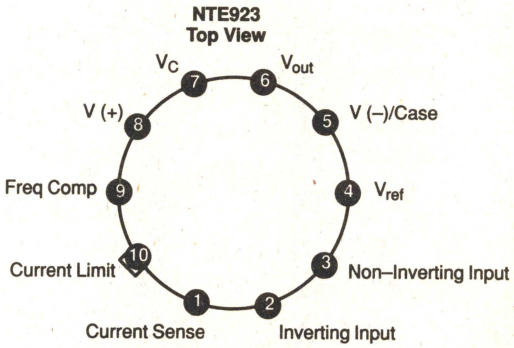

Precision Voltage Regulator — **14–Lead DIP, See Diag. 247**

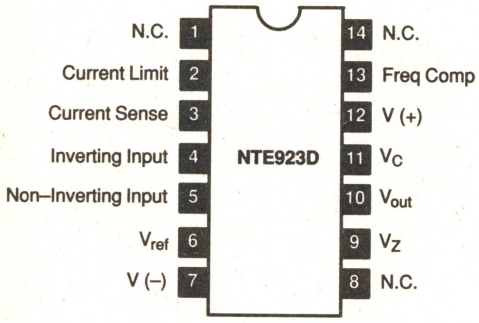

Voltage Follower, OP Amp, V_{CC} = ±18V — **8–Lead Metal Can, See Diag. 200**

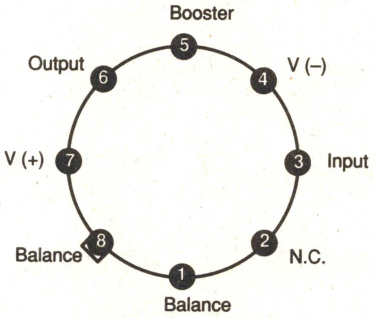

Voltage Follower, OP Amp, V_{CC} = ±18V — **8–Lead DIP, See Diag. 246**

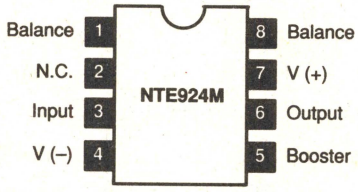

Instrumentation OP Amp, V_{CC} = ±22V — **8–Lead Metal Can, See Diag. 200**

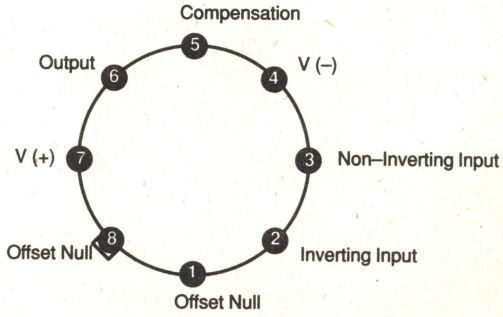

See Diagrams, beginning on Page 1–252

Quad Timer, V_{CC} = 16V — **16–Lead DIP, See Diag. 248**

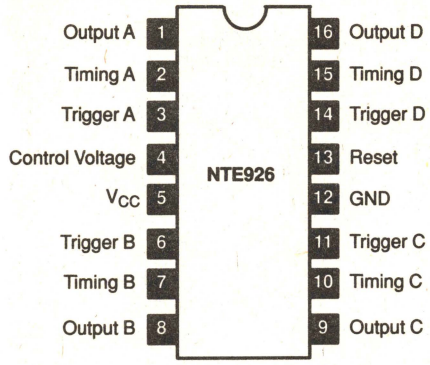

Differential Video Amp, V_{CC} = 8V — **10–Lead Metal Can, See Diag. 201**

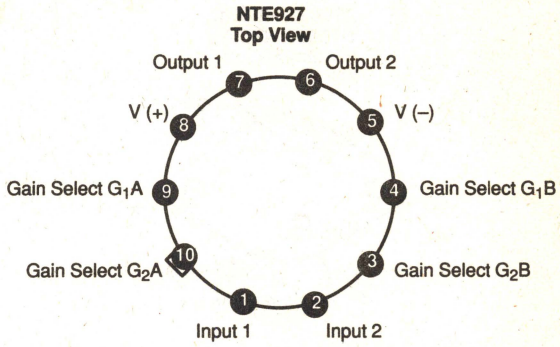

Differential Video Amp, V_{CC} = ±8V — **14–Lead DIP, See Diag. 247**
***SOIC–14, See Diag. 551**

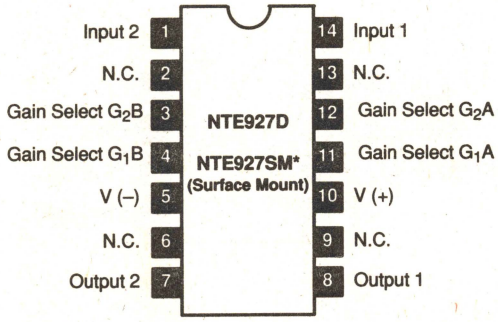

Low Power, Dual OP Amp, V_{CC} = 32V or ±16V — **8–Lead Metal Can, See Diag. 200**

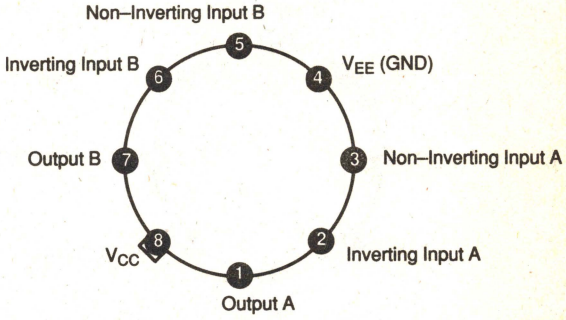

Low Power, Dual, OP Amp, V_{CC} = 32V or ±16V — **8–Lead DIP, See Diag. 246**
***SOIC–8, See Diag. 550**

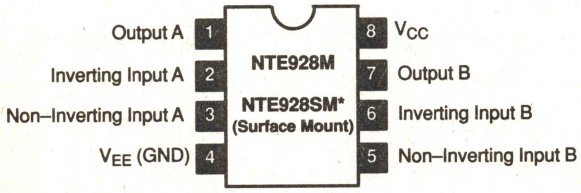

Low Power, Dual, OP Amp, V_{CC} = 32V or ±16V — **9–Lead SIP, See Diag. 213**

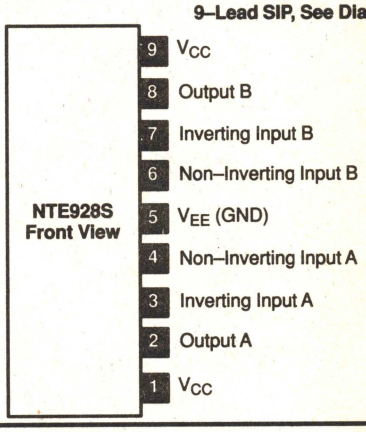

General Purpose, High Current, NPN Transistor Array — **16–Lead DIP, See Diag. 248**

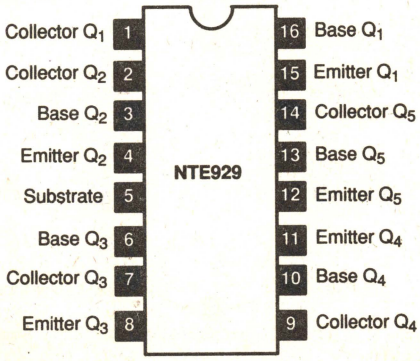

BIMOS OP Amp, V_{CC} = 16V — **8–Lead Metal Can, See Diag. 200**

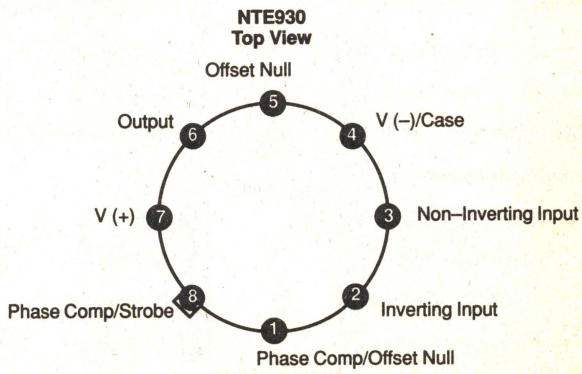

See Diagrams, beginning on Page 1–252

Positive Voltage Regulator — **TO3, See Diag. 1c**

NTE931, NTE932, NTE933, NTE934
Bottom View

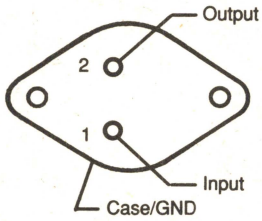

Positive Voltage Regulator, Adjustable — **TO3, See Diag. 1b**

NTE935
Bottom View

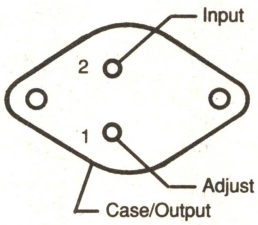

JFET Input OP Amp, V_{CC} = ±18V — **8–Lead Metal Can, See Diag. 200**

NTE937
Top View

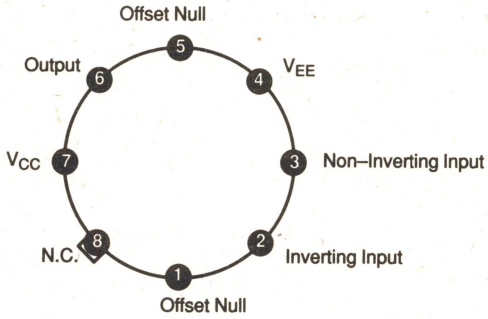

JFET Input OP Amp, V_{CC} = ±18V — **8–Lead DIP, See Diag. 245**

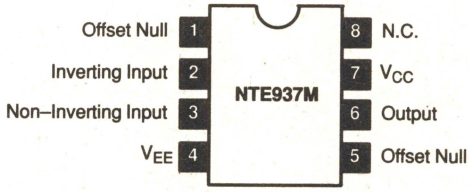

Precision OP Amp, V_{CC} = ±18V — **8–Lead Metal Can, See Diag. 200**

NTE938
Top View

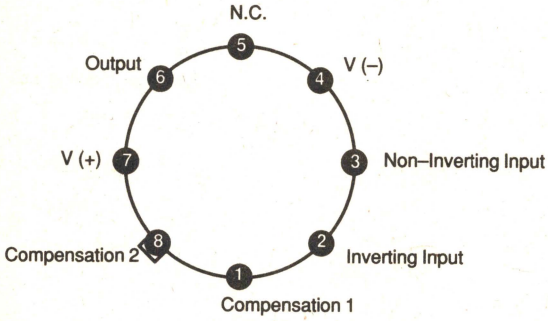

Precision OP Amp, V_{CC} = ±18V — **8–Lead DIP, See Diag. 246**

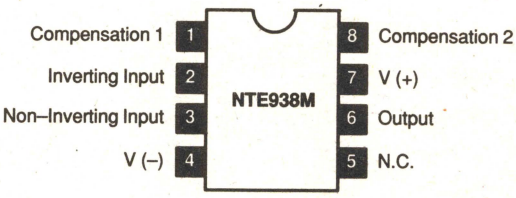

Zero–Voltage Switch/Burst Control — **16–Lead DIP, See Diag. 248**

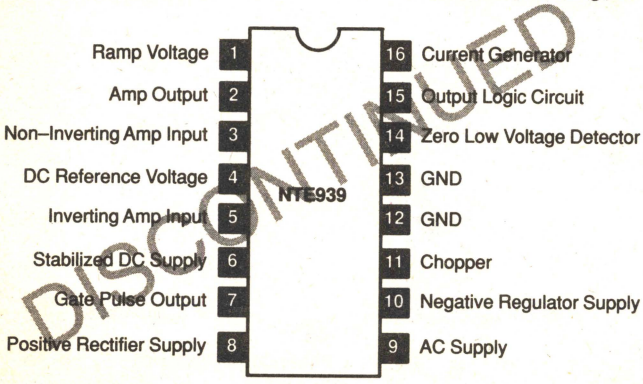

DISCONTINUED

FET Input OP Amp, V_{CC} = ±22V — **8–Lead Metal Can, See Diag. 200**

NTE940
Top View

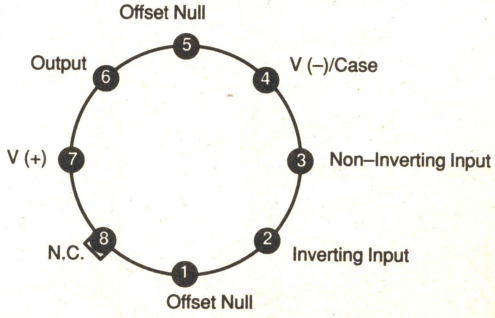

See Diagrams, beginning on Page 1–252

Frequency Compensated OP Amp, V_{CC} = ±18V — **8–Lead Metal Can, See Diag. 200**

NTE941
Top View

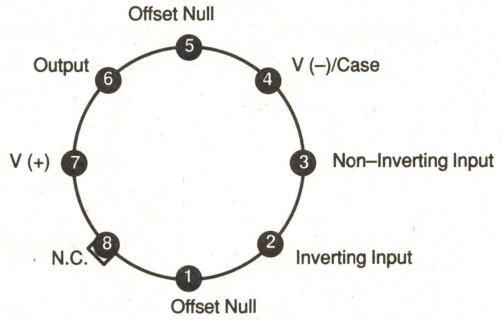

Frequency Compensated OP Amp, V_{CC} = ±18V — **14–Lead DIP, See Diag. 247**

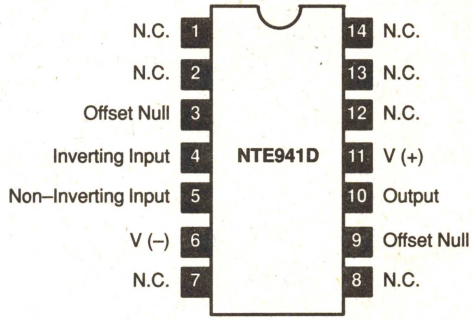

Frequency Compensated OP Amp, V_{CC} = ±18V — **8–Lead DIP, See Diag. 246**
***SOIC–8, See Diag. 550**

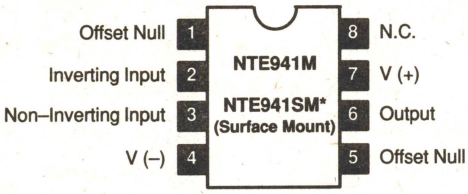

Frequency Compensated OP Amp, V_{CC} = ±18V — **7–Lead SIP, See Diag. 214**

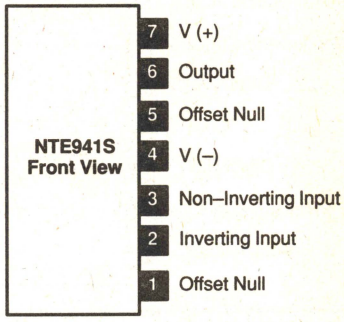

Low Noise, Dual Preamp, V_{CC} = 40V — **14–Lead DIP, See Diag. 247**

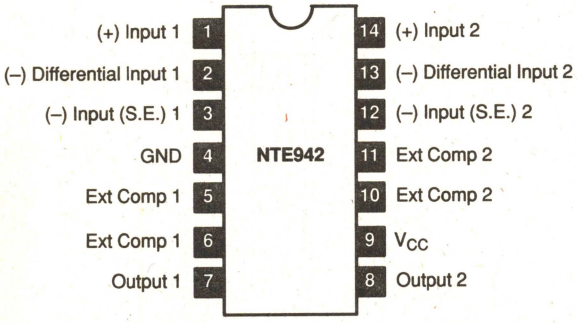

Low Power, Low Offset, Dual Voltage Comparator, V_{CC} = 36V — **8–Lead Metal Can, See Diag. 200**

NTE943
Top View

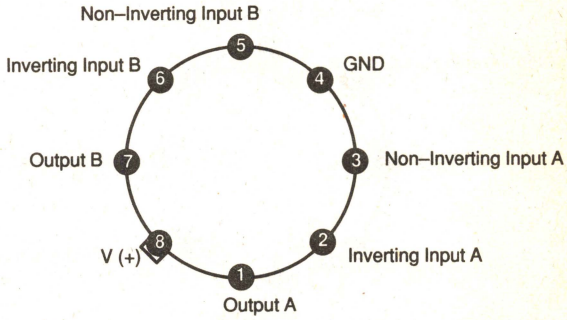

Low Power, Low Offset, Dual Voltage Comparator, V_{CC} = 36V — **8–Lead DIP, See Diag. 245**
***SOIC–8, See Diag. 550**

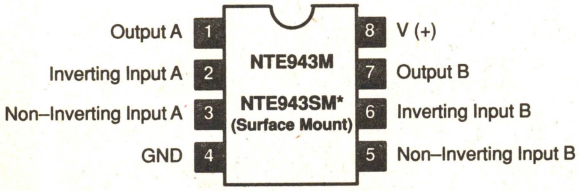

Programmable OP Amp, V_{CC} = 26V — **8–Lead Metal Can, See Diag. 200**

NTE944
Top View

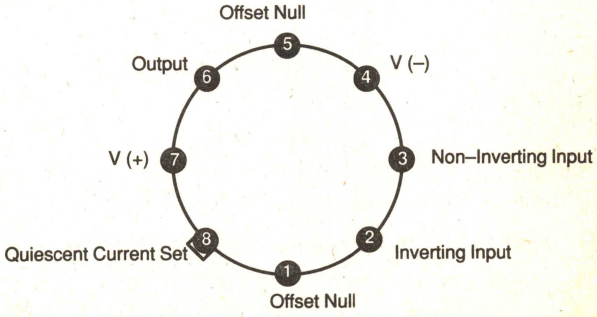

See Diagrams, beginning on Page 1–252

OP Amp, V_{CC} = ±20V — **8–Lead Metal Can, See Diag. 200**

NTE945
Top View

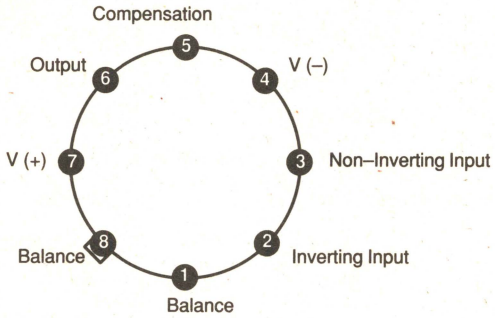

Dual OP Amp, V_{CC} = ±18V — **10–Lead Metal Can, See Diag. 206**

NTE947
Top View

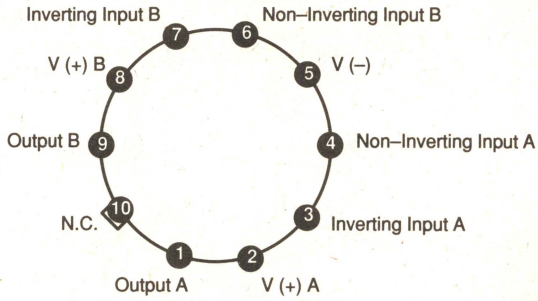

Dual OP Amp, V_{CC} = ±18V — **14–Lead DIP, See Diag. 247**

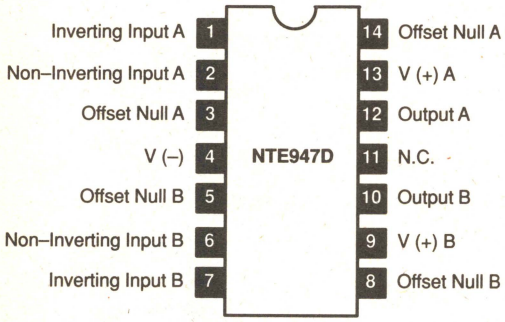

Quad OP Amp, V_{CC} = ±18V — **14–Lead SIP, See Diag. 247**
***SOIC–14, See Diag. 551**

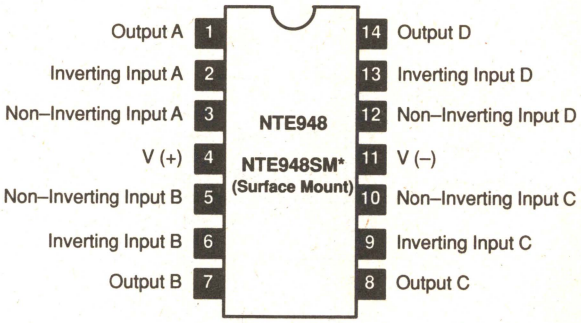

Dual Audio OP Amp/Preamp, V_{CC} = ±18V — **8–Lead Metal Can, See Diag. 200**

NTE949
Top View

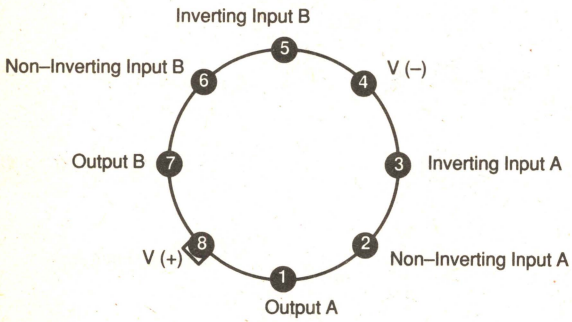

Positive Voltage Regulator — **TO92, See Diag. 9l**

NTE950, NTE951, NTE977, NTE981, NTE988
(Flat Side Front)

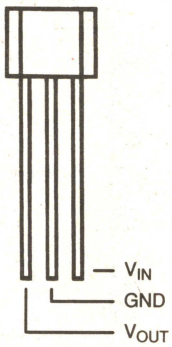

Precision 2.5V Shunt — **TO92, See Diag. 9r**

NTE952
(Flat Side Front)

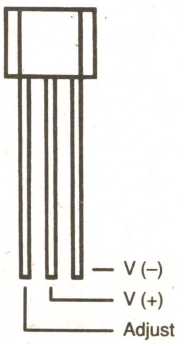

4–Terminal Positive Voltage Regulator, Adjustable — **4–Lead Power Tab, See Diag. 308a**

NTE953

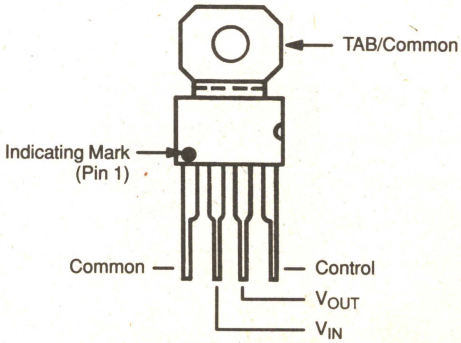

See Diagrams, beginning on Page 1–252

4–Terminal Negative Voltage Regulator, Adjustable — **4–Lead Power Tab, See Diag. 308b**

NTE954

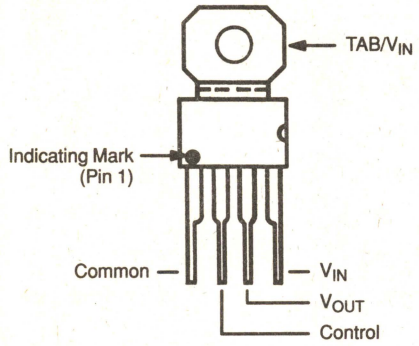

Monolithic Timer, V_{CC} = 18V — **8–Lead DIP, See Diag. 245**
****8–Lead DIP, See Diag. 246**
***SOIC–8, See Diag. 550**

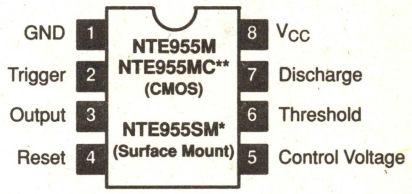

Monolithic Timer, V_{CC} = 18V — **8–Lead SIP, See Diag. 224**

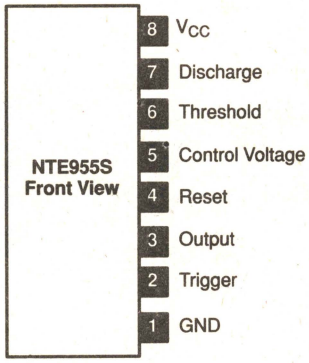

Positive Voltage Regulator, Adjustable — **TO220, See Diag. 11h**

NTE956

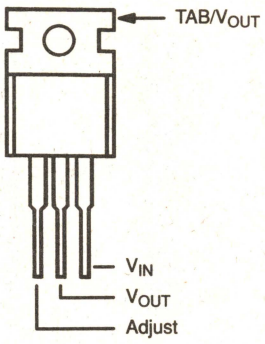

Negative Voltage Regulator, Adjustable — **TO220, See Diag. 11l**

NTE957

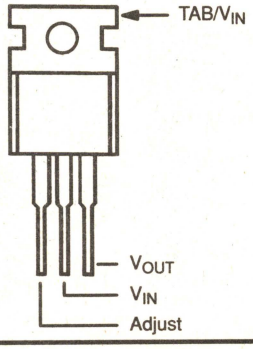

Positive Voltage Regulator — **TO220, See Diag. 11f**

NTE958, NTE960, NTE962, NTE964
NTE966, NTE968, NTE972, NTE1932

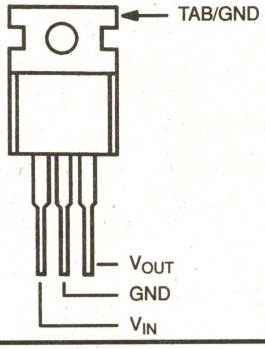

Negative Voltage Regulator — **TO220, See Diag. 11g**

NTE959, NTE961, NTE963, NTE965
NTE967, NTE969, NTE971

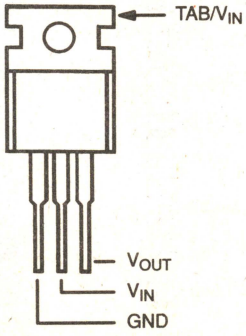

Positive Voltage Regulator — **TO3, See Diag. 1b**

NTE970
Bottom View

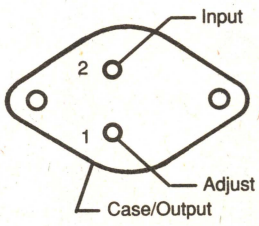

See Diagrams, beginning on Page 1–252

Double Balanced Modulator/Demod, V_{CC} = 30V — **10–Lead Metal Can, See Diag. 206**

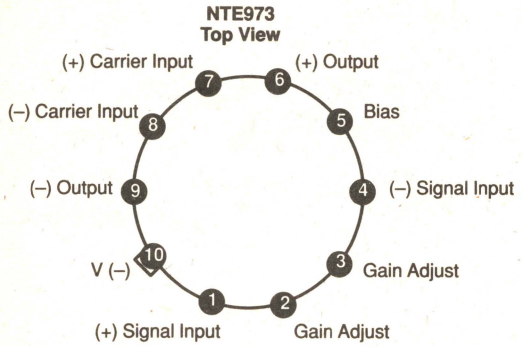

Double Balanced Modulator/Demod, V_{CC} = 30V — **14–Lead DIP, See Diag. 247**

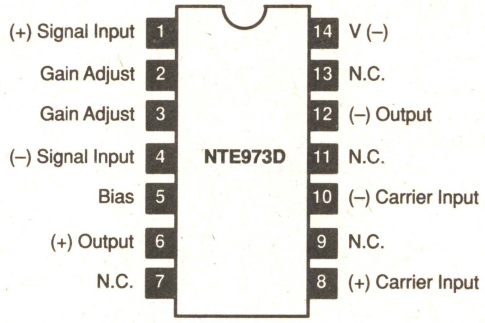

Phase–Frequency Detector, V_{CC} = 5V — **14–Lead SIP, See Diag. 247**

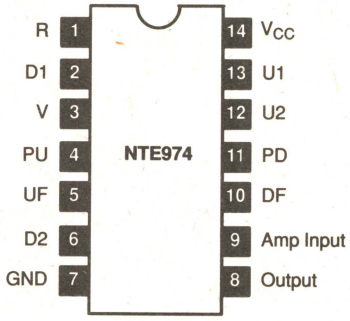

General Purpose OP Amp, V_{CC} = ±22V — **8–Lead DIP, See Diag. 245**
***SOIC–8, See Diag. 550**

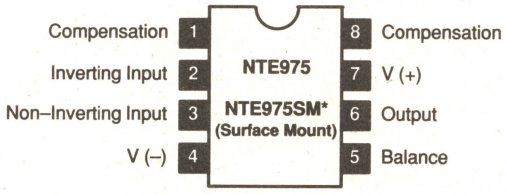

OP Amp, V_{CC} = ±18V — **8–Lead DIP, See Diag. 246**

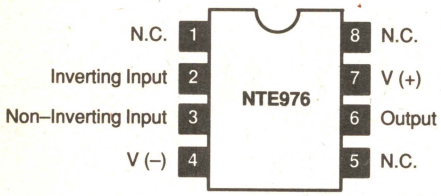

Dual Timer, V_{CC} = 18V — **14–Lead DIP, See Diag. 247**
***SOIC–14, See Diag. 550**

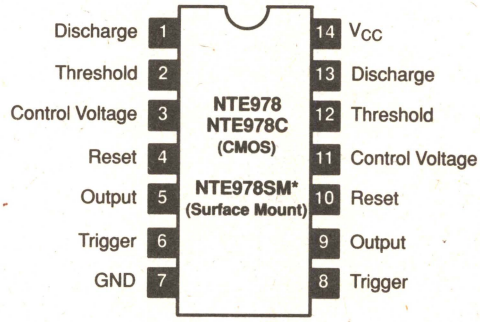

CMOS Micropower Phase–Locked Loop (PLL), V_{DD} = –0.5V ~ +20V — **16–Lead DIP, See Diag. 248**

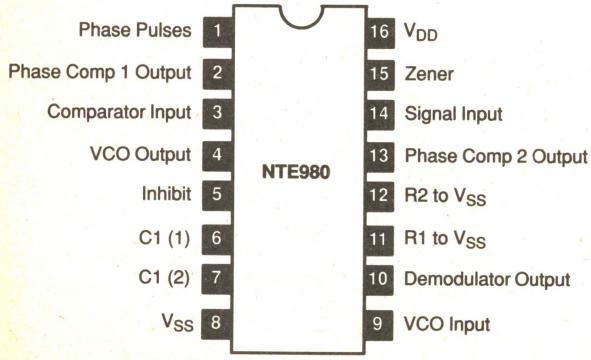

TV Chroma System, V_{CC} = 24V — **16–Lead DIP, See Diag. 248**

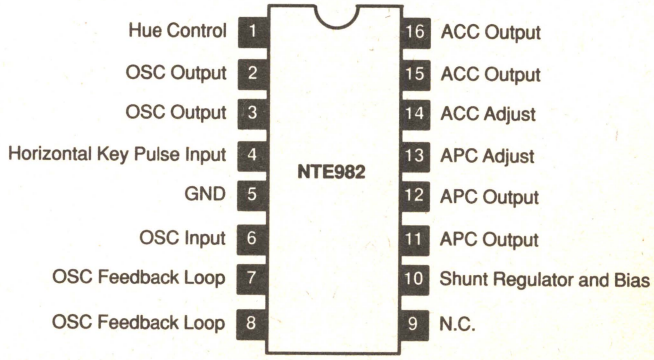

See Diagrams, beginning on Page 1–252

Low Noise, Dual Preamp, V_{CC} = 16V — **14–Lead DIP, See Diag. 247**

NTE983

GND	1	14	Feedback B
Feedback A	2	13	Input B
Input A	3	12	Bias
Input A	4	11	Output B
Output A	5	10	Output B1
Output A1	6	9	Delay B
Delay A	7	8	V_{CC}

TV Video IF System, V_{CC} = 16V — **16–Lead DIP, See Diag. 248**

NTE984

Key Pulse Input	1	16	Video Output
AGC Filter	2	15	(+) V_S 2
A1 Input	3	14	Substrate
GND	4	13	Detector Bias
Clamp Capacitor	5	12	(+) V_S 1 Shunt Regulator
A1 Output/A2 Input	6	11	A3 Input and Detector
AGC Delay	7	10	Tuner AGC
IF AGC Bias	8	9	A2 Output

TV Luminance Processor — **16–Lead SIP, See Diag. 248**

NTE985

Video Input	1	16	N.C.
Peaking Input	2	15	N.C.
Peaking Input	3	14	N.C.
Video Output	4	13	Shunt Regulator and Bias
Substrate	5	12	Clamp Inhibit Input
Clamp Input	6	11	Peaking Control
Clamp Video Output	7	10	Contrast Control
Blanking Input	8	9	Brightness Control

Single Chip TV Chroma System, V_{CC} = 13.2V — **24–Lead DIP, See Diag. 252**

NTE986

Chroma Input	1	24	Horiz Key Pulse Input
ACC Filter	2	23	AFPC Filter
ACC Filter	3	22	AFPC Filter
Sat Control	4	21	OSC Filter/Phase Shift Input
Overload Det/Killer Filter	5	20	OSC Filter/Phase Shift Input
Processor Section Chroma Output	6	19	OSC Filter/Phase Shift Input
GND	7	18	V_{CC}
B–Y Output	8	17	Tint Control
G–Y Output	9	16	Carrier Filter
R–Y Output	10	15	"Flesh Corrector" Carrier Output
Q Ref Input	11	14	"Flesh Corrector"/ Overload Detector Disable
I Ref Input	12	13	Demodulator Chroma Input

Quad OP Amp, V_{CC} = 32V or ±16V — **14–Lead DIP, See Diag. 246**
***SOIC–14, See Diag. 551**

NTE987
NTE987SM*
(Surface Mount)

Output 1	1	14	Output 4
Inverting Input 1	2	13	Inverting Input 4
Non–Inverting Input 1	3	12	Non–Inverting Input 4
V (+)	4	11	GND
Non–Inverting Input 2	5	10	Non–Inverting Input 3
Inverting Input 2	6	9	Inverting Input 3
Output 2	7	8	Output 3

General Purpose Phase–Locked Loop (PLL), V_{CC} = ±12V — **14–Lead DIP, See Diag. 247**

NTE989

(–) V_{CC}	1	14	N.C.
Input	2	13	N.C.
Input	3	12	N.C.
VCO Output	4	11	N.C.
Phase Comparator VCO Input	5	10	(+) V_{CC}
Reference Output	6	9	Timing Capacitor
VCO Control Voltage	7	8	Timing Resistor

Dual Power Audio Amp, V_{CC} = 26V — **14–Lead DIP, See Diag. 247**

NTE990

Bias	1	14	V_{CC}
Output 1	2	13	Output 2
GND	3	12	GND
GND	4	11	GND
GND	5	10	GND
Input 1	6	9	Input 2
Feedback 1	7	8	Feedback 2

See Diagrams, beginning on Page 1–252

CB Phase–Locked Loop (PLL) Frequency Synthesizer — **16–Lead DIP, See Diag. 249**

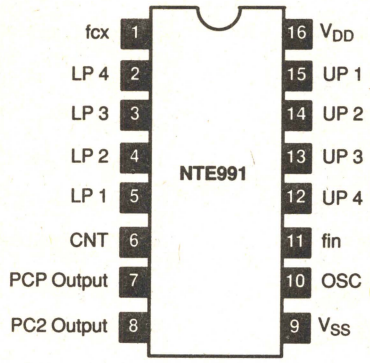

Quad, Dual Input, Internally Compensated Amp, $V_{CC} = \pm 18V$ — **14–Lead DIP, See Diag. 247**

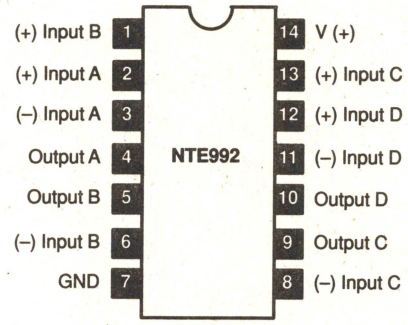

CB Prescaler — **16–Lead DIP, See Diag. 248**

AT TIME OF PUBLICATION, DATA ON NTE993, AN ACTIVE NUMBER, WAS NOT AVAILABLE

Voltage Controlled Oscillator, $V_{CC} = 26V$ — **8–Lead DIP, See Diag. 246**

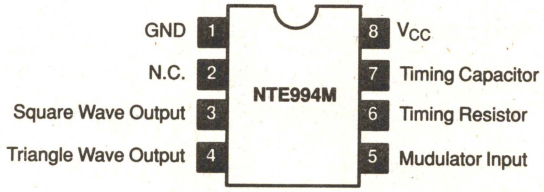

Frequency to Voltage Converter, $V_{CC} = 28V$ — **14–Lead DIP, See Diag. 247**

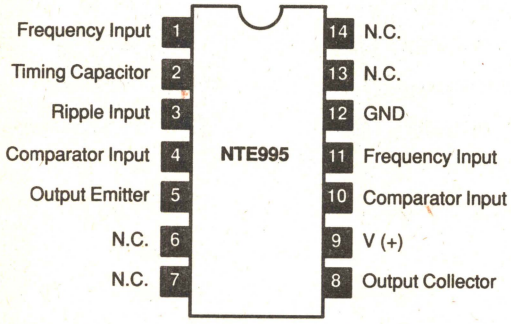

Frequency to Voltage Converter, $V_{CC} = 12V$ — **8–Lead DIP, See Diag. 246**

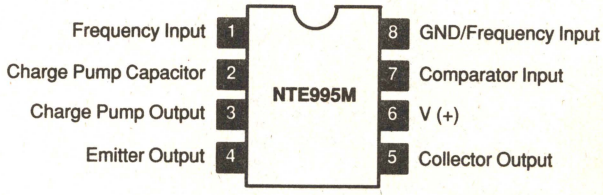

Operational Transconductance Amp, $V_{CC} = 36V$ — **8–Lead DIP, See Diag. 246**

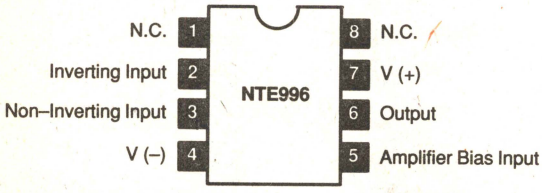

Quad OP Amp, $V_{CC} = \pm 18V$ — **14–Lead DIP, See Diag. 247**

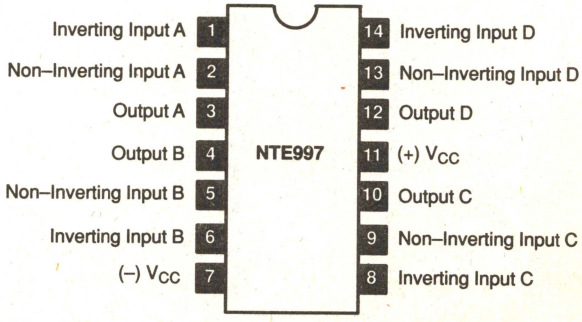

See Diagrams, beginning on Page 1–252

1.22V Reference Diode — **TO92, See Diag. 471**

NTE998
(Flat Side Front)

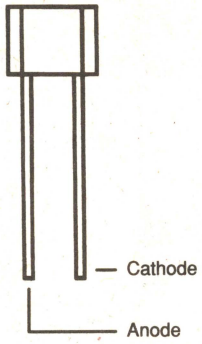

Programmable Precision Reference Output to 36V — **8–Lead DIP, See Diag. 246**

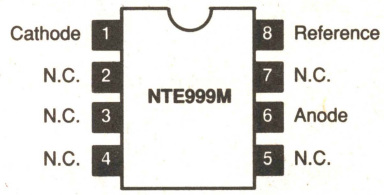

Programmable Precision Reference, Output to 36V — **SOIC–8, See Diag. 550**

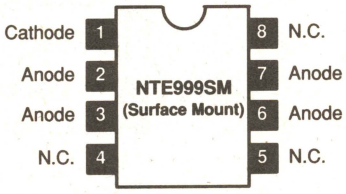

FM IF TV Amp, V_{CC} = 12V — **8–Lead Metal Can, See Diag. 200**

NTE1002
Top View

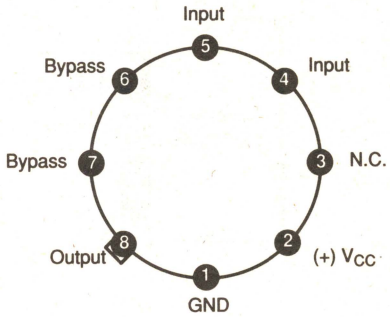

FM/AM IF Amp, V_{CC} = 10V — **14–Lead DIP, See Diag. 247**

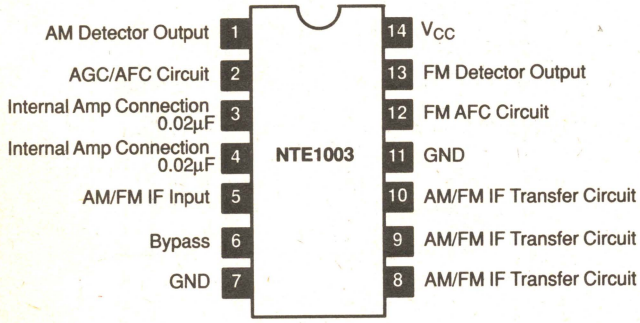

AFT System for TV, V_{CC} = 30V — **14–Lead DIP, See Diag. 250**

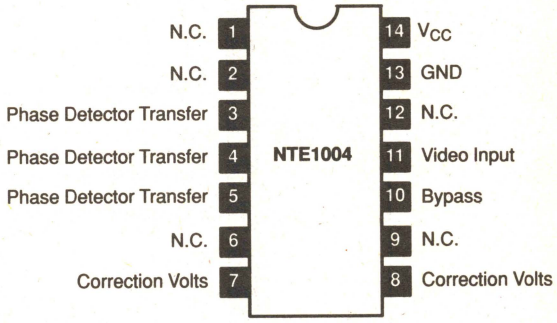

FM Stereo Demod, V_{CC} = 20V Max — **14–Lead DIP, See Diag. 247**

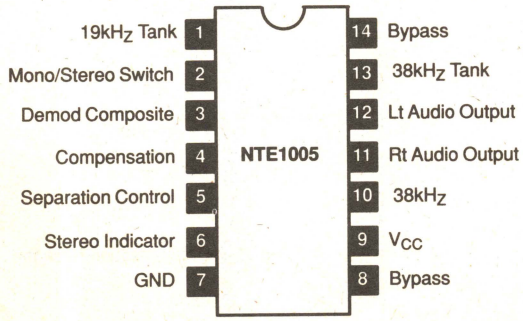

FM Stereo Demod, V_{CC} = 20V Max — **14–Lead DIP, See Diag. 247**

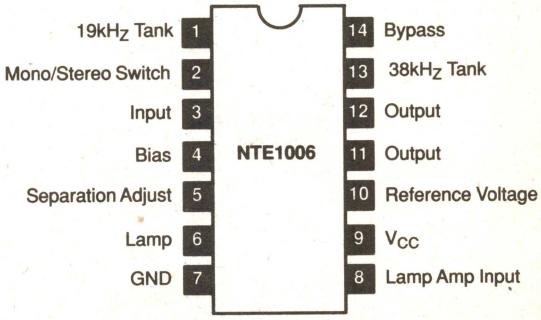

See Diagrams, beginning on Page 1–252

Audio Amp, 1W, V_{CC} = 16V — **8–Lead Special DIP, See Diag. 257**

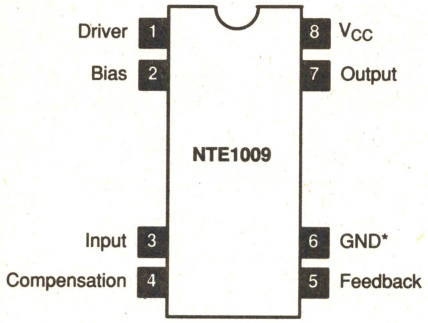

* NOTE: Connect to Tab

Audio Amp, 2W, V_{CC} = 18V — **8–Lead Special DIP, See Diag. 257**

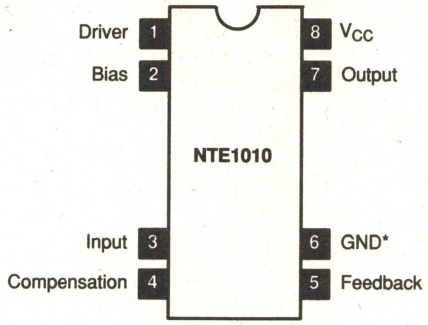

* NOTE: Connect to Tab

27MHz OSC AM IF, V_{CC} = 10V Max — **5–Lead SIP, See Diag. 283**

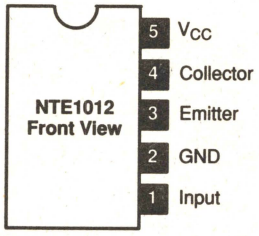

AM IF Amp, V_{CC} = 20V Max — **9–Lead SIP, See Diag. 210**

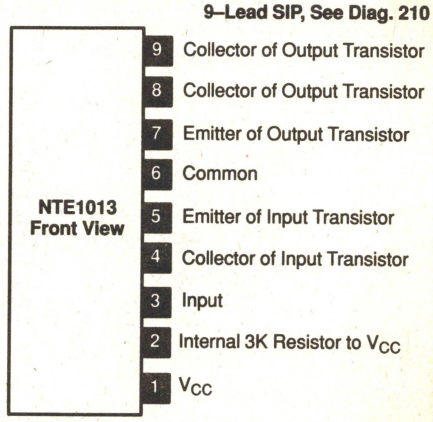

RF Amp/OSC, V_{CC} = 6V — **9–Lead SIP, See Diag. 391**

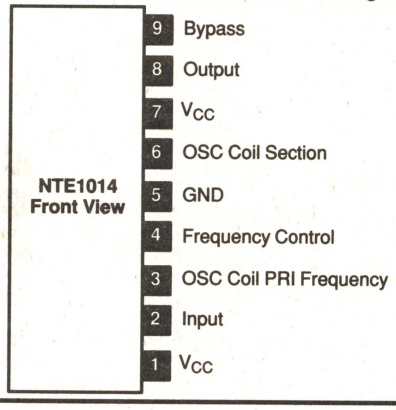

Hybrid AF Preamp — **9–Lead SIP, See Diag. 209**

NTE1015

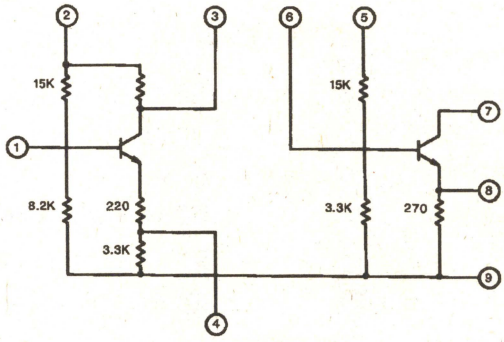

AF Small Signal Amp for Tape Recorder, V_{CC} = 15V — **9–Lead SIP, See Diag. 210**

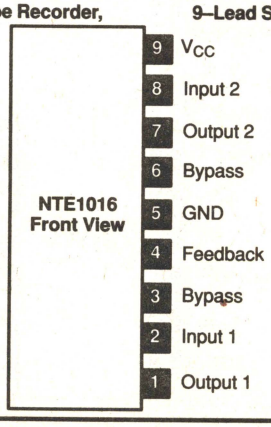

Low Noise Equalizer Amp, V_{CC} = 30V — **9–Lead SIP, See Diag. 210**

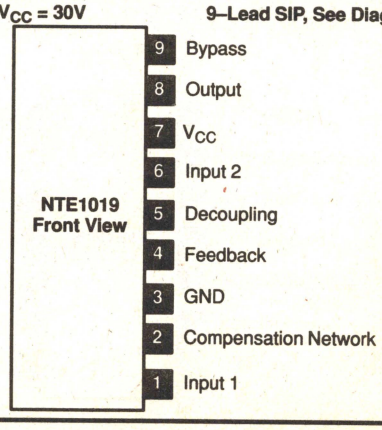

See Diagrams, beginning on Page 1–252

4–Channel Stereo Decoder, V_{CC} = 25V — **16–Lead DIP, See Diag. 249**

NTE1022

Bias	1	16	V_{CC}
Control Resistance (to Pin 10)	2	15	Control Resistance (to Pin 7)
Left Input	3	14	Right Input
Control Resistance (to Pin 10)	4	13	Control Resistance (to Pin 7)
Right Back Output	5	12	Left Back Output
Left Front Output	6	11	Right Front Output
Control Resistance (Common)	7	10	Control Resistance (Common)
GND	8	9	N.C.

Audio Power Output, 4W — **14–Lead DIP, See Diag. 259**

NTE1023

AT TIME OF PUBLICATION, DATA ON NTE1023, AN ACTIVE NUMBER, WAS NOT AVAILABLE

Hybrid, Audio Power Amp, 6.5W Min, V_{CC} = 10V Max — **10–Lead SIP, See Diag. 229**

NTE1024 Front View

10	Driver Input
9	Predriver Input
8	Bypass
7	Feedback
6	Input
5	Bypass
4	Bypass
3	V_{CC}
2	Output
1	GND

Hybrid, Audio Power Amp, 10W Min, V_{CC} = 48V — **10–Lead SIP, See Diag. 229**

NTE1027 Front View

10	Driver Input
9	Predriver Input
8	Bypass
7	Feedback
6	Input
5	Bypass
4	Bypass
3	V_{CC}
2	Output
1	GND

Hybrid, Audio Power Amp, Dual Power Supply Req'd, 20W Min, V_{CC} = ±32V — **10–Lead SIP, See Diag. 225**

NTE1028 Front View

10	
9	Substrate
8	Input
7	Input
6	N.C.
5	N.C.
4	Current Boost
3	V_{CC}
2	Output
1	GND

Audio Power Amp, 3.5W, V_{CC} = 18V — **10–Lead DIP, See Diag. 274**

NTE1029

Feedback	1	10	V_{CC}
Feedback	2	9	Output
Feedback	3	8	GND
Input	4	7	Feedback
Bypass	5	6	Feedback

Audio Power Amp, 0.5W, V_{CC} = 9V — **12–Lead DIP, See Diag. 258**

NTE1031

Predriver Output	1	12	Bypass
AF Input	2	11	Driver Input
Bypass	3	10	Feedback
GND	4	9	V_{CC}
GND	5	8	Output
N.C.	6	7	N.C.

Audio Power Amp, 1W, V_{CC} = 9V — **12–Lead DIP, See Diag. 258**

NTE1032

Predriver Output	1	12	Bypass
AF Input	2	11	Driver Input
Bypass	3	10	Feedback
GND	4	9	V_{CC}
GND	5	8	Output
N.C.	6	7	N.C.

See Diagrams, beginning on Page 1–252

Audio Power Amp, 1W, V_{CC} = 7.5V — **12–Lead DIP, See Diag. 258**

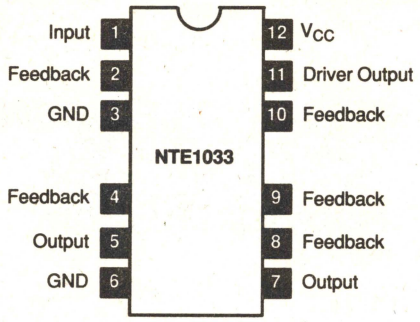

Audio Power Amp, 4W, V_{CC} = 12V — **12–Lead DIP, See Diag. 258**

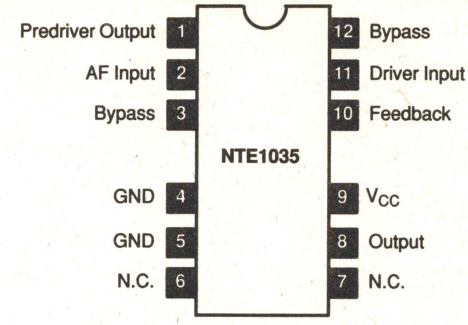

Audio Power Amp, 0.7W, V_{CC} = 10V — **12–Lead DIP, See Diag. 258**

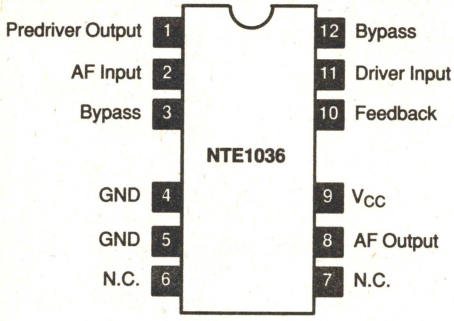

Audio Power Amp, 5.5W, V_{CC} = 18V — **10–Lead SIP, See Diag. 229**

DISCONTINUED

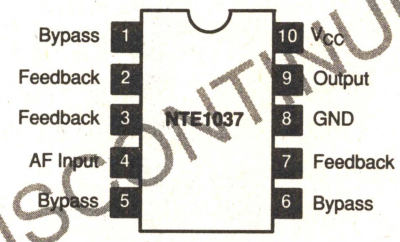

Audio Power Amp, 3.5W, V_{CC} = 18V — **10–Lead SIP, See Diag. 225**

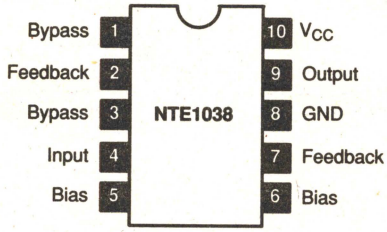

FM/IF Amp, V_{CC} = 20V — **8–Lead DIP, See Diag. 246**

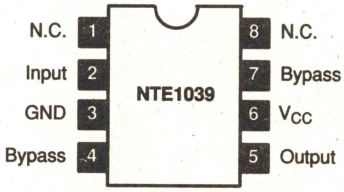

FM/IF Amp, V_{CC} = 20V — **8–Lead SIP, See Diag. 207**

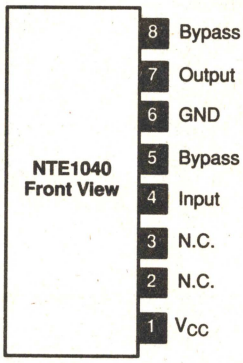

IF Amp, V_{CC} = 16V — **8–Lead DIP, See Diag. 246**

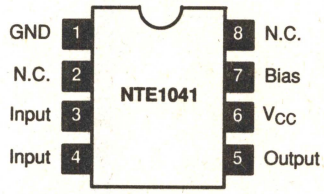

3–Stage FM/IF Amp, V_{CC} = 20V — **8–Lead DIP, See Diag. 246**

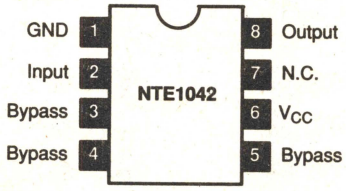

Audio Amp for Tape Recorder, V_{CC} = 12V — **14–Lead DIP, See Diag. 247**

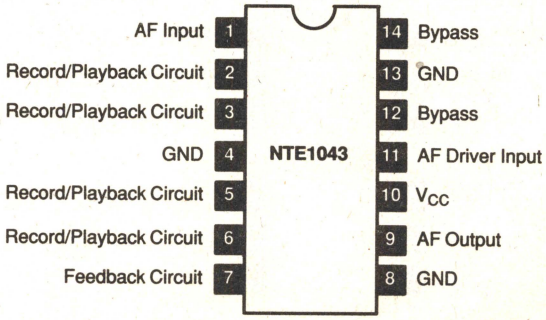

See Diagrams, beginning on Page 1–252

FM, TV Sound, IF Amp, FM Detector, V_{CC} = 13V — **14–Lead DIP, See Diag. 247**

NTE1045

AF Amp Input	1	14	GND
AF Amp Output	2	13	FM Ratio Detector
Voltage Stabilizer	3	12	FM Ratio Detector
Voltage Stabilizer	4	11	N.C.
IF Input	5	10	N.C.
IF Input	6	9	IF Output
GND	7	8	Bypass

TV Tuner AFC, V_{CC} = 20V — **14–Lead DIP, See Diag. 247**

NTE1046

N.C.	1	14	V_{CC}
DC Output	2	13	DC Input
DC Output	3	12	Det Diode
IF Input Hot	4	11	Det Diode
IF Input Cold	5	10	IF Output
Bypass Capacitor	6	9	DC Input
GND	7	8	Regulated

TV Sound, IF/FM, Det/AF Preamp — **14–Lead DIP, See Diag. 247**

NTE1047

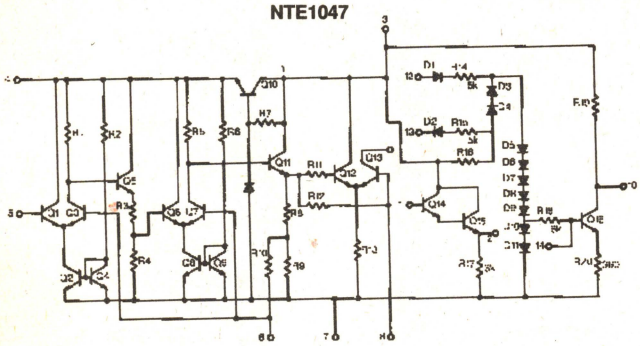

AM Tuner W/RF Amp, V_{CC} = 15V — **16–Lead DIP, See Diag. 249**

NTE1049

Mix Input	1	16	Mixer Bias
Feedback	2	15	Mixer GND
AGC Filter	3	14	Mix Output
RF Output	4	13	GND
(+) B	5	12	RF Input
V_{CC} to AGC Amp	6	11	Amplified AGC
Det Output	7	10	AGC Amp Bias
GND	8	9	IF Input

Color TV Chroma Demod, V_{CC} = 28V — **14–Lead DIP, See Diag. 269**

NTE1050

G–Y Output	1	14	V_{CC}
R–Y Output	2	13	Reference Signal Input
Luminance Input	3	12	Reference Signal Input
B–Y Output	4	11	N.C.
N.C.	5	10	Chroma Input
Blanking Input	6	9	Chroma Input
GND	7	8	Chroma Input

Low Noise Preamp, V_{CC} = 15V — **7–Lead SIP, See Diag. 208**

NTE1052
Front View

7	V_{CC}
6	Output
5	Bias
4	GND
3	Nab
2	Input
1	Bias

AF High Gain Preamp, V_{CC} = 7V — **10–Lead Metal Can, See Diag. 202**

NTE1053
Top View

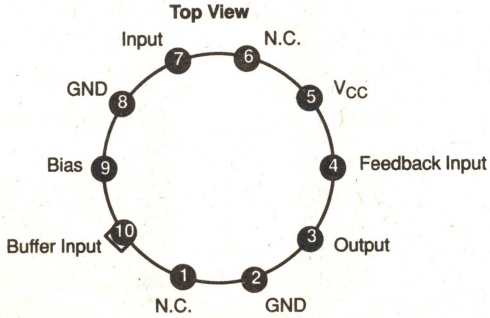

FM/AM IF Amp, V_{CC} = 4V — **14–Lead DIP, See Diag. 247**

NTE1054
NTE1055

1st IF Amp Output	1	14	2nd IF Amp Input
1st IF Amp Input	2	13	Bypass
Bypass	3	12	2nd IF Amp Output
V_{CC}	4	11	3rd IF Amp Input
GND	5	10	3rd IF Amp Output
4th IF Amp Input	6	9	3rd IF Amp Output
4th IF Amp Output	7	8	Output

See Diagrams, beginning on Page 1–252

FM Stereo Multiplex Demod, V_{CC} = 9V — **14–Lead DIP, See Diag. 247**

NTE1056

19kHz Tank	1	14	Amp Input
V_{CC}	2	13	Amp Output
38kHz Tank	3	12	GND
DC Amp/Lamp Driver	4	11	Bias Adjust
38kHz Decoder	5	10	Mono/Stereo Switch
Input	6	9	Decoder Input
Output	7	8	Output

FM IF Amp, AF Preamp, V_{CC} = 12V Typ — **14–Lead DIP, See Diag. 247**

NTE1057

SIF OSC	1	14	GND
SIF OSC	2	13	IF 1
Bypass	3	12	IF 1
Bypass	4	11	IF 2
AF Input	5	10	IF 2
Volume Control	6	9	Audio Output
Feedback	7	8	Bias

Audio Power Amp, 4.4W, V_{CC} = 18V Max — **9–Lead SIP, See Diag. 212**

NTE1058 Front View

9	V_{CC}
8	Ref Output
7	Input
6	GND
5	Compensation
4	Feedback
3	Compensation Filter
2	GND
1	Output

AM–RF Amp Mix/OSC FM–AM IF Amp, V_{CC} = 9.5V Max — **16–Lead DIP, See Diag. 249**

NTE1060

FM IF Input	1	16	Bypass
GND	2	15	OSC
1st FM IF Output	3	14	Mixer Input
V_{CC}	4	13	RF Input
2nd FM IF Input	5	12	Mixer Output
GND	6	11	Final AM IF Amp Input
Bypass	7	10	AGC Bias
Det/2nd FM IF Output	8	9	Final AM IF Output

TV AFT Circuit, V_{CC} = 30V — **14–Lead DIP, See Diag. 247**

NTE1061

N.C.	1	14	V_{CC}
N.C.	2	13	GND
IF Input	3	12	N.C.
Det Input	4	11	IF Det Input
IF Input	5	10	Tertiary Coil
N.C.	6	9	N.C.
DC Output VHF	7	8	DC Output UHF

Color TV Demodulator, V_{CC} = 30V — **14–Lead DIP, See Diag. 247**

NTE1062

Green–Output	1	14	V_{CC}
Red–Output	2	13	B–Y Inj
Luminance Input	3	12	R–Y Inj
Blue–Output	4	11	N.C.
Bias	5	10	Chroma (+)
Blanking	6	9	Chroma (–)
GND	7	8	Chroma (–)

TV Video Signal Processor, V_{CC} = 12V — **16–Lead DIP, See Diag. 248**

NTE1064

V_{CC}	1	16	Sync Output
Beam Current Limiter	2	15	Sync Pulse Amp Input
Beam Current Limiter	3	14	Sync Pulse Amp Output
RF AGC	4	13	1st Video Amp Output
N.C.	5	12	Contrast Control
IF AGC	6	11	Output to ACC
IF AGC Control	7	10	Video Input
IF AGC Control	8	9	GND

FM–AM IF Amp & AF Amp, V_{CC} = 7.5V — **16–Lead DIP, See Diag. 248**

NTE1072

IF Input AM/FM	1	16	IF Amp Circuit
FM Detector Circuit	2	15	AM Detector Circuit
AF Circuit	3	14	AM Detector Circuit
AF Input	4	13	AM IF Amp Circuit
AF Circuit	5	12	Bypass
GND	6	11	Bypass
AF Output	7	10	Bypass
V_{CC}	8	9	FM Detector Circuit

See Diagrams, beginning on Page 1–252

AF–RF Amp, Mix, OSC, FM–AM IF Amp, V_{CC} = 8.2V — **16–Lead DIP, See Diag. 248**

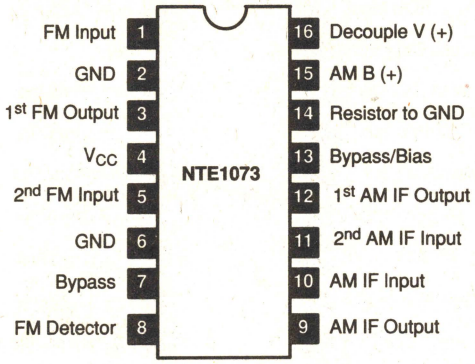

Audio Power Amp, 1W — **14–Lead DIP, See Diag. 269**

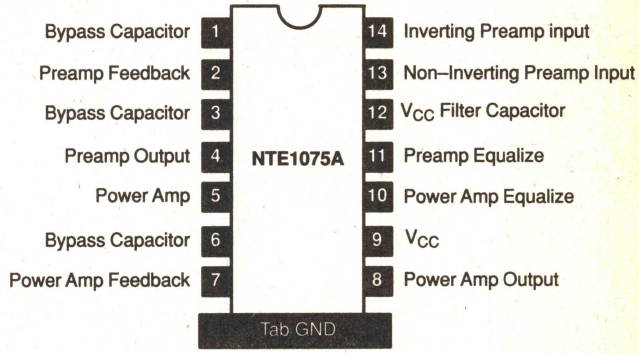

Vertical OSC, Driver — **14–Lead DIP, See Diag. 247**

NTE1079

AT TIME OF PUBLICATION, DATA ON NTE1079, AN ACTIVE NUMBER, WAS NOT AVAILABLE

TV Video Processor, V_{CC} = 12V — **14–Lead DIP, See Diag. 247**

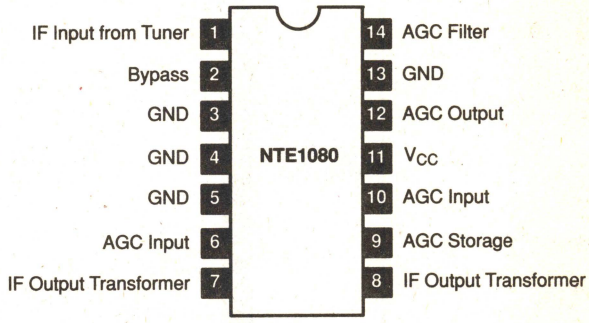

Audio Power Amp, 4.8W, V_{CC} = 20V Max — **10–Lead SIP, See Diag. 235**

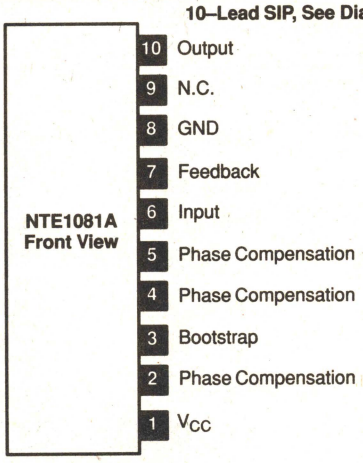

FM–IF Amp, V_{CC} = 15V — **7–Lead SIP, See Diag. 208**

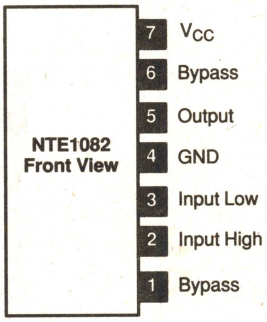

Hybrid, Dual, High Gain Preamp — **16–Lead DIP, See Diag. 241**

NTE1083

AT TIME OF PUBLICATION, DATA ON NTE1083, AN ACTIVE NUMBER, WAS NOT AVAILABLE

Low Noise Audio Preamp, V_{CC} = 42V — **7–Lead SIP, See Diag. 214**

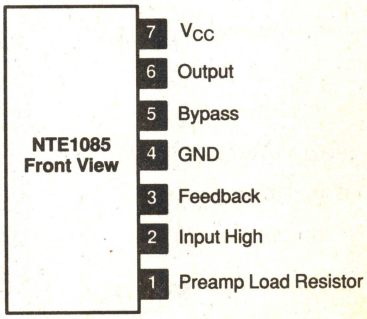

See Diagrams, beginning on Page 1–252

Low Noise Preamp, V_{CC} = 15V — **7–Lead SIP, See Diag. 214**

NTE1087 Front View

7	V_{CC}
6	Output
5	Bypass
4	GND
3	Feedback
2	Input High
1	Preamp Load Resistor

Audio Power Amp, Dual Power Supply Req'd, 25W, V_{CC} = ±33V — **10–Lead SIP, See Diag. 225**

NTE1090 Front View

10	N.C.
9	GND
8	AF Input
7	Feedback
6	N.C.
5	N.C.
4	Feedback
3	V_{CC} (+)
2	AF Output
1	V_{CC} (–)

RF–IF Amp, V_{CC} = 20V — **7–Lead SIP, See Diag. 208**

NTE1092 Front View

7	Input Low
6	GND
5	Input High
4	Tab
3	Bias
2	V_{CC}
1	Output

Color TV Chroma Amp, V_{CC} = 15V — **14–Lead DIP, See Diag. 247**

NTE1094

Burst Amp Input	1	14	1st BPA Input
V_{CC}	2	13	1st BPA Input
Color Contrast	3	12	ACC Adjust
Burst Amp Output	4	11	ACC Detector Input
Gated Pulse Input	5	10	ACC Ref
2nd BPA Output	6	9	Killer Amp Input
GND	7	8	2nd BPA Output

TV Color Processor, V_{CC} = 24V — **20–Lead DIP, See Diag. 254**

NTE1089

ACC Input	1	20	ACC Output
Bypass Capacitor	2	19	V_{CC}
Bypass Capacitor	3	18	Burst Amp Input
Chroma Input	4	17	Burst Amp Output
Bypass Capacitor	5	16	Horiz Sync Pulse Input
1st BPA Output	6	15	3.58MHz Input
2nd BPA Input	7	14	3.58MHz Output
2nd BPA Output	8	13	Phase Detector Input
Bypass Capacitor	9	12	Phase Det Input (3.58MHz)
GND	10	11	Color Killer Level

1st Video Amp, AGC, Color Take–Offs — **16–Lead DIP, See Diag. 249**

NTE1091

Sound Output	1	16	IF Trap
Video Output	2	15	Video Output
RF Input	3	14	V_{CC}
RF Input	4	13	RF Forward AGC
Bypass Capacitor	5	12	RF FET AGC
AGC	6	11	Bypass
Pulse Input	7	10	RF AGC
GND	8	9	VIF AGC

High Gain Audio Amp, 1W, V_{CC} = 12V — **14–Lead DIP, See Diag. 269**

NTE1093

GND	1	14	Input 1
Bypass	2	13	V_{CC}
Bypass	3	12	Input Transistor/Output 2
Output 1	4	11	Input Transistor
Input 2	5	10	Input Transistor
Emitter	6	9	Input Transistor
Collector	7	8	Collector

Tab GND

High Frequency Wide Band Amp/ Phase Detector — **14–Lead DIP, See Diag. 268**

NTE1096

N.C.	1	14	V_{CC}
N.C.	2	13	GND
Detector Input	3	12	N.C.
Output	4	11	IF Input
Detector Input	5	10	IF Input
N.C.	6	9	N.C.
Detector Output	7	8	Detector Output

See Diagrams, beginning on Page 1–252

Audio Power Amp, 1W, V_{CC} = 15V — **14–Lead DIP, See Diag. 498**

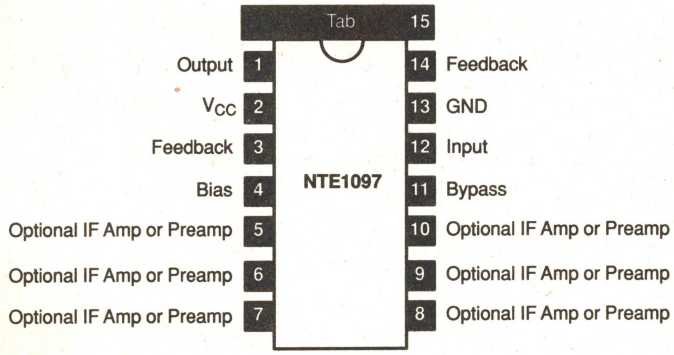

Audio Power Amp, 5W, V_{CC} = 16V — **10–Lead TO3 Type , See Diag. 198**

NTE1098
Bottom View

Pin 1. GND
2. Input
3. Feedback
4. Inverting Input
5. Decouple Filter Cap
6. Equalization
7. Output
8. Feedback
9. –
10. V_{CC}

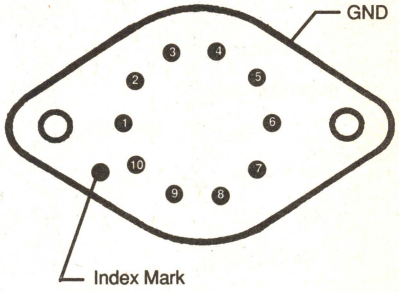

Chroma Demod, V_{CC} = 28V — **14–Lead DIP, See Diag. 247**

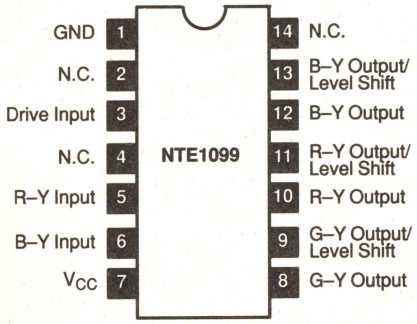

TV Sound IF Amp, FM IF Amp, V_{CC} = 15V — **7–Lead SIP, See Diag. 214**

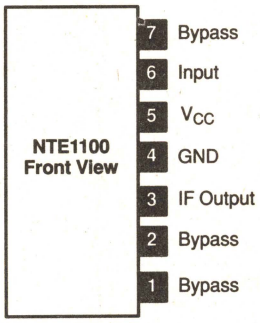

General Purpose Amp, Mixer, OSC, V_{CC} = 30V — **7–Lead SIP, See Diag. 214**

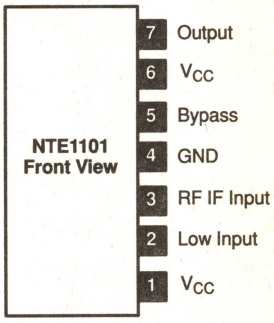

3–Stage Audio Amp, V_{CC} = 15V — **5–Lead SIP, See Diag. 203**

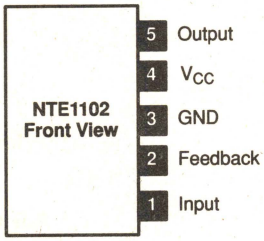

General Purpose, Low Noise, Preamp, V_{CC} = 15V — **7–Lead SIP, See Diag. 214**

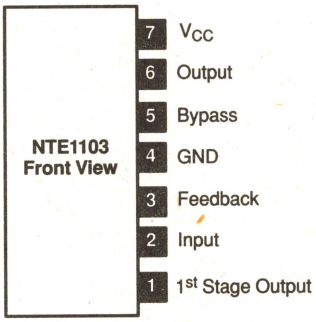

Wide and Narrow Band Amp, FM/IF Limiter, V_{CC} = 15V — **5–Lead SIP, See Diag. 203**

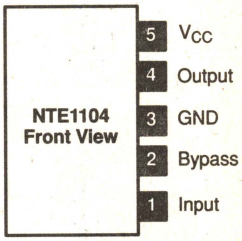

FM Stereo Demod — **16–Lead DIP, See Diag. 249**

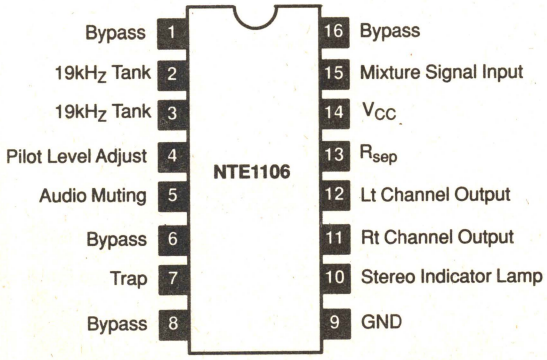

Audio Power Amp, 4.8W — **14–Lead DIP, See Diag. 259**

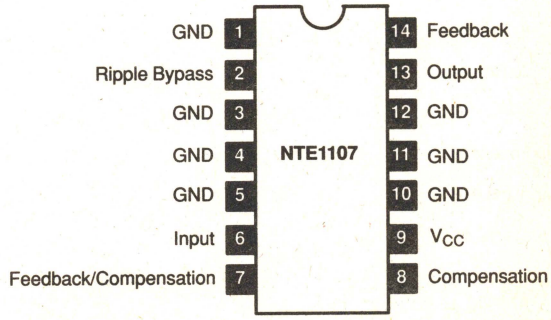

See Diagrams, beginning on Page 1–252

AM/FM IF Amp/Det/AF/Amp — **14–Lead DIP, See Diag. 247**

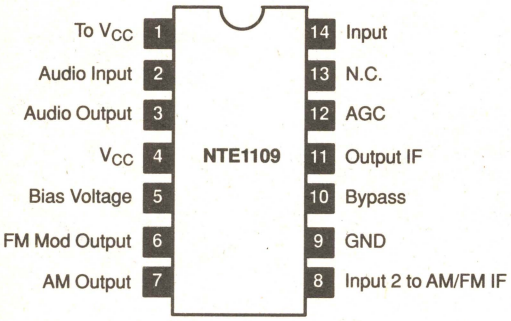

Audio Power Amp, 2W, V_{CC} = 12V — **16–Lead DIP, See Diag. 265**

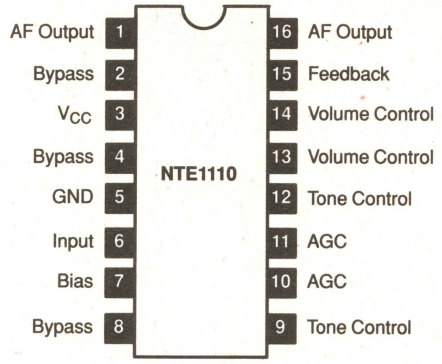

Audio Amp, 4W @ 24V, 2.2W @ 18V — **14–Lead DIP, See Diag. 247**

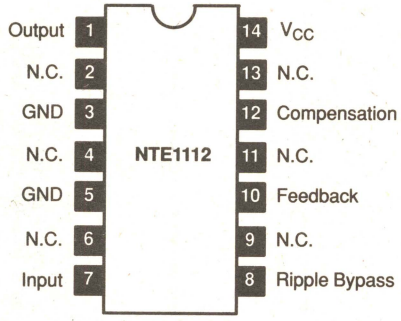

Audio Power Amp,7W, w/Heat Sink Tabs V_{CC} = 20V — **12–Lead DIP, See Diag. 262**

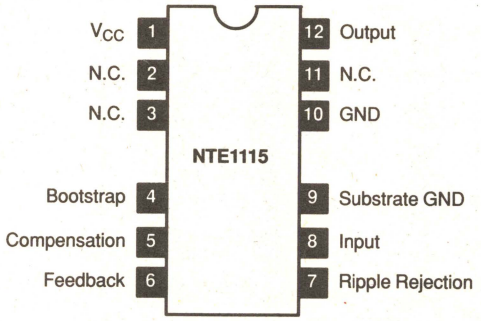

Audio Power Amp, 7W, w/Heat Sink Tabs, V_{CC} = 20V — **12–Lead DIP, See Diag. 261**

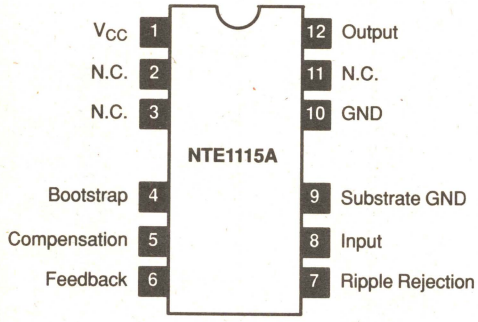

Audio Power Amp,5W, w/Heat Sink Tabs, V_{CC} = 30V — **12–Lead DIP, See Diag. 261**

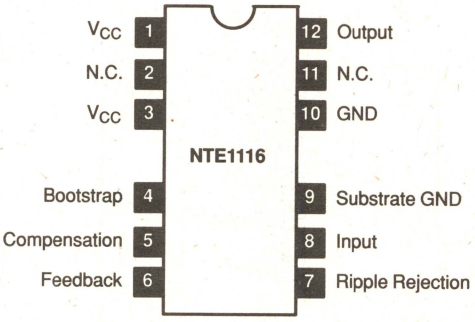

Audio Power Amp, 2W, V_{CC} = 16V Max — **14–Lead DIP, See Diag. 247**

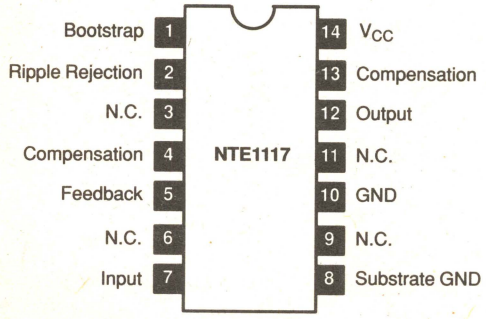

Hybrid, 2–Stage Audio Amp — **7–Lead SIP, See Diag. 218**

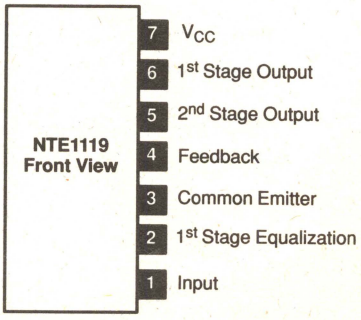

See Diagrams, beginning on Page 1–252

Hybrid, Audio Driver — **7–Lead SIP, See Diag. 218**

NTE1120

AT TIME OF PUBLICATION, DATA ON NTE1120, AN ACTIVE NUMBER, WAS NOT AVAILABLE

Color TV Subcarrier Regenerator, V_{CC} = 15V — **16–Lead DIP, See Diag. 248**

NTE1121

Bias Output	1	16	Reference Output
(–) 45° CW	2	15	Tint Control
(+) 45° CW	3	14	3.58MHz OSC
V_{CC}	4	13	APC Filter
Gate Pulse Amp Bypass	5	12	APC Filter
Gate Pulse Input	6	11	ACC Filter and Adjust
Killer Voltage Output	7	10	ACC Filter and Adjust
GND	8	9	Burst Signal Input

Color TV Chroma Demod, V_{CC} = 28V — **14–Lead DIP, See Diag. 247**

NTE1122

V_{CC}	1	14	N.C.
R–Y Output	2	13	N.C.
G–Y Output	3	12	Color Demod Input (R–Y) Ref
B–Y Output	4	11	Color Demod Input (R–Y) Ref
Color Demod Input (B–Y) Ref	5	10	Color Demod Bypass
N.C.	6	9	Color Demod Input
GND	7	8	N.C.

Color TV Subcarrier Processing Circuit, V_{CC} = 12V — **16–Lead DIP, See Diag. 248**

NTE1123

V_{CC}	1	16	Color OSC X'tal
Phase Detector Cap	2	15	Color OSC X'tal
Phase Detector Ref	3	14	Color Carrier Output
Color Correction Ref	4	13	Color OSC X'tal
GND	5	12	OSC Control Voltage Bypass
Burst Input	6	11	OSC Control Voltage Bypass
Auto Color Control Ret	7	10	Horizontal Retrace Input
Auto Color Control	8	9	Auto Color Detector Cap

AM/FM IF Amp, V_{CC} = 12V — **16–Lead DIP, See Diag. 249**

NTE1124

Output	1	16	V_{CC}
N.C.	2	15	FM Input
N.C.	3	14	N.C.
GND	4	13	FM Output
Input	5	12	GND
AGC Output	6	11	N.C.
AGC Input	7	10	AF Input
B (+)	8	9	AF Output

Audio Power Amp, 1W, V_{CC} = 15V Max — **14–Lead DIP, See Diag. 498**

NTE1126

		15	Tab/Heat Sink (GND)
Output	1	14	Bypass
V_{CC}	2	13	GND
Driver Input	3	12	Input
Feedback	4	11	Voltage Stabilizer
Voltage Stabilizer	5	10	N.C.
N.C.	6	9	N.C.
N.C.	7	8	N.C.

Audio Power Amp, 4.8W — **10–Lead SIP, See Diag. 235**

NTE1127 Front View

10	Output
9	N.C.
8	GND
7	Input
6	AF Input
5	Bypass
4	Bypass
3	Bootstrap
2	Bypass
1	V_{CC}

TV Video IF Amp, V_{CC} = 12V Typ — **7–Lead SIP, See Diag. 214**

NTE1128 Front View

7	IF Output
6	IF Output
5	V_{CC}
4	GND
3	IF AGC Gain Control Voltage
2	IF Input
1	IF Input

See Diagrams, beginning on Page 1–252

Color TV Demod, V_{CC} = 18V Max — **16–Lead DIP, See Diag. 249**

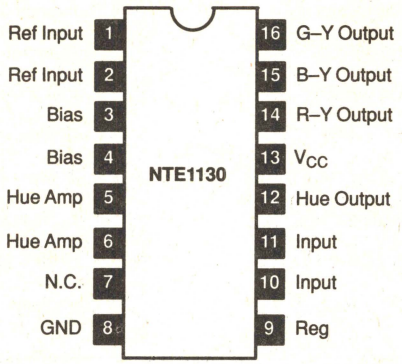

TV Video IF System, V_{CC} = 15V — **16–Lead DIP, See Diag. 249**

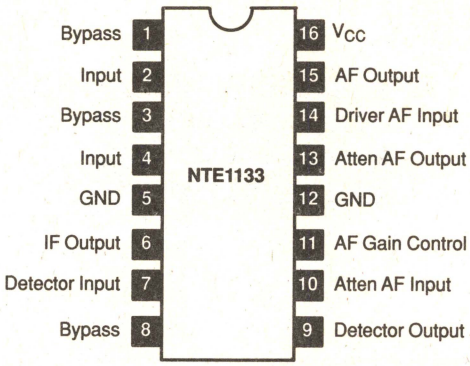

Video Signal Processor, V_{CC} = 12V Typ — **16–Lead DIP, See Diag. 249**

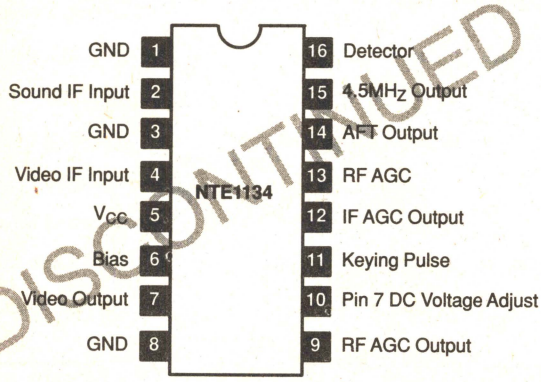

DISCONTINUED

High Gain Audio Preamp, V_{CC} = 20V — **7–Lead SIP, See Diag. 217**

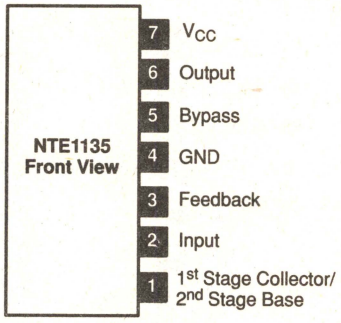

Audio Power Amp, 1.3W, V_{CC} = 10V — **10–Lead Metal Can, See Diag. 202**

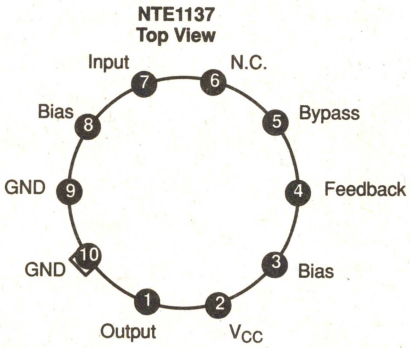

Hybrid, Audio Power Amp, 13W Min — **10–Lead SIP, See Diag. 226**

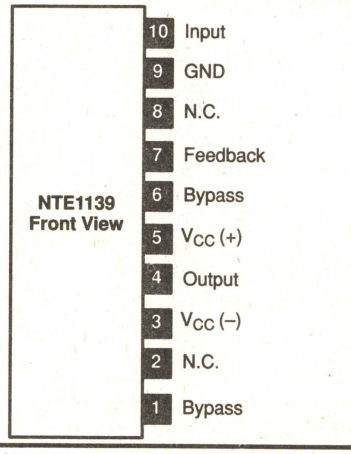

Audio Power Amp, 2W, V_{CC} = 15V — **8–Lead DIP, See Diag. 264**

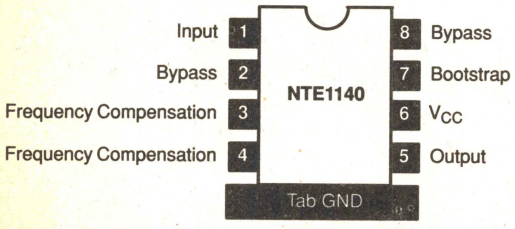

Audio Power Amp, 1.5W, V_{CC} = 20V Max — **8–Lead DIP, See Diag. 264**

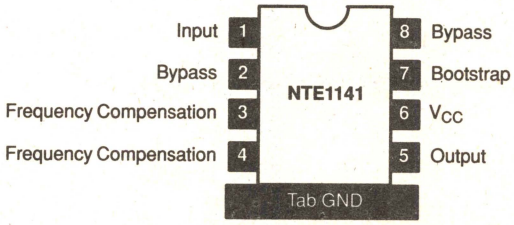

See Diagrams, beginning on Page 1–252

FM Multiplex Stereo Decoder — **14–Lead DIP, See Diag. 247**

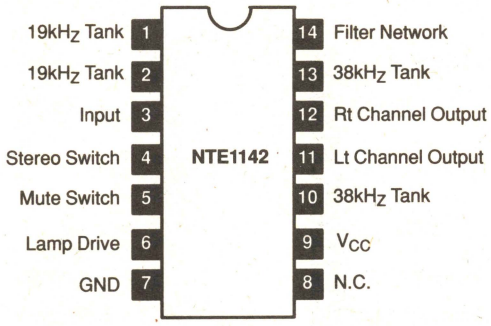

FM Tuning System, V_{CC} = 15V — **14–Lead DIP, See Diag. 250**

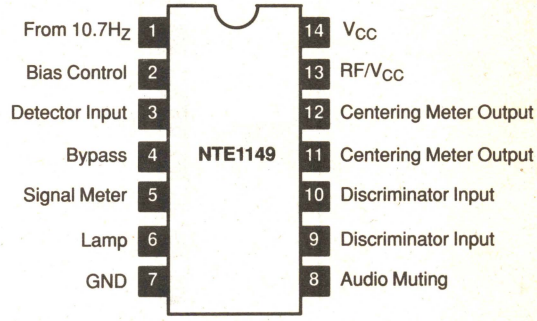

Audio Module — **10–Lead DIP, See Diag.**

NTE1151

AT TIME OF PUBLICATION, DATA ON NTE1151, AN ACTIVE NUMBER, WAS NOT AVAILABLE

Hybrid, AF Preamp — **13–Lead Staggered SIP, See Diag. 211**

NTE1152

AT TIME OF PUBLICATION, DATA ON NTE1152, AN ACTIVE NUMBER, WAS NOT AVAILABLE

Audio Power Amp, 2W/Ch, V_{CC} = 20V — **14–Lead DIP, See Diag. 260**

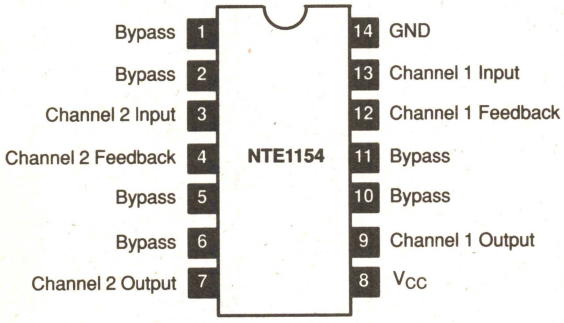

Audio Power Amp, 5.8W, V_{CC} = 18V — **10–Lead SIP, See Diag. 239**

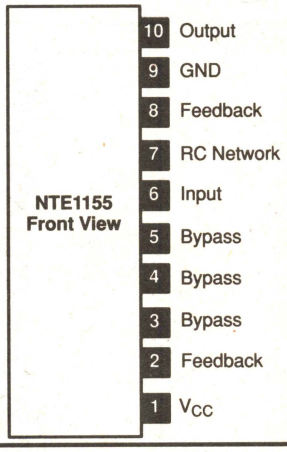

Audio Power Amp, 2W, V_{CC} = 12V — **16–Lead DIP, See Diag. 265**

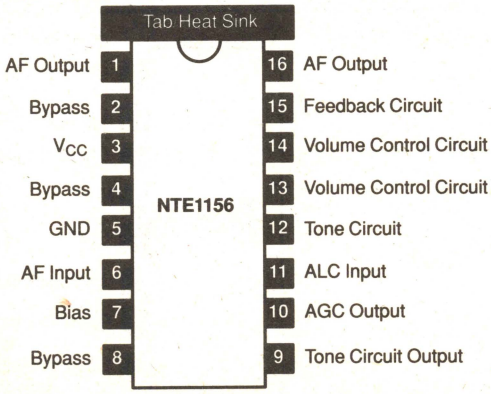

Chroma Processor — **16–Lead DIP, See Diag. 248**

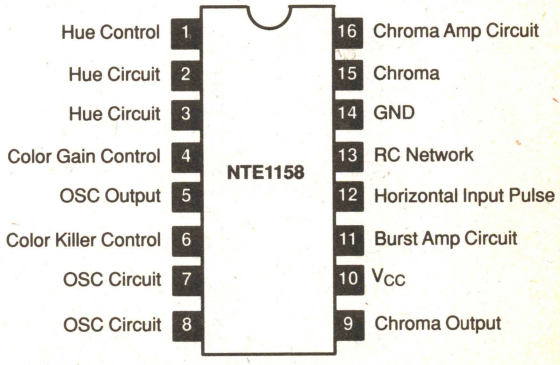

See Diagrams, beginning on Page 1–252

Audio Power Amp, 5.2W, V_{CC} = 20V Max — **10–Lead SIP, See Diag. 235**

NTE1160 Front View

10	Output
9	N.C.
8	GND
7	Feedback
6	Input
5	Bypass
4	Bypass
3	Bypass
2	N.C.
1	V_{CC}

TV Video, Sound IF, V_{CC} = 12V — **28–Lead DIP, See Diag. 253**

NTE1161

Bypass Capacitor	1	28	Pix IF tank Circuit
IF Input	2	27	Pix IF Tank Circuit
N.C.	3	26	V_{CC}
GND	4	25	N.C.
SIF Output	5	24	Test Point
Bandpass Filter	6	23	AFT Carrier Output
Bandpass Filter	7	22	Sync Positive Video Output
V_{CC}	8	21	Sync Negative Video Output
GND	9	20	Tone Control Network
Sound IF Input	10	19	To Audio Output
DC Bias Feedback	11	18	Audio Preamp Input
Quadrature Coil	12	17	DC Volume Control
Quadrature Coil	13	16	DC Volume Control
N.C.	14	15	Det Output

Video Jungle Circuit, V_{CC} = 12V — **16–Lead DIP, See Diag. 248**

NTE1164

Video Input (Sync Pos)	1	16	V_{CC}
GND	2	15	Contrast Control
Sync Output	3	14	Video Input (Sync Neg)
Video Input (Sync Pos)	4	13	N.C.
Deflect Pulse Input	5	12	N.C.
Blank Pulse Output	6	11	N.C.
Brightness Control	7	10	N.C.
Couple (From Pin 9)	8	9	Couple (To Pin 8)

Audio Power Amp, 4.5W, V_{CC} = 18V Max — **10–Lead SIP, See Diag. 240**

NTE1165 Front View

10	V_{CC}
9	Feedback
8	Bypass
7	Bypass
6	NFB
5	Input
4	Bypass
3	Bypass
2	GND
1	Output

Hybrid, Audio Output, 5.8W, V_{CC} = 18V Max — **10–Lead SIP, See Diag. 240**

NTE1166 Front View

10	V_{CC}
9	Feedback
8	Bypass
7	Bypass
6	NFB
5	Input
4	Bypass
3	Bypass
2	GND
1	Output

Phase Locked Loop (PLL) — **16–Lead DIP, See Diag. 248**

NTE1167

V_{DD}	1	16	GND
P_{IN}	2	15	P_0
R_{IN}	3	14	P_1
N.C.	4	13	P_2
D_O	5	12	P_3
L_D	6	11	P_4
P_8	7	10	P_5
P_7	8	9	P_6

Dual Preamp, V_{CC} = 18V — **8–Lead SIP, See Diag. 219**

NTE1170 Front View

8	Channel 1 Input
7	Channel 1 Equalize
6	Channel 1 Output
5	V_{CC}
4	GND
3	Channel 2 Output
2	Channel 2 Equalize
1	Channel 2 Input

See Diagrams, beginning on Page 1–252

OP Amp, V_{CC} = ±18V — **8–Lead Metal Can, See Diag. 200**

NTE1171
Top View

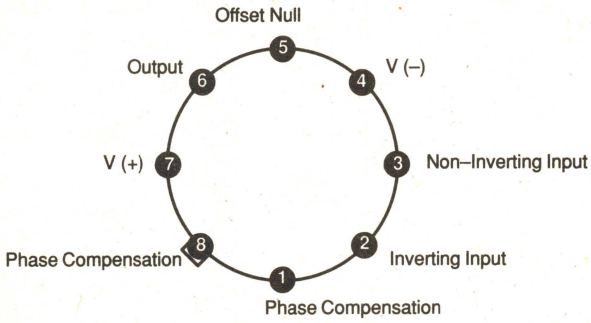

Phase–Frequency Detector, V_{CC} = 7V — **14–Lead DIP, See Diag. 247**

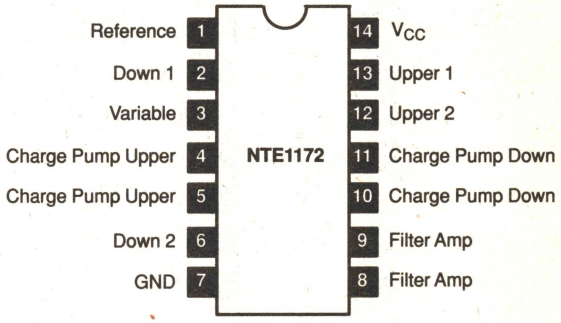

TV AFT Circuit — **14–Lead Staggered DIP, See Diag. 251**

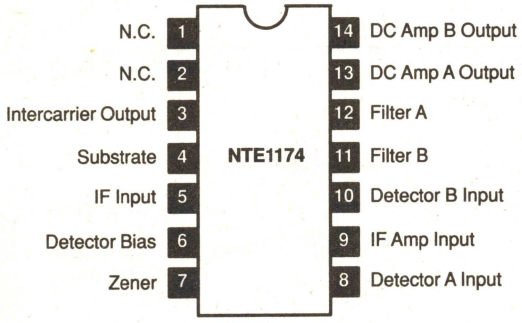

TV Chroma Demod — **16–Lead DIP, See Diag. 248**

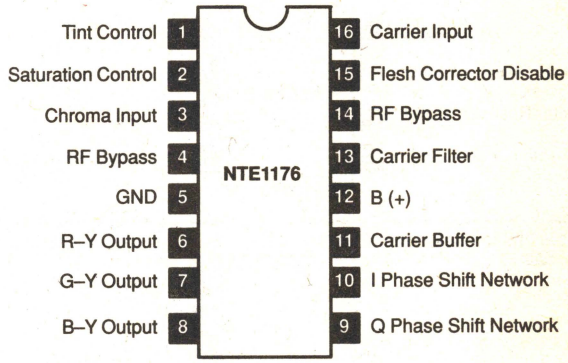

TV Luminance Processor — **14–Lead DIP, See Diag. 247**

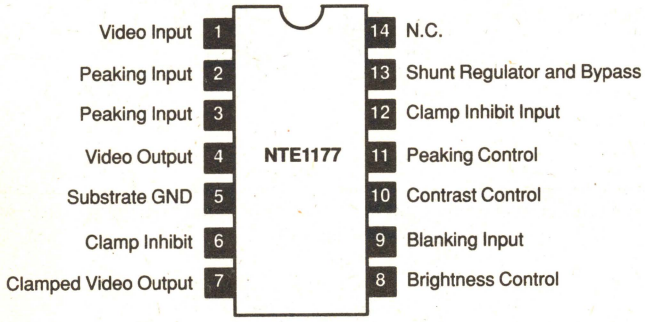

Preamp, W/ALC Transistors, V_{CC} = 9.5V — **8–Lead DIP, See Diag. 246**

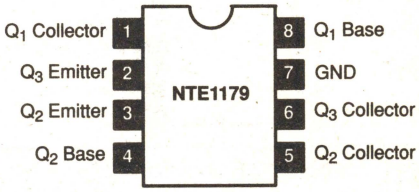

Audio Power Amp, V_{CC} = 9V — **14–Lead DIP, See Diag. 271**

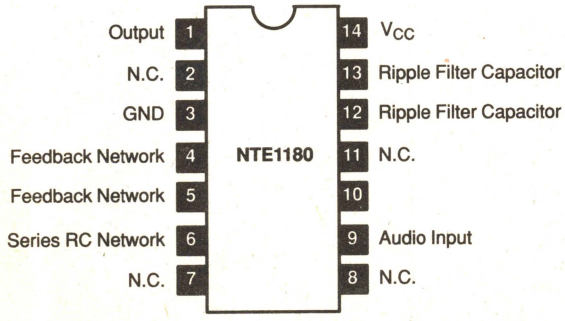

FM Stereo Multiplex Demod — **16–Lead DIP, See Diag. 248**

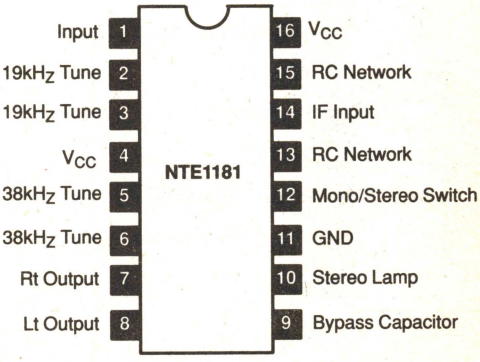

See Diagrams, beginning on Page 1–252

Preamp for Tape Recorder, V_{CC} = 16V — **16–Lead DIP, See Diag. 248**

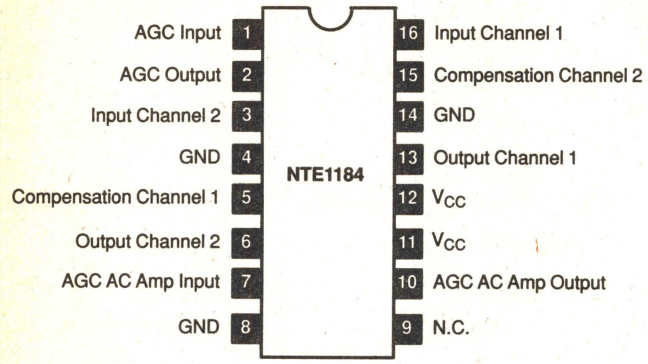

Audio Preamp, 3.5W, V_{CC} = 27V — **10–Lead SIP, See Diag. 235**

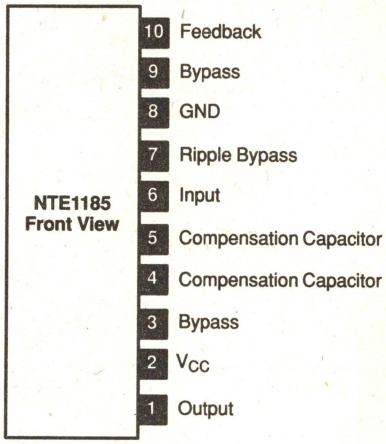

TV Video IF Detector, V_{CC} = 12V — **8–Lead DIP, See Diag. 246**

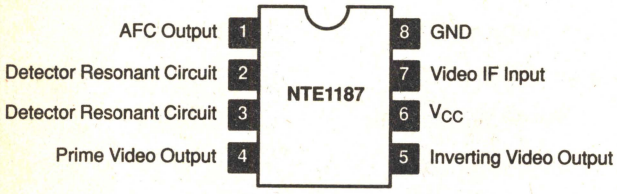

TV Sound IF Amp — **10–Lead Metal Can, See Diag. 206**

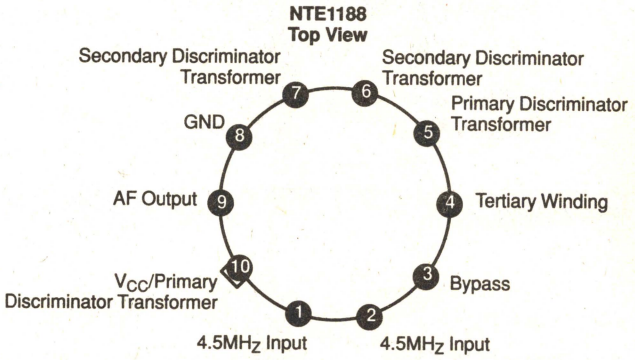

VCO for Phase Lock Loop (PLL), V_{CC} = 10V — **9–Lead SIP, See Diag. 213**

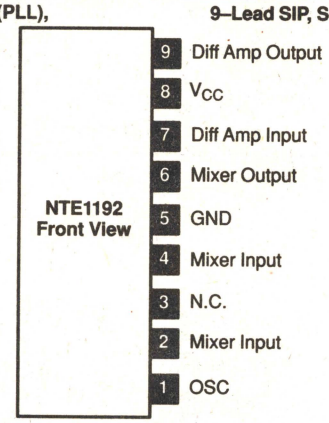

Audio Power Amp, 5.8W, V_{CC} = 17V Typ — **10–Lead SIP, See Diag. 238**

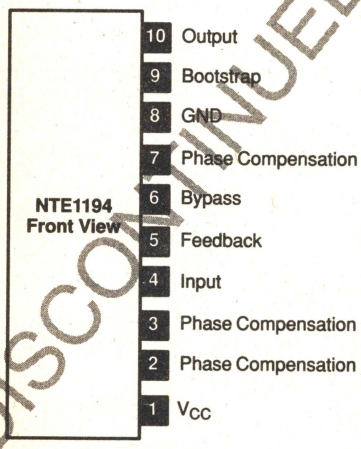

DISCONTINUED

Low Noise, High Gain Preamp, V_{CC} = 15V — **7–Lead SIP, See Diag. 208**

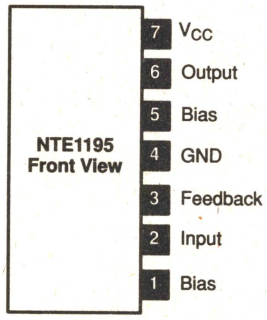

OSC and 12–Stage Divider, V_{DD} = 10V — **9–Lead SIP, See Diag. 213**

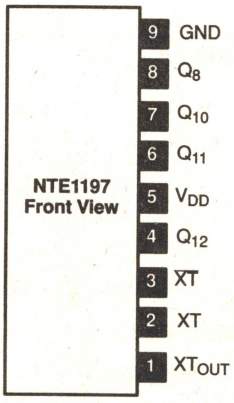

See Diagrams, beginning on Page 1–252

CMOS, Frequency Divider — **24–Lead DIP, See Diag. 252**

NTE1198

IS	1	24	ØP
CO	2	23	GND
AI	3	22	P_{10}
AO	4	21	P_9
ØD	5	20	P_8
D_{OUT}	6	19	P_7
M	7	18	P_6
D5M	8	17	P_5
OSC1	9	16	P_4
OSC2	10	15	P_3
PI	11	14	P_2
V_{DD}	12	13	P_1

CMOS, Frequency Divider — **24–Lead DIP, See Diag. 252**

NTE1199

P_1	1	24	D_6
P_2	2	23	GND
P_3	3	22	D_7
P_4	4	21	D_8
P_5	5	20	M
P_6	6	19	DO
P_7	7	18	DI
P_8	8	17	$S\overline{O}$
P_9	9	16	SI
P_{10}	10	15	C
P_{11}	11	14	PI
V_{DD}	12	13	$P\overline{O}$

Color TV Chroma Processor, V_{CC} = 13.2V — **16–Lead DIP, See Diag. 249**

NTE1200

1st Chroma Amp	1	16	Manual Cont
Signal Hold	2	15	Attenuator
Bias Hold	3	14	Attenuator
AFPC Detector	4	13	Overload Detector
GND	5	12	V_{DD}
Phase Shift	6	11	Signal Hold
Amp Limiter	7	10	Bias Hold
Output	8	9	Key

Hybrid, CB VCO — **10–Lead SIP, See Diag. 221**

NTE1201

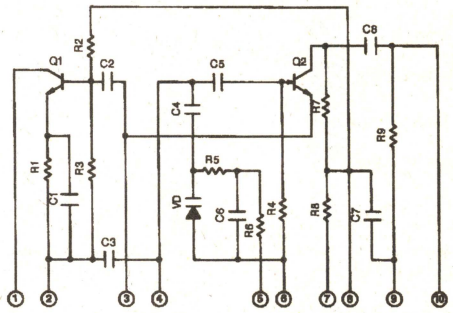

Hybrid, CB VCO — **10–Lead SIP, See Diag. 221**

NTE1202

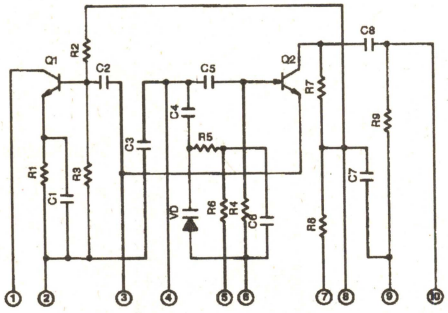

Hybrid, CB VCO — **10–Lead SIP, See Diag. 221**

NTE1203

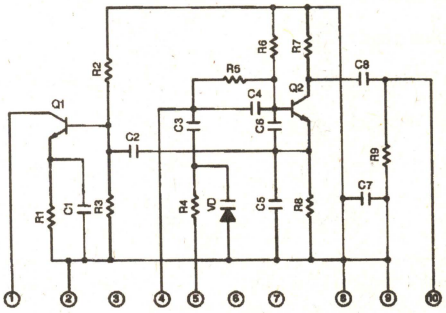

PLL (Phase Lock Loop) Stereo Decoder, V_{CC} = 16V — **14–Lead DIP, See Diag. 250**

NTE1206

V_{CC}	1	14	OSC Tuning
Input	2	13	Filter Network
Amp Output	3	12	Filter Network
Lt Output	4	11	Phase Detector Input
Rt Output	5	10	19kHz Output
Pilot Lamp	6	9	Filter Network
GND	7	8	Filter Network

4–Bit Binary Counter — **8–Lead DIP, See Diag. 246**

NTE1209

Count Input	1	8	A (1)
GND	2	7	D (8)
V_{CC}	3	6	B (2)
Reset	4	5	C (4)

See Diagrams, beginning on Page 1–252

Preamp w/ALC, V_{CC} = 15V — **9–Lead SIP, See Diag. 223**

NTE1210 Front View

9	V_{CC}
8	Output
7	Feedback
6	Input
5	GND
4	Gain Control
3	ALC Feedback
2	Feedback
1	V_{CC}

Audio Power Amp, 5.5W, V_{CC} = 13.2V — **10–Lead SIP, See Diag. 237**

NTE1211 Front View

10	Input
9	Equalization
8	Filter Cap
7	N.C.
6	Equalization
5	Equalization
4	Feedback
3	V_{CC}
2	Output
1	GND

TV Video IF Amp, V_{CC} = 15V — **14–Lead DIP, See Diag. 250**

NTE1213

2nd Video IF Input	1	14	2nd Video IF Input
V_{CC}	2	13	1st Video IF Amp
2nd Video IF Output	3	12	1st Video IF Amp
2nd Video IF Output	4	11	Forward AGC Output
IF AGC Amp	5	10	Reverse AGC Output
IF AGC Amp	6	9	Delay Adjust
GND	7	8	IF AGC Input

AM Tuner System, V_{CC} = 16V — **16–Lead DIP, See Diag. 248**

NTE1214

RF Amp DC Bypass	1	16	RF Amp DC Bypass
RF Tune	2	15	Tune Meter Output
Converter V_{CC}	3	14	AGC Bypass
RF Amp Output	4	13	3rd IF Amp Input Tune
Converter Output	5	12	Detector Output
OSC Tank Circuit	6	11	IF System V_{CC}
Converter Input	7	10	DC Return (Substrate)
3rd IF Amp Input	8	9	2nd IF Amp Output

Stereo Equalizer Amp, V_{CC} = 15V — **16–Lead DIP, See Diag. 248**

NTE1215

Decouple Filter Capacitor	1	16	Decouple Filter Capacitor
Input Base 2	2	15	Input Base 1
Input Emitter Bypass 2	3	14	Input Emitter Bypass 1
GND 2	4	13	GND 1
Output Emitter Bypass 2	5	12	Output Emitter Bypass 1
Output 2	6	11	Output 1
Output Collector 2	7	10	Input Collector 1
V_{CC} Channel 2	8	9	V_{CC} Channel 1

Chroma Circuit for NTSB, V_{CC} = 22V — **16–Lead DIP, See Diag. 248**

NTE1216

ACC Capacitor	1	16	B–Y Output
Chroma Input	2	15	G–Y Output
ACC Det Time Constant	3	14	R–Y Output
Pulse Input	4	13	V_{CC}
Chroma Level Cont	5	12	Phase Shift Capacitor
Tint Cont	6	11	GND
V_{CC}	7	10	OSC Time Constant
X'tal	8	9	Killer Det Time Constant

PLL (Phase Lock Loop) FM Multiplex, Stereo Demod, V_{CC} = 18V Max — **14–Lead DIP, See Diag. 248**

NTE1217

V_{CC}	1	16	OSC Network
Composite Signal Input	2	15	Loop Filter
Amp Output	3	14	Loop Filter
Output	4	13	Loop filter
Output	5	12	N.C.
Lamp Drive	6	11	Pilot Presence Loop Filter
GND	7	10	Pilot Presence Loop Filter
Variable Resistor	8	9	N.C.

Audio Power Amp, Dual, 7W/Ch, V_{CC} = 39V Max — **15–Lead SIP, See Diag. 228**

NTE1218 Front View

15	Input Rt Channel
14	Feedback
13	GND
12	GND
11	Output Rt Channel
10	Feedback
9	V_{CC}
8	GND
7	V_{CC}
6	Feedback
5	Output Lt Channel
4	GND
3	GND
2	Feedback
1	Input Lt Channel

See Diagrams, beginning on Page 1–252

Audio Power Amp, Dual, 15W/Ch, V_{CC} = 56V Max — **15–Lead SIP, See Diag. 227**

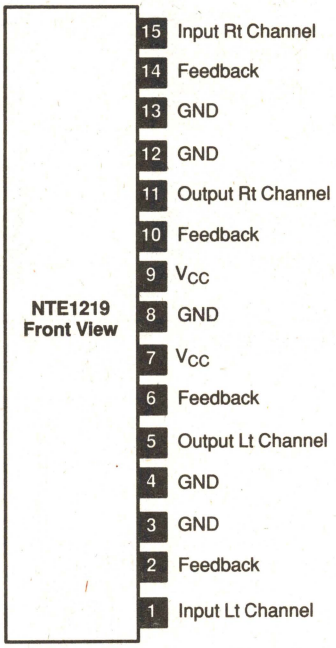

Stereo Preamp, V_{CC} = 25V Max — **14–Lead DIP, See Diag. 247**

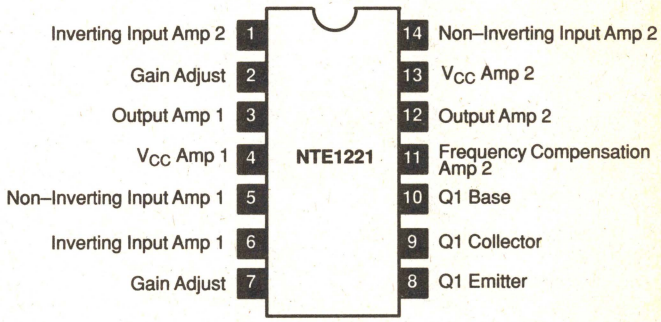

Low Noise Preamp, V_{CC} = 20V Max — **7–Lead SIP, See Diag. 215**

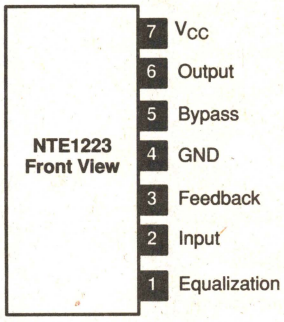

Audio Power Amp, 1.2W, V_{CC} = 16V Max — **10–Lead Metal Can, See Diag. 202**

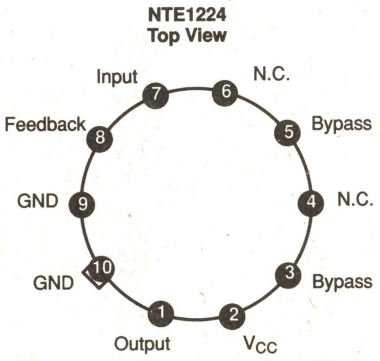

FM Multiplex Stereo Demod — **14–Lead DIP, See Diag. 247**

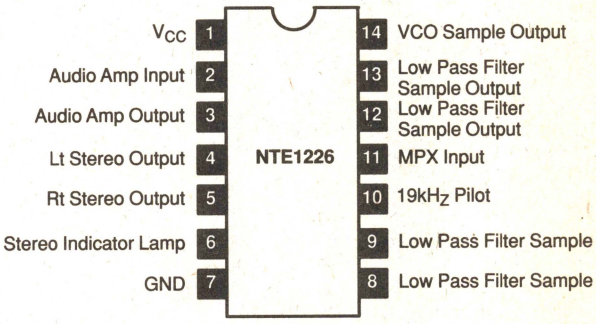

FM IF Amp, V_{CC} = 20V — **8–Lead DIP, See Diag. 246**

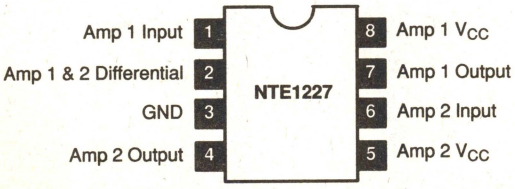

Audio Power Amp, 2.1W, V_{CC} = 13V — **14–Lead DIP, See Diag. 271**

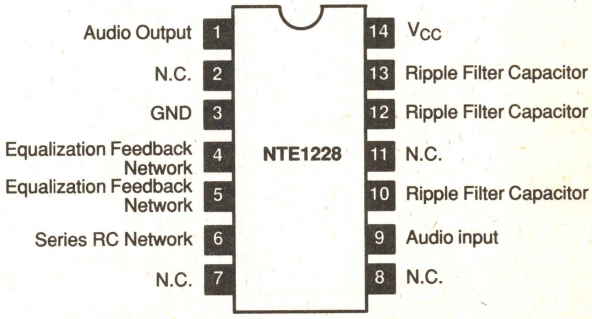

See Diagrams, beginning on Page 1–252

FM Multiplex Stereo Demod — **16–Lead DIP, See Diag. 248**

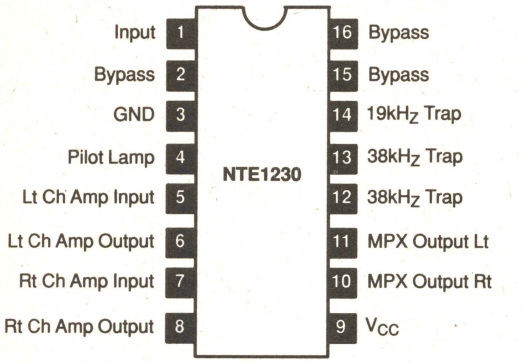

Complete TV Sound Channel, V_{CC} = 28V Max — **12–Lead DIP, See Diag. 261**

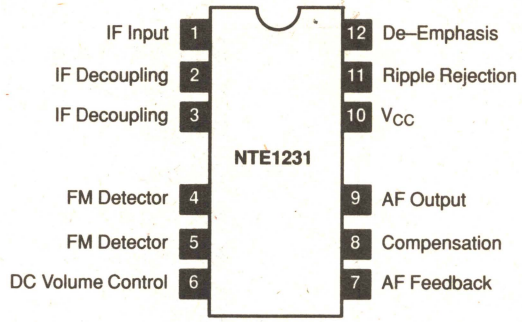

Complete TV Sound Channel, V_{CC} = 28V Max — **16–Lead DIP, See Diag. 248**

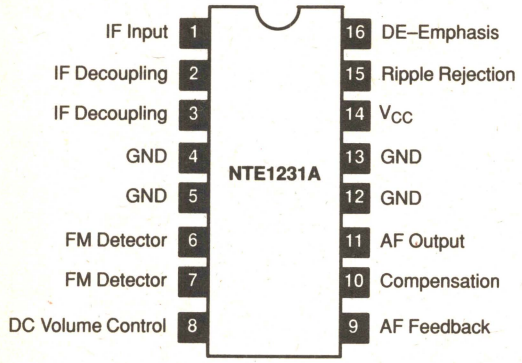

Audio Power Amp, 8W, V_{CC} = 40V — **5–Lead TO220, See Diag. 205**

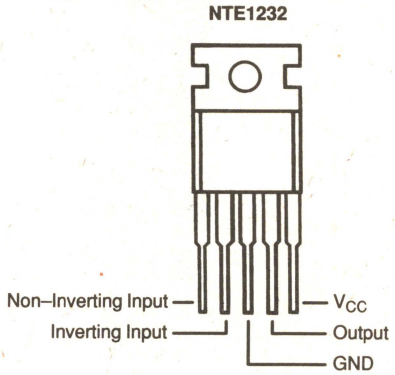

CB PLL (Phase Lock Loop) Frequency Synthesizer — **16–Lead DIP, See Diag. 248**

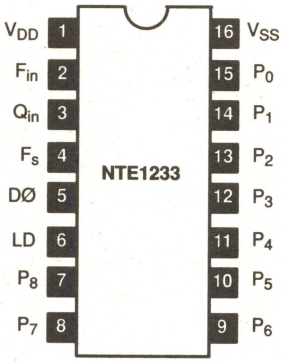

FM IF Amp, V_{CC} = 15V — **7–Lead SIP, See Diag. 214**

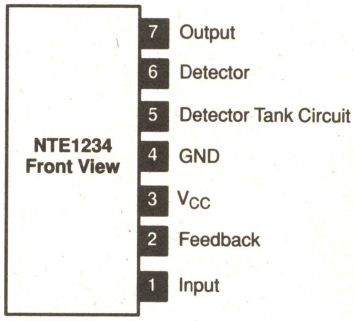

Squelch Amp — **7–Lead SIP, See Diag. 214**

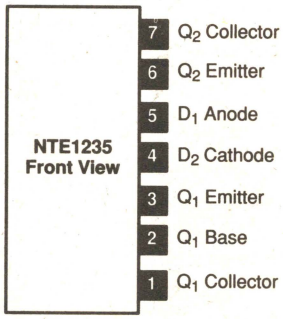

TV Sound IF System, V_{CC} = 30V — **14–Lead DIP, See Diag. 247**

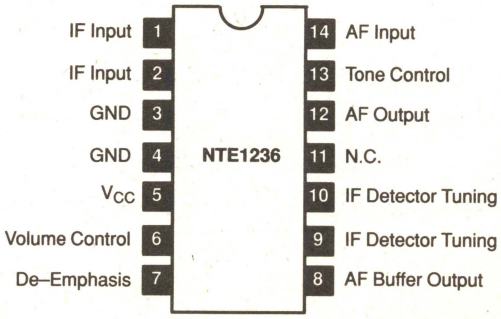

See Diagrams, beginning on Page 1–252

AM Radio w/o Audio Stage, V_{CC} = 18V — **14–Lead DIP, See Diag. 250**

NTE1237

Input	1	14	Tuning Meter
V_{CC} RF/OSC	2	13	AGC Amp Input
V_{CC} RF	3	12	Detector Input
Converter Output	4	11	Audio Output
OSC Tank	5	10	V_{CC} IF/Audio
Converter Input	6	9	GND
IF Input	7	8	IF Output

Audio Output, V_{CC} = 18V — **10–Lead SIP, See Diag. 243**

NTE1239 Front View

10	Output
9	GND
8	Feedback
7	Bypass
6	Bypass
5	Input
4	Compensation
3	Compensation
2	Bypass
1	V_{CC}

Audio Power Amp, 5.5W, V_{CC} = 13.2V — **11–Lead SIP, See Diag. 222**

NTE1240 Front View

11	V_{CC}
10	Equalization
9	Input
8	Bypass
7	GND
6	Feedback
5	Feedback
4	Bypass
3	Bypass
2	GND
1	Output

Head Coil/Meter Driver, V_{CC} = 15V — **7–Lead SIP, See Diag. 217**

NTE1241 Front View

7	V_{CC}
6	Meter Output
5	Meter Input
4	GND
3	Gain Adjust
2	Head Input
1	Head Output

FM/AM IF Amp, AM Converter, V_{CC} = 9.6V Max — **16–Lead DIP, See Diag. 248**

NTE1242

FM IF Output	1	16	Bypass
GND	2	15	OSC Feedback
1st IF Output	3	14	OSC Tank
V_{CC}	4	13	AM Input (Converter)
2nd IF Input	5	12	Converter Output
GND	6	11	2nd IF (AM) Input
Bypass	7	10	AGC Bypass
2nd IF Output	8	9	2nd IF (AM) Output

FM Multiplex Stereo Decoder, V_{CC} = 16V — **14–Lead DIP, See Diag. 250**

NTE1243

45° Phase Shift Capacitor	1	14	V_{CC}
Stereo Switch Time Constant	2	13	Input
19kHz Tank	3	12	Separation Resistance
19kHz/38kHz Tank Return	4	11	Separation Resistance Return
38kHz Tank	5	10	Lt Signal Output
38kHz Tank	6	9	Rt Signal Output
GND	7	8	Lamp

Vertical Deflection for B/W and Small Color TV, V_{CC} = 20V — **10–Lead SIP, See Diag. 235**

NTE1245 Front View

10	Clamp/Blank/Output
9	Yoke Output
8	GND
7	Vertical Line Control
6	OSC Frequency Control
5	Sync Input
4	OSC Output
3	Yoke Feedback
2	V_{CC}
1	To Yoke

TV Sound IF, Audio Output, 2.4W, V_{CC} = 12V — **14–Lead DIP, See Diag. 269**

NTE1246

FM Detector	1	14	Volume Control
FM Detector	2	13	SIF Input Cold
De–Emphasis	3	12	SIF Input Hot
SIF Detector Output	4	11	Feedback
SIF Supply Voltage	5	10	V_{CC}
Decouple	6	9	Bootstrap
Input	7	8	Output

See Diagrams, beginning on Page 1–252

Hybrid, CB VCO — **10–Lead SIP, See Diag. 221**

NTE1247

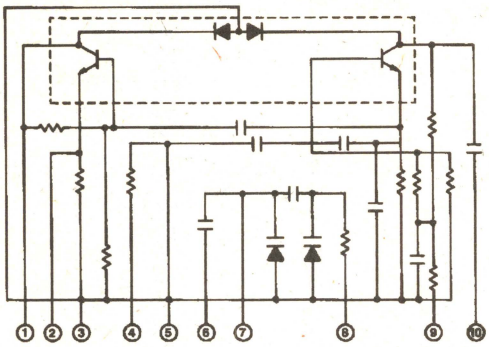

PLL (Phase Lock Loop) FM Multiplex Stereo Demod, V_{CC} = 16V Max — **16–Lead DIP, See Diag. 249**

NTE1248

V_{CC}	1	16	VCO Frequency Control
Demodulate FM Input	2	15	Phase Det Output to VCO
Demodulate FM Input	3	14	Phase Det Output to VCO
Lt Audio Output	4	13	Phase Det Input
Rt Audio Output	5	12	19kHz Test Point
Stereo Indicator Lamp	6	11	Phase Det Output to Switch
GND	7	10	Phase Det Output to Switch
Separation Control	8	9	IF Muting Circuit

Balance Modulator, V_{CC} = 14.4V — **7–Lead SIP, See Diag. 215**

NTE1249 Front View

7	Modulator Carrier Output
6	V_{CC}
5	DC Source Balance/ Modulator Control
4	GND
3	Carrier Input
2	Modulator Level Control
1	Balance Control/Audio Input

AFT Circuit — **16–Lead DIP, See Diag. 248**

NTE1250

N.C.	1	16	V_{CC}
N.C.	2	15	AFT Short Circuit
GND	3	14	N.C.
N.C.	4	13	AFT Capacitor
N.C.	5	12	AFT Capacitor
N.C.	6	11	Detector Input
Carrier Input	7	10	Carrier Output
N.C.	8	9	Detector Input

PLL (Phase Lock Loop) Frequency Synthesizer for CB, V_{DD} = –0.3V to +6V — **24–Lead DIP, See Diag. 252**

NTE1254

Program Input P1	1	24	Inhibit Output
Program Input P2	2	23	V_{SS}
Program Input P3	3	22	Instant Stop
Program Input P4	4	21	Phase Error Output
Program Input P5	5	20	Filter Amp Input
Program Input P6	6	19	Filter Amp Output
Program Input P7	7	18	Detector Input
Program Input P8	8	17	Divider Output
1/2 Output Reference	9	16	Detector Input
X'tal Input	10	15	Divider Output
X'tal Input	11	14	Input Mode Switch
V_{DD}	12	13	Divider Input

FM IF Detector — **14–Lead DIP, See Diag. 269**

NTE1257

Regulator Input	1	14	Discriminator Output
N.C.	2	13	Detector Input
IF Input	3	12	Detector Output
N.C.	4	11	De–Emphasis Circuit
Volume Control	5	10	N.C.
N.C.	6	9	N.C.
Volume Control	7	8	Output

Vertical Hold Oscillator, Output — **14–Lead DIP, See Diag. 286**

NTE1258

OSC Network	1	14	OSC Network
Sync Input	2	13	Shaping Output
Vertical Hold	3	12	N.C.
GND	4	11	Pulse Amp Output
	5	10	V_{CC}
N.C.	6	9	Vertical Output
GND	7	8	GND

See Diagrams, beginning on Page 1–252

Hybrid, CB VCO — **10–Lead SIP, See Diag. 221**

NTE1262

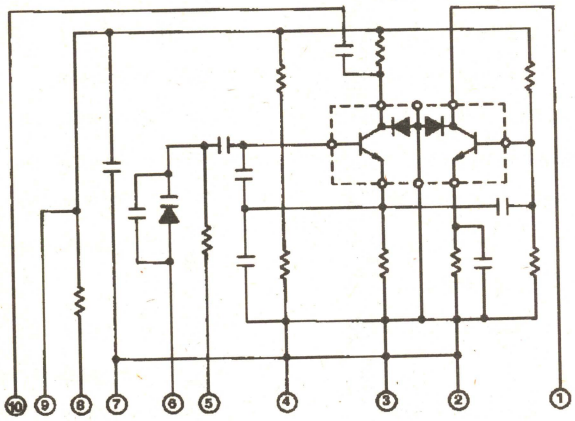

Record/Playback Circuit for VCR, V_{CC} = 12V Typ — **16–Lead DIP, See Diag. 249**

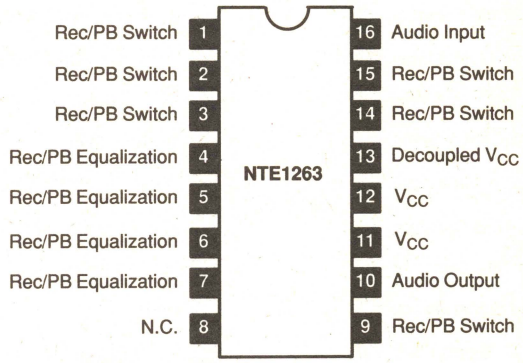

Video AGC Circuit for VCR, V_{CC} = 12V Typ — **16–Lead DIP, See Diag. 248**

NTE1264

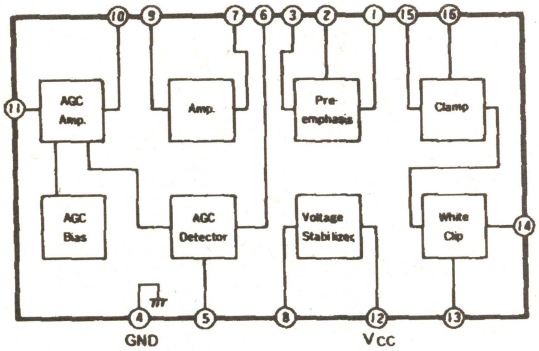

Noise Suppression Circuit for VCR, V_{CC} = 12V Typ — **18–Lead DIP, See Diag. 256**

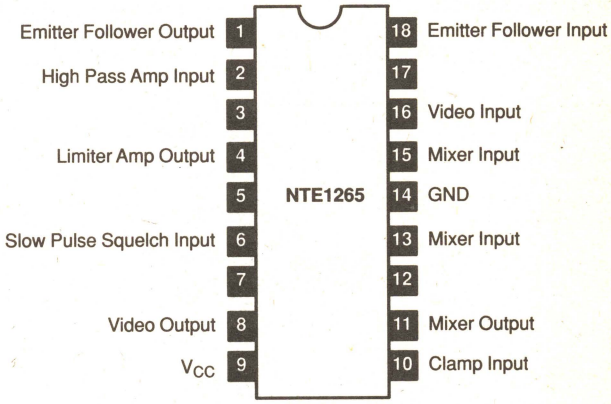

Color AGC Circuit for VCR, V_{CC} = 12V Typ — **16–Lead DIP, See Diag. 248**

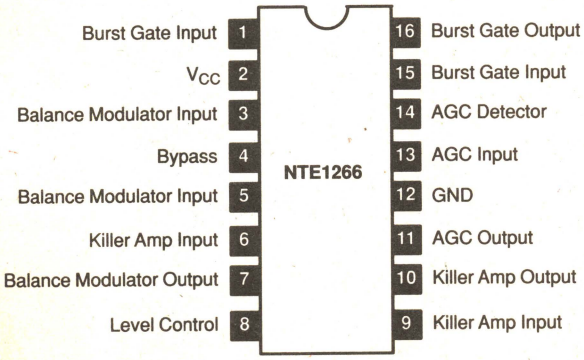

Dropout Compensation Circuit for VCR, V_{CC} = 12V Typ — **16–Lead DIP, See Diag. 248**

NTE1267

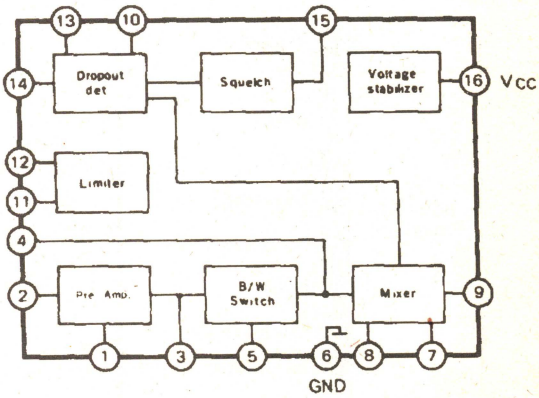

See Diagrams, beginning on Page 1–252

DC Servo Circuit for VCR, V_{CC} = 12V — **28–Lead DIP, See Diag. 253**

NTE1268

Ripple Filter	1	28	Detector 1 Input
Detector 2 Input	2	27	Detector Time Constant
Detector Time Constant	3	26	Jumper to Pin22 & Pin25
FG Amp Input	4	25	Jumper to Pin22 & Pin26
V_{CC}	5	24	GND Return
Flip–Flop Output	6	23	To Head Switch
Gate Input	7	22	Jumper to Pin25 & Pin26
Gate Time Constant	8	21	Multi Time Constant
Gate Time Constant	9	20	Multi Time Constant
Motor Speed Signal Output	10	19	GND
Ripple Filter	11	18	S & H Signal Source
Motor Phase Signal Output	12	17	Bypass
Bypass	13	16	Resistive Constant
Timing Signal Input	14	15	Timing Reference Signal

Color Signal Processing Circuit for VCR, V_{CC} = 12V Typ — **28–Lead DIP, See Diag. 253**

NTE1269

V_{CC}	1	28	H Sync Sep Cap (1µF)
Video Input	2	27	H Sync Sep Cap (1µF)
To Color Processor	3	26	N.C.
1500pF Bypass	4	25	VCO Freq Cont
Phase Comparator	5	24	VCO Time Constant
Time Constant Network	6	23	VCO Time Constant
From Color Processor	7	22	VCO Decoupled V_{CC}
X'tal Network	8	21	VCO Decoupled V_{CC}
X'tal Network Ret	9	20	N.C.
3.58MHz Output	10	19	V_{CC} Ret (GND)
N.C.	11	18	AFC Phase Comp Input
To Bandpass Filter	12	17	VCO Output (2.517MHz)
V_{CC} Ret (GND)	13	16	Voltage Regulator Output
630kHz Input	14	15	3.58MHz Input

Control Voltage Generator — **8–Lead SIP, See Diag. 236**

NTE1271 Front View

8	V_{OUT} 2
7	N.C.
6	V_{OUT} 1
5	Cont
4	GND
3	V_R
2	V_{IN}
1	V_{OUT} 0

Dual Audio Power Amp, 5W/Channel, V_{CC} = 18V — **20–Lead DIP, See Diag. 255**

NTE1273

Bypass 1	1	20	Bypass 2
Input 1	2	19	Input 2
Feedback 1	3	18	Feedback 2
High Frequency Comp 1	4	17	High Frequency Comp 2
Bypass 1	5	16	GND
High Frequency Comp 1	6	15	Bypass 2
Bypass 1	7	14	High Frequency Comp 2
GND	8	13	Bypass 2
Output 1	9	12	GND
V_{CC}	10	11	Output 2

Audio Power Amp, 5.8W, V_{CC} = 18V — **10–Lead SIP, See Diag. 239**

NTE1278 Front View

10	Bootstrap
9	Output
8	GND
7	GND
6	Gain Adjust
5	Feedback
4	Input
3	Muting Control
2	Ripple Filter
1	V_{CC}

Hybrid, Audio Power Amp, Dual Power Supply Req'd, 50W, V_{CC} = 53V — **10–Lead SIP, See Diag. 239**

NTE1281 Front View

10	Input (–)
9	V_{CC} (+)
8	Output
7	N.C.
6	N.C.
5	N.C.
4	N.C.
3	Output
2	V_{CC} (–)
1	Input (+)

Hybrid, Audio Power Amp, Dual Power Supply Req'd, 35W, V_{CC} = 45V — **10–Lead SIP, See Diag. 239**

NTE1282 Front View

10	Input (–)
9	V_{CC} (+)
8	Output
7	N.C.
6	N.C.
5	N.C.
4	N.C.
3	Output
2	V_{CC} (–)
1	Input (+)

See Diagrams, beginning on Page 1–252

Audio Power Amp, 5.8W, V_{CC} = 18V — **7–Lead SIP, See Diag. 277**

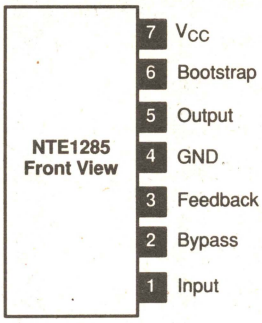

Audio Power Amp, w/Thermal Shutdown, V_{CC} = ±22V — **14–Lead Staggered DIP, See Diag. 251**

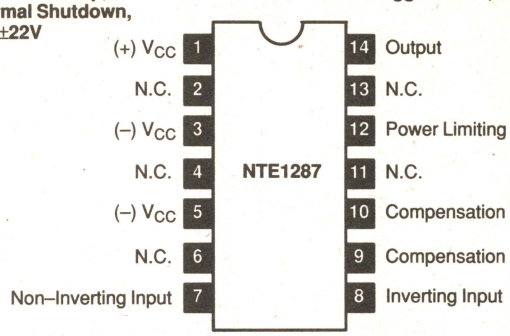

Audio Power Amp, 10W, For Car Radio V_{CC} = 18V Max — **5–Lead TO220, See Diag. 205**

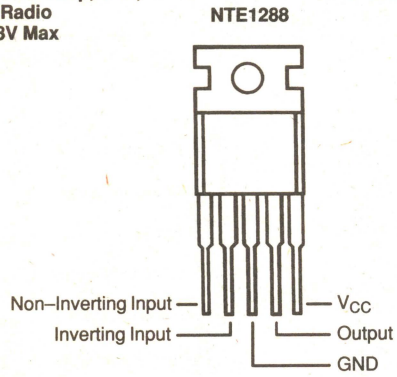

TV Vertical Deflection System, V_{CC} = 35V — **12–Lead DIP, See Diag. 261**

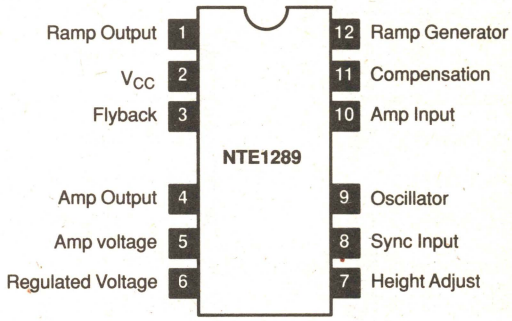

AM Tuner for Car Radio, V_{CC} = 16V — **16–Lead DIP, See Diag. 248**

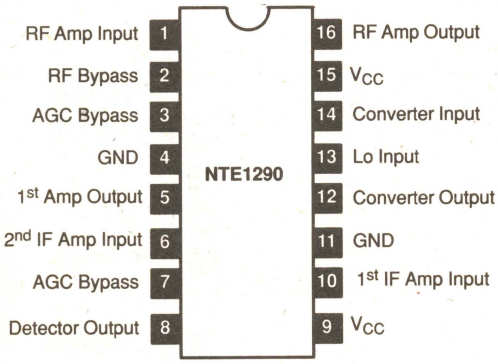

Dual Audio Power Amp, 5.8W/Channel, V_{CC} = 25V — **12–Lead SIP, See Diag. 289**

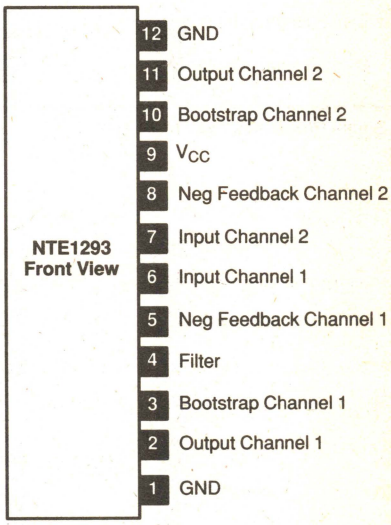

IF Amp w/Detector, V_{CC} = 18V — **14–Lead DIP, See Diag. 247**

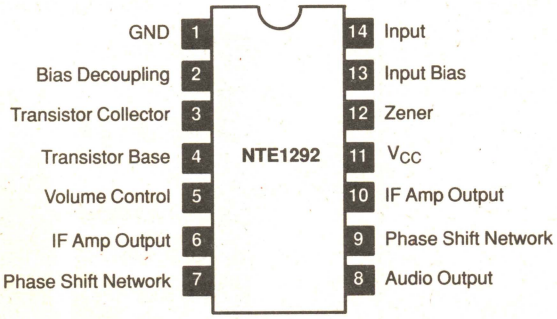

Audio Power Amp, 2W, V_{CC} = 16V — **8–Lead DIP, See Diag. 246**

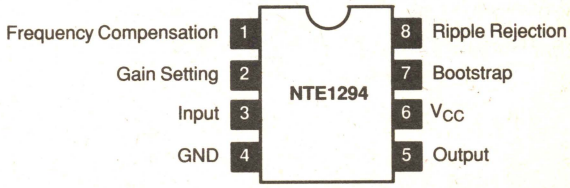

See Diagrams, beginning on Page 1–252

TV Signal Processor — **18–Lead DIP, See Diag. 287**

NTE1295

Pin	Function	Pin	Function
1	Horizontal Sawtooth	18	Video Input
2	Filter	17	Noise Detector
3	Horizontal Hold	16	Horizontal Sync Output
4	Bypass	15	V_{CC}
5	Protector Input	14	Bypass
6	Horizontal Driver	13	Vertical Hold
7	Voltage Regulator	12	Vertical Height
8	GND	11	Vertical Ramp Generator
9	Vertical Output	10	Vertical Driver Input

TV Chroma Processor/Demod — **16 + 2 Lead DIP, See Diag. 315**

NTE1296

Pin	Function	Pin	Function
17	APC Network		
1	B–Y Output	16	Demodulator Input
2	R–Y Output	15	Bypass
3	G–Y Output	14	Bandpass Amp Output
4	Crystal	13	V_{CC}
5	Crystal	12	Color Control
6	Tint Control	11	Chroma Input
7	VCO Control	10	Bypass
8	Flyback Pulse Input	9	Chroma Input
18	GND		

TV Color Signal Processor/Demod, V_{CC} = 15V Max — **22–Lead DIP, See Diag. 337**

NTE1297

Pin	Function	Pin	Function
1	GND	22	Color Signal Input
2	Color Saturation Control	21	Bypass
3	Burst Gate Pulse Input	20	ACC Filter
4	APC Filter	19	Killer Filter
5	APC Filter	18	Color Signal Output
6	Quartz Control	17	B–Y Signal Input
7	Quartz Control	16	R–Y Signal Input
8	Color Phase Control	15	V_{CC}
9	Color Subcarrier Output	14	B–Y Output
10	B–Y Subcarrier Input	13	R–Y Output
11	R–Y Subcarrier Input	12	G–Y Output

TV Signal Processor V_{CC} = 17V — **16–Lead DIP, See Diag. 248**

NTE1298

Pin	Function	Pin	Function
1	Video Input	16	Peaking 1
2	Sync Filter	15	Video Tone Control
3	Sync Hold	14	Peaking 2
4	Sync Switch	13	Contrast Control
5	Sync Output	12	Pedestal Hold
6	V_{CC}	11	Brightness Control
7	GND	10	DC Regeneration Ratio Adjust
8	Video Output	9	Blanking Input

TV Signal Processor, V_{CC} = 12V Typ — **24–Lead DIP, See Diag. 252**

NTE1299

Pin	Function	Pin	Function
1	Flyback Pulse	24	Sync Seperator Input
2	Horizontal Sawtooth	23	Video Input
3	Horizontal AGC Input	22	Sync Separator Output
4	GND	21	Bypass
5	Horizontal AGC Output	20	V_{CC}
6	Horizontal Hold	19	Vertical Hold
7	Bypass	18	Vertical OSC Output
8	V_{CC}	17	Vertical Drive Output
9	X Ray Protector	16	GND
10	Horizontal Drive Output	15	Vertical Height
11	RC Network	14	Feedback
12	X Ray Protector	13	Bypass

TV Remote Control, V_{CC} = 17V — **8–Lead SIP, See Diag. 224**

NTE1300 Front View

Pin	Function
8	To Time Constant
7	V_{CC}
6	Output
5	To Time Constant
4	GND
3	To Time Constant
2	To Time Constant
1	Sine Wave Input

AM/FM, IF, V_{CC} = 5V — **7–Lead SIP, See Diag. 220**

NTE1301 Front View

Pin	Function
7	RF Output
6	V_{CC}
5	Coupling Capacitor
4	GND
3	Coupling Capacitor
2	AGC Input
1	RF Input

See Diagrams, beginning on Page 1–252

AF Power Output, 0.5W, V_{CC} = 10V — **14–Lead DIP, See Diag. 267**

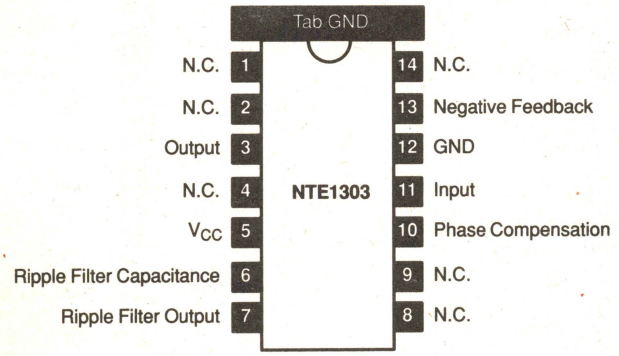

Chroma Processor, V_{CC} = 17V — **24–Lead DIP, See Diag. 272**

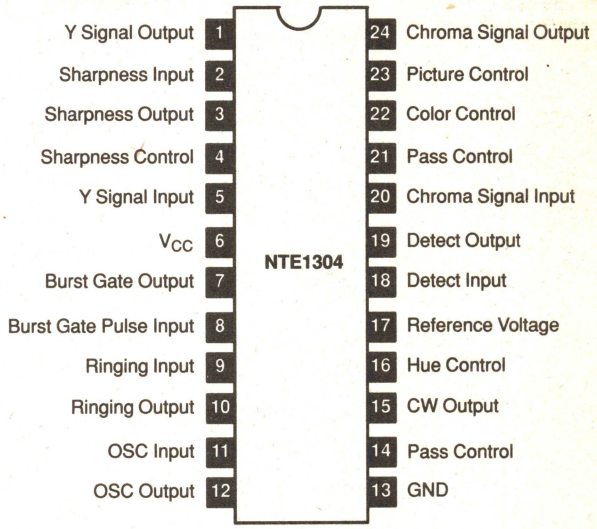

Video IF, V_{CC} = 17V — **24–Lead DIP, See Diag. 272**

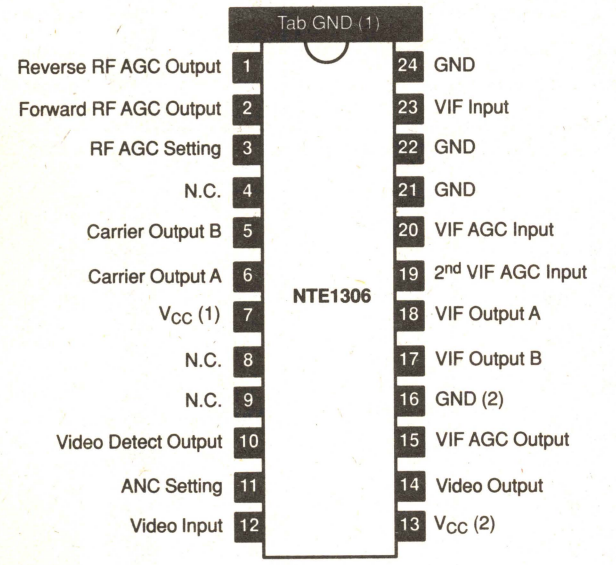

TV Sound IF, Detector — **14–Lead DIP, See Diag. 250**

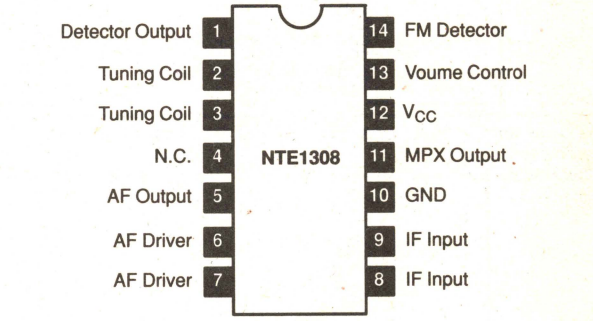

FM IF Amp — **7–Lead SIP, See Diag. 216**

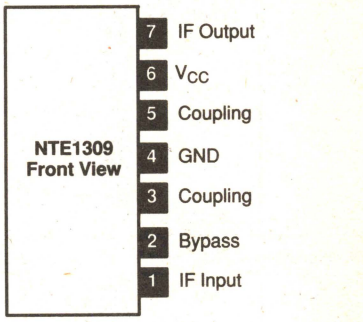

Noise Cancelling Amp, V_{CC} = 17V — **18–Lead DIP, See Diag. 270**

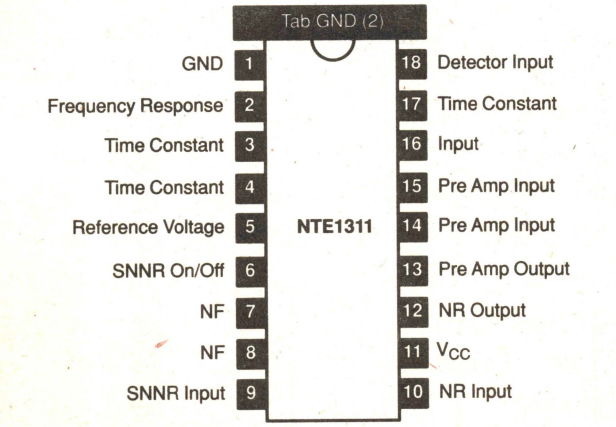

Vertical OSC Amp, V_{CC} = 20V — **14–Lead DIP, See Diag. 247**

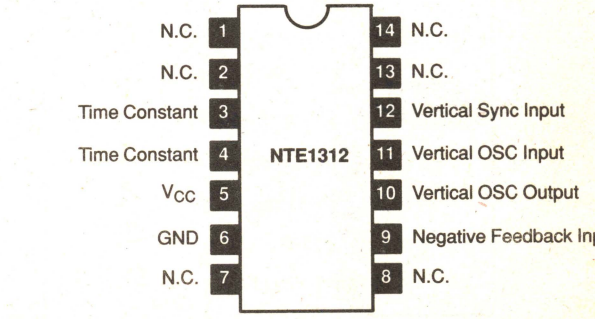

See Diagrams, beginning on Page 1–252

Dual, AF PO, 35W
V_{CC} = ±30V Typ
18–Lead SIP, See Diag. 493

NTE1315 Front View

18	Rt Ch Input (–)
17	Rt Ch Input (+)
16	GND
15	Compensation
14	(–) V_{CC}
13	Rt Ch Output
12	Bypass
11	(+) V_{CC}
10	Lt Ch Output
9	(–) V_{CC}
8	Compensation
7	Compensation
6	Muting
5	Compensation
4	Compensation
3	Compensation
2	Lt Ch Input (+)
1	Lt Ch Input (–)

Dual, AF PO, 50W,
V_{CC} = ±35V Typ
18–Lead SIP, See Diag. 493

NTE1316 Front View

18	Rt Ch Input (–)
17	Rt Ch Input (+)
16	GND
15	Compensation
14	(–) V_{CC}
13	Rt Ch Output
12	Bypass
11	(+) V_{CC}
10	Lt Ch Output
9	(–) V_{CC}
8	Compensation
7	Compensation
6	Muting
5	Compensation
4	Compensation
3	Compensation
2	Lt Ch Input (+)
1	Lt Ch Input (–)

Dual, AF PO, 50W,
V_{CC} = ±35.5V Typ
18–Lead SIP, See Diag. 493

NTE1317 Front View

18	Rt Ch Input (–)
17	Rt Ch Input (+)
16	GND
15	Compensation
14	(–) V_{CC}
13	Rt Ch Output
12	Bypass
11	(+) V_{CC}
10	Lt Ch Output
9	(–) V_{CC}
8	Compensation
7	Compensation
6	Muting
5	Compensation
4	Compensation
3	Compensation
2	Lt Ch Input (+)
1	Lt Ch Input (–)

Audio Power Amp,
15W, 2 Power
Supplies Req'd,
V_{CC} = ±37V
10–Lead SIP, See Diag. 229

NTE1320 Front View

10	(–) Input
9	(+) V_{CC}
8	Output
7	N.C.
6	N.C.
5	N.C.
4	N.C.
3	Output
2	(–) V_{CC}
1	(+) Input

Audio Power Amp,
80W,
V_{CC} = ±65V
10–Lead SIP, See Diag. 290

NTE1322 Front View

10	(–) Input
9	(–) V_{CC}
8	Output
7	N.C.
6	N.C.
5	N.C.
4	N.C.
3	Output
2	(+) V_{CC}
1	(+) Input

Audio Power Amp,
15W,
V_{CC} = ±38V
10–Lead SIP, See Diag. 229

NTE1323 Front View

10	Driver Input
9	Pre–Driver Output
8	Bypass
7	Feedback
6	Input
5	Bypass
4	Bypass
3	V_{CC}
2	Output
1	GND

Audio Power Amp,
24W, 2 Power
Supplies Req'd,
V_{CC} = 35V
10–Lead SIP, See Diag. 225

NTE1326 Front View

10	(+) V_{CC}^2
9	Stabilization
8	(+) V_{CC}^1
7	Output
6	(–) V_{CC}^1
5	Stabilization
4	(–) V_{CC}^2
3	(–) Input
2	GND
1	(+) Input

Audio Power Amp,
35W, 2 Power
Supplies Req'd,
V_{CC} = ±43V
10–Lead SIP, See Diag. 225

NTE1327 Front View

10	(+) V_{CC}^2
9	Stabilization
8	(+) V_{CC}^1
7	Output
6	(–) V_{CC}^1
5	Stabilization
4	(–) V_{CC}^2
3	(–) Input
2	GND
1	(+) Input

Audio Power Amp,
50W, 2 Power
Supplies Req'd,
V_{CC} = ±50V
10–Lead SIP, See Diag. 225

NTE1328 Front View

10	(+) V_{CC}^2
9	Stabilization
8	(+) V_{CC}^1
7	Output
6	(–) V_{CC}^1
5	Stabilization
4	(–) V_{CC}^2
3	(–) Input
2	GND
1	(+) Input

See Diagrams, beginning on Page 1–252

Dual, Audio Power Amp, 20W/Channel V_{CC} = 63V

15–Lead SIP, See Diag. 227

NTE1329 Front View

15	Rt Ch Input
14	Rt Ch Feedback
13	GND
12	GND
11	Rt Ch Output
10	Rt Ch Feedback
9	(+) V_{CC}^2
8	GND
7	(+) V_{CC}^1
6	Lt Ch Feedback
5	Lt Ch Output
4	GND
3	GND
2	Lt Ch Feedback
1	Lt Ch Input

Dual, Audio Power Amp, 15W/Channel, 2 Power Supplies Req'd, V_{CC} = ±31V

16–Lead SIP, See Diag. 232

NTE1330 Front View

16	Rt Ch Input
15	Rt Ch Feedback
14	GND
13	Rt Ch Bias
12	(–) V_{CC}^2
11	Rt Ch Feedback
10	Rt Ch Output
9	(+) V_{CC}^2
8	(+) V_{CC}^1
7	Lt Ch Output
6	Lt Ch Feedback
5	(–) V_{CC}^1
4	Lt Ch Bias
3	GND
2	Lt Ch Feedback
1	Lt Ch Input

Dual, Audio Power Amp, 25W/Channel, 2 Power Supplies Req'd, V_{CC} = ±38V

16–Lead SIP, See Diag. 232

NTE1331 Front View

16	Rt Ch Input
15	Rt Ch Feedback
14	GND
13	Rt Ch Bias
12	(–) V_{CC}^2
11	Rt Ch Feedback
10	Rt Ch Output
9	(+) V_{CC}^2
8	(+) V_{CC}^1
7	Lt Ch Output
6	Lt Ch Feedback
5	(–) V_{CC}^1
4	Lt Ch Bias
3	GND
2	Lt Ch Feedback
1	Lt Ch Input

Audio Power Amp, 40W, 2 Power Supplies Req'd, V_{CC} = ±48V

10–Lead SIP, See Diag. 229

NTE1333 Front View

10	(–) Input
9	(+) V_{CC}
8	Output
7	N.C.
6	N.C.
5	N.C.
4	N.C.
3	Output
2	(–) V_{CC}
1	(+) Input

Audio Power Amp, 80W, 2 Power Supplies Req'd, V_{CC} = ±65V

10–Lead SIP, See Diag. 290

NTE1335 Front View

10	(–) Input
9	(+) V_{CC}
8	Output
7	N.C.
6	N.C.
5	N.C.
4	N.C.
3	Output
2	(–) V_{CC}
1	(+) Input

Audio Power Amp, 70W, 2 Power Supplies Req'd, V_{CC} = ±55V

10–Lead SIP, See Diag. 225

NTE1337 Front View

10	(–) Input
9	(–) V_{CC}
8	Output
7	N.C.
6	N.C.
5	N.C.
4	N.C.
3	Output
2	(+) V_{CC}
1	(+) Input

Voltage Amp for 40W to 50W Audio Power Amp, V_{CC} = ±55V

15–Lead SIP, See Diag. 292

NTE1338 Front View

15	Rt Ch Input
14	Rt Ch Feedback
13	GND
12	GND
11	Rt Ch Output
10	Rt Ch Feedback
9	(+) V_{CC}^2
8	GND
7	(+) V_{CC}^1
6	Lt Ch Feedback
5	Lt Ch Output
4	GND
3	GND
2	Lt Ch Feedback
1	Lt Ch Input

Voltage Amp for 80W to 90W Audio Power Amp, V_{CC} = ±65V

15–Lead SIP, See Diag. 292

NTE1339 Front View

15	Rt Ch Input
14	Rt Ch Feedback
13	GND
12	GND
11	Rt Ch Output
10	Rt Ch Feedback
9	(+) V_{CC}^2
8	GND
7	(+) V_{CC}^1
6	Lt Ch Feedback
5	Lt Ch Output
4	GND
3	GND
2	Lt Ch Feedback
1	Lt Ch Input

Audio Power Amp, 24W, 2 Power Supplies Req'd, V_{CC} = ±25V

10–Lead SIP, See Diag. 225

NTE1340 Front View

10	(+) V_{CC}^2
9	Stabilization
8	(+) V_{CC}^1
7	Output
6	(–) V_{CC}^1
5	Stabilization
4	(–) V_{CC}^2
3	(–) Input
2	GND
1	(+) Input

See Diagrams, beginning on Page 1–252

Audio Power Amp, 15W, 2 Power Supplies Req'd, V_{CC} = 63V

10–Lead SIP, See Diag. 225

NTE1341 Front View

10	(+) V_{CC}^2
9	Stabilization
8	(+) V_{CC}^1
7	Output
6	(–) V_{CC}^1
5	Stabilization
4	(–) V_{CC}^2
3	(–) Input
2	GND
1	(+) Input

Dual, Audio Power Amp, 10W/Channel, V_{CC} = 50V Max

15–Lead SIP, See Diag. 228

NTE1343 Front View

15	Rt Ch Input
14	Rt Ch Feedback
13	GND
12	GND
11	Rt Ch Output
10	Rt Ch Feedback
9	(+) V_{CC}^2
8	GND
7	(+) V_{CC}^1
6	Lt Ch Feedback
5	Lt Ch Output
4	GND
3	GND
2	Lt Ch Feedback
1	Lt Ch Input

Dual, Audio Power Amp, 25W/Channel, V_{CC} = 70V

15–Lead SIP, See Diag. 227

NTE1344 Front View

15	Rt Ch Input
14	Rt Ch Feedback
13	GND
12	GND
11	Rt Ch Output
10	Rt Ch Feedback
9	(+) V_{CC}^2
8	GND
7	(+) V_{CC}^1
6	Lt Ch Feedback
5	Lt Ch Output
4	GND
3	GND
2	Lt Ch Feedback
1	Lt Ch Input

Dual, Audio Power Amp, 30W/Channel, 2 Power Supplies Req'd, V_{CC} = ±41V

16–Lead SIP, See Diag. 232

NTE1345 Front View

16	Rt Ch Input
15	Rt Ch Feedback
14	GND
13	Rt Ch Bias
12	(–) V_{CC}^2
11	Rt Ch Feedback
10	Rt Ch Output
9	(+) V_{CC}^2
8	(+) V_{CC}^1
7	Lt Ch Output
6	Lt Ch Feedback
5	(–) V_{CC}^1
4	Lt Ch Bias
3	GND
2	Lt Ch Feedback
1	Lt Ch Input

Audio Power Amp, 60W, 2 Power Supplies Req'd, V_{CC} = ±55V

10–Lead SIP, See Diag. 290

NTE1346 Front View

10	(–) Input
9	(+) V_{CC}
8	Output
7	N.C.
6	N.C.
5	N.C.
4	N.C.
3	Output
2	(–) V_{CC}
1	(+) Input

Dual, Audio Power Amp, 20W/Channel 2 Power Supplies Req'd, V_{CC} = ±32V

10–Lead SIP, See Diag. 225

NTE1347 Front View

16	Rt Ch Input
15	Rt Ch Feedback
14	GND
13	Rt Ch Bias
12	(–) V_{CC}^2
11	Rt Ch Feedback
10	Rt Ch Output
9	(+) V_{CC}^2
8	(+) V_{CC}^1
7	Lt Ch Output
6	Lt Ch Feedback
5	(–) V_{CC}^1
4	Lt Ch Bias
3	GND
2	Lt Ch Feedback
1	Lt Ch Input

See Diagrams, beginning on Page 1–252

25W. 2 Channel, Darlington Power Pack, 2 Power Supplies Req'd, V_{CC} = 120V or ±60V — **16–Lead SIP, See Diag. 232**

NTE1356 Front View

16	Rt Ch Input
15	(+) V_{CC}^2
14	Rt Ch Feedback
13	Rt Ch Output
12	Rt Ch Feedback
11	(–) V_{CC}^2
10	Bypass
9	N.C.
8	N.C.
7	Bypass
6	(–) V_{CC}^1
5	Lt Ch Feedback
4	Lt Ch Output
3	Lt Ch Feedback
2	(+) V_{CC}^1
1	Lt Ch Input

Audio Power Amp 50W, 2 Power Supplies Req'd, V_{CC} = ±53V — **10–Lead SIP, See Diag. 285**

NTE1358 Front View

10	Input
9	(+) V_{CC}
8	Direct Output
7	Internal Series Resistor Output
6	180pF Cap to Pin9 (Feedback)
5	180pF Cap to Pin2 (Feedback)
4	Internal Series Resistor Output
3	Direct Output
2	(–) V_{CC}
1	Input

22W Min, 2 Channel, AF Power Amp, V_{CC} = 50V Max — **15–Lead SIP, See Diag. 238**

NTE1359 Front View

15	Rt Ch Input
14	Decouple
13	GND
12	GND
11	Rt Ch Output
10	Rt Ch Feedback
9	Ripple Filter
8	GND
7	V_{CC}
6	Lt Ch Feedback
5	Lt Ch Output
4	GND
3	GND
2	Decouple
1	Lt Ch Input

Audio Power Amp, 12W BTL, V_{CC} = 18V — **9–Lead SIP, See Diag. 311**

NTE1361 Front View

9	V_{CC}
8	Output 1
7	Output 2
6	GND High
5	Feedback
4	Feedback
3	Muting
2	GND Low
1	Input

Audio Power Amp, 5.5W, V_{CC} = 18V — **9–Lead SIP, See Diag. 311**

NTE1362 Front View

9	Output
8	GND
7	Bootstrap
6	Negative Feedback
5	Decoupling
4	Input
3	Ripple Filter
2	N.C.
1	V_{CC}

Audio Power Amp, 4.2W, V_{CC} = 18V Max — **9–Lead SIP, See Diag. 312**

NTE1363 Front View

9	V_{CC}
8	Feedback
7	100µf Cap
6	N.C.
5	Input
4	Negative Feedback
3	Feedback
2	GND
1	Output

Dual, Audio Power Amp, 5.5W/Channel, V_{CC} = 18V — **14–Lead SIP, See Diag. 288**

NTE1364 Front View

14	V_{CC}^2
13	Ch 2 Input
12	Ch 2 Decoupling
11	Ch 2 Ripple Filter
10	Ch 2 Bootstrap
9	GND
8	Ch 2 Output
7	Ch 1 Output
6	GND
5	Ch 1 Bootstrap
4	Ch 1 Ripple Filter
3	Ch 1 Decoupling
2	Ch 1 Input
1	V_{CC}^1

Audio Power Amp, 5W, V_{CC} = 13.2V Typ — **9–Lead SIP, See Diag. 312**

NTE1365 Front View

9	V_{CC}
8	47µf Cap
7	GND
6	Input
5	47µf Cap
4	N.C.
3	Feedback
2	GND
1	Output

Audio Power Amp, 4.5W, 15W BTL, V_{CC} = 20V Max — **18–Lead DIP, See Diag. 256**

NTE1367

V_{CC}	1	18	Bypass
Ch 1 Output	2	17	Ch 2 Output
GND	3	16	GND
Ch 1 Feedback	4	15	Ch 2 Feedback
Ch 1 Feedback	5	14	Ch 2 Feedback
Bypass	6	13	Bypass
Ch 1 Input	7	12	Ch 2 Input
Phase Converter	8	11	Phase Converter
GND	9	10	Differential Amp

See Diagrams, beginning on Page 1–252

Dual, AF PO, 5.8W, V_{CC} = 16V Max — **12–Lead SIP, See Diag. 289**

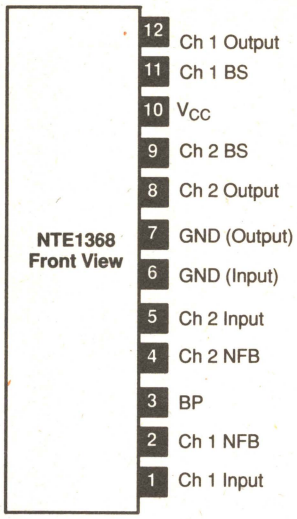

Audio Power Amp, 5.5W, V_{CC} = 20V Max — **11–Lead SIP, See Diag. 222**

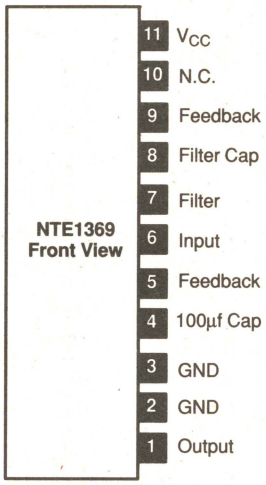

Audio Power Amp, 5.8W, for Car Radio, V_{CC} = 18V — **10–Lead SIP, See Diag. 239**

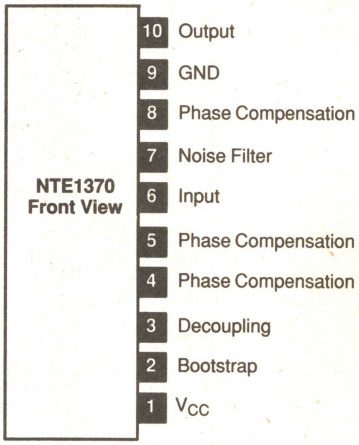

Dual, Audio Power Amp, 5.3W/Channel, V_{CC} = 20V Max — **12–Lead SIP, See Diag. 319**

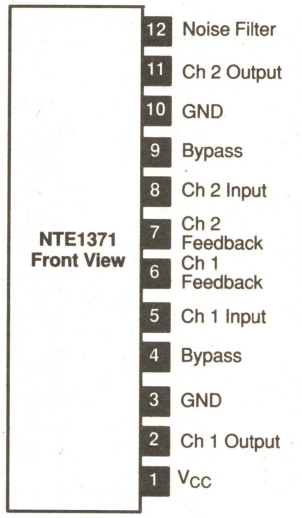

Dual, Audio Power Amp, 3.9W/12W BTL, V_{CC} = 18V — **20–Lead DIP, See Diag. 255**

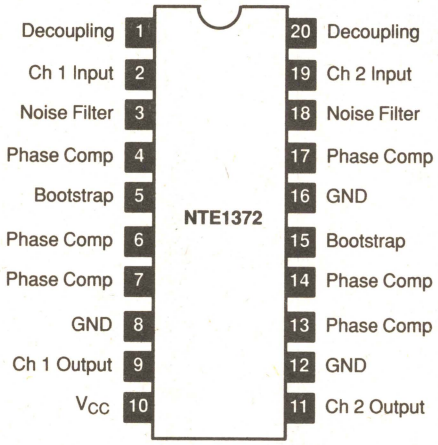

Dual, Audio Power Amp, 7.5W/Channel, V_{CC} = 18V Max — **12–Lead SIP, See Diag. 319**

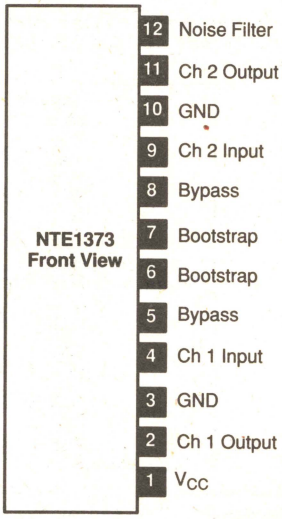

Audio Power Amp, 12W, V_{CC} = 28V — **5–Lead TO220, See Diag. 205**

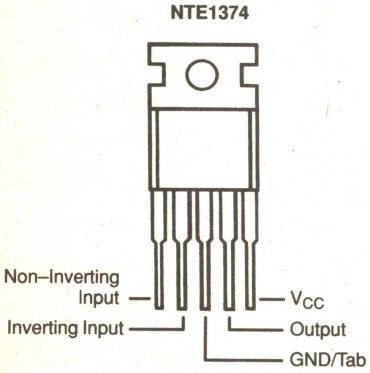

Audio Power Amp, 5.8W, for Car Radio, V_{CC} = 13.2V — **10–Lead SIP, See Diag. 240**

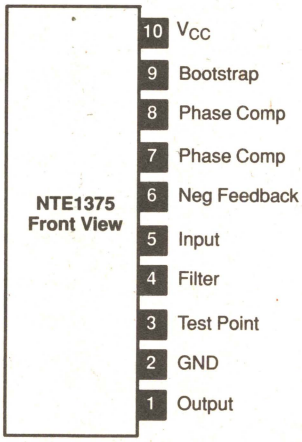

Audio Power Amp, 22W, V_{CC} = ±2.5V Min — **5–Lead TO220, See Diag. 205**

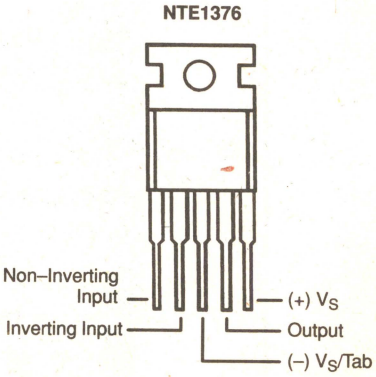

See Diagrams, beginning on Page 1–252

Dual, Audio Power Amp, 6W/Channel, 19W BTL, V_{CC} = 18V — **14–Lead SIP, See Diag. 320**

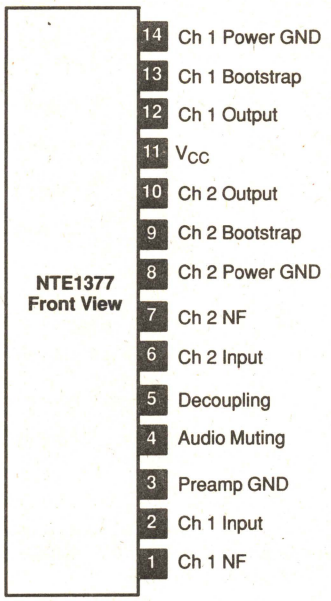

Audio Power Amp, 10W, V_{CC} = ±15V — **5–Lead TO220, See Diag. 205**

NTE1378

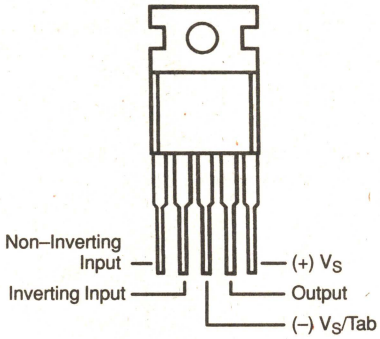

Audio Power Amp, 14W, V_{CC} = ±18V — **5–Lead TO220, See Diag. 205**

NTE1380

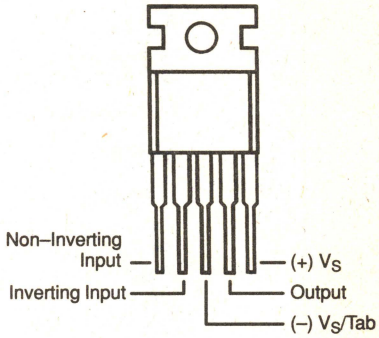

Audio Power Amp, 2.1W, V_{CC} = 13V Max — **14–Lead DIP, See Diag. 334**

NTE1381

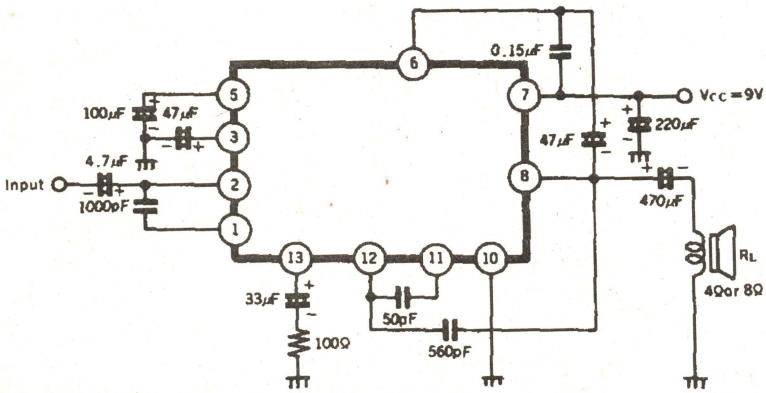

Audio Power Amp, 4.2W/9W BTL, V_{CC} = 18V — **20–Lead DIP, See Diag. 321**

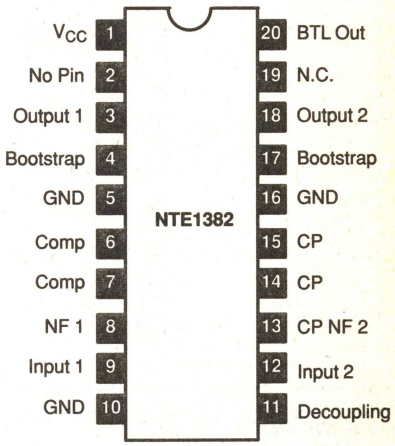

Dual, Audio Power Amp, 5.1W/10.5W BTL — **18–Lead DIP, See Diag. 256**

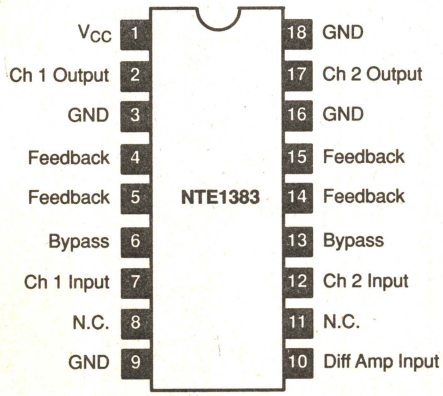

Audio Power Amp, 3.5W, V_{CC} = 16V — **10–Lead SIP, See Diag. 237**

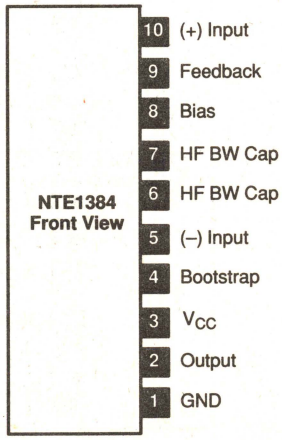

Dual, Audio Power Amp, 2.4W/Channel, V_{CC} = 24V — **10–Lead SIP, See Diag. 239**

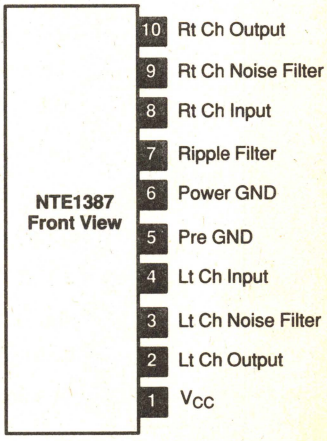

See Diagrams, beginning on Page 1–252

Audio Power Amp, 5.8W, V_{CC} = 13.2V — **10–Lead SIP, See Diag. 237**

NTE1388 Front View

10	Output
9	N.C.
8	GND
7	Bootstrap
6	Filter
5	Filter
4	Decoupling
3	N.C.
2	Input
1	V_{CC}

Audio Power Amp, 20W, V_{CC} = 25V — **12–Lead SIP, See Diag. 289**

NTE1389 Front View

12	GND
11	Output 1
10	Feedback
9	V_{CC}
8	47µf Cap
7	(+) Input 2
6	(+) Input 1
5	(–) Input 1
4	(–) Input 2
3	Bypass
2	Feedback
1	Output 2

Audio Power Amp, 12W, V_{CC} = 25V — **10–Lead SIP, See Diag. 322**

NTE1390 Front View

10	V_{CC}
9	Output 1
8	Power Amp GND
7	Output 2
6	DC Audio Muting
5	NF 2
4	NF 1
3	Preamp GND
2	Input
1	AC Audio Muting

Audio Power Amp, 12W, V_{CC} = 25V — **10–Lead SIP, See Diag. 322**

NTE1391 Front View

10	AC Audio Muting
9	Input
8	Preamp GND
7	NF 1
6	NF 2
5	DC Audio Muting
4	Output 2
3	Power Amp GND
2	Output 1
1	V_{CC}

Audio Power Amp, 7W, V_{CC} = 22V — **10–Lead SIP, See Diag. 243**

NTE1392 Front View

10	Feedback
9	Input
8	Compensation
7	Compensation
6	Feedback
5	V_{CC}
4	Internal Bias
3	Internal Bias
2	Output
1	GND

Audio Power Amp, 7W/, V_{CC} = 22V — **10–Lead SIP, See Diag. 242**

NTE1393 Front View

1	Feedback
2	Input
3	Compensation
4	Compensation
5	Feedback
6	V_{CC}
7	Internal Bias
8	Internal Bias
9	Output
10	GND

Dual, Audio Power Amp, 5.8W/Channel, 17W BTL, V_{CC} = 18V — **12–Lead SIP, See Diag. 349**

NTE1394 Front View

12	V_{CC}
11	Ch 1 Bootstrap
10	Ch 1 Output
9	Ch 1 Noise Filter
8	Ch 1 Input
7	Prestage GND
6	Power GND
5	Ch 2 Input
4	Ch 2 Noise Filter
3	V_{CC}
2	Ch 2 Output
1	Ch 2 Bootstrap

Dual, Audio Power Amp, 5.8W/Channel — **12–Lead SIP, See Diag. 349**

NTE1395 Front View

12	Ch 1 Output
11	Ch 1 Bootstrap
10	V_{CC}
9	GND
8	Ch 2 Bootstrap
7	Ch 2 Output
6	Ch 2 Bypass
5	Ch 2 Input
4	GND
3	Bypass
2	Ch 1 Input
1	Ch 1 Bypass

20W Bridge Booster for Car Radio, V_{CC} = 18V — **11–Lead SIP, See Diag. 310**

NTE1396 Front View

11	Bootstrap 1
10	Output 1
9	(+) V_S
8	Output 2
7	Bootstrap 2
6	GND
5	(+) Input 2
4	(–) Input 2
3	SVRR
2	(+) Input 1
1	(–) Input 1

See Diagrams, beginning on Page 1–252

Dual, AF PO, 5.8W, V_{CC} = 18V — **12–Lead SIP, See Diag. 349**

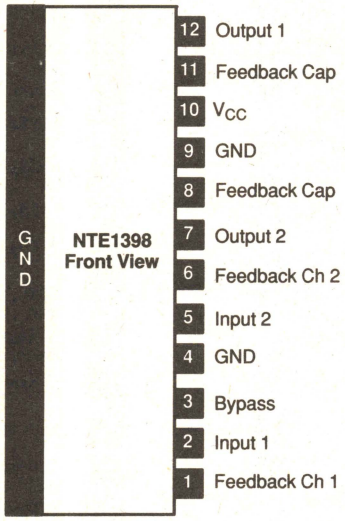

Dual, Audio Power Amp, 18W, BTL, V_{CC} = 25V — **12–Lead SIP, See Diag. 289**

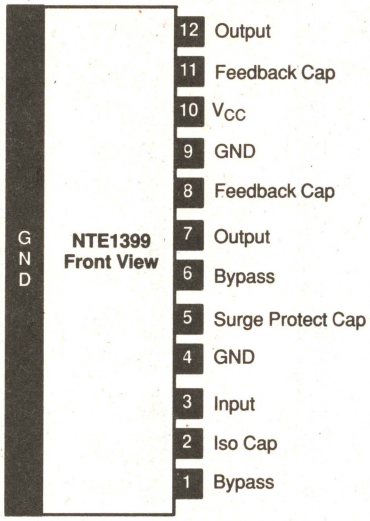

FM Limiter Circuit, V_{CC} = 12V Typ — **14–Lead DIP, See Diag. 247**

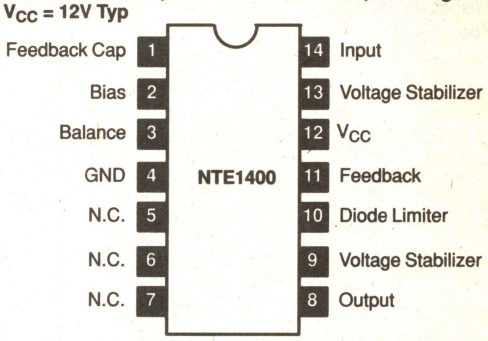

TV Sync Separator, Ped Clamp — **16–Lead DIP, See Diag. 248**

NTE1401

AT TIME OF PUBLICATION, DATA ON NTE1401, AN ACTIVE NUMBER, WAS NOT AVAILABLE

Electronic Channel Selector, V_{CC} = 6V Typ — **24–Lead DIP, See Diag. 252**

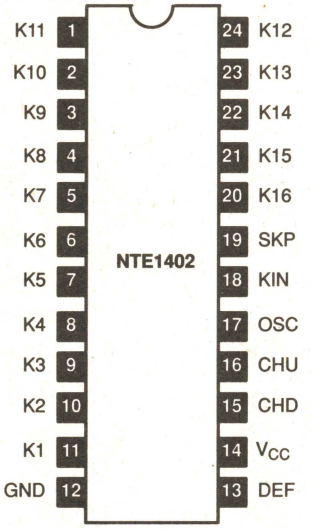

TV Sync Separator, Horizontal OSC, V_{CC} = 15V — **16–Lead DIP, See Diag. 248**

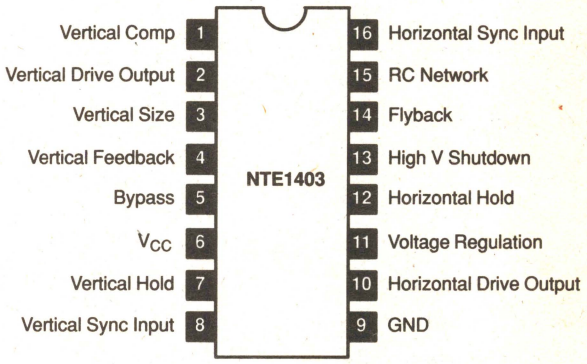

Sound IF Amp, Det, V_{CC} = 13.8V — **16–Lead DIP, See Diag. 348**

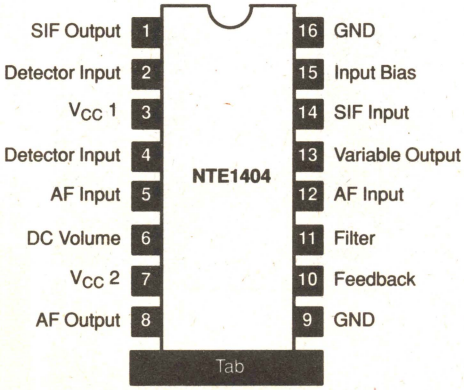

Vertical Deflection Output, V_{CC} = 27.6V Max — **11–Lead SIP, See Diag. 222**

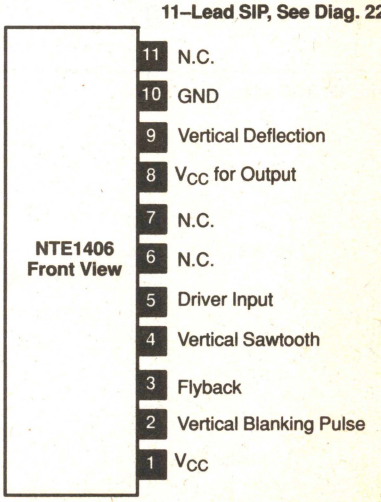

See Diagrams, beginning on Page 1–252

CMOS, Color Signal Processor for VCR, V_{DD} = –0.3V to +8V — **16–Lead DIP, See Diag. 249**

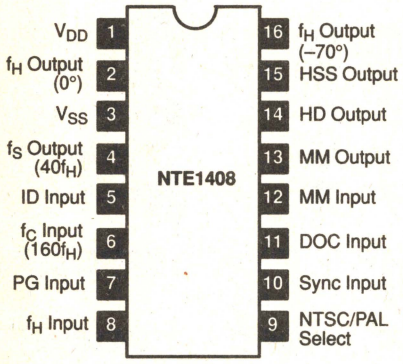

Electronic Channel Selector, V_{CC} = 15V — **24–Lead DIP, See Diag. 252**, ***24–Lead DIP, See Diag. 459**

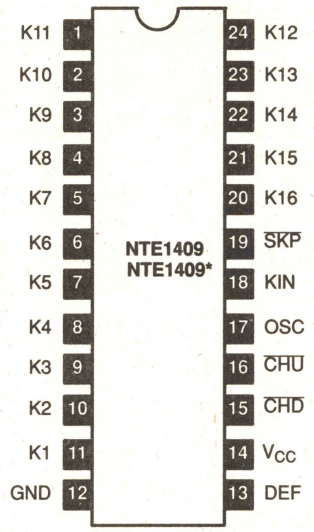

Chroma Video Signal Processor, V_{CC} = 12V Typ — **28–Lead DIP, See Diag. 253**

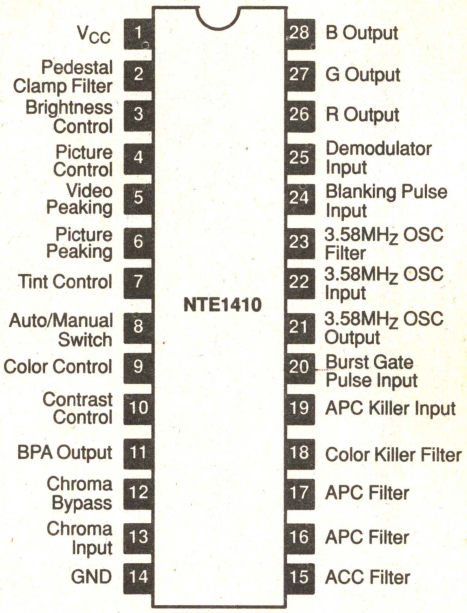

Recording Video Signal Processor, V_{CC} = 12V Typ — **24–Lead DIP, See Diag. 252**

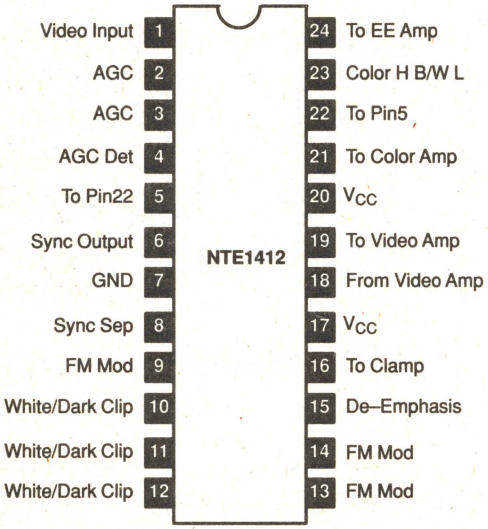

Digital AC Clock Timer for VCR, V_{DD} = –16V to +0.3V — **40–Lead DIP, See Diag. 299**

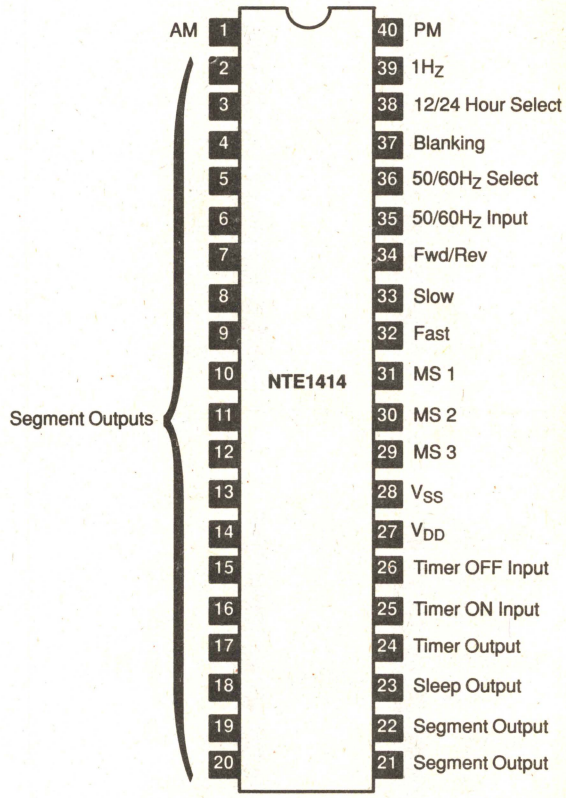

Video IF, AGC Amp, V_{CC} = 15V — **16–Lead DIP, See Diag. 248**

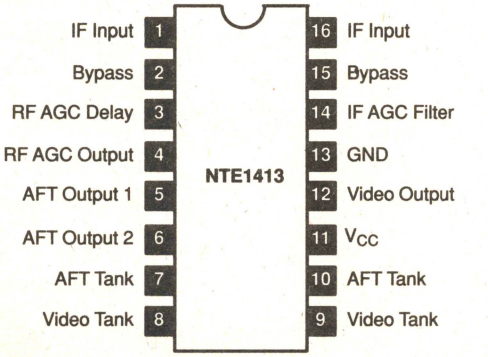

See Diagrams, beginning on Page 1–252

Color Compensation Circuit, V_{CC} = 14.4V — **14–Lead DIP, See Diag. 247**

NTE1415

To Chroma Processor	1	14	Auto Color Switch Input
From Chroma Processor	2	13	From Chroma Processor
Color Tack Switch	3	12	V_{CC}
GND	4	11	Auto Color Amp Output
To Chroma Processor	5	10	Color Crystal
To Chroma Processor	6	9	Color Crystal
From Chroma Processor	7	8	22pF Bypass

Chroma and Luminance Processor for NTSC Color TV, V_{CC} = 12V — **28–Lead DIP, See Diag. 253**

NTE1416

V_{CC}	1	28	B Output
Clamp Filter	2	27	G Output
Brightness Control	3	26	R Output
Resolution Control	4	25	Demod Input
Luminance Input	5	24	Blanking Input
Peaking Filter	6	23	OSC
Tint Control	7	22	OSC
Auto Set Voltage	8	21	OSC
Color Control	9	20	Gate Pulse Input
Contrast Output	10	19	APC/ACC Input
Chroma Output	11	18	Killer Filter
Bypass	12	17	APC Filter
Chroma Input	13	16	APC Filter
GND	14	15	APC Filter

Deflection Signal Processor, V_{CC} = 15V Max — **24–Lead DIP, See Diag. 252**

NTE1417

Flyback Pulse	1	24	Sync Sep Input
Horizontal Sawtooth	2	23	Video Input
Horizontal AGC Input	3	22	Sync Sep Output
GND	4	21	Bypass
Horizontal AGC Output	5	20	$V_{CC}2$
Horizontal Hold	6	19	Vertical Hold
Bypass	7	18	Vertical OSC Output
$V_{CC}1$	8	17	Vertical Drive Output
X Ray Protect	9	16	GND
Horizontal Output	10	15	Vertical Height
R/C Network	11	14	Feedback
X Ray Protect	12	13	Bypass

TV Sound IF Amp, V_{CC} = 16V — **14–Lead DIP, See Diag. 250**

NTE1418

FM Det Output	1	14	Audio Muting
IF Amp Output	2	13	Volume Control
FM Det Input	3	12	V_{CC}
Muting	4	11	MPX Output
AF Output	5	10	GND
Tone Control	6	9	IF Amp Input
AF Drive Input	7	8	IF Amp Input

Head Amp Circuit for VCR, V_{CC} = 12V Typ — **14–Lead DIP, See Diag. 247**

NTE1419

V_{CC}	1	14	To Amp No 1 Peaking Ckt
1µf Bypass Cap	2	13	Output SW 1
Input Head 1	3	12	Video Head Switch Pulse Input
GND	4	11	Mixer Amp In
Input Head 2	5	10	Mixer Amp Out
1µf Bypass Cap	6	9	Output SW 2
Ripple Filer	7	8	To Amp No 2 Peaking Ckt

Playback Video Signal Processor for VCR, V_{CC} = 12V Typ — **29–Lead DIP, See Diag. 314**

NTE1422

Clamp	1	29	Chroma Signal Input
Video Signal Output	2	28	GND
Playback V_{CC}	3	27	Noise Canceller
E–E Video Signal Input	4	26	Muting
DOC Pulse Output	5	25	Color Amp Input
DOC Detect	6	24	Feedback Amp
RF Input (At Color)	7	23	Feedback Amp
Reference Voltage	8	22	Video Signal Input
RF Input (At B/W)	9	21	V_{CC}
Mix Amp Output	10	20	High Pass Limiter Output
Gate Amp Bias	11	19	High Pass Limiter
1H Delayed Signal Input	12	18	High Pass Limiter
Limiter	13	17	FM Demod
Limiter	14	16	FM Demod Output
GND	15		

See Diagrams, beginning on Page 1–252

Audio Power Amp, 5.7W, V_{CC} = 16V Max — **8–Lead SIP, See Diag. 235**

NTE1423 Front View

8	Inverting Input
7	Negative Feedback
6	Input
5	Offset Adjust
4	GND
3	Bootstrap
2	V_{CC}
1	Output

Audio Power Amp, 5.7W, V_{CC} = 16V Max — **8–Lead SIP, See Diag. 313**

NTE1424 Front View

1	Output
2	V_{CC}
3	Bootstrap
4	GND
5	Offset Adjust
6	Input
7	Negative Feedback
8	Inverting Output

Capstan Servo Control Circuit for VCR, V_{CC} = 12V Typ — **16–Lead DIP, See Diag. 248**

NTE1425

(+) V_{CC}	1	16	From Capstan Frequency Generator
SP:L/LP:H Switch	2	15	From Video Head Servo Control
Decouple V_{CC}	3	14	Decoupled/Switched Record V_{CC}
Equalization Network	4	13	PG Input
Bias Res (5.6kΩ)	5	12	Bypass Cap (0.33µf)
Bypass Cap (0.1 µf)	6	11	Bias Res (10kΩ)
S & H Output (Speed Control)	7	10	Bypass Cap (0.1µf)
GND	8	9	S & H Output (Speed Control)

Reference Frequency Divider for VCR, V_{CC} = 9V Typ — **7–Lead SIP, See Diag. 215**

NTE1427 Front View

7	V_{CC}
6	NTSC/PAL Select
5	Divide Output
4	GND
3	X'tal OSC
2	X'tal OSC
1	OSC Output

Cylinder Servo Control Circuit for VCR, V_{CC} = 12V Typ — **28–Lead DIP, See Diag. 253**

NTE1428

V_{CC}	1	28	Rec/P.B. Switch
From Capstan Servo Control	2	27	Control Track Duty Adjust
From Capstan Pulse Generator	3	26	Subcarrier Input
Head Bypass Cap (47µf)	4	25	V_{SS} Input
Control Haed Signal Input	5	24	PG Input Return
Control Head Signal Return	6	23	PG Input
GND	7	22	PG Shifter Adjust
S & H Speed Control	8	21	PG Shifter Adjust
Bypass Cap (0.1µf)	9	20	Head Switch Pulse Output
Bias Res (5.6kΩ)	10	19	Record Shifter Adjust
Bypass Cap (0.33µf)	11	18	To Capstan Servo Control
GND	12	17	Bias Res (10kΩ)
Decouple V_{CC}	13	16	Bypass Cap (0.1µf)
Drum Frequency Generator	14	15	S & H Output (Phase Control)

Vertical Output, B_1 = 110V, B_2 = 40V to 60V — **NTE1429** — **5–Lead TO220, See Diag. 205**

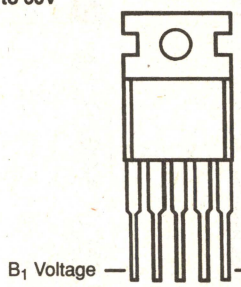

B_1 Voltage	Vertical Output
B_2 Voltage	Input
	GND

TV Video IF Amp, V_{CC} = 16V Max — **22–Lead DIP, See Diag. 337**

NTE1430

VIF Amp Input	1	22	RF AGC Control
VIF Amp Input	2	21	AGC Filter
GND	3	20	IF AGC Amp Input
RF AGC Output	4	19	IF AGC Control
RF AGC Output	5	18	VIF Output
AFT Switch	6	17	VIF Output
AFT Output	7	16	V_{CC}
AFT Coil	8	15	LLD Input
LLD Coil	9	14	Video Output
LLD Coil	10	13	SIF Output
AFT Coil	11	12	SIF Filter

See Diagrams, beginning on Page 1–252

Audio Driver, V_{CC} = 15V Max — **7–Lead SIP, See Diag. 217**

NTE1431 Front View

7	V_{CC}
6	Output
5	N.C.
4	GND
3	Bypass
2	Feedback
1	Input

FM Noise Canceller, V_{CC} = 18V Max — **14–Lead DIP, See Diag. 247**

NTE1432

Preamp Input	1	14	GND
Preamp Output	2	13	HPF Input
LPF Input	3	12	HPF Output
LPF Output	4	11	Input Sensitivity Control
RC Network	5	10	Noise Control
Signal Output	6	9	Interrupt Time Control
V_{CC}	7	8	Noise Control

Audio Preamp, V_{CC} = 42V Max — **7–Lead SIP, See Diag. 217**

NTE1433 Front View

7	V_{CC}
6	Output
5	Negative Feedback
4	GND
3	Positive Feedback
2	Input
1	Bias Comp

Voltage Comparator, V_{CC} = 20V Max — **5–Lead SIP, See Diag. 306**

NTE1434 Front View

5	GND
4	V_{CC}
3	Output
2	Non–Inverting Input
1	Inverting Input

Dual, Audio Preamp, V_{CC} = 18V — **9–Lead SIP, See Diag. 326**

NTE1435 Front View

9	Ch 2 Input
8	Feedback
7	Ch 2 Output
6	V_{CC}
5	GND
4	47µf Bypass Cap
3	Ch 1 Output
2	Feedback
1	Ch 1 Input

FM IF Amp, V_{CC} = 12V — **14–Lead DIP, See Diag. 247**

NTE1436

Input Bypass	1	14	IF Input
Input Bypass	2	13	GND
GND	3	12	Stereo/Mono Switch Output
Muting Control Input	4	11	Mute Driver Output
Demodulated Output	5	10	V_{CC}
AFC Output	6	9	Reference Voltage
IF Limiting Output	7	8	Quadrature Input

VIR Signal Processor, V_{CC} = 14.4V — **24–Lead DIP, See Diag. 252**

NTE1437

Y Signal Input Variable	1	24	Sync Input
Y Signal Input Fixed	2	23	RC Coupling Network
Ripple Filter	3	22	RC Coupling Network
To Color Prefer Control	4	21	GND
VIR Signal Presence Indicator	5	20	Color Control Output
Horizontal Blank Pulse Input	6	19	Ripple Filter
Vertical Blank Pulse Input	7	18	Manual Color Control
V_{CC}	8	17	V_{CC}
Tint Control Output	9	16	Ripple Filter
To Tint Prefer Control	10	15	B–Y Signal Input
Ripple Filter	11	14	Ripple Filter
Manual Tint Control	12	13	R–Y Signal Input

Audio Tape Program Selector, V_{CC} = 16V — **16–Lead SIP, See Diag. 325**

NTE1438 Front View

16	V_{CC}
15	Emitter Output
14	Collector Output
13	RC Network 2
12	Output A Attenuator 2
11	Control Input
10	Output A Attenuator 1
9	Muting
8	Noise Filter
7	RC Network 1
6	Limiter Amp Output
5	GND
4	Limiter Amp Input
3	Mixing Amp Output
2	Mixing Amp Input 2
1	Mixing Amp Input 1

See Diagrams, beginning on Page 1–252

Dual Attenuator, G_V = 17dB, V_{CC} = 16V Max — **14–Lead DIP, See Diag. 247**

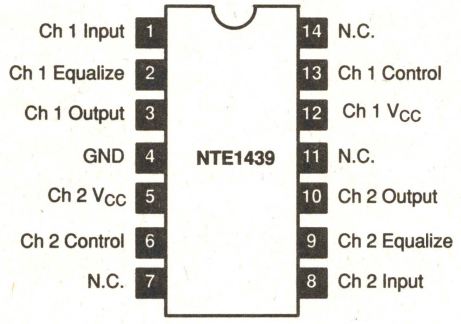

Video IF Amp, Detector, AGC, V_{CC} = 12V Typ — **28–Lead DIP, See Diag. 253**

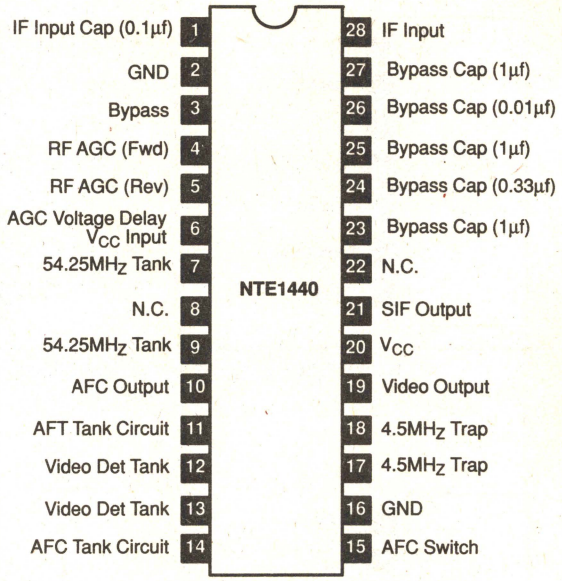

FM IF System, V_{CC} = 12V — **16–Lead DIP, See Diag. 248**

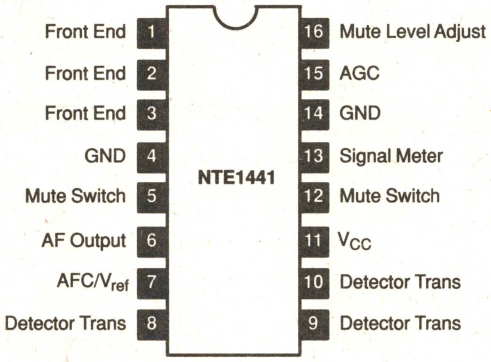

Balance Modulator, V_{CC} = 12V — **14–Lead DIP, See Diag. 247**

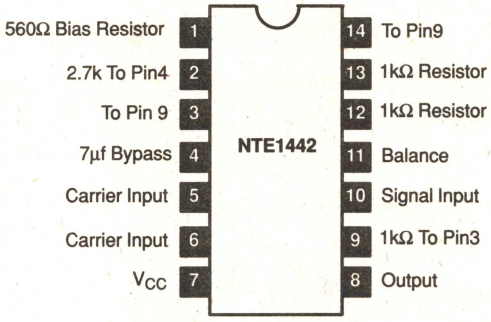

Sound IF Amp, V_{CC} = 12V — **14–Lead DIP, See Diag. 247**

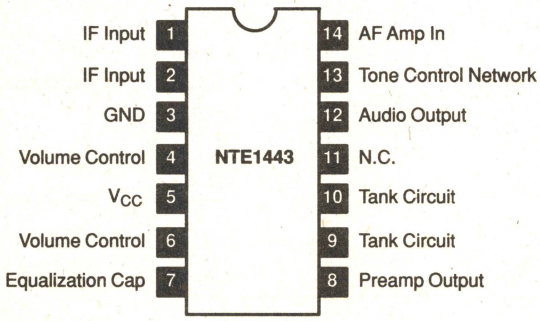

Servo Control for VCR, V_{CC} = 15.6V — **16–Lead DIP See Diag. 249**

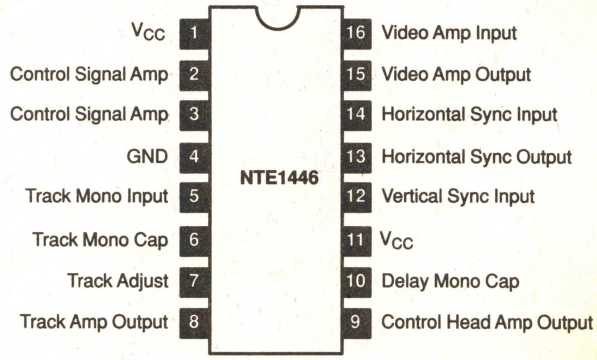

See Diagrams, beginning on Page 1–252

FM Noise Canceller, V_{CC} = 12V — **16–Lead DIP, See Diag. 248**

NTE1447

Input	1	16	GND
Low Pass Filter	2	15	High Pass Filter
Low Pass Filter	3	14	High Pass Filter
Input Low Pass Filter	4	13	RC Network
Memory	5	12	RC Network
Output	6	11	Noise Detector
19kHz Filter Output	7	10	RC Network
Pilot Signal	8	9	V_{CC}

FM IF Amp, V_{CC} = 12V — **9–Lead SIP, See Diag. 326**

NTE1448 Front View

9	0.1µf Bypass Cap
8	Output
7	GND
6	Tuner
5	V_{CC}
4	Tuner
3	Tuning Meter
2	0.1µf Bypass Cap
1	Input

Low Noise, Equalizer Amp, V_{CC} = 30V — **8–Lead SIP, See Diag. 328**

NTE1449 Front View

8	V_{CC}
7	Output
6	Bypass
5	GND
4	RC Network
3	Input
2	Feedback
1	Bias

Audio Power Amp, 5W, V_{CC} = 34V — **10–Lead DIP, See Diag. 327**

NTE1450

GND	1	10	Output
Equalization	2	9	V_{CC}
Equalization	3	8	Bias
GND	4	7	Feedback
Bypass	5	6	Input

2 Channel, Low Noise, Equalizer Amp, V_{CC} = 30V — **14–Lead DIP, See Diag. 247**

NTE1451

Bypass	1	14	Bypass
Ch 2 Input	2	13	Ch 1 Input
RC Network	3	12	RC Network
Bypass	4	11	Bypass
Ch 2 Output	5	10	Ch 1 Output
Feedback	6	9	Feedback
GND	7	8	V_{CC}

Audio Power Amp, 1W — **7–Lead SIP, See Diag. 215**

NTE1452 Front View

7	Bypass
6	$V_{CC}1$
5	Output
4	GND
3	Feedback
2	Input
1	$V_{CC}2$

2 Channel, Low Noise, Equalizer Amp, V_{CC} = 15V — **14–Lead DIP, See Diag. 247**

NTE1453

Bypass	1	14	Bypass
Lt Input	2	13	Rt Input
RC Network	3	12	RC Network
Bypass	4	11	Bypass
Lt Output	5	10	Rt Output
Feedback	6	9	Feedback
GND	7	8	V_{CC}

2 Channel, Low Noise, Equalizer Amp, V_{CC} = 20V — **14–Lead DIP, See Diag. 247**

NTE1455

Lt Ch Filter	1	14	Rt Ch Filter
Lt Ch Input	2	13	Rt Ch Input
Lt Ch Phase Compensation	3	12	Rt Ch Phase Compensation
Lt Ch Negative Feedback	4	11	Rt Ch Negative Feedback
Lt Ch Output	5	10	Rt Ch Output
Lt Ch Phase Compensation	6	9	Rt Ch Phase Compensation
GND	7	8	V_{CC}

Low Noise, Equalizer Amp, V_{CC} = 20V — **7–Lead SIP, See Diag. 215**

NTE1457 Front View

8	V_{CC}
7	Output
6	Bypass
5	GND
4	Equalization
3	Input
2	Feedback
1	Load Res

Dual, Audio Preamp, V_{CC} = 18V — **8–Lead SIP, See Diag. 224**

NTE1458 Front View

8	Input Amp 2
7	Feedback
6	Output Amp 2
5	GND
4	V_{CC}
3	Output Amp 1
2	Feedback
1	Input Amp 1

Low Noise, Equalizer Amp for Car, V_{CC} = 9V — **8–Lead SIP, See Diag. 328**

NTE1459 Front View

8	V_{CC}
7	Output
6	Bypass
5	GND
4	Equalization
3	Input
2	Feedback
1	Filter Capacitor

Stereo Demod w/PLL (Phase Lock Loop) — **16–Lead DIP, See Diag. 248**

NTE1460

V_{CC}	1	16	Stereo/Mono Sw VCO Stop
Preamp Input	2	15	VCO Input
Preamp Output	3	14	VCO Output
Demod Output	4	13	VCO Output
Demod Output	5	12	Det Input
Buffer Amp Out (1)	6	11	Det Output
Buffer Amp Out (2)	7	10	Det Output
GND	8	9	Stereo Lamp Driver

See Diagrams, beginning on Page 1–252

PLL (Phase Lock Loop) FM Stereo Demod — **16–Lead SIP, See Diag. 332**

NTE1461 Front View

16	OSC Constants
15	Ripple Filter
14	Ripple Filter
13	19kHz
12	Pilot Detector
11	Pilot Detector
10	Stereo Lamp
9	GND
8	Stereo Noise Control (SNC)
7	High Cut Control (HCC)
6	Rt Ch Output
5	Lt Ch Output
4	High Cut Constant
3	Separation Adjust
2	Composite Signal Input
1	V_{CC}

AF Power Amp for Tape Recorder — **14–Lead SIP, See Diag. 271**

NTE1463

AF Input	1	14	V_{CC}
N.C.	2	13	Feedback
GND	3	12	Filter
Feedback	4	11	N.C.
Feedback	5	10	Filter
Comp Network	6	9	AF Input
N.C.	7	8	N.C.

Audio Power Amp, 500mW, V_{CC} = 14V — **9–Lead SIP, See Diag. 329**

NTE1465 Front View

9	Ripple Cap (100µf)
8	Feedback
7	V_{CC}
6	Output
5	GND
4	High Freq Cap (100pf)
3	Non–Inverting Input
2	Inverting Input
1	High Freq Cap

Preamp w/ALC Transistors, V_{CC} = 15V — **9–Lead SIP, See Diag. 213**

NTE1466 Front View

9	V_{CC}
8	Output
7	Filter
6	ALC Output
5	GND
4	ALC Bias
3	Feedback
2	Input
1	Compensation

Audio Power Amp, 500mW, V_{CC} = 15V — **8–Lead SIP, See Diag. 224**

NTE1467 Front View

8	V_{CC}
7	Freq Resp Comp
6	Output
5	GND
4	Negative Feedback
3	Input
2	Hum Filter
1	Freq Resp Comp

Audio, Low Power Out Amp, V_{CC} = 25V — **7–Lead SIP, See Diag. 214**

NTE1468 Front View

7	Feedback
6	V_{CC}
5	Output
4	GND
3	Bypass
2	Bypass
1	Input

Video IF and AFT, V_{CC} = 15V — **24–Lead DIP, See Diag. 252**

NTE1469

Bypass	1	24	Video Output
Sound/Video Output	2	23	AGC Filter
Noise Cancel Input	3	22	Filter
Video Detector Adjust	4	21	V_{CC} (1)
Bypass	5	20	AFC Adjust
IF Input	6	19	Sync Detector Adjust
IF Input	7	18	Sync Detector Adjust
Bypass	8	17	AFC Adjust
V_{CC} (2)	9	16	AFC Output
RF AGC Output	10	15	V_{CC} (3)
GND	11	14	Sound Trap
AGC Delay Adjust	12	13	Sound Trap

Audio Power Amp, 2.5W, for Table Top Stereo, V_{CC} = 14V — **14–Lead DIP, See Diag. 271**

NTE1470

V_{CC}	1	14	Output
Decouple	2	13	N.C.
Bypass	3	12	GND
20pf Cap	4	11	DO NOT USE
20pf Cap	5	10	N.C.
Bias	6	9	Input
Feedback	7	8	N.C.

See Diagrams, beginning on Page 1–252

Sync Separator, Horizontal OSC/Driver, Vertical OSC/Driver, V_{CC} = 16V — **16 + 2–Lead DIP, See Diag. 315**

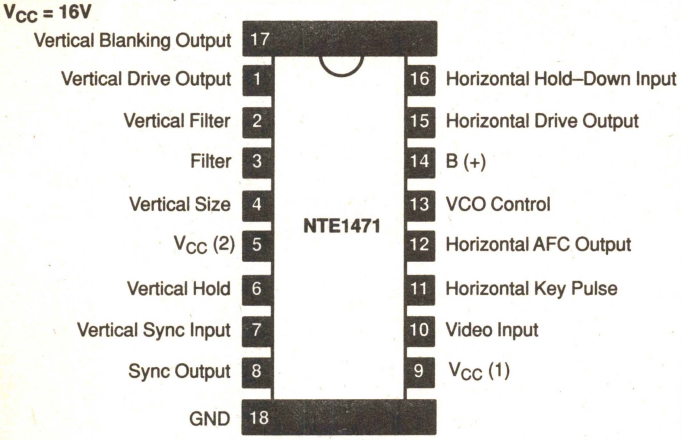

Audio Power Amp, 1W, for Tape Recorder, V_{CC} = 6V — **14–Lead DIP, See Diag. 271**

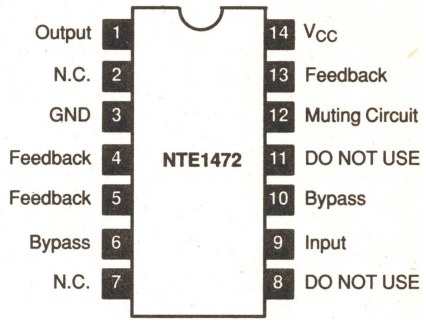

Color & Video Signal Processor, V_{CC} = 15V — **28–Lead DIP, See Diag. 253**

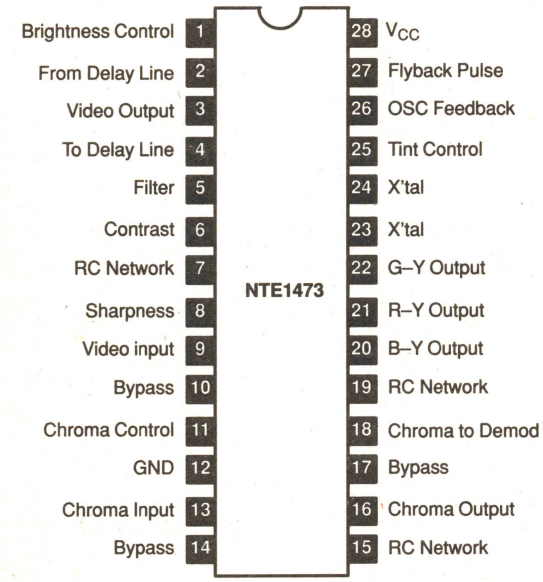

FM IF Amp, V_{CC} = 16V — **7–Lead SIP, See Diag. 214**

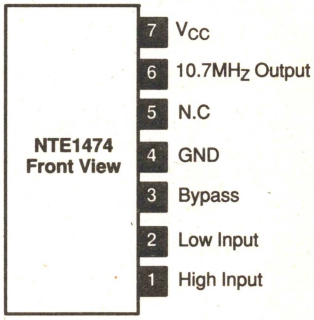

CMOS, PLL (Phase Lock Loop) Frequency Synthesizer for CB, V_{DD} = –0.3V to +8V — **20–Lead DIP, See Diag. 254**

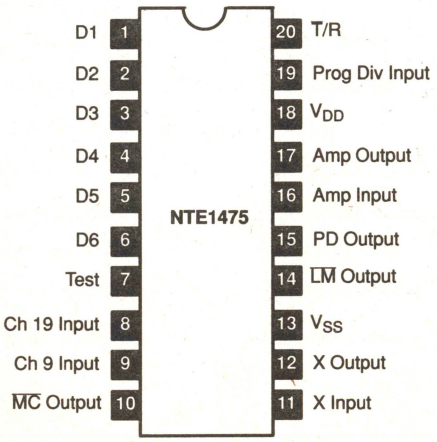

Audio Power Amp, 1.4W, V_{CC} = 14V — **10–Lead SIP, See Diag. 239**

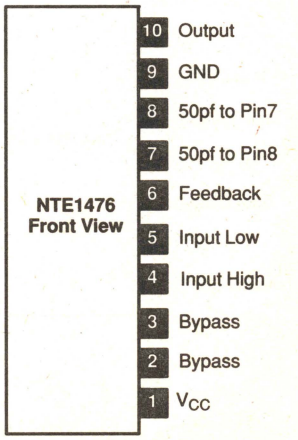

See Diagrams, beginning on Page 1–252

2 Channel Amp for Headphone — **14–Lead DIP, See Diag. 271**

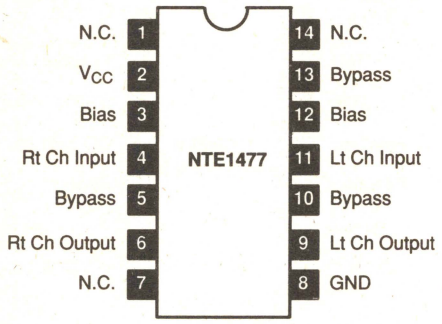

Solenoid Driver & Signal Sensing Circuit, V_{CC} = 18V — **10–Lead SIP, See Diag. 307**

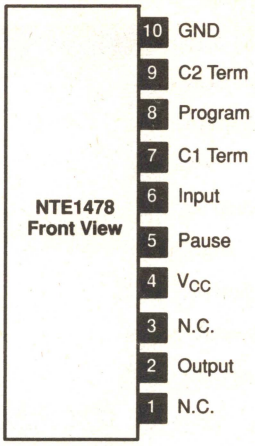

2 Channel Audio Preamp, V_{CC} = 30V — **14–Lead DIP, See Diag. 247**

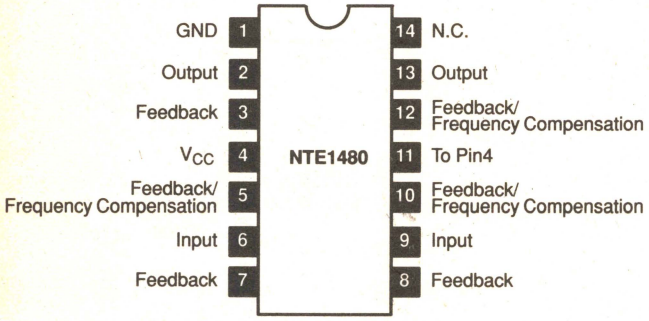

Dual Recording Output Amps, V_{CC} = 22V — **14–Lead DIP, See Diag. 271**

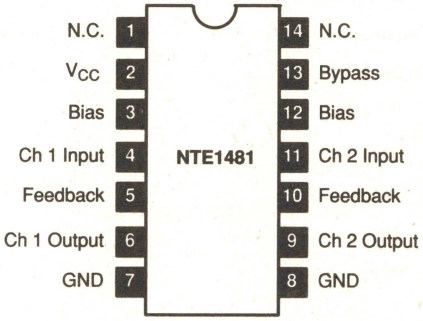

PLL (Phase Lock Loop) FM Stereo Demod w/Pilot Cancel, V_{CC} = 16V — **16–Lead DIP, See Diag. 249**

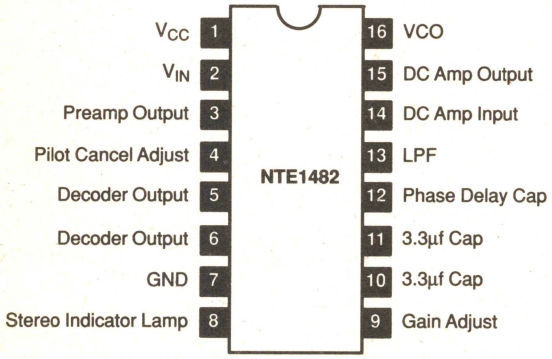

Video IF System, V_{CC} = 14V — **22–Lead DIP, See Diag. 337**

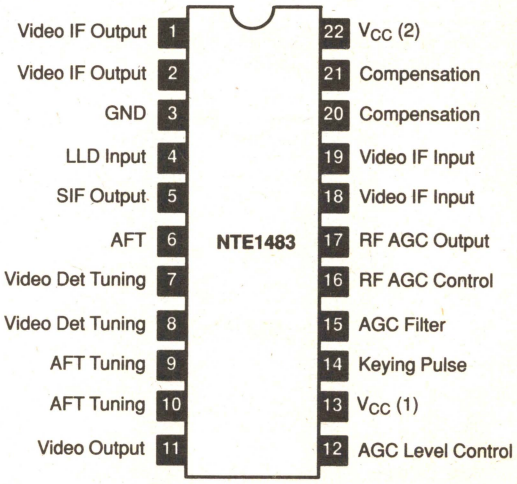

See Diagrams, beginning on Page 1–252

PLL (Phase Lock Loop) Stereo Demod, V_{CC} = 15V — **16–Lead DIP, See Diag. 248**

NTE1484

V_{CC}	1	16	Time Constant
Input	2	15	LPF
0.047µf to Pin13	3	14	LPF
Lt Output	4	13	0.047µf to Pin3
Rt Output	5	12	Stereo/Mono Switch
Feedback	6	11	LPF
Feedback	7	10	LPF
GND	8	9	Stereo Lamp

FM/AM Tuner System, V_{CC} = 13V — **16 + 2–Lead DIP, See Diag. 315**

NTE1486

Mute	17		
AM IF Amp Filter	1	16	Audio Output
AM IF Output	2	15	AFC Output
AM IF AGC Input	3	14	Limiter Output
AM IF Input	4	13	Quad Det Input
GND	5	12	Quad Det Output
FM Decouple	6	11	V_{CC}
AM/FM Switch	7	10	MPX Cont Output
FM IF Input	8	9	Tune Meter Output
GND	18		

FM IF Amp, Demod w/Muting, Center Meter and Signal Meter, V_{CC} = 14V — **16–Lead DIP, See Diag. 248**

NTE1488

Input	1	16	Mute Adjust
AM/FM Switch	2	15	RF AGC
Bypass	3	14	GND
GND	4	13	Meter Driver
Mute Input	5	12	Mute Output
Audio Output	6	11	V_{CC}
AFC Output	7	10	Det Tank
Quad Det	8	9	Det Tank

FM/AM Tuner for Portable Radio, V_{CC} = 8V — **16–Lead DIP, See Diag. 248**

NTE1490

IF Input (FM)	1	16	IF Input (AM)
AC GND (FM)	2	15	Ref Bias (AM)
DC Bias (FM)	3	14	AC GND (AM)
FM V_{CC}	4	13	IF Output (AM)
GND	5	12	AGC Input (AM)
Audio Output (AM)	6	11	V_{CC}
Det Input	7	10	FM Meter Output
IF Output (FM)	8	9	GND

Vertical Deflection Output Circuit, V_{CC} = 27.6V — **11–Lead SIP, See Diag. 222**

NTE1485 Front View

11	Output Stage Test Point
10	GND
9	To Vertical Deflection
8	To V_{CC}
7	Driver Stage Test Point
6	N.C.
5	Driver Input
4	Vertical OSC Pulse Input
3	AC Couple to Pin8
2	Vertical Blanking
1	V_{CC}

AM RF Converter, IF Amp, V_{CC} = 16V Max — **14–Lead DIP, See Diag. 247**

NTE1487

Mixer Output	1	14	Mixer Input
RF Amp Output	2	13	Local OSC
RF Input	3	12	V_{CC}
Bypass	4	11	Bypass
AGC Filter	5	10	Coupling
GND	6	9	IF Output
GND	7	8	IF Amp Input

Stereo Demodulator, V_{CC} = 15V — **16–Lead DIP, See Diag. 248**

NTE1489

V_{CC}	1	16	Stereo/Mono Switch & VCO Stop
Preamp Input	2	15	OSC RC Network
Preamp Output	3	14	Loop Filter
Postamp Bias	4	13	Loop Filter
Postamp Bias	5	12	Detector Input
Rt Ch Output	6	11	Switch Filter
Lt Ch Output	7	10	Switch Filter
GND	8	9	Stereo Lamp & 19kHz Monitor

AM RF/IF Amp, V_{CC} = 16V — **14–Lead DIP, See Diag. 247**

NTE1491

Mixer Output	1	14	V_{CC}
IF Input	2	13	OSC Output
Bypass	3	12	OSC Input
IF Output	4	11	Mixer Input
AGC Input	5	10	RF Output
Bypass	6	9	Bypass
GND	7	8	RF Input

See Diagrams, beginning on Page 1–252

TV Video IF Amp, V_{CC} = 15V — **16–Lead DIP, See Diag. 248**

NTE1492

IF Input	1	16	IF Input
DC Feedback	2	15	DC Feedback
RF AGC Output	3	14	Sync Sep Input
RF AGC Input	4	13	Sync Sep Output
AGC Det Output	5	12	V_{CC}
IF AGC Output	6	11	Video Out
GND	7	10	Reference Volatge
Carrier Filter	8	9	Carrier Filter

FM Stereo Demod, V_{CC} = 12V — **15–Lead SIP, See Diag. 330**

NTE1493 Front View

15	GND
14	Stereo Lamp
13	Rt Ch Output
12	Lt Ch Output
11	500Ω Potentiometer
10	Input
9	0.047µf to Pin5
8	V_{CC}
7	VCO
6	LPF
5	0.047µf to Pin5
4	LPF
3	19kHz Monitor
2	LPF
1	LPF

AM RF Mixer, IF Amp, V_{CC} = 16V — **15–Lead SIP, See Diag. 330**

NTE1495 Front View

15	IF Output
14	Bypass
13	AGC Input
12	IF Input
11	Mixer Input
10	Mixer Output
9	GND
8	GND
7	RF Output
6	Bypass
5	Bypass
4	RF Input
3	V_{CC}
2	OSC Input
1	OSC Output

Vertical/Horizontal OSC and X Ray Circuit, V_{CC} = 12V Typ — **16–Lead DIP, See Diag. 248**

NTE1496

AFC Out	1	16	Comp Video Input
Horizontal Hold Control	2	15	V_{CC} (Horizontal)
Shutdown	3	14	Sync Sep Output
Horizontal Drive Output	4	13	Vertical OSC
GND	5	12	Vertical Sync Input
Vertical Drive Output	6	11	V_{CC} (Vertical)
Vertical Phase Corr	7	10	Vertical Hold
Vertical Feedback	8	9	Ramp Capacitor

Audio Preamp w/ALC, V_{CC} = 15V — **7–Lead SIP, See Diag. 208**

NTE1497 Front View

7	V_{CC}
6	ALC Input
5	ALC Output
4	GND
3	Output
2	Feedback
1	Input

Dual Peak Power Meter Driver — **9–Lead SIP, See Diag. 213**

NTE1496 Front View

9	V_{CC}
8	Rt Ch Output
7	Rt Ch Hold
6	Rt Ch Input
5	V_{EE}
4	Lt Ch Input
3	Lt Ch Hold
2	Lt Ch Output
1	GND

1/20 Frequency Divider, V_{CC} = 7V Max. — **9–Lead SIP, See Diag. 213**

NTE1499 Front View

9	Output
8	V_{CC}
7	Input
6	N.C.
5	GND
4	Filter 1.5nf
3	Filter 1.5nf
2	Filter 1.5nf
1	GND

See Diagrams, beginning on Page 1–252

7–Step LED Driver Circuit for Logarithmic Response, V_{CC} = 18V — **16–Lead DIP, See Diag. 348**

NTE1500

Out	1	16	V_{CC}
Input (–)	2	15	LED7
Input (+)	3	14	LED6
1 Cont	4	13	LED5
1 Cont	5	12	LED4
V_{ref}	6	11	LED3
R2	7	10	LED2
R1	8	9	LED1
GND	17		

7–Step LED Driver Circuit for Linear Response, V_{CC} = 18V — **16–Lead DIP, See Diag. 348**

NTE1501

Out	1	16	V_{CC}
Input (–)	2	15	LED7
Input (+)	3	14	LED6
1 Cont	4	13	LED5
1 Cont	5	12	LED4
V_{ref}	6	11	LED3
R2	7	10	LED2
R1	8	9	LED1
GND	17		

5–Step LED Driver Circuit for Linear Response, V_{CC} = –0.5V to +18V — **9–Lead SIP, See Diag. 326**

NTE1502 Front View

9	V_{CC}
8	Input
7	Output Current Adjust
6	LED5
5	GND
4	LED4
3	LED3
2	LED2
1	LED1

5–Step LED Driver Circuit for Logarithmic Response, V_{CC} = –0.5V to +18V — **9–Lead SIP, See Diag. 326**

NTE1503 Front View

9	V_{CC}
8	Input
7	Output Current Adjust
6	LED5
5	GND
4	LED4
3	LED3
2	LED2
1	LED1

10–Step Dot/Bar Display Driver for Linear Scale, V_{CC} = 25V Max — **18–Lead DIP, See Diag. 287**

NTE1508

LED1	1	18	LED2
V (–)	2	17	LED3
V (+)	3	16	LED4
Divider Low	4	15	LED5
Signal Input	5	14	LED6
Divider High	6	13	LED7
Reference Output	7	12	LED8
Reference Adjust	8	11	LED9
Mode	9	10	LED10

10–Step Dot/Bar Display Driver for Logarithmic Scale, V_{CC} = 25V Max — **18–Lead DIP, See Diag. 287**

NTE1509

LED1	1	18	LED2
V (–)	2	17	LED3
V (+)	3	16	LED4
Divider Low	4	15	LED5
Signal Input	5	14	LED6
Divider High	6	13	LED7
Reference Output	7	12	LED8
Reference Adjust	8	11	LED9
Mode	9	10	LED10

5–Step LED Driver Circuit for Linear Scale, V_{CC} = 18V Max — **8–Lead SIP, See Diag. 224**

NTE1510 Front View

8	LED3
7	LED2
6	LED1
5	V_{CC}
4	Input
3	GND
2	LED5
1	LED4

5–Step LED Driver Circuit for Linear Scale, V_{CC} = 16V Max — **14–Lead DIP, See Diag. 271**

NTE1511

Input (–)	1	14	R_L Output
Input (+) 1	2	13	LED5
Input (+) 2	3	12	LED4
R_{O2}	4	11	LED3
V_{ref}	5	10	LED2
R_{O1}	6	9	LED1
GND	7	8	V_{CC}

See Diagrams, beginning on Page 1–252

5–Step LED Driver Circuit for Logarithmic Scale, V_{CC} = 16V Max — **14–Lead DIP, See Diag. 271**

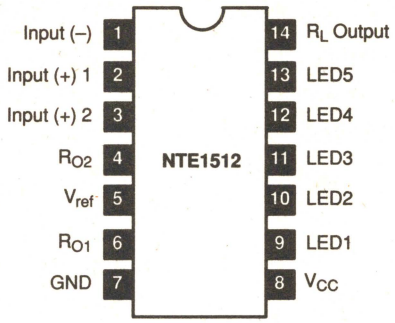

9–Step LED Driver Circuit for Logarithmic Scale, V_{CC} = 18V Max — **16–Lead DIP, See Diag. 248**

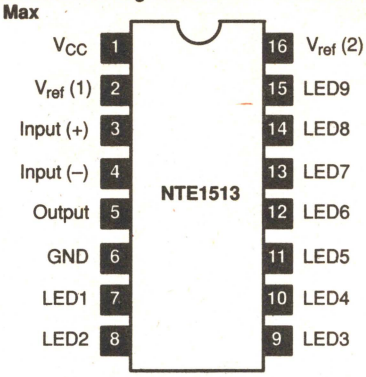

5–Step LED Driver Circuit for Logarithmic Scale, V_{CC} = 12V Max — **16–Lead DIP, See Diag. 248**

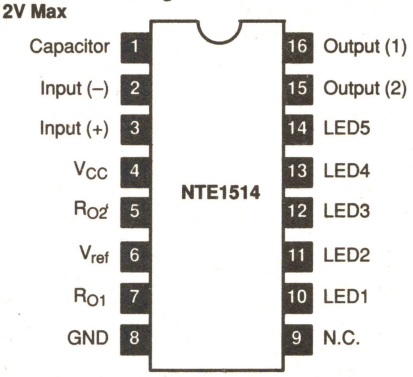

5–Step LED Driver Circuit for Logarithmic Scale, V_{CC} = 12V Max — **16–Lead DIP, See Diag. 248**

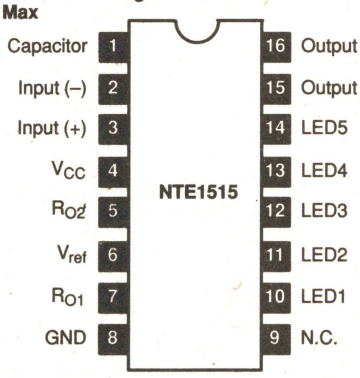

Audio Power Amp, 1.8W, V_{CC} = 11V Max — **8–Lead DIP, See Diag. 316**

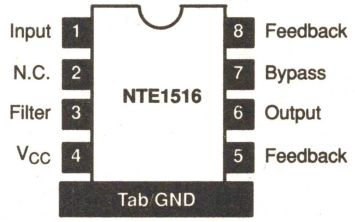

Dual Audio Preamp w/ALC — **10–Lead SIP, See Diag. 331**

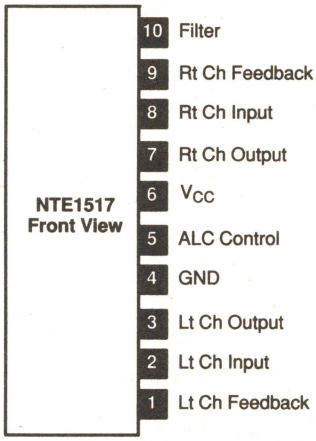

AM RF/IF Detector, AGC, V_{CC} = 18V Max — **19–Lead SIP, See Diag. 384**

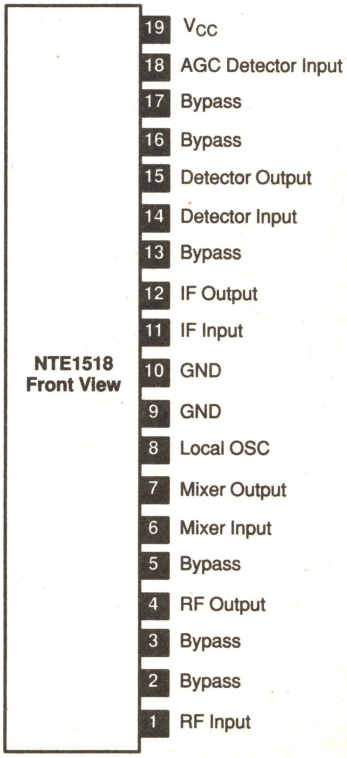

See Diagrams, beginning on Page 1–252

10–Step LED Driver Circuit for Linear Scale, V_{CC} = 12V Typ — **16–Lead DIP, See Diag. 248**

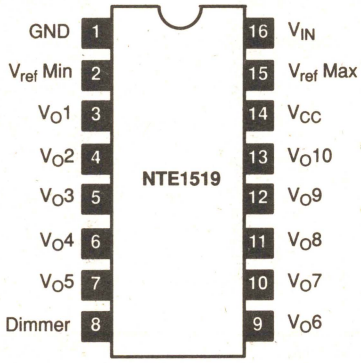

Electronic Channel Selector, V_{CC} = 8V — **24–Lead DIP, See Diag. 252**

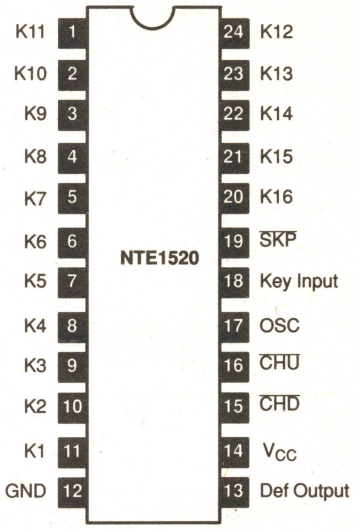

TV Sound IF Amp & Detector, V_{CC} = 8V Max — **9–Lead SIP, See Diag. 213**

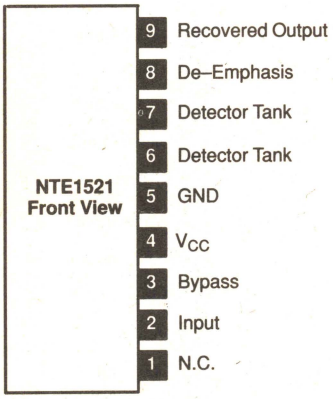

B/W Video IF, V_{CC} = 15V — **14–Lead DIP, See Diag. 269**

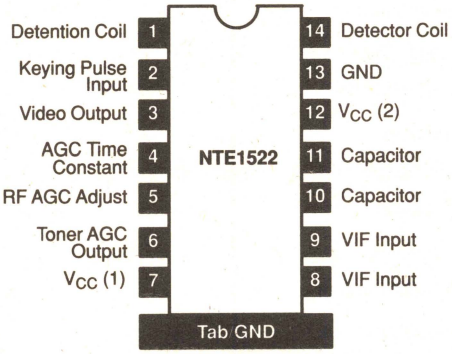

Dual, Low Noise Preamp, V_{CC} = 15V — **9–Lead SIP, See Diag. 213**

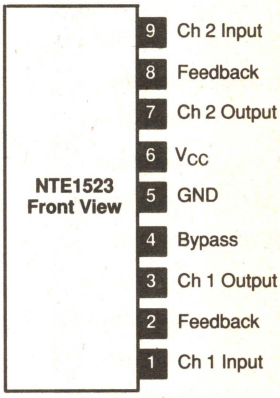

3–Stage Differential IF Amp, V_{CC} = 15V — **9–Lead SIP, See Diag. 213**

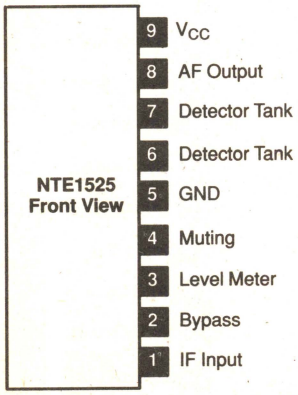

FM, IF Amp/AFC & Meter Driver — **16 + 2–Lead DIP, See Diag. 315**

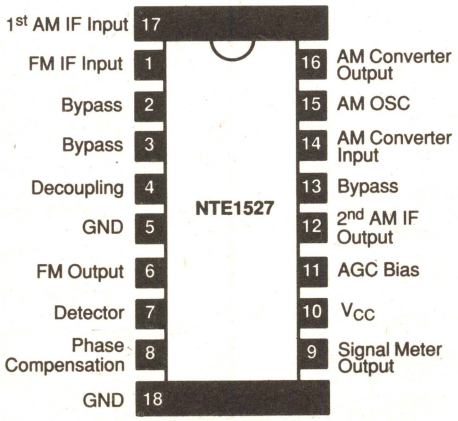

Dual OP Amp — **9–Lead SIP, See Diag. 213**

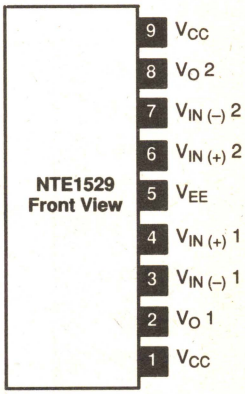

See Diagrams, beginning on Page 1–252

Audio Power Amp, 450mW w/ALC, V_{CC} = 12V — **14–Lead DIP, See Diag. 317**

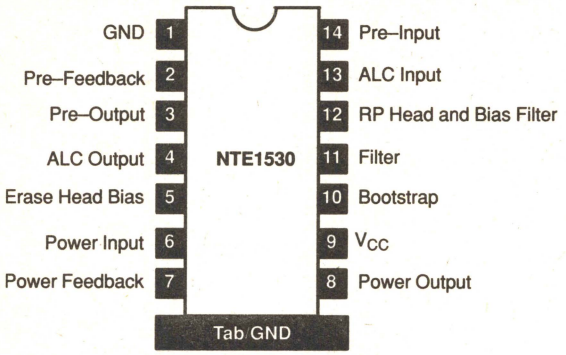

Voltage Regulator for Electronic Tuning System, B_1 = 21V, B_2 = 21V — **14–Lead DIP, See Diag. 271**

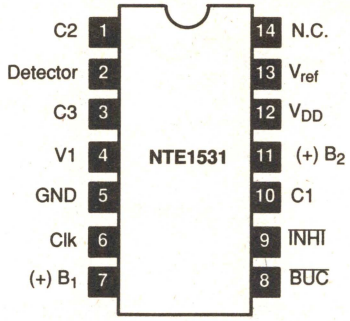

TV Chroma Amp — **28–Lead DIP, See Diag. 253**

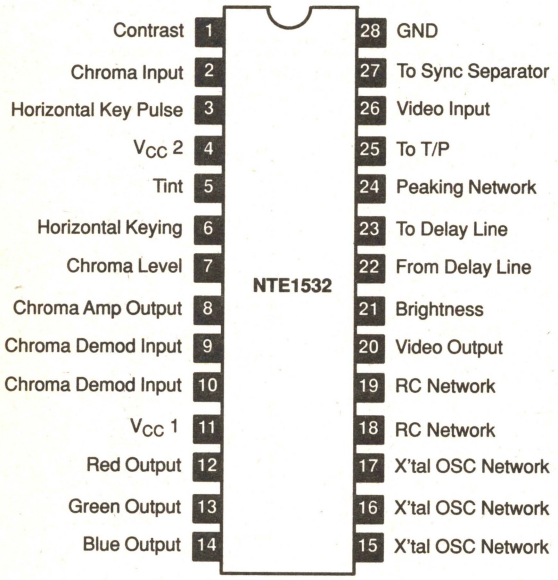

AM Tuner System for Car Radio — **16–Lead SIP, See Diag. 332**

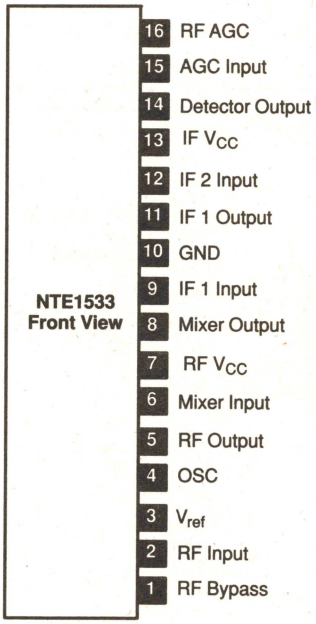

CMOS, PLL (Phase Lock Loop) Frequency Synthesizer for AM/FM Radio, V_{DD} = –0.3V to +9V — **16–Lead DIP, See Diag. 248**

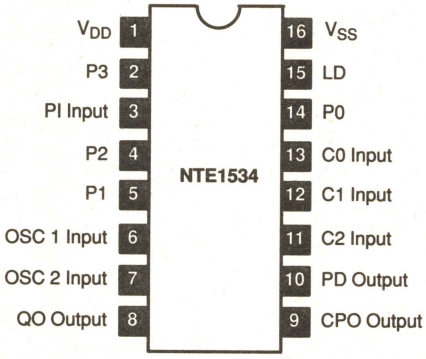

TV Sync Horizontal/Vertical OSC, V_{CC} = 14V — **24–Lead DIP, See Diag. 252**

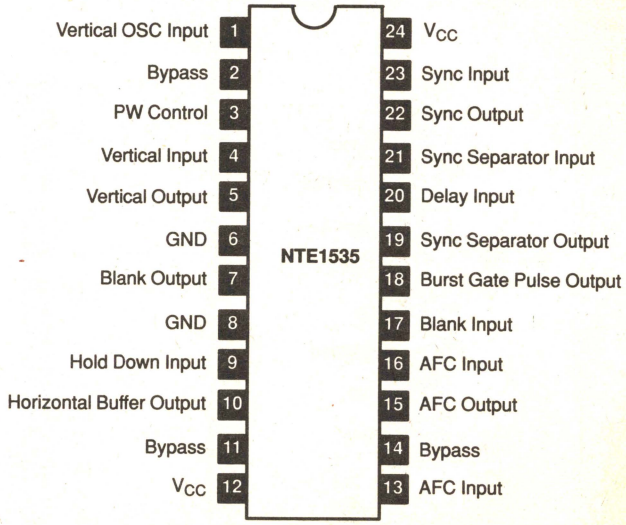

See Diagrams, beginning on Page 1–252

CMOS, CB PLL (Phase Lock Loop) Synthesizer, V_{DD} = –0.3V to +9V — **20–Lead DIP, See Diag. 254**

NTE1536

LSB–D1	1	20	V_{SS}
D2	2	19	A Output
D3	3	18	A Input
D4	4	17	PD Output
D5	5	16	$\overline{LM}$
MSB–D6	6	15	LM
GND	7	14	PC Input
T/R	8	13	1/2 R Output
V_{DD}	9	12	R Output
X Input	10	11	X Output

TV Horizontal/Vertical OSC Driver, V_{CC} = 12V Typ — **16–Lead DIP, See Diag. 248**

NTE1538

AFC Output	1	16	AFC Input
Horizontal OSC Input	2	15	V_{CC} (115V)
Horizontal OSC Output	3	14	Sync Separator Input
X–Ray Protect	4	13	Sync Separator Output
GND	5	12	V_{CC}
Vertical Output	6	11	Vertical OSC Input
Vertical Driver Input	7	10	Vertical OSC Input
Vertical Driver Input	8	9	Vertical Blank Output

Color TV Sync Deflection Circuit, V_{CC} = 12V Typ — **18–Lead DIP, See Diag. 287**

NTE1539

AFC Output	1	18	Flyback Input
Horizontal Hold	2	17	V_{CC} (115V)
Horizontal OSC Output	3	16	Video Input
GND	4	15	Sync Separator Output
X–Ray Protect	5	14	V_{CC}
X–Ray Protect	6	13	Vertical Blank Output
GND	7	12	Vertical Sync Input
Vertical Driver Output	8	11	Vertical Hold
Vertical Height	9	10	Vertical Feedback

FM IF Amp and Detector for Auto, V_{CC} = 12V — **7–Lead SIP, See Diag. 333**

NTE1541 Front View

7	Demod Output
6	Detector Tank
5	Detector Tank
4	GND
3	V_{CC}
2	Bypass
1	IF Input

CMOS, Digital Frequency Indicator w/Clock LED Functions, V_{DD} = –0.3V to +1V — **42–Lead DIP, See Diag. 335**

NTE1537

$\overline{\text{Seg–d}}$ Digit 4	1	42	$\overline{\text{Seg–e}}$ Digit 4
$\overline{\text{Seg–c}}$ Digit 4	2	41	$\overline{\text{Seg–f}}$ Digit 4
$\overline{\text{Seg–g}}$ Digit 4	3	40	$\overline{\text{Seg–a}}$ Digit 4
$\overline{\text{Seg–b}}$ Digit 4	4	39	$\overline{\text{Seg–b}}$ Digit 3
FIN – FM	5	38	$\overline{\text{Seg–g}}$ Digit 3
FIN – AM	6	37	$\overline{\text{Seg–c}}$ Digit 3
IF – FM	7	36	V_{SS}
IF – AM 2	8	35	$\overline{\text{Seg–d}}$ Digit 3
V_{ref}	9	34	$\overline{\text{Seg–e}}$ Digit 3
IF – AM 1	10	33	$\overline{\text{Seg–f}}$ Digit 3
FM/AM	11	32	$\overline{\text{Seg–a}}$ Digit 3
FM – Fine	12	31	$\overline{\text{Seg–b}}$ Digit 2
AM – Fine	13	30	$\overline{\text{Seg–g}}$ Digit 2
CTL/CLD	14	29	$\overline{\text{Seg–c}}$ Digit 2
SET	15	28	$\overline{\text{Seg–d}}$ Digit 2
Demand	16	27	$\overline{\text{Seg–e}}$ Digit 2
$\overline{\text{INHI}}$	17	26	$\overline{\text{Seg–f}}$ Digit 2
12/24 H	18	25	$\overline{\text{Seg–a}}$ Digit 2
OSC Output	19	24	$\overline{\text{Seg–b}}$ Digit 1
OSC Input	20	23	$\overline{\text{Seg–c}}$ Digit 1
V_{DD}	21	22	$\overline{\text{Seg–PM}}$ Digit 1

B/W TV Sync Deflection Circuit, V_{CC} = 14V — **16–Lead DIP, See Diag. 248**

NTE1540

AFC Output	1	16	Flyback Input
Horizontal Hold	2	15	V_{CC} (115V)
Horizontal OSC Output	3	14	Video Input
GND	4	13	Sync Separator Output
GND	5	12	V_{CC}
Vertical Driver Output	6	11	Vertical Sync Input
Vertical Driver Input	7	10	Vertical Hold
Vertical Driver Input	8	9	Vertical Blank Output

Color TV Video IF System, V_{CC} = 12V — **16–Lead DIP, See Diag. 249**

NTE1542

VIF Input	1	16	VIF Input
Feedback	2	15	Feedback
GND	3	14	AGC Filter
RF AGC Output	4	13	GND
AGT Output	5	12	Multiplex Output
AGC Filter	6	11	V_{CC}
GND	7	10	GND
LLD	8	9	LLD

See Diagrams, beginning on Page 1–252

FM Noise Suppressor, V_{CC} = 16V — **16–Lead DIP, See Diag. 248**

NTE1543

Input	1	16	HPF
LPF	2	15	N.C.
LPF	3	14	HPF
LPF	4	13	Bypass
Storage	5	12	Cut–Off Circuit
Output	6	11	One Shot Multi
0.01µf Capacitor	7	10	Pulse Duration Circuit
0.01µf Capacitor	8	9	V_{CC}

TV Sync Proc w/X–Ray Protect, V_{CC} = 15V — **16–Lead DIP, See Diag. 248**

NTE1544

Vertical Drive Feedback	1	16	Horizontal Sync Input
Vertical Output	2	15	Horizontal Phase Detector Output
Vertical Size	3	14	Horizontal Feedback
Vertical Yoke Feedback	4	13	Horizontal Switch
Filter	5	12	Horizontal Hold
V_{CC}	6	11	Internal Regulator
Vertical Hold	7	10	Horizontal Output
Vertical Sync Input	8	9	GND

Video IF, AGC Amp, V_{CC} = 15V — **16–Lead DIP, See Diag. 248**

NTE1545

IF Input	1	16	IF Input
Bypass	2	15	Bypass
RF AGC Delay	3	14	IF AGC Filter
RF AGC Output	4	13	GND
AFT Output 1	5	12	Video Out
AFT Output 2	6	11	V_{CC}
AFT Tank	7	10	AFT Tank
Video Tank	8	9	Video Tank

Hybrid, TV Voltage Regulator, V_{IN} = 200V Max, V_O = 130V ±1V, I_O = 1A — **TO3, See Diag. 419**

NTE1546
Bottom View

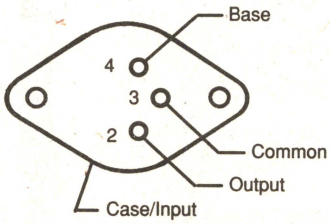

Video Chroma, Demod, Horizontal, Vertical OSC Driver, V_{CC} = 12V — **42–Lead DIP, See Diag. 335**

NTE1547

Color Control	1	42	C–Contrast Output
E–Contrast Output	2	41	Brightness Control
V_{CC}	3	40	Clamp Input
Delay Input	4	39	Horizontal Sync Separator
Contrast Control	5	38	Vertical Sync Separator
Video Inv Input	6	37	Sync Output
Video Inv Output	7	36	Horizontal OSC Discharge
Hue Control	8	35	AFC
Chroma Input	9	34	Horizontal OSC Timing
ACC Filter	10	33	Horizontal V_{CC} (8V)
GND	11	32	GND
Chroma Output	12	31	Vertical Sync Input
Killer Filter	13	30	Timing
Demod Input	14	29	Height Control
APC Filter	15	28	Ramp Capacitor
X'tal Drive	16	27	NFB Input
X'tal Input	17	26	Vertical Drive Output
–π/4 Input	18	25	Phase Compensation
B–Y Output	19	24	Horizontal Drive Output
G–Y Output	20	23	X–Ray Protect
R–Y Output	21	22	Y Output

Hybrid, TV Voltage Regulator, V_{IN} = 200V Max, V_O = 123V ±1V, I_O = 1A — **TO3, See Diag. 419**

NTE1548
Bottom View

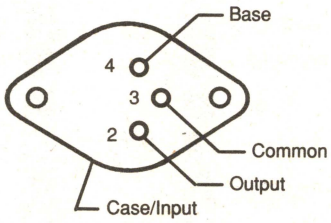

Voltage Level Indicator, V_{CC} = 25V — **18–Lead DIP, See Diag. 287**

NTE1549

LED1	1	18	LED2
V (–)	2	17	LED3
V (+)	3	16	LED4
Divider (Low End)	4	15	LED5
Signal	5	14	LED6
Divider (High End)	6	13	LED7
Reference Output	7	12	LED8
Reference Adjust	8	11	LED9
Mode Select	9	10	LED10

See Diagrams, beginning on Page 1–252

TV Sync Signal Processor, V_{CC} = 16V — **16 + 2–Lead DIP, See Diag. 315**

NTE1550

Sync Separator Feedback	17		
Vertical Compensation	1	16	Vertical Sync/Video Output
Vertical Drive Output	2	15	Video Input
Vertical Feedback	3	14	Phase Detector Output
Vertical Size	4	13	Flyback Pulse
Vertical Filter	5	12	Horizontal Hold
Vertical V_{CC}	6	11	Horizontal V_{CC}
Vertical Sync Input	7	10	Horizontal Output
Vertical Hold	8	9	Hold Down
GND	18		

TV Video IF Amp, V_{CC} = 12V Typ — **16–Lead DIP, See Diag. 348**

NTE1551

IF Input	1	16	IF Input
IF Feedback	2	15	IF Feedback
RF AGC Delay	3	14	IF AGC
AGC (Fwd)	4	13	IF AGC
AGC (Rev)	5	12	Video Amp Output
AFC Output	6	11	V_{CC}
AGC Detector Network	7	10	AFC Detector Network
Carrier Amp	8	9	Carrier Amp

3–Phase Direct Drive Motor Driver, V_{CC} = 20V — **12–Lead DIP, See Diag. 262**

NTE1554

Feedback	1	12	V
V2	2	11	W
V1	3	10	U
GND	4	9	V_{CC}
W2	5	8	U1
W1	6	7	U2

VIR Signal Processor for Color TV, V_{CC} = 15V Max — **16–Lead DIP, See Diag. 248**

NTE1556

V_{CC} 2	1	16	Composite Sync
Flyback Pulse Input	2	15	V_{CC} 1
R–Y Input	3	14	Color Control Output
Auto Tint Input	4	13	Manual Color
Tint Fine Adjust Output	5	12	B–Y Input
Tint Control Voltage Output	6	11	Y Input
Composite Video	7	10	VIR Indicator
GND	8	9	RC Filter

FM/AM IF System, V_{CC} = 16V — **16–Lead DIP, See Diag. 249**

NTE1557

1st IF Amp Input (FM)	1	16	1st IF Amp Input (AM)
1st IF Decouple (FM)	2	15	AGC Decouple
V_{CC} (FM)	3	14	2nd IF Amp Input (AM)
1st IF Amp Output (FM)	4	13	GND
GND	5	12	Detector Output
2nd IF Amp Input (FM)	6	11	V_{CC}
Voltage Regulator	7	10	Center Meter
Phase Shifter (FM)	8	9	FM Output

Switchless Rec/PB Amp for VCR, V_{CC} = 15V Max — **18–Lead DIP, See Diag. 287**

NTE1558

Pre–Bypass	1	18	MIC Input
PB Input	2	17	ALC Output
PB NFB	3	16	ALC Input
Pre–Output	4	15	V_{CC}
GND	5	14	P/R Cont Input
Filter	6	13	Rec Output
Line NFB	7	12	Rec Input
Line Input	8	11	Rec NFB
Line Input	9	10	Line Output

FM IF Amp, Demod — **16–Lead DIP, See Diag. 248**

NTE1559

1st IF Input	1	16	Level Control
2nd IF Input	2	15	Center Meter
3rd IF Input	3	14	GND
GND	4	13	Signal Motor Drive
Mute Control	5	12	Mute Switch
Audio Amp Output	6	11	V_{CC}
AFC Amp Output	7	10	Quadrature Tank
Quadrature Tank	8	9	Quadrature Tank

PLL (Phase Lock Loop) FM Stereo Multiplex Demod, V_{CC} = 12V Max — **16–Lead DIP, See Diag. 249**

NTE1560

V_{CC}	1	16	Frequency Adjust
Amp Input	2	15	LP Filter
Amp Output	3	14	LP Filter
Lt Ch Output	4	13	Detect Input
Rt Ch Output	5	12	f Check (19kHz)
LED	6	11	LP Filter
GND	7	10	LP Filter
Separation	8	9	VCO Killer

See Diagrams, beginning on Page 1–252

5–LED VU Level Meter, V_{CC} = 16V Max — **9–Lead SIP, See Diag. 223**

NTE1561 Front View

9	V_{CC}
8	Input
7	Amp Output
6	D5
5	GND
4	D4
3	D3
2	D2
1	D1

Programmable Search System for Audio Cassette, V_{CC} = 14V Max — **16–Lead DIP, See Diag. 248**

NTE1562

Input	1	16	Reset
Bias	2	15	Set
Mute	3	14	LED1
Filter	4	13	LED2
Start	5	12	LED3
GND	6	11	N.C.
Pulse	7	10	GND
Output	8	9	V_{CC}

AM Tuner, AM/FM IF Amp, V_{CC} = 9V — **16–Lead DIP, See Diag. 248**

NTE1563

AM Local OSC	1	16	AM Con Input
FM IF Input (1)	2	15	AM Con Output
GND (1)	3	14	AM IF Input
FM IF Output (1)	4	13	AM AGC Input
FM IF Input (2)	5	12	+ B2
+ B1	6	11	AM IF Output
FM IF Output (2)	7	10	AM Bypass
FM Bypass	8	9	GND (2)

PLL (Phase Lock Loop) FM Demod for Portable Car Radio, V_{CC} = 9V — **16–Lead DIP, See Diag. 248**

NTE1565

B+	1	16	DC Amp
V_{IN}	2	15	RC Network
0.047µf Capacitor	3	14	RC Network
Decoder	4	13	0.047µf Capacitor
Decoder	5	12	19kHz Monitor
Stereo Indicator Lamp	6	11	Coupling Capacitor
GND	7	10	Coupling Capacitor
Decoder Adjust	8	9	IF Level Detect Input

Audio Power Output, 4.5W, V_{CC} = 35V Max — **9–Lead SIP, See Diag. 507**

NTE1566 Front View

9	Compensation
8	Bypass
7	Input
6	GND
5	Compensation
4	GND
3	N.C.
2	Output
1	V_{CC}

Vertical Deflection Output Circuit, V_{CC} = 50V Max — **9–Lead SIP, See Diag. 506**

NTE1567 Front View

9	V_{CC}
8	Flyback Input
7	Blank Output
6	Output V_{CC}
5	Output
4	Output (GND)
3	Switching Circuit Input
2	GND
1	Driver Input

Frequency Divider/Generator for VCR, V_{CC} = 13V — **16–Lead DIP, See Diag. 249**

NTE1568

Schmitt Trigger Input	1	16	FG Amp Output
GND	2	15	Bias
Divide–by–9–Input	3	14	Capstan FG input
Divide–by–2–Input	4	13	V_{CC}
FG Output	5	12	Reset
Divide Select	6	11	Divide–by–2 Input
2/4/6 Select	7	10	NTSC/PAL Select
2/4/6 Select	8	9	PG Output

Video Amp/Blanker/Black Control, V_{CC} = ±18V — **7–Lead SIP, See Diag. 220**

NTE1569 Front View

7	V_{CC}
6	Black Level Shifter Output
5	Bypass Capacitor
4	GND
3	Detector Bias
2	Y Input
1	HV Blanking

See Diagrams, beginning on Page 1–252

TV Video IF/Sound, IF/Audio Driver for Transistor NPN Tuner, V_{CC} = 15V — **24–Lead DIP, See Diag. 252**

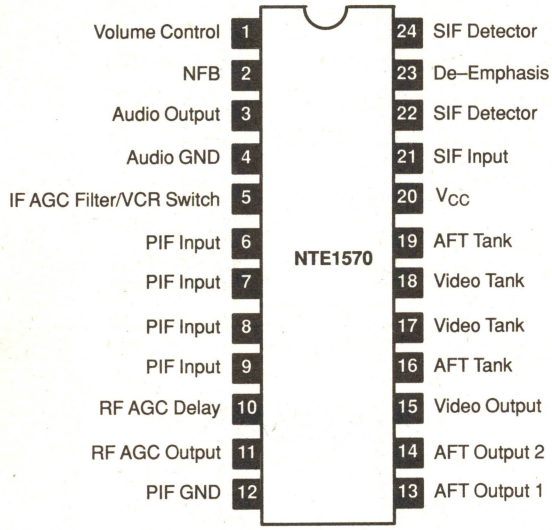

TV Video IF/Sound, IF/Audio Driver for FET Tuner, V_{CC} = 15V — **24–Lead DIP, See Diag. 252**

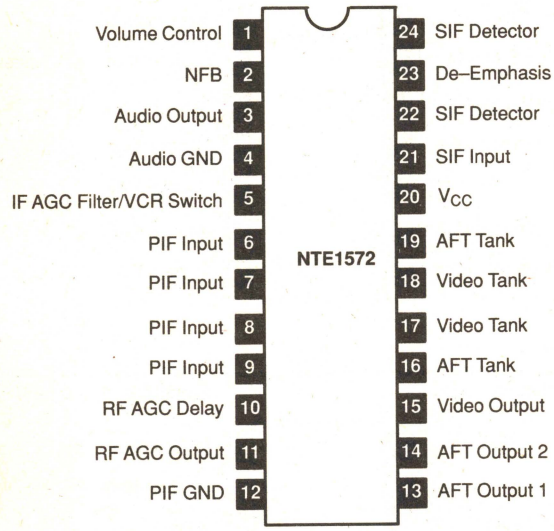

Dual, Low Noise, Preamp w/Auto Reverse, V_{CC} = 36V Max — **16–Lead DIP, See Diag. 248**

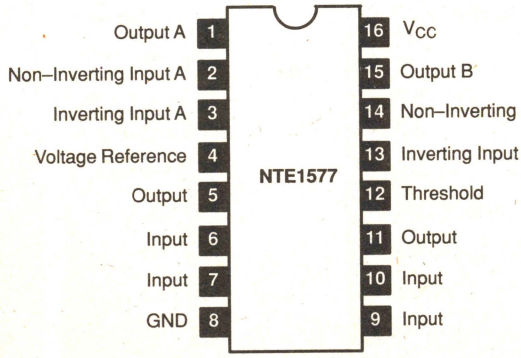

Dual Preamp for Tape Recorder, V_{CC} = 16V — **14–Lead DIP, See Diag. 247**

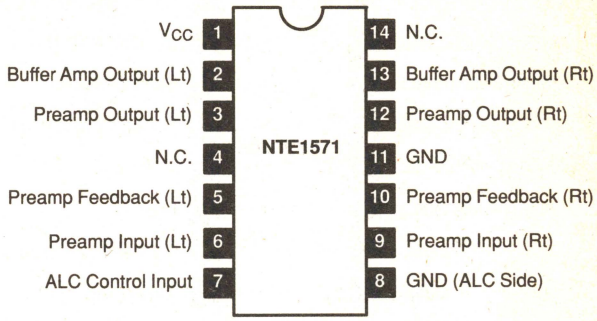

B/W TV Sound IF Amp, V_{CC} = 8V — **14–Lead DIP, See Diag. 247**

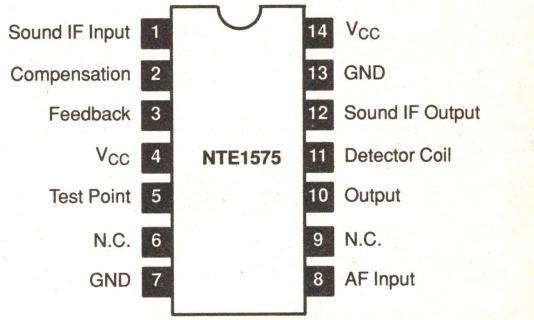

Dual Volume Control/Balance/Tone, V_{CC} = 14V — **16–Lead DIP, See Diag. 248**

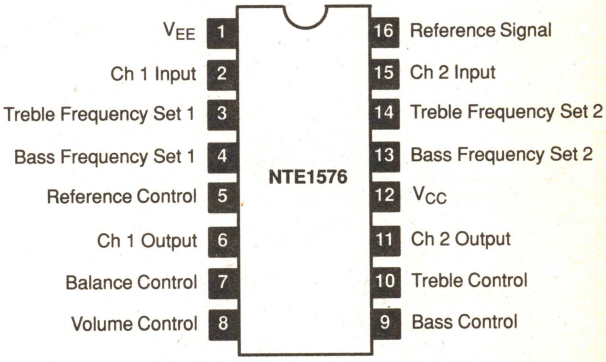

FM Mixer/IF Amp, V_{CC} = 8V — **16–Lead DIP, See Diag. 248**

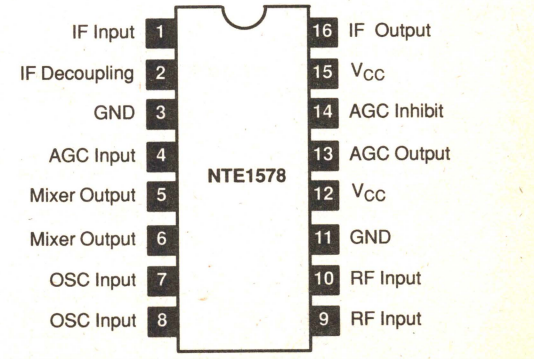

See Diagrams, beginning on Page 1–252

FM–IF Amp/Demod, V_{CC} = 16V — **16–Lead DIP, See Diag. 248**

NTE1579

IF Input	1	16	Substrate GND
AM FM Switch Circuit	2	15	Delayed AGC
AM FM Switch Circuit	3	14	Substrate GND
Substrate GND	4	13	Tuning Meter Circuit
Muting Switch Circuit	5	12	To MPX IC
Audio Output	6	11	V_{CC}
AFC Output	7	10	DC Reference Bias
IF Output	8	9	Quadrature Input

IF Amp and Detector, V_{CC} = 12V Typ — **14–Lead DIP, See Diag. 247**

NTE1580

GND	1	14	IF Input
Bias Decoupling	2	13	IF Input Bias
Recorder Audio Input	3	12	Constant Level Audio Out
Volume Control Bias	4	11	V_{CC}
Volume Control	5	10	IF Amp Output
IF Amp Output	6	9	Phase Shift Network
Phase Shift Network	7	8	Volume Controlled Audio Output

CMOS, Frequency Divider/Counter for VCR, V_{DD} = +4.75V to +8.5V — **8–Lead DIP, See Diag. 246**

NTE1581

Divided Frequency Output	1	8	V_{DD}
V_{SS}	2	7	Tuner Shaped Waveform Output
Frequency Dividing Ratio Select Input	3	6	OSC Output
Reset Input $\overline{\text{RESET}}$	4	5	OSC Input

Pulse Amp/Delay Circuit/Starter Delay Circuit/ Counter for VCR, V_{CC} = 14V — **24–Lead DIP, See Diag. 272**

NTE1582

Tab/GND

DC Output	1	24	V_{CC}
NF	2	23	DC Output
Amp Input	3	22	NF (Amp Input)
Time Constant	4	21	Hold (Amp Input)
Time Constant	5	20	Comp Input
Comparative Signal Hold	6	19	Sync Input
Comparative Signal Hold	7	18	Comparative Signal Output
Current Adjust	8	17	Input
Time Constant	9	16	Control Input
DC Input	10	15	Counter Reset
Time Constant	11	14	Counter Switch
FG Pulse Output	12	13	Shaped FG or PG Input

FM Demod for VCR, V_{CC} = 14V — **16 + 2–Lead DIP, See Diag. 315**

NTE1585

V_{CC}	17		
Pre–Emph Coupling (+)	1	16	Video Input from LPF
Pre–Emph Feedback	2	15	Positive Sync Input
Pre–Emph Coupling (–)	3	14	AGC Adjust
Dark Clip Adjust	4	13	Differentiated Sync Input
White Clip Adjust	5	12	Video Input
FM Mod Current Limiting Resistor	6	11	Video Output to LPF
FM Carrier Balance	7	10	V_{CC}
FM Carrier Balance	8	9	Video Mod FM
GND	18		

Color TV Luminance Chroma System, V_{CC} = 15V — **28–Lead DIP, See Diag. 253**

NTE1589

GND	1	28	AGC
Video Input	2	27	Video Input
1st BPA	3	26	Tone Control
Color/Contrast Control	4	25	Video Tone Control
Color Control	5	24	Tone Control
Color Control Output	6	23	V_{CC}
Killer Filter	7	22	Contrast Control
Gate Pulse	8	21	Pedestal Clamp
VCO	9	20	ABL
Tint Control	10	19	Video Output
VCO	11	18	Blanking Pulse
VCO Output	12	17	B–Y Output
APC Filter	13	16	R–Y Output
Color Demod	14	15	G–Y Output

Servo Controller for VCR — **28–Lead DIP, See Diag. 253**

NTE1591

OSC Input	1	28	OSC Output
Bypass	2	27	Capstan Sample Pulse
Rec Lamp Circuit	3	26	Bypass
Rec Lamp Circuit	4	25	Capstan Output
Reg 6.3V	5	24	Capstan Trapezoid Gen
Rec Squelch Control	6	23	Mode Select
GND	7	22	Capstan FG Input
Sync Input	8	21	Mode Select 1
V_{CC}	9	20	Mode Select 2
Tracking	10	19	DTP Input
Disc Pulse Sample	11	18	Time Delay
Disc Output	12	17	Time Delay
Bypass	13	16	FF Switch
Bypass	14	15	Trapezoid V_{CC}

See Diagrams, beginning on Page 1–252

Color TV VIR Processor, V_{CC} = 14.4V — **16–Lead DIP, See Diag. 248**

NTE1593

V_{CC}	1	16	Vertical Sync Input (Positive Going)
Variable Y + (B–Y)	2	15	Vertical Sync Input (Negative Going)
Color Sample and Hold	3	14	Horizontal Flyback Pulse Input
Reference Sample and Hold	4	13	Chroma Pulse Width Adjust
Color Saturation Control Output	5	12	Composite Video Input (Negative Going Sync)
Tint Control Output	6	11	Composite Video Input (Positive Going Sync)
GND	7	10	LED Indicator
R–Y Input	8	9	Tint Sample and Hold

FM Demod/Limiter for VCR — **20–Lead DIP, See Diag. 254**

NTE1595

AT TIME OF PUBLICATION, DATA ON NTE1595, AN ACTIVE NUMBER, WAS NOT AVAILABLE

FM Demodulator/Noise Canceller/Video Amp for VCR, V_{CC} = 17V — **24–Lead DIP, See Diag. 272**

NTE1596

Tab/GND

FM Input	1	24	Coupling Capacitor
RF GND	2	23	Coupling Capacitor
Video Amp V_{CC}	3	22	RF V_{CC}
Output 1	4	21	Demodulated output
Output 2	5	20	Bias
Video GND	6	19	Video Input
EE Input	7	18	Noise Cancel V_{CC}
Muting Voltage	8	17	Gain Control
Chroma Input	9	16	HFP
Chroma Input	10	15	HFP
EE/PB Switching Voltage	11	14	Video Output
Video Amp Input	12	13	Limiter Level Adjust

Color Killer Detector/APC Phase Comparator/Buffer Amp for VCR, V_{CC} = 14V — **16 + 2–Lead DIP, See Diag. 315**

NTE1597

V_{CC} 17

f_O Adjust	1	16	EF Output
Killer Detector	2	15	VCO Input
ID Pulse Input	3	14	Base Input
ID Pulse Output	4	13	Sync Input
EF Output	5	12	Base Input
BPF	6	11	FF Output
EF Output	7	10	Buffer Amp Input
Phase Detector	8	9	Base Input

GND 18

Direct Drive Motor Predriver for VCR, V_{CC} = 14V — **16 + 2–Lead DIP, See Diag. 5315**

NTE1600

Motor Driver U1 17

Motor Driver U2	1	16	Hall Amp U (+)
Motor Driver V1	2	15	Hall Amp U (–)
Motor Driver V2	3	14	Hall Amp V (+)
Motor Driver W1	4	13	Hall Amp V (–)
Motor Driver W2	5	12	Hall Amp W (+)
Motor Fwd/Rev Run	6	11	Hall Amp W (–)
V_{CC}	7	10	Motor Current Detector
Speed/Phase Control Input	8	9	10k Resistor to V_{CC}

GND 18

Auto Radio Power Amp, 19W, V_{CC} = 18V (AC), V_{CC} = 26V (DC) — **12–Lead SIP, See Diag. 349**

NTE1602 Front View

12	Output 1
11	V_{CC}
10	V_{CC}
9	GND
8	V_{CC}
7	Output 2
6	ASO Protector
5	Ripple Filter
4	(–) Input
3	(+) Input
2	Feedback
1	ASO Protector

See Diagrams, beginning on Page 1–252

FM IF System for Auto Radio, V_{CC} = 16V Max — 16–Lead SIP, See Diag. 332

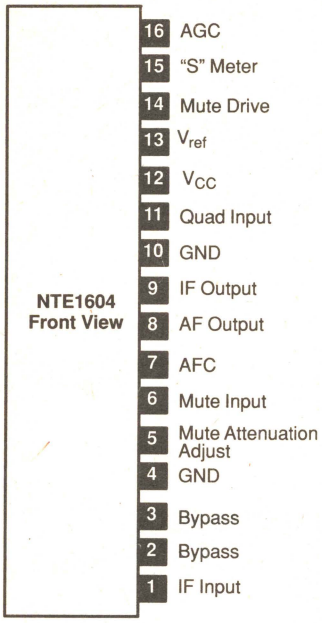

Dual, Audio Power Amp, 4W to 7W, V_{CC} = 20V — 12–Lead SIP, See Diag. 349

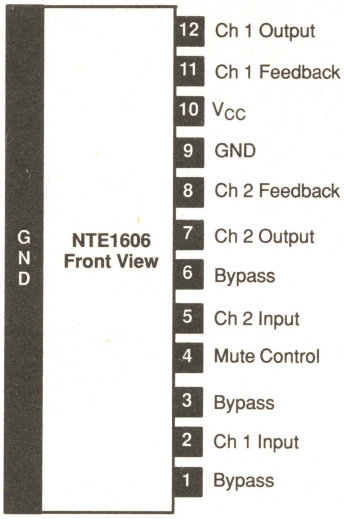

Video, Detector, AGC Circuit, V_{CC} = 5.5V — 9–Lead SIP, See Diag. 326

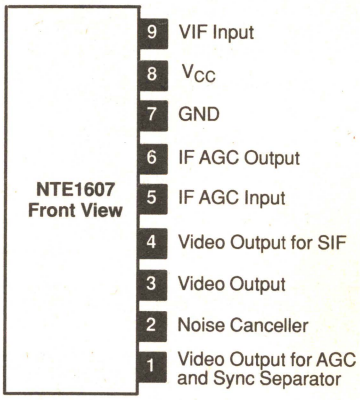

AM Tuner w/Electronic Tuning, V_{CC} = 16V — 20–Lead DIP, See Diag. 254

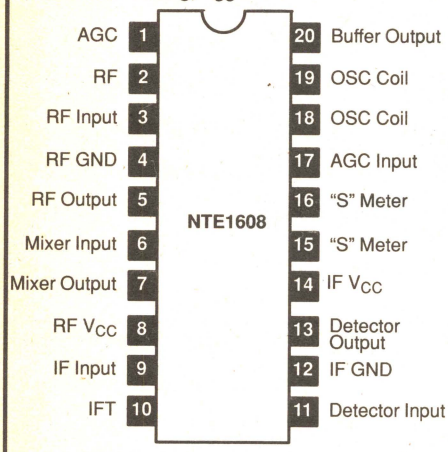

Instrumentation Timer, V_{CC} = 16V — 7–Lead SIP, See Diag. 424

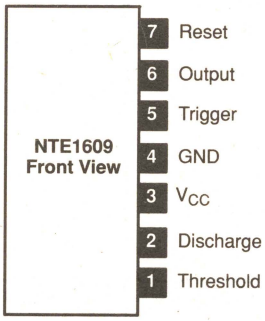

TV VIF, Video Amp/Det, AGC, V_{CC} = 13.2V — 9–Lead SIP, See Diag. 326

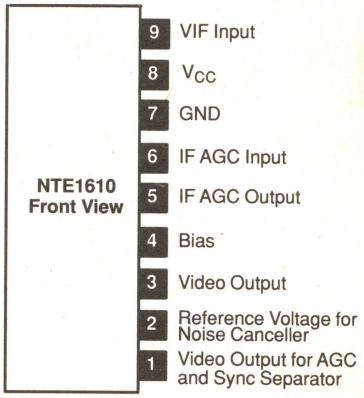

Video and FM Sound Mod/Carrier OSC for VCR, V_{CC} = 12V — 16–Lead DIP, See Diag. 248

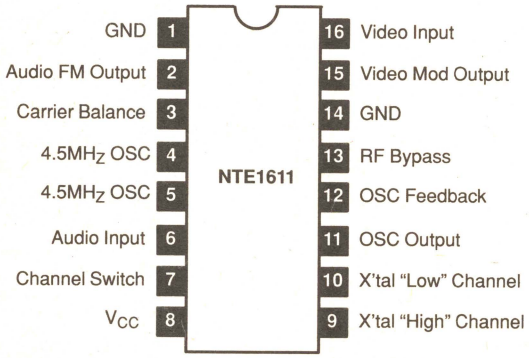

AF PO, 700mW, for Battery Use, V_{CC} = 6V — 9–Lead SIP, See Diag. 223

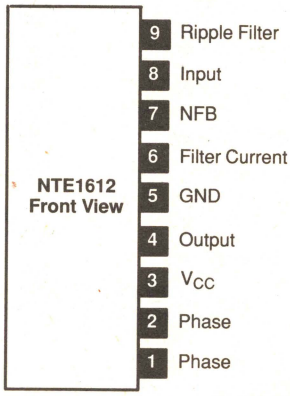

See Diagrams, beginning on Page 1–252

Cylinder Motor Driver/Control for VCR, V_{CC} = 15V Max — 24–Lead DIP, See Diag. 500

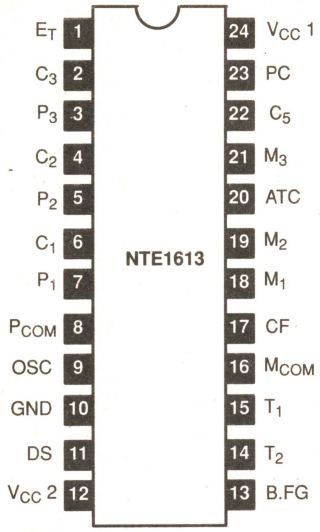

Tuner Band Switch Circuit, V_{CC} = 36V — 9–Lead SIP, See Diag. 326

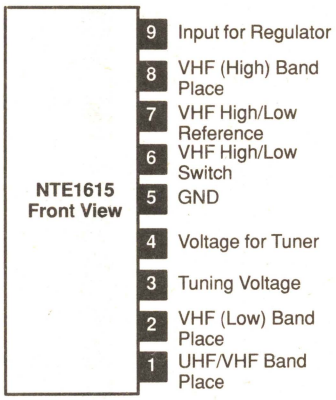

TV Sound IF Processor and Attenuator, V_{CC} = 15V — 14–Lead DIP, See Diag. 247

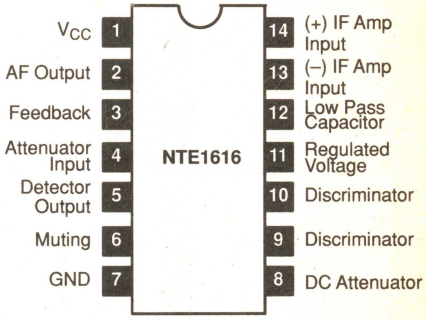

TV Video IF Amp — 9–Lead SIP, See Diag. 326

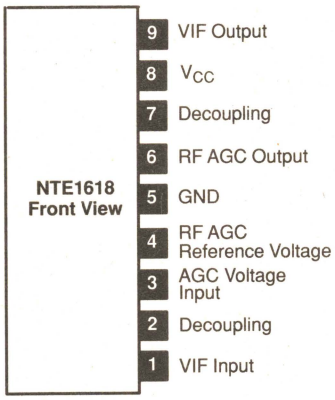

Dual Power Amp, 4.5W, V_{CC} = 18V — 12–Lead SIP, See Diag. 319

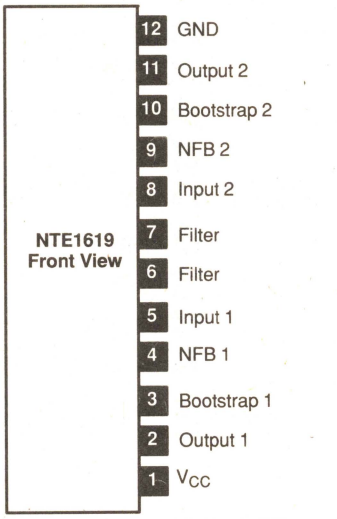

TV Video IF Amp/AGC, V_{CC} = 7.2V Max — 9–Lead SIP, See Diag. 326

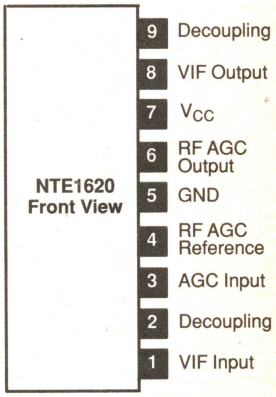

Recording Video Processor for VCR, V_{CC} = 14.4V Max — 24–Lead DIP, See Diag. 252

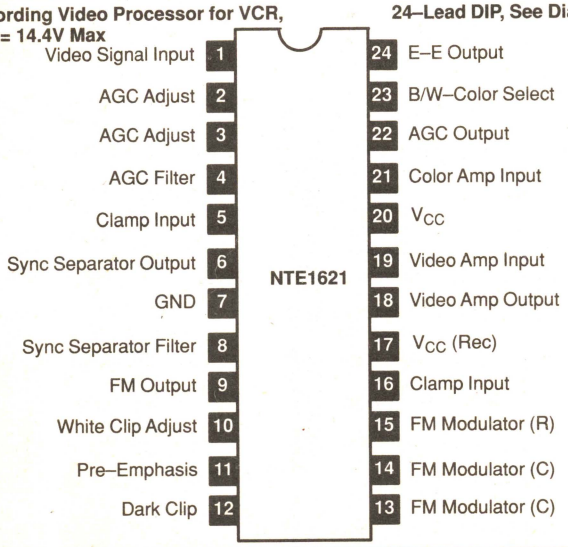

AM/FM Radio Circuit w/Power Amp, V_{CC} = 11V — 16–Lead DIP, See Diag. 248

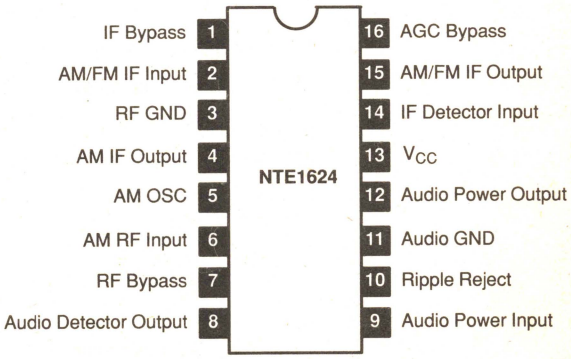

See Diagrams, beginning on Page 1–252

Tuner Bandswitch/ Tuning, V_{CC} = 24V — **9–Lead SIP, See Diag. 326**

NTE1625 Front View

9	V_{CC}
8	BM
7	Output
6	VHF Hifgh/Low
5	GND
4	Discriminator
3	BV
2	BU
1	Input

Dual, Audio Amp, 4.2W, V_{CC} = 16V — **12–Lead SIP, See Diag. 289**

NTE1626 Front View

12	GND (Output)
11	Output 2
10	V_{CC}
9	Bootstrap 2
8	NFB 2
7	Input 2
6	Input 1
5	NFB 1
4	Filter
3	Bootstrap 1
2	Output 1
1	GND (Input)

Power Amp, 0.55W, for Battery Operated Radios, V_{CC} = 12V — **9–Lead SIP, See Diag. 223**

NTE1627 Front View

9	Bypass
8	Input
7	NFB
6	Filter
5	GND
4	Output
3	V_{CC}
2	Phase
1	Phase

Bi–Directional Motor Driver for VCR — **9–Lead SIP, See Diag. 311**

NTE1628 Front View

9	V_{CC} 2
8	V_{CC} 2
7	Output 1 0_1
6	Input 2 1_2
5	GND
4	Input 1 1_1
3	Output 2 0_2
2	V_{CC} 1
1	V_{CC} 1

Sync Separator/ Phase Detector/Horizontal OSC/ Driver/X–Ray Protect, V_{CC} = 13.2V Max — **9–Lead SIP, See Diag. 326**

NTE1629 Front View

9	Reference Voltage Input
8	Sawtooth Generator
7	Horizontal Output
6	V_{CC}
5	GND
4	AFC Output
3	Flyback Input
2	Sync Separator
1	Video Input

Cylinder Motor Driver for VCR, V_{CC} = 14.4V Max — **24–Lead DIP, See Diag. 512**

NTE1630

Motor Current Output 2	1	24	Motor Current
Motor Current Output 3	2	23	Motor Current Output 1
Hall Element Reference Voltage	3	22	N.C.
Hall Element Voltage	4	21	V_M
Motor Current Detect	5	20	FG Output
Disable	6	19	PG Output
V_{CC}	7	18	MM Output
Lock Detect	8	17	Hall Element Voltage Input
Phase Compensation	9	16	Hall Element Voltage Input
Phase Compensation	10	15	Hall Element Voltage Input
Servo Reference Voltage	11	14	Hall Element Voltage Input
GND	12	13	Torque Detect Voltage

FM Stereo Multiplexer w/Soft Muting, V_{CC} = 14V — **16–Lead SIP, See Diag. 517**

NTE1631 Front View

16	PLL Filter
15	OSC Time Constant
14	PLL Filter
13	Lamp Filter
12	f_O Check AM Switching
11	Lamp Filter
10	Lamp Output
9	GND
8	Forced Monaural
7	Rt Output
6	Control Input
5	Lt Output
4	V_{CC}
3	Time Constant
2	PLL Input
1	Input

Vertical/Horizontal Sync Separator, V_{CC} = 12V — **18–Lead DIP, See Diag. 287**

NTE1632

Vertical Drive	1	18	Coincidence Detector
Vertical Feedback	2	17	Sandcastle Output
Vertical Frequency Adjust	3	16	Start Circuit Stabilizer
Vertical Sync Separator	4	15	Horizontal Frequency Adjust
Video Input	5	14	Phase Detector
Horizontal Sync Separator	6	13	Video Transmitter ID & Mute Output
Sync Slicer	7	12	Horizontal Flyback
Slow Phase Detector	8	11	Horizontal Drive
GND	9	10	V_{CC}

See Diagrams, beginning on Page 1–252

TV Sound Channel w/DC Controls, V_{CC} = 28V — **20–Lead DIP, See Diag. 339**

NTE1633

Turn Off Muting	1	20	AF PA Input
Sound IF Input	2	19	AF PA Feedback
IF Decoupling	3	18	V_{CC}
IF Decoupling	4	17	AF PA Feedback
GND	5	16	GND
GND	6	15	GND
Detector (FM)	7	14	DC VC Output
Detector (FM)	8	13	Volume Control
De–Emphasis & VCR Output	9	12	Tone Control
VCR Input	10	11	Tone Control Capacitor

Speaker Protector/Voltage/Temperature/Overload, V_{CC} = 60V — **8–Lead SIP, See Diag. 408**

NTE1635 Front View

8	Positive Feedback
7	Bias
6	Overload Detector
5	AC Signal Detector
4	Neutral Pot Detector
3	Temperature Detector
2	GND
1	Relay DR/Vcc

Dual, AF Power Amp, 4.2W, for Tape Recorder/Radio, V_{CC} = 18V — **14–Lead SIP, See Diag. 320**

NTE1637 Front View

14	NF 1
13	Input 1
12	Preamp GND
11	DC
10	Input 2
9	NF 2
8	Power Amp GND 2
7	Output 2
6	Bootstrap 2
5	BTL Output
4	V_{CC}
3	Output 1
2	Bootstrap 1
1	Power Amp GND 1

Dual Preamp w/ALC, V_{CC} = 14V — **14–Lead DIP, See Diag. 247**

NTE1634

GND	1	14	V_{CC}
Output 1	2	13	Output 2
PC 1	3	12	PC 2
NF 1	4	11	NF 2
Input 1	5	10	Input 2
ALC Output 1	6	9	ALC Output 2
ALC Input	7	8	DC

TV Picture Control for VCR — **22–Lead DIP, See Diag. 337**

NTE1636

Slow or Frame Advance	1	22	V_{CC}
Still or Pause	2	21	$30H_Z$ Switch
MM (6)	3	20	MM (1)
MM (7)	4	19	Control Pause Input
MM (8)	5	18	Run–Stop
MM (9)	6	17	Slow or Still Output
Record–Start	7	16	MM (2)
Slow Control	8	15	MM (3)
Record Cont Pause	9	14	Brake Control
MM (5)	10	13	Control Track Pulse Head
GND	11	12	MM (4)

CMOS, Clock Generator/Driver for BBD's, V_{DD} = –18V to +0.3V — **8–Lead DIP, See Diag. 246**

NTE1639

GND	1	8	V_{GG} (Out)
CP 1	2	7	OX 1
V_{DD}	3	6	OX 2
CP 2	4	5	OX 3

1024–Stage, Low Noise, BBD for Analog Signal Delays, V_{DD} = –18V to +0.3V — **8–Lead DIP, See Diag. 246**

NTE1641

GND	1	8	Output 2
CP 1	2	7	Output 1
Input	3	6	CP 2
V_{GG}	4	5	V_{DD}

Hybrid, TV Voltage Regulator, V_{IN} = 1000V Max, V_O = 107.7V ±1V, I_{IN} = 5A — **TO3, See Diag. 419**

NTE1645 Bottom View

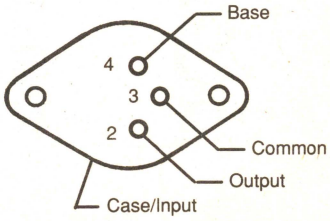

See Diagrams, beginning on Page 1–252

Telephone Ringer, V_{CC} = 29V Max — **8–Lead DIP, See Diag. 246**

NTE1648

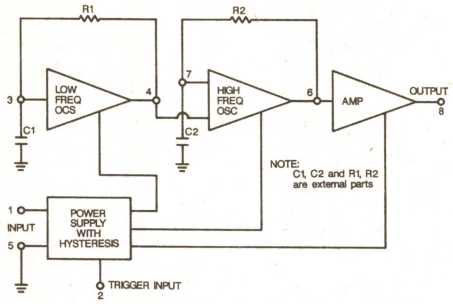

Telephone Ringer, V_{CC} = 29V Max — **8–Lead DIP, See Diag. 246**

NTE1649

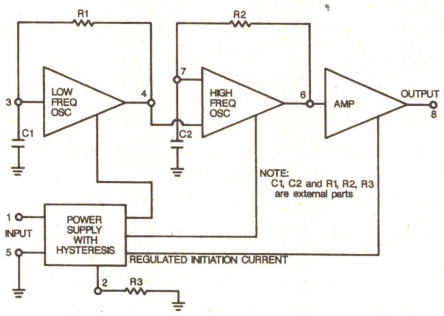

Video Signal Processor w/Auto Flesh Control, V_{CC} = 15V — **28–Lead DIP, See Diag. 253**

NTE1650

ACC Detector	1	28	Peaking Capacitor
Color Control	2	27	Video Input
Killer Detector	3	26	Contrast/Color Adjust
1st BPA	4	25	Pedestal Clamp
2nd BPA	5	24	VIR Output
GND	6	23	Brightness Control
Sync Pulse Input	7	22	Blanking Input
VCO Filter	8	21	Video Output
OSC Input	9	20	V_{CC}
OSC Output	10	19	Color Control Output
APC Control	11	18	B–Y Demod Input
DC Tint	12	17	B–Y Output
Tint Adjust	13	16	R–Y Output
Auto Flesh ON/OFF Switch	14	15	G–Y Output

Dual Preamp for Tape Recorder, V_{CC} = 16V — **16–Lead DIP, See Diag. 248**

NTE1651

GND	1	16	V_{CC}
V_S	2	15	Mute Input
Ch 1 Mute Output	3	14	Ch 2 Mute Output
Ch 1 Record Output	4	13	Ch 2 Record Output
Ch 1 Preamp Output & Record Input	5	12	Ch 2 Preamp Output & Record Input
Ch 1 Preamp Input NFB	6	11	Ch 2 Preamp Input NFB
Ch 1 Preamp Input	7	10	Ch 2 Preamp Input
ALC	8	9	Preamp GND

FM/AM IF System (Low Supply Voltage Use), V_{CC} = 8V — **16–Lead DIP, See Diag. 248**

NTE1654

GND	1	16	AM OSC
AM Output	2	15	Mixer Output
V_{CC} 2	3	14	V_{CC} 1
FM Output 2 (AFC)	4	13	AM Mixer input
FM Output 1	5	12	IF 1 Input
Quad	6	11	AM/FM Switch
AGC	7	10	IF 1 Output
IF 2 Input	8	9	Bypass

TV Stereo Decoder, V_{CC} = 16V — **16–Lead DIP, See Diag. 248**

NTE1655

Composite Input	1	16	V_{CC}
0.0082µf to Pin12	2	15	VCO Adjust
L + R Feedback	3	14	Phase Detector Filter
L + R Input	4	13	Phase Detector Filter
L – R Feedback	5	12	To Pin2
L – R Output	6	11	15.734kHz Monitor
Stereo Indicator LED	7	10	Stereo/Mono Switch
GND	8	9	Stereo/Mono Switch

See Diagrams, beginning on Page 1–252

TV IF System w/AFT RF AGC Reverse — **30–Lead DIP, See Diag. 511**

NTE1656

Pin	Function	Pin	Function
1	RF AGC Control	30	RF AGC Output
2	IF AGC Filter	29	Video Output
3	IF AGC Filter	28	AFT Coil
4	V_{CC}	27	Video Det Coil
5	AGC Lock–Out Prevent	26	Video Det Coil
6	GND	25	AFT Coil
7	Bypass	24	AFT Output
8	VIF Input	23	Trap Coil
9	VIF Input	22	Trap Coil
10	Bypass	21	De–Emphasis
11	GND	20	SIF Output
12	Audio Attenuator	19	Bypass
13	SIF V_{CC}	18	SIF Input
14	FM Det 4.5MHz	17	Audio Driver Output
15	FM Det 4.5MHz	16	Negative Feedback & Bypass

PLL (Phase Lock Loop) FM Stereo Multiplex, V_{CC} = 12V — **9–Lead SIP, See Diag. 213**

NTE1657 Front View

Pin	Function
9	Rt Ch Output
8	Lt Ch Output
7	LP Filter 2
6	Stereo Lamp
5	GND
4	VCO
3	V_{CC}
2	LP Filter 1
1	Input

TV Tuner Band Selector, V_{CC} = 12V — **9–Lead SIP, See Diag. 329**

NTE1658 Front View

Pin	Function
9	V_{CC} 1
8	Output 4
7	Output 3
6	V_{CC} 2
5	GND
4	Input
3	Input
2	Output 2
1	Output 1

Dual, AF Preamp, V_{CC} = 16V Max — **8–Lead SIP, See Diag. 224**

NTE1659 Front View

Pin	Function
8	Input 2
7	NFB 2
6	Output 2
5	GND
4	V_{CC}
3	Output 1
2	NFB 1
1	Input 1

Audio Preamp, V_{CC} = 15V — **8–Lead SIP, See Diag. 207**

NTE1660 Front View

Pin	Function
8	V_{CC}
7	Output
6	Bypass
5	GND
4	Feedback
3	Input
2	No Pin
1	Preamp Load Resistor

TV Horizontal/Vertical Processor, V_{CC} = 12V Typ (Vertical), V_{CC} = 6.7V Typ (Horizontal) — **16–Lead DIP, See Diag. 501**

NTE1661

Pin	Function	Pin	Function
1	Vertical Sync Input	16	Sync Signal Separator Output
2	Vertical OSC (Charge)	15	Sync Signal Separator Input
3	Vertical OSC (Discharge)	14	Horizontal AFC Input
4	V_{CC} (Vertical)	13	AFC Detector Output
5	Voltage Booster Output	12	Horizontal OSC Control
6	Vertical Feedback	11	Vertical Blanking Pulse Adjust
7	Voltage Booster Output	10	V_{CC} (Horizontal)
8	Vertical Amp Output	9	Horizontal Pulse Output

Tab/GND

TV Channel Selector System Controller, V_{CC} = 20V — **16–Lead DIP, See Diag. 248**

NTE1662

Pin	Function	Pin	Function
1	GND	16	V_B to Tuner
2	N.C.	15	U_B to Tuner
3	Channel Initial	14	Bandswitch 2
4	AFT	13	Detector Input
5	AFT	12	Bandswitch 1
6	Remote Control Input	11	D_I to Tuner
7	Control Voltage Output	10	B+
8	B+	9	Delay

See Diagrams, beginning on Page 1–252

TV Sound IF Amp/Detector/AF Output Circuits, V_{CC} (1) = 13.8V, V_{CC} (2) = 26V — **16–Lead DIP, See Diag. 513**

NTE1663

SIF Output	1	16	GND
Detector Input	2	15	Input Bias
V_{CC} 1	3	14	SIF Input
Detector Output	4	13	Variable Output
AF Input	5	12	AF Input
DC Volume	6	11	Filter
V_{CC} 2	7	10	Feedback
AF Output	8	9	GND

Tab

TV Vertical/Horizontal Sync — **22–Lead DIP, See Diag. 337**

NTE1664

Horizontal Sync Signal Separator Input	1	22	Vertical Sync Signal Separator Input
Horizontal Sync Signal Separator Output	2	21	V_{CC} (Vertical)
AFC Detector Input	3	20	Vertical Sync Signal Separator Output
AFC Detector Output	4	19	Vertical Sync Signal Input
Horizontal OSC Input	5	18	Vertical OSC (Charge)
X–Ray Protect Input	6	17	Vertical OSC (Discharge)
X–Ray Protect Reference	7	16	GND (Vertical)
X–Ray Protect Input	8	15	Vertical Feedback
GND (Horizontal)	9	14	Vertical Amp Output
Horizontal Pulse Output	10	13	Vertical Blank Pulse Width Adjust
V_{CC} (Horizontal)	11	12	Vertical Blank Pulse Output

High Voltage, Low Noise, Preamp, V_{CC} = 25V — **8–Lead SIP, See Diag. 207**

NTE1666 Front View

8	(+) V_{CC}
7	Input
6	Input
5	Bias
4	(–) V_{CC}
3	Bias
2	No Pin
1	Output

2 Channel Amp, 2.3W/Ch, BTL 4.7W, V_{CC} = 11V — **16–Lead DIP, See Diag. 263**

NTE1667

BTL Output	1	16	V_{CC}
Output 2	2	15	Output 1
Bootstrap 2	3	14	Bootstrap 1
Power Amp GND	Fin	Fin	Power Amp GND
NF 2	6	11	NF 1
Input 2	7	10	Input 1
DC	8	9	Preamp GND

TV Sound IF/Detector, V_{CC} = 12V — **8–Lead SIP, See Diag. 224**

NTE1668 Front View

8	SIF Input
7	SIF Input
6	Capacitor
5	GND
4	Detect Output
3	Detect Filter
2	Detect Filter
1	V_{CC}

Air Core Meter Driver — **14–Lead DIP, See Diag. 247**

NTE1670

Common	1	14	GND
Sine Output	2	13	V_{CC}
N.C.	3	12	Cosine Output
N.C.	4	11	8.5V Reg
Inverting Input	5	10	Signal Input
Non–Inverting Input	6	9	Pulse Train
GND	7	8	Norton Amp Out

Video Chroma Demod, Horizontal, Vertical OSC, Driver, V_{CC} = 12V — **42–Lead DIP, See Diag. 335**

NTE1671

Color Control	1	42	C–Contrast Output
E–Contrast Output	2	41	Brightness Control
V_{CC}	3	40	Clamp Input
Delay Input	4	39	B–Sync Separator
Contrast Control	5	38	E–Sync Separator
Video Inv Input	6	37	Sync Output
Video Inv Output	7	36	Horizontal OSC Discharge
Hue Control	8	35	AFC
Chroma Input	9	34	Horizontal OSC Timing
ACC Filter	10	33	Horizontal V_{CC} (8V)
GND	11	32	GND
Chroma Output	12	31	Vertical Sync Input
Killer Filter	13	30	Timing
Demod Input	14	29	Height Control
APC Filter	15	28	Ramp Capacitor
X'tal Drive	16	27	NFB Input
X'tal Input	17	26	Vertical Drive Output
$-\pi/4$ Input	18	25	Phase Compensation
B–Y Output	19	24	Horizontal Drive Output
G–Y Output	20	23	X–Ray Protect
R–Y Output	21	22	Y Output

See Diagrams, beginning on Page 1–252

Power Supply Control Circuit, V_{CC} = 18V — **16–Lead DIP, See Diag. 248**

NTE1672

V_{CC}	1	16	Feed Forward
V_Z	2	15	Output (Collector)
Feedback	3	14	Output (Emitter)
Gain	4	13	Demagnetization/Overvoltage
Modulation	5	12	GND
Duty Cycle Control	6	11	Current Limiting
R_T	7	10	Remote ON/OFF
C_T	8	9	External Sync

TV Vertical Deflection Output Circuit, V_{CC} = 27.6V Max — **9–Lead SIP, See Diag. 312**

NTE1674 Front View

9	V_{CC}
8	Feedback
7	Vertical OSC Pulse Input
6	Feedback Vertical Sawtooth Input
5	Buffer Output
4	Feedback
3	N.C.
2	Vertical Voice Feedback
1	GND

Vertical Deflection Circuit for Color TV, V_{CC} = 27V — **7–Lead SIP, See Diag. 277**

NTE1676 Front View

7	Voltage Boost Output
6	V_{CC}
5	Pulse Width Adjust
4	Vertical Input
3	Boosted Voltage Input
2	Output
1	GND

Switching Regulator for TV, V_{CC} = 6.6V Typ — **14–Lead DIP, See Diag. 250**

NTE1678

Error Voltage Input	1	14	Reference Voltage Input
Duty Limit	2	13	Error Amp Output
ON/OFF Output	3	12	Comparator Input
ON/OFF Input	4	11	OSC
Current Limit	5	10	Synchronization
Shutdown	6	9	GND
Pulse Output	7	8	V_{CC}

Video Chroma Processor, V_{CC} = 14.5V Max — **28–Lead DIP, See Diag. 253**

NTE1673

Video Input	1	28	Video Tone Control
Color Control	2	27	Sharp Video Tone Network
ACC Detector	3	26	Sharp Video Tone Network
V_{CC}	4	25	Soft Video Tone Network
Killer RC Network	5	24	Contrast Control
GND	6	23	High Level Contrast Control
Tint Control	7	22	DC Restorer Network
X'tal	8	21	Brightness Control
Tint Network	9	20	Horizontal Sync Output
Demod Network	10	19	Brightness Sample
APC Control	11	18	Horizontal Blank Pulse
R–Y Demodulation	12	17	Color Temp Control
G–Y Matrix	13	16	Horizontal Sync Input
B–Y Demodulation	14	15	Video Output Driver

Dual, AF Power Amp, 8.5W, V_{CC} = 24V — **20–Lead DIP, See Diag. 255**

NTE1675

V_{CC}	1	20	Power GND
Bootstrap	2	19	Bootstrap
Switch Distortion	3	18	Switch Distortion
Output	4	17	Output
Phase Compensation	5	16	Phase Compensation
Phase Compensation	6	15	Phase Compensation
N.F.	7	14	N.F.
Input	8	13	Input
DC (A)	9	12	DC (B)
Pre GND	10	11	TSD Control

Frequency Synthesizer for TV/CATV, V_{CC} = 5V — **16–Lead DIP, See Diag. 248**

NTE1677

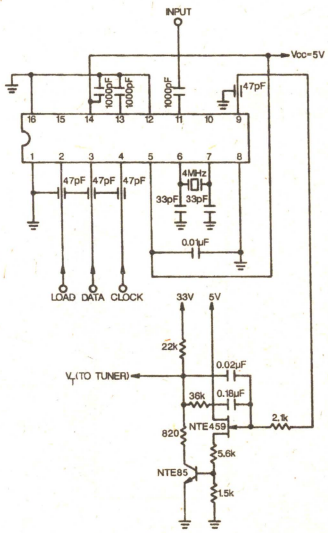

See Diagrams, beginning on Page 1–252

Mode Detector, V_{CC} = 15V — **14–Lead DIP, See Diag. 247**

NTE1679

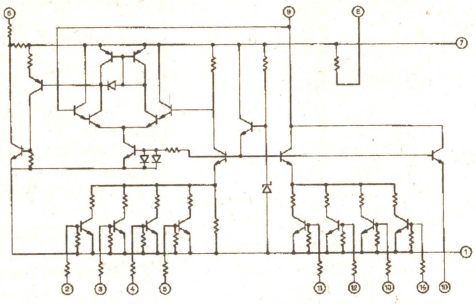

High Speed 6 Diode Array, Common Anode, t_{rr} = 4.0ns Typ, C_t = 5.0pF Typ — **7–Lead SIP, See Diag. 208**

NTE1680 Front View

7	Cathode D6
6	Cathode D5
5	Cathode D4
4	Common Anode
3	Cathode D3
2	Cathode D2
1	Cathode D1

High Power Switching Regulator — **15–Lead SIP, See Diag. 542**

NTE1681 Front View

15	Crowbar Output
14	Reset Output
13	Reset Delay
12	Reset Input
11	OSC
10	Feedback Input
9	Gain Adjust
8	GND/Tab
7	Sync Input
6	Inhibit Input
5	Soft–Start
4	External Current Limiter
3	V_{CC}
2	Output
1	Crowbar Input

TV Remote Control Amp, V_{CC} = 14.4V — **9–Lead SIP, See Diag. 326**

NTE1682 Front View

9	Bypass & Voltage Regulator Output
8	V_{CC}
7	Amp Output
6	Schmitt Trigger Input
5	GND
4	Schmitt Trigger Output
3	Feedback 2
2	Feedback 1
1	Amp Input

Horizontal/Vertical Processing Circuit, V_{CC} = 12V — **18–Lead DIP, See Diag. 287**

NTE1683

AFC Reference Signal Input	1	18	Video Signal Input
Horizontal AFC Output	2	17	Sync Separator
Horizontal OSC	3	16	Sync Separator Output
X–Ray Protect Input	4	15	V_{CC} 1
GND	5	14	Vertical Sync Separator
Horizontal Output	6	13	Vertical Hold
V_{CC} 2	7	12	Vertical Pulse Output
Vertical Output	8	11	Vertical Sawtooth Capacitor
Vertical Feedback Input	9	10	GND

TV Vertical Deflection Circuit, V_{CC} = 24V — **7–Lead SIP, See Diag. 539**

NTE1684 Front View

7	V_{CC}
6	Pulse Amp Output
5	Trigger Pulse Input
4	Input
3	Output Supply Voltage
2	Output
1	GND

Dual, AF Power Output, 3.5W/Ch, V_{CC} = 16V — **10–Lead SIP, See Diag. 237**

NTE1685 Front View

10	Output 1
9	V_{CC}
8	Power Amp GND
7	Output 2
6	Feedback 2
5	Input 2
4	Preamp GND
3	Decoupling
2	Input 1
1	Feedback 1

See Diagrams, beginning on Page 1–252

Dual, Audio Amp, 7.8W, V_{CC} = 15V Max — **11–Lead SIP, See Diag. 455**

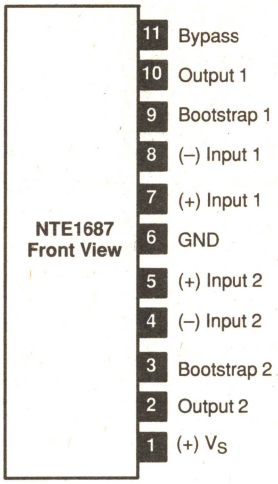

TV Tuner Bandswitch, V_{CC} = 18V — **9–Lead SIP, See Diag. 326**

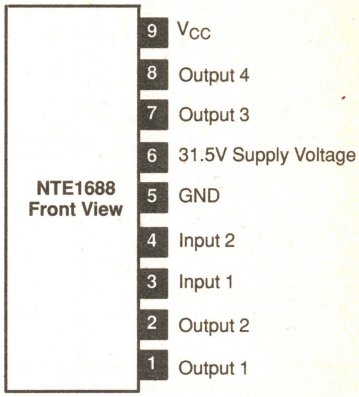

Head Amp Circuit for VCR, V_{CC} = 5V — **18–Lead DIP, See Diag. 287**

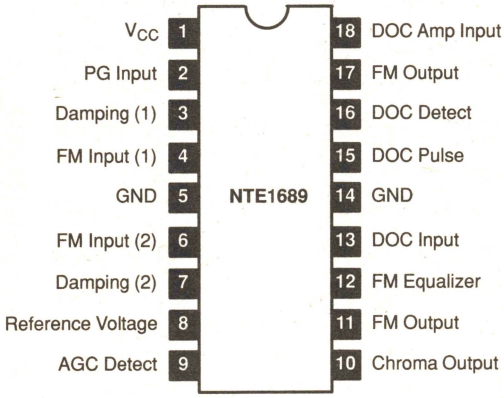

CMOS, Telephone Dual Tone Multi Frequency Dialer (DTMF), V_{CC} = 10.5V Max — **16–Lead DIP, See Diag. 248**

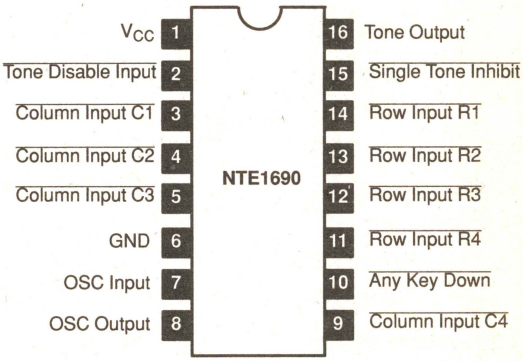

Telephone Pulse Dialer (V_{ref}), V_{CC} = 6V Max — **18–Lead DIP, See Diag. 287**

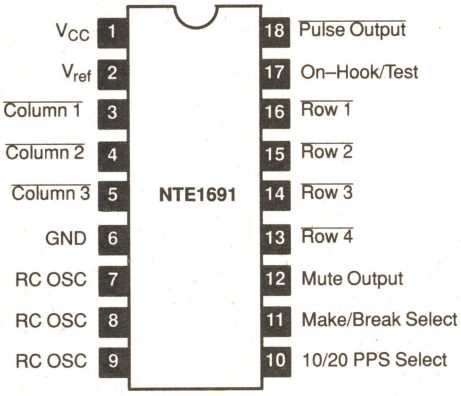

Telephone Pulse Dialer (Tone Output), V_{CC} = 6V Max — **18–Lead DIP, See Diag. 287**

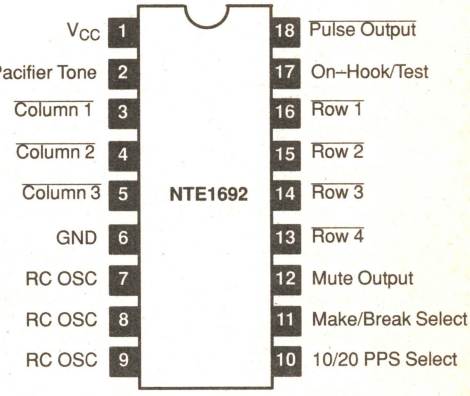

See Diagrams, beginning on Page 1–252

CMOS, Telephone Pulse Dialer, V_{CC} = 6V Max — **16–Lead DIP, See Diag. 248**

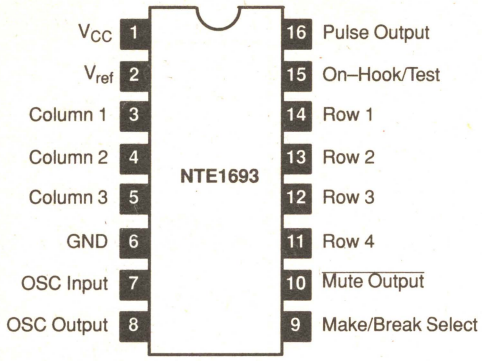

2, 4, & 6 Hour Auto Discriminator for VCR, V_{CC} = 12V — **18–Lead DIP, See Diag. 287**

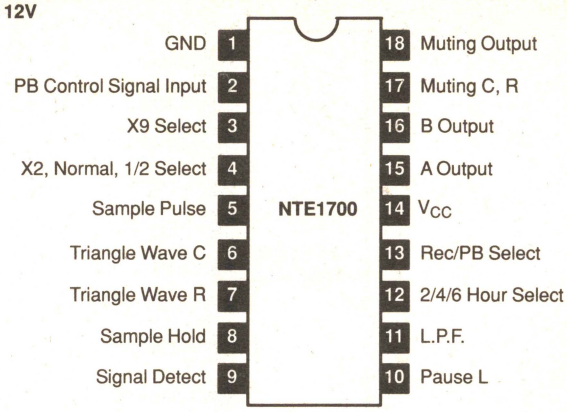

Cylinder Servo Control Circuit for VCR, V_{CC} = 12V — **28–Lead DIP, See Diag. 253**

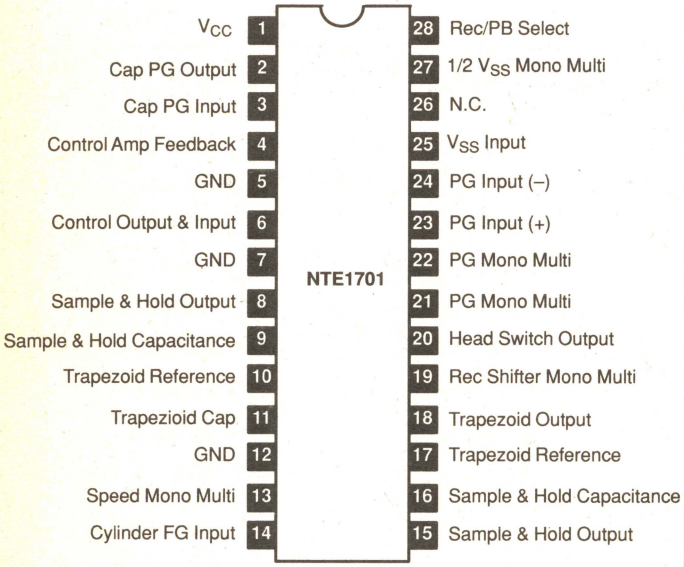

Color ACC Circuit for VCR, V_{CC} = 12V — **18–Lead DIP, See Diag. 287**

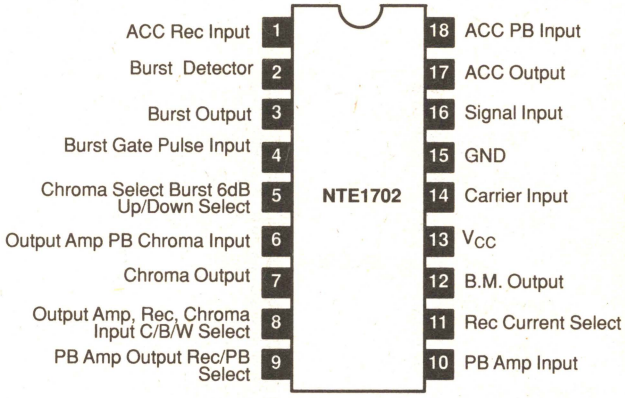

Color APC (BM Rec/PB Switching Circuit) for VCR, V_{CC} = 12V — **16–Lead DIP, See Diag. 249**

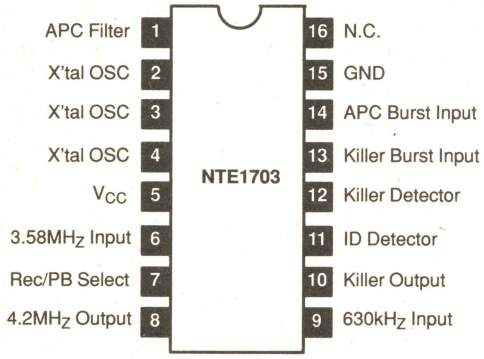

Audio Power Amp, 1.2W, V_{CC} = 9V — **9–Lead SIP, See Diag. 326**

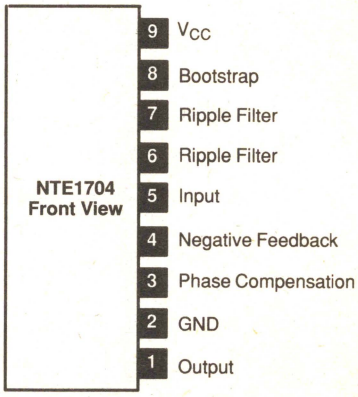

See Diagrams, beginning on Page 1–252

Hall Switch for VCR, V_{CC} = 18V — **3–Lead SIP, See Diag. 548**

NTE1705 Front View

3	Output
2	GND
1	V_{CC}

Dual, AF PO for Car Stereo, V_{CC} = 13.2V Typ — **12–Lead SIP, See Diag. 468**

NTE1707 Front View

12	Power Amp GND
11	Bootstrap 1
10	Output 1
9	V_{CC}
8	Output 2
7	Bootstrap 2
6	NF 2
5	Input 2
4	DC
3	Preamp GND
2	Input 1
1	NF 1

TV Tuner Bandswitch, V_{CC} = 14V — **9–Lead SIP, See Diag. 329**

NTE1708 Front View

9	V_{CC}
8	Control Switch
7	Tuner Output
6	Tuner Output
5	GND
4	CPU Input
3	CPU Input
2	Tuner Output
1	Tuner Output

Dual Balanced Modulator for Video Cameras, V_{CC} = 9V — **9–Lead SIP, See Diag. 326**

NTE1709 Front View

9	Output 2
8	Reference Voltage
7	Carrier Input 2
6	Signal Input 2
5	GND
4	Signal Input 1
3	Carrier Input 1
2	V_{CC}
1	Output 1

Record/Playback Circuit for VCR, V_{CC} = 9V — **22–Lead DIP, See Diag. 337**

NTE1710

EQ Input	1	22	MIC Input
EQ Negative Feedback	2	21	MIC Negative Feedback
EQ Output	3	20	MIC Output
Buffer Input (PB)	4	19	AGC Input
Buffer Feedback (Rec)	5	18	Rec/PB Switch
Buffer Output	6	17	Muting Switch
Line Input (Rec)	7	16	Rec Input
Line Input (PB)	8	15	Rec Negative Feedback
Line Output	9	14	Rec Output
GND	10	13	Reference Voltage
AGC Control	11	12	V_{CC}

2 Head Record Amp for VCR, V_{CC} = 9V — **9–Lead SIP, See Diag. 326**

NTE1711 Front View

9	GND
8	Output
7	GND
6	Feedback
5	Reference Resistance
4	Color Input
3	FM Input (B/W)
2	V_{CC}
1	FM Input (Color)

Record Video Signal Processor for VCR, V_{CC} = 5V — **22–Lead DIP, See Diag. 337**

NTE1712

PB Video Input	1	22	EE Output
AGC Detector	2	21	Rec/PB Select
Rec Video Input	3	20	Clamp Input
EE Adjust	4	19	GND
H Sync Input	5	18	Video Output
Pulse Timing Delay	6	17	Non–Linear Emph
V_{CC}	7	16	Clamp Input (PB)
FM Modulator	8	15	Main Emph NF Input
FM Modulator	9	14	Main Emph Output
White Clip Adjust	10	13	Dark Clip Adjust
FM Modulator Output	11	12	FM Modulator Input

See Diagrams, beginning on Page 1–252

Line Noise Canceller for VCR, V_{CC} = 5V — **18–Lead DIP, See Diag. 287**

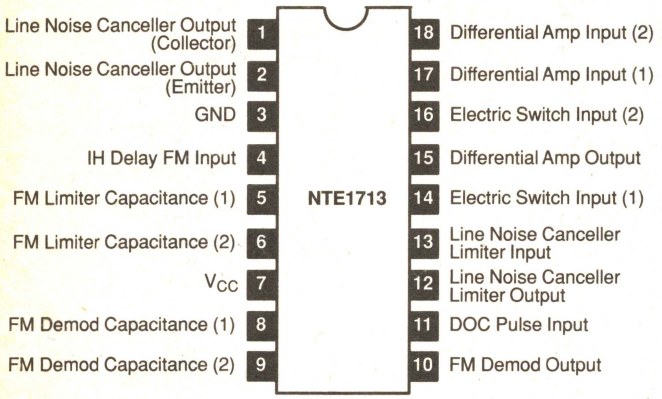

Remote Control Amp/Detector, V_{CC} = 15V — **8–Lead DIP, See Diag. 245**

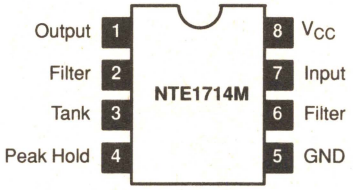

Remote Control Preamp, V_{CC} = 15V — **8–Lead SIP, See Diag. 224**

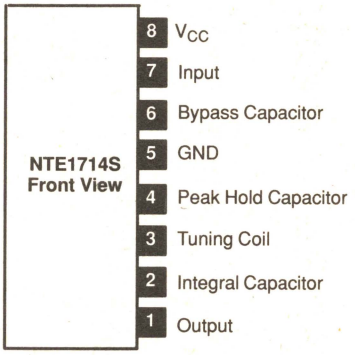

8–Circuit Display Driver, V_{CC} = 55V — **18–Lead SIP, See Diag. 287**

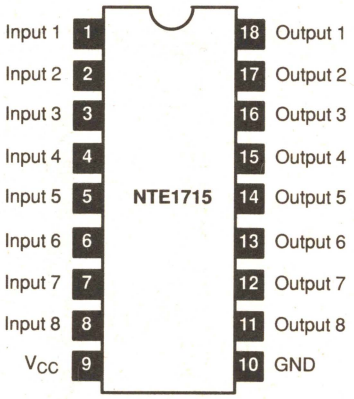

Reversible Motor Driver for VCR, V_{CC} = 18V — **10–Lead SIP, See Diag. 240**

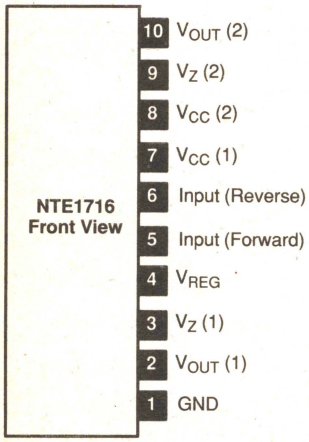

Dual Switching Regulator for VCR, V_{CC} = 18V — **16–Lead Staggered SIP, See Diag. 517**

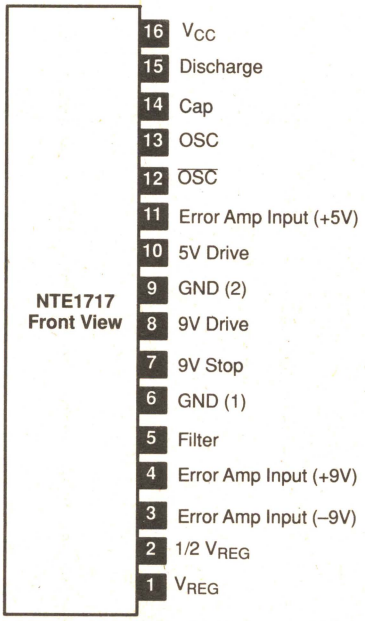

Dual Comparator, V_{CC} = ±18V or 36V — **9–Lead SIP, See Diag. 213**

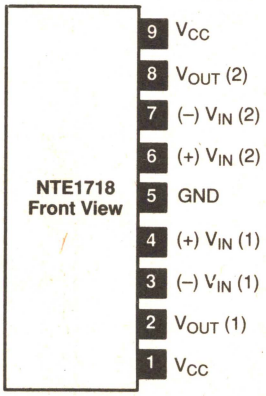

See Diagrams, beginning on Page 1–252

Pulse Width Modulator (PWM) Regulator, V_{CC} = 40V Max — **16–Lead DIP, See Diag. 249**

NTE1720

Inverting Input	1	16	V_{ref}
Non–Inverting Input	2	15	V_{IN}
OSC Output	3	14	Emitter B
I_{LIMIT} Sense (+)	4	13	Collector B
I_{LIMIT} Sense (–)	5	12	Collector A
R_T	6	11	Emitter A
C_T	7	10	Shutdown
GND	8	9	Compensation

Pulse Width Modulator (PWM) Regulator, V_{CC} = 40V Max — **16–Lead DIP, See Diag. 249**

NTE1721 (Pos Output) NTE1723 (Neg Output)

Inverting Input	1	16	V_{ref}
Non–Invert ing Input	2	15	V_{IN}
Sync	3	14	Output B
OSC Output	4	13	V_C
C_T	5	12	GND
R_T	6	11	Output A
Discharge	7	10	Shutdown
Soft–Start	8	9	Compensation

Switched Mode Power Supply Control Circuit, V_{CC} = 8V to 35V — **18–Lead DIP, See Diag. 287**

NTE1722

Error (+)	1	18	V_{ref}
Error (–)	2	17	V_{CC}
Compensation	3	16	Output B
$C_{SOFT-START}$	4	15	GND
$\overline{\text{Reset}}$	5	14	V_C
Current Sense (–)	6	13	Output A
Current Sense (+)	7	12	$\overline{\text{Sync}}$
$\overline{\text{Shutdown}}$	8	11	R_D
R_T	9	10	C_T

Audio Power Amp, 20W, 8Ω, V_{CC} = ±22V — **10–Lead SIP, See Diag. 443**

NTE1724 Front View

10	(–) V_{CC}
9	GND
8	NFB
7	Input
6	Phase Compensation
5	Phase Compensation
4	Muting
3	(+) V_{CC}
2	N.C.
1	Output

Color TV Picture IF System, V_{CC} = 12V — **16–Lead DIP, See Diag. 248**

NTE1725

Buffer Amp Output	1	16	RF AGC Input
GND	2	15	AGC Det
AFT Coil	3	14	Bypass
Det Coil	4	13	IF Amp Input
Det Coil	5	12	IF Amp Input
AFT Coil	6	11	Bypass
Defeat Switch	7	10	RF AGC Output
AFT Output	8	9	V_{CC}

TV Signal Processor, V_{CC} = 12V — **18–Lead DIP, See Diag. 287**

NTE1727

AFC Reference Signal Input	1	18	Video Signal Input
Horizontal AFC Output	2	17	Noise Detector Input
Horizontal Hold Volume	3	16	Sync Separator Output
Horizontal OSC Capacitor	4	15	V_{CC} (1)
X–Ray Protect Input	5	14	Vertical Integral Capacitor
Horizontal Output	6	13	Vertical Hold Volume
V_{CC} (2)	7	12	Vertical Pulse Output
Vertical Output	8	11	Vertical Sawtooth Capacitor
GND	9	10	DC/AC Feedback Input

TV Video & Chroma Processing Circuit, V_{CC} = 12V — **24–Lead DIP, See Diag. 252**

NTE1726

Picture Control	1	24	Pedestal Clamp Filter
Contrast Control	2	23	Brightness Control
Black Level Filter	3	22	B–Y Output
Video Input (1)	4	21	G–Y output
Video Input (2)	5	20	R–Y Output
Chrominance Bypass	6	19	Y Output
Chrominance Input	7	18	Blanking Pulse Input
GND	8	17	3.58MHz OSC Input
Color Control	9	16	3.58MHz OSC Output
Tint Control	10	15	Color Killer Filter
Burst Gate Pulse Input	11	14	APC Filter
V_{CC}	12	13	ACC Filter

See Diagrams, beginning on Page 1–252

VIF & SIF Circuit for VCR, V_{CC} = 12V — **30–Lead DIP, See Diag. 536**

NTE1728

Ceramic Discriminator	1	30	Creamic Discriminator
De–Emphasis	2	29	Mute Attenuator
AF Input	3	28	Mute Switch
N.F.	4	27	Ceramic Filter
AF Output	5	26	SIF Input
GND	6	25	SIF Output
IF AGC Filter	7	24	SIF V_{CC}
Mute	8	23	VIF V_{CC}
VIF Input	9	22	Video Output
VIF Input	10	21	AFT Coil
Mute	11	20	LLD Coil
RF AGC VR	12	19	LLD Coil
RF AGC Output	13	18	AFT Coil
IF AGC Filter	14	17	AFT Coil
Sound Trap	15	16	Sound Trap

Pulse Width Modulator (PWM) Control Circuit, V_{CC} = 15V Typ — **16–Lead DIP, See Diag. 248**

NTE1729

Non–Inverting Input	1	16	Non–Inverting Input
Inverting Input	2	15	Inverting Input
Feedback	3	14	Reference Output
Dead–Time Control	4	13	Output Control
C_T	5	12	V_{CC}
R_T	6	11	Collector 2
GND	7	10	Emitter 2
Collector 1	8	9	Emitter 1

Dual Preamp, V_{CC} = 18V — **9–Lead SIP, See Diag. 213**

NTE1730 Front View

9	Muting
8	(+) Input Ch 2
7	(–) Input Ch 2
6	Output Ch 2
5	GND
4	V_{CC}
3	Output Ch 1
2	(–) Input Ch 1
1	(+) Input Ch 1

CMOS, 10 Number Dialer, V_{DD} = 2.5V to 6V — **16–Lead DIP, See Diag. 248**

NTE1731

V_{DD}	1	16	Pulse Output
Test	2	15	Hook Switch
Column Input	3	14	Row Input
Column Input	4	13	Row Input
Column Input	5	12	Row Input
GND	6	11	Row Input
OSC Input	7	10	Mute Output
OSC Output	8	9	Make/Break Select

Module, TV Voltage Regulator W/4W Audio Output — **12–Lead SIP, See Diag. 543**

NTE1732 Front View

12	AF Input
11	GND
10	Bypass
9	AF Output
8	Bias Resistor
7	Bootstrap
6	Reg Voltage Output
5	No Pin
4	(–) DC Input
3	No Pin
2	Reg Drive
1	(+) DC Input

Module, 4 Output Voltage Regulator for VCR — **15–Lead SIP, See Diag. 544**

NTE1733 Front View

15	Decoupling
14	Decoupling
13	ON/OFF Control
12	GND
11	Reference Input
10	V_O 2 (9.5V @ 1.5A)
9	V_O 1 (15V @ 2A)
8	V_O 1 (15V @ 2A)
7	V_{IN} (DC) 1
6	V_O 3 (12V @ 1A)
5	V_{IN} (DC) 2
4	Decoupling
3	V_O 3 (12V @ 1A)
2	N.C.
1	V_O 4 (5.1V @ 0.5A)

Module, 3 Output Voltage Regulator for VCR — **15–Lead SIP, See Diag. 545**

NTE1735 Front View

15	Reference Input
14	H Switch
13	ON/OFF Control
12	GND
11	M Start
10	V_{IN} (DC) 1
9	V_{IN} (DC) 2
8	Reference Input
7	V_O 1 (16V @ 1A) V_O 2 (12V @ 1A)
6	Reference Input
5	V_O 3 (12V @ 1.5A)
4	Reference Input
3	V_{IN} (DC) 2
2	Control Voltage
1	V_O 4 (11.9V @ 1.5A)

See Diagrams, beginning on Page 1–252

4 Phase Stepping Motor Driver for Unipolar Constant Current Drive, V_{CC} = 30V Max — 18–Lead SIP, See Diag. 450

NTE1736 Front View

18	Pause
17	Motor Winding
16	$\overline{B}$ Input
15	Motor Winding
14	B Input
13	Motor Winding
12	R_{E2}
11	V_{ref}
10	GND
9	V_{ref}
8	R_{E1}
7	$\overline{A}$ Input
6	Motor Winding
5	A Input
4	Motor Winding
3	Zener Diode
2	Motor Winding
1	V_{CC}

Module, Chopper & Chopper Parallel w/2 Output Voltage Regulator, 5V @ 3A, 24V @ 3A — 18–Lead SIP, See Diag. 546

NTE1737 Front View

18	N.C.
17	V_{IN} 1
16	V_{IN} 1
15	V_{IN} 2
14	V_{IN} 2
13	V_Z
12	Sense GND
11	Output 2
10	Output 2
9	GND
8	GND
7	Output 1
6	Output 1
5	V1 Sense 1
4	V1 Sense 2
3	V2 Sense 1
2	V2 Sense 2
1	Cutoff

TV Remote Control Receiver, V_{DD} = 12V Typ — 28–Lead DIP, See Diag. 253

NTE1738

Power On Input	1	28	Reception Indication Output
(0V) V_{SS}	2	27	$\overline{\text{CH RESET}}$
Transmission Signal Input	3	26	$\overline{\text{CH UP}}$
Automatic Clear Input	4	25	$\overline{\text{CH RUN}}$
Key Input I1	5	24	Channel Control Output P0
Key Input I2	6	23	Channel Control Output P1
Key Input I3	7	22	Channel Control Output P2
Scanner Output 0A	8	21	Channel Control Output P3
Scanner Output 0B	9	20	Power ON/OFF Control Output
Scanner Output 0C	10	19	Call Control Output
Scanner Output 0D	11	18	Sound Mute Indication Output
OSC Input	12	17	D/A Output V_O
OSC Output	13	16	D/A Output BR
V_{DD}	14	15	D/A Output CS

TV Horizontal/Vertical Countdown Digital Sync System, V_{CC} = 8V Typ — 16–Lead DIP, See Diag. 248

NTE1739

Burst Gate Width Input	1	16	Burst Gate Output
Horizontal Ramp Input	2	15	Horizontal Ramp Driver Output
Horizontal Sync Input	3	14	Flyback Pulse Input
Vertical Sync Input	4	13	Inverted Horizontal Output
Filter	5	12	Blanking Output
VCO Tuning Circuit	6	11	Vertical Output
Shunt Regulator	7	10	Gain/Window Switch Input
Horizontal Output	8	9	GND

TV Fixed Voltage Regulator, V_O = 115V @ 1A — 5–Lead SIP, See Diag. 538

NTE1740 Front View

5	No Pin
4	Output
3	Common (–)
2	Base
1	Input/Case

TV Fixed Voltage Regulator, V_O = 125V @ 1A — 5–Lead SIP, See Diag. 538

NTE1741 Front View

5	No Pin
4	Output
3	Common (–)
2	Base
1	Input/Case

TV Fixed Voltage Regulator, V_O = 130V @ 1A — 5–Lead SIP, See Diag. 538

NTE1742 Front View

5	No Pin
4	Output
3	Common (–)
2	Base
1	Input/Case

TV Fixed Voltage Regulator, V_O = 135V @ 1A — 5–Lead SIP, See Diag. 538

NTE1743 Front View

5	No Pin
4	Output
3	Common(–)
2	Base
1	Input/Case

See Diagrams, beginning on Page 1–252

Dual dbxII Noise Reduction System, V_{CC} = 14.4V — **22–Lead DIP, See Diag. 337**

NTE1744

Adjust	1	22	V_{CC}
GND	2	21	N.C.
RMS Input A	3	20	RMS Input B
Timing A	4	19	Timing B
CCA Input A	5	18	CCA Input B
CAP1 A	6	17	CAP1 B
CAP2 A	7	16	CAP2 B
V_{OUT} A	8	15	V_{OUT} B
ON/OFF A	9	14	ON/OFF B
NI	10	13	I Time
Decode	11	12	Encode

High Speed Divider 1/20, 1/100, for VCR, V_{CC} = 5V Typ — **8–Lead SIP, See Diag. 224**

NTE1745 Front View

8	To Open Collector Output
7	V_{CC}
6	N.C.
5	V_{ref} Input Reference Bias
4	Input (T)
3	Frequency Division Ratio Selection Input (M)
2	N.C.
1	GND

TV Video Processing Circuit, V_{CC} = 14.4V — **28–Lead DIP, See Diag. 253**

NTE1747

Pedestal Clamp Filter	1	28	Picture Control
Brightness Control	2	27	B–Y Demod Output
Contrast Control	3	26	G–Y Demod Output
Blank Level Filter	4	25	R–Y Demod Output
Video Signal Input (1)	5	24	VCO Filter
Video Signal Input (2)	6	23	Video Signal Output
Chrominance Signal Bypass	7	22	VCO Filter
Chrominance Signal Input	8	21	AIC Input
GND	9	20	Blanking Pulse Input
Color Control	10	19	AIC Color Compensation Switch
Tint Control	11	18	VCO Input
Burst gate Pulse Input	12	17	VCO Output
V_{CC}	13	16	Color Killer Filter
ACC Filter	14	15	APC Filter

DC Motor Driver, V_{CC} = 25V Max — **7–Lead SIP, See Diag. 549**

NTE1748

7	Input
6	Load
5	N.C.
4	(+) V_{CC}
3	Load
2	Input
1	GND

Push–Pull Four Channel Driver, V_{CC} = 36V Max — **16–Lead DIP, See Diag. 248**

NTE1749

CE 1	1	16	V_{SS}
Input 1	2	15	Input 4
Output 1	3	14	Output 4
GND	4	13	GND
GND	5	12	GND
Output 2	6	11	Output 3
Input 2	7	10	Input 3
V_S	8	9	CE 2

Hammer & Stepper Motor Driver, V_{SS} = 10V Max, V_S = 46V Max — **15–Lead SIP, See Diag. 542**

NTE1750 Front View

15	Output High Ch 2
14	Output Low Ch 2
13	Current Sensing Ch 2
12	Input Reference Voltage Ch 2
11	Input Signal Ch 2
10	Logic Supply Voltage (V_{SS})
9	OSC RC Network
8	GND
7	$\overline{\text{Enable}}$
6	Input Signal Ch 1
5	Input Reference Voltage Ch 1
4	Current Sensing Ch 1
3	Output Low Ch 1
2	Output High Ch 1
1	Supply Voltage (V_{SS})

See Diagrams, beginning on Page 1–252

TV SCR Driver, V_{CC} = 30V Max — **7–Lead SIP, See Diag. 220**

NTE1751 Front View

7	Gate Drive
6	V_{CC}
5	Horiz Phase Component
4	GND
3	Current Source
2	N.C.
1	Error Input

Quasi–Split Sound IF w/Sound Demod, V_{CC} = 12V Typ — **18–Lead DIP, See Diag. 287**

NTE1752

IF Input	1	18	IF Input
Bypass	2	17	Bypass
Decouple	3	16	GND
AF Muting	4	15	V_{CC}
AF De–Emphasis	5	14	1st IF Output
AF Output	6	13	Limiter Amp Input
2nd IF/FM Demod	7	12	Limiter Amp Input
2nd IF/FM Demod	8	11	Bypass
Reference Amp Filter	9	10	Reference Amp Filter

Pulse Width Modulator (PWM) Control Circuit — **14–Lead DIP, See Diag. 247**

NTE1753

Non–Inverting Input (1)	1	14	Non–Inverting Input (2)
Inverting Input (1)	2	13	Inverting Input (2)
Feedback/ PWM Comparator Input	3	12	V_{ref}
Dead–Time Control	4	11	N.C.
C_T	5	10	V_{CC}
R_T	6	9	Collector
GND	7	8	Emitter

Vertical Deflection Output Circuit, V_{CC} = 40V Max — **9–Lead SIP, See Diag. 438**

NTE1754 Front View

9	V_{CC}
8	Flyback Generator
7	Voltage Stabilizer
6	Output Stage Supply Input
5	Output
4	Output Stage GND
3	Switching Circuit
2	GND
1	Input

Remote Control Transmitter, V_{CC} = 9V — **18–Lead DIP, See Diag. 287**

NTE1755

0V and XXX00	1	18	Carrier Time Constant	
Output	2	17	Stabilizer Voltage	
Output	3	16	PPM Time Constant	
V_{CC}	4	15	XXX01	Selection Matrix Current Sinks
Selection Matrix Current Sources: 000XX	5	14	XXX10	
001XX	6	13	XXX11	
010XX	7	12	111XX	Selection Matrix Current Sources
011XX	8	11	110XX	
100XX	9	10	101XX	

Remote Control Receiver, V_{CC} = 18V Max — **18–Lead DIP, See Diag. 287**

NTE1757

OSC Time Constant	1	18	V_{CC}	
PPM Input	2	17	Output Enable	
Control Inputs: C0	3	16	A	Binary Outputs
C1	4	15	B	
C2	5	14	C	
C3	6	13	D	
C4	7	12	E	
C5	8	11	Power On Clear	
V_{DD}	9	10	Data Ready	

CMOS, 27 Command TV Remote Control Transmitter, V_{DD} = –0.3V to +8V — **16–Lead DIP, See Diag. 248**

NTE1758

K0	1	16	K13
K1	2	15	K12
K2	3	14	K11
K3	4	13	K10
K4	5	12	Remote Signal Output
K5	6	11	OSC Output
K6	7	10	OSC Input
V_{SS}	8	9	V_{DD}

PMOS, 26 Command TV Remote Control Receiver, V_{DD} = –15V to +0.3V — **16–Lead DIP, See Diag. 248**

NTE1759

Power ON/OFF Input	1	16	Optional Output for Free Use
Channel Up Input	2	15	Channel Down Input
Channel Down Input	3	14	Channel Up Input
Volume Up Input	4	13	Remote Signal Input
Volume Down Input	5	12	V_{SS} (–12V)
Power ON/OFF Output	6	11	OSC Output
Volume Output	7	10	OSC Input
V_{DD} (GND)	8	9	Test

See Diagrams, beginning on Page 1–252

I/R Remote Control Preamp, V_{CC} = 5V Typ — **16–Lead DIP, See Diag. 248**

NTE1761 (Active High) / NTE1762 (Active Low)

Input Limiter	1	16	GND
Controlled HF Amp Input	2	15	Controlled HF Amp Input
Q–Factor Killer Input	3	14	Q–Factor Killer Output
HF Amp	4	13	HF Amp
HF Amp	5	12	AGC Detector
HF Amp	6	11	Pulse Shaper
Reference Amp	7	10	Reference Amp
V_{CC}	8	9	Output Buffer

Infrared Preamp, V_{CC} = 6V — **14–Lead DIP, See Diag. 247**

NTE1764

GND	1	14	Input Amp 1
Bypass	2	13	GND
V_{CC}	3	12	Ouptut Amp 1
Input Amp 3	4	11	Input Amp 2
Output Amp 2	5	10	Test Pin/N.C.
Separation Threshold Adjust	6	9	GND
Negative Pulse Output	7	8	Positive Pulse Output

Dual Channel Current Mode Controller, V_{CC} = 15V Typ — **16–Lead DIP, See Diag. 248**

NTE1765

Sync Input	1	16	V_{CC}
C_T	2	15	V_{ref}
R_T	3	14	Drive Output 2 Enable
Voltage Feedback 1	4	13	Voltage Feedback 2
Compensation 1	5	12	Compensation 2
Current Sense 1	6	11	Current Sense 2
Drive Output 1	7	10	Drive Output 2
GND	8	9	Drive GND

Video Chroma Deflection Circuit for Color TV, V_{CC} = 12V Typ — **30–Lead DIP, See Diag. 536**

NTE1771

2nd BPA	1	30	1st BPA
Sharp Video	2	29	ACC
Soft Video	3	28	GND
Contrast	4	27	Sync Separator
Contrast Control	5	26	Burst Gate Pulse
Pedestal Clamp	6	25	Vertical Sync Separator
Brightness Control	7	24	Ramp Generator
Y Output	8	23	Vertical Driver
R–Y	9	22	(+) B_H (110V)
G–Y	10	21	AFC
B–Y	11	20	(+) B_H
Color Killer	12	19	Horizontal OSC
Tint	13	18	X–Ray Protect
VCO	14	17	Horizontal Pre Driver
APC	15	16	(+) B_H (12V)

Color TV Sync, Deflection Circuit — **22–Lead DIP, See Diag. 337**

NTE1772

AFC Comparison Sawtooth Wave Input	1	22	Composite Blanking Pulse Output
AFC Time Constant Selection	2	21	Time Constant Circuit
AFC Output	3	20	Video Signal Input (Positive)
V_{CC} (12.6V Typ)	4	19	Time Constant Circuit
Time Constant Circuit	5	18	Video Signal Input (Positive)
Horizontal Output	6	17	Time Constant Circuit
Hold Down Input	7	16	Sandcastle Pulse Output
GND	8	15	Horizontal Vertical Sync Signal Output
Vertical Drive Output	9	14	V_{CC} (21V Typ)
Vertical Drive Sawtooth Wave Input	10	13	Vertical Trigger Input
Vertical Output Middle Point Voltage	11	12	Time Constant Circuit

Color TV Vertical Deflection Output Circuit, V_{CC} = 24V — **7–Lead SIP, See Diag. 537**

NTE1773 Front View

7	Pump–Up Output
6	V_{CC} 1
5	OSC Blocking Pin
4	Input
3	Vertical Output Power Supply
2	Vertical Output
1	GND

Dual, Bi–Directional Motor Driver — **12–Lead DIP, See Diag. 447**

NTE1774

V_{CC} 1	1	12	V_Z 1
Input 2	2	11	Input 1
Output 2	3	10	Output 1
GND	Fin	Fin	GND
Output 3	4	9	Output 4
Input 3	5	8	Input 4
V_Z 2	6	7	V_{CC} 2

See Diagrams, beginning on Page 1–252

PIF Subsystem for TV Receiver, V_{CC} = 15V — **16–Lead DIP, See Diag. 249**

NTE1775

IF Input	1	16	IF Input
Coupling Capacitor	2	15	Coupling Capacitor
RF/AGC Delay	3	14	AGC Filter
RF/AGC Output	4	13	GND
AFT 1	5	12	Video Output
AFT 2	6	11	V_{CC}
AFT Tank	7	10	AFT Tank
Video Tank	8	9	Video Tank

TV Fixed Voltage Regulator, V_O = 123V @ 1A — **5–Lead SIP, See Diag. 453**

NTE1776 Front View

5	Blank
4	Output
3	Input
2	Base
1	Common (–)

TV Fixed Voltage Regulator, V_O = 130V @ 1A — **5–Lead SIP, See Diag. 453**

NTE1777 Front View

5	Blank
4	Output
3	Input
2	Base
1	Common (–)

TV Fixed Voltage Regulator, V_O = 135V @ 1A — **5–Lead SIP, See Diag. 453**

NTE1778 Front View

5	Blank
4	Output
3	Input
2	Base
1	Common (–)

TV VIF Amp, Phase Lock Loop (PLL), V_{CC} = 14.4V — **22–Lead DIP, See Diag. 540**

NTE1779

IF AGC Filter	1	22	Lock Detect Filter
RF AGC Delay Adjust	2	21	AFC Coil
RF AGC Output	3	20	AFC Coil
Input Bias	4	19	AFC Output
IF Input	5	18	APC Filter
IF Input	6	17	APC Filter Switch
Input Bias	7	16	GND (VCO)
GND	8	15	VCO Coil
V_{CC}	9	14	VCO Coil
Video Output	10	13	VCO Coil
Video input	11	12	Detector Output

2 Channel Tone/DC Volume/Balance Control Circuit, V_{CC} = 14V — **12–Lead SIP, See Diag. 448**

NTE1780 Front View

12	Volume Control
11	Lt Ch Low Frequency Input
10	Lt Ch Output
9	Lt Ch Input
8	Treble Control
7	GND
6	Rt Ch Input
5	Bass Control
4	Rt Ch Low Frequency Input
3	Rt Ch Output
2	V_{CC}
1	Balance Control

Electronic Switch for VCR, V_{CC} = 12V Typ — **8–Lead SIP, See Diag. 328**

NTE1781 Front View

8	N.C.
7	Input 1
6	N.C.
5	GND
4	Output
3	Control Input
2	Input 2
1	V_{CC}

TV Vertical Drive/Output Circuit, V_{CC} = 24V Typ — **7–Lead SIP, See Diag. 539**

NTE1782 Front View

7	V_{CC}
6	Pulse Amp Output
5	Trigger Pulse Input
4	Input
3	Supply voltage for Output
2	Output
1	GND

See Diagrams, beginning on Page 1–252

TV DC Volume Control and Mute, V_{CC} = 10V Typ — **7–Lead SIP, See Diag. 215**

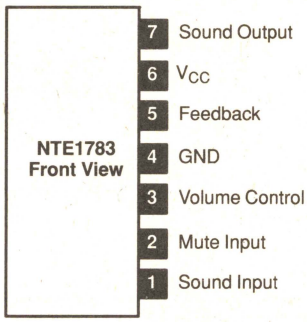

TV Horizontal Processor, V_{CC} = 12V Typ — **16–Lead DIP, See Diag. 248**

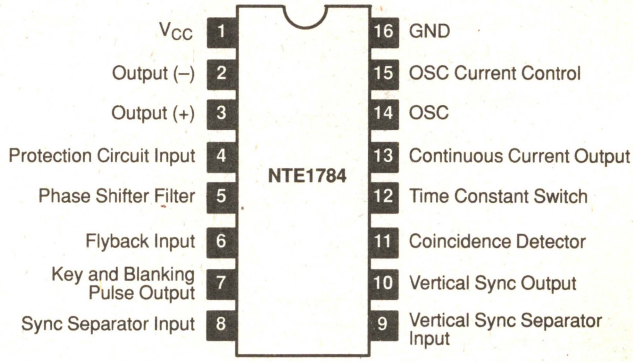

TV IF Amp w/Demod and AFC (For PNP Tuners), V_{CC} = 12V Typ — **16–Lead DIP, See Diag. 249**

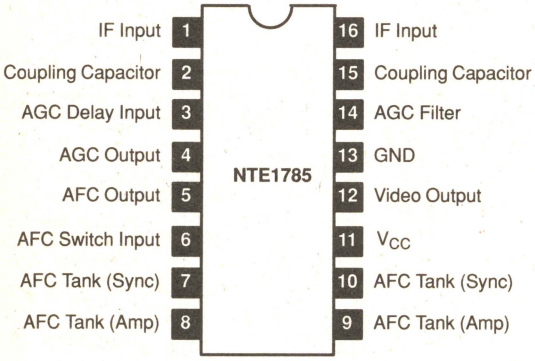

Frequency Lock Loop (FLL) Tuning and Control Circuit — **24–Lead DIP, See Diag. 252**

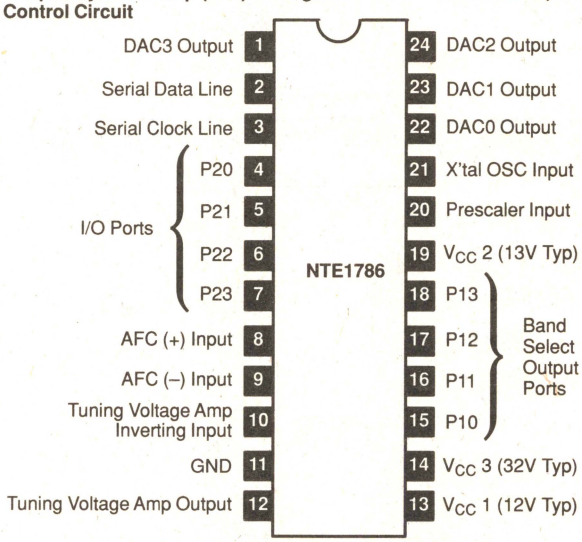

Record/Playback Switch for VCR, V_{CC} = 9V Typ — **7–Lead SIP, See Diag. 462**

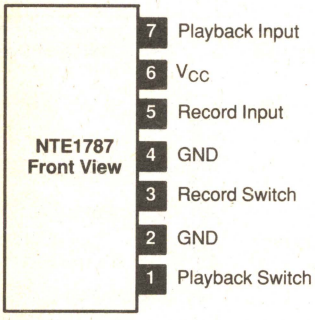

TV Vertical Deflection Output, V_{CC} = 35V Max — **7–Lead SIP, See Diag. 463**

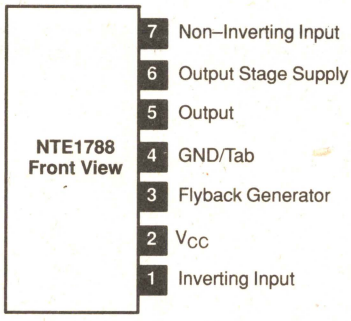

TV Sound Preamp, AF Output, Volume Control — **9–Lead SIP, See Diag. 312**

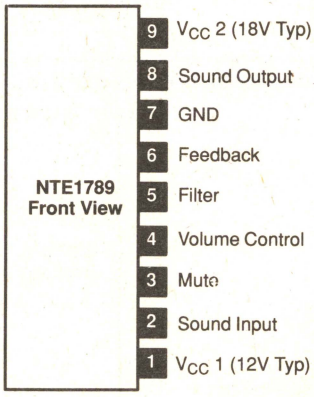

See Diagrams, beginning on Page 1–252

Video IF, Chroma Deflection, V_{CC} = 12V — **64–Lead DIP, See Diag. 451**

NTE1790

Pin	Function	Pin	Function
1	X–Ray Protect	64	Horizontal Driver Output
2	Tint Control	63	$32f_H$ VCO
3	Color Control	62	$32f_H$ VCO
4	f_{SC} VCO	61	$32f_H$ VCO
5	Killer Filter	60	AFC Time Constant
6	f_{SC} VCO	59	Flyback Pulse Input
7	APC Filter	58	H V_{CC} (6.8V)
8	Contrast Control	57	Sync Separator Input
9	R–Y Output	56	Sync Separator Time Constant
10	G–Y Output	55	Vertical NFB
11	B–Y Output	54	Vertical Output
12	GND	53	Video Input
13	–Y Output	52	Differential Input
14	Pedestal Clamp	51	Picture Sharpness
15	Brightness	50	GND
16	9V V_{CC} V/C/D	49	Chroma Input
17	Bypass	48	ACC Filter
18	RF AGC Delay	47	Video Output
19	9V V_{CC} PIF	46	RF AGC Output
20	PIF Input	45	Video Detector Tank
21	PIF Input	44	Video Detector Tank
22	PIF AGC Time Constant	43	AFT Tank/Defeat
23	PIF AGC Time Constant	42	AFT Output
24	GND	41	$4.5MH_Z$ Output
25	QIF Input	40	GND
26	QIF Input	39	I/C Detector
27	QIF AGC Time Constant	38	I/C Detector
28	Preamp Output	37	9V V_{CC} Q–SIF
29	NFB	36	SIF Input
30	Volume Control	35	SIF Bias
31	Audio Input	34	Detector Output
32	FM Detector Tank	33	FM Detector Tank

Voltage Controlled Amp (VCA) for dbx Noise Reduction, V_{CC} = ±12V Typ — **8–Lead SIP, See Diag. 224**

NTE1794 Front View

Pin	Function
8	Signal Output
7	V_{CC}
6	GND
5	I_{SET}
4	GC Bias
3	GC_1
2	GC_2
1	Signal Input

TV Remote Control Amp, V_{CC} = 5V Typ — **9–Lead SIP, See Diag. 469**

NTE1791 Front View

Pin	Function
9	V_{CC}
8	Input
7	Peak Hold Detector
6	Bias Filter
5	GND
4	1st Stage Tank
3	Carrier Filter
2	2nd Stage Tank
1	Output

Dual Attenuator, V_{CC} = 12V Typ — **9–Lead SIP, See Diag. 469**

NTE1792 Front View

Pin	Function
9	Reg V_{CC} Output
8	Control 2
7	Output 2
6	Input 2
5	GND
4	Input 1
3	Output 1
2	Control 1
1	V_{CC}

NTSC Chrominance, Luminance, Sync, Deflection Circuit, V_{CC} = 12V Typ — **42–Lead DIP, See Diag. 454**

NTE1793

Pin	Function	Pin	Function
1	GND (Other than Pin21)	42	Video Output
2	Chrominance Input	41	Brightness Control
3	Capacitor (ACC)	40	Sharpness (Secondary Differentiation) Input
4	Sharpness Control	39	Video Input
5	Color Control	38	Video Chrominance Output (Contrast)
6	GND	37	Video Chrominance Input
7	Color Killer Filter	36	Contrast Control
8	B–Y Output	35	Flyback Pulse Input
9	G–Y Output	34	Horizontal Blanking Pulse Input
10	R–Y Output	33	V_{CC} (Horizontal)
11	V_{CC} (Other than Pin33)	32	Video Input (Synchronizing Signal Separator)
12	Phase Filter	31	Horizontal Killer Filter
13	APC Filter (Chrominance)	30	Horizontal Killer Switch Output
14	Color VCO Filter	29	Horizontal VCO Filter
15	Color VCO Filter	28	Horizontal VCO Filter
16	Tint Control	27	Horizontal VCO Filter
17	Color VCO OSC	26	Low Pass Filter (f)
18	Vertical Feedback Input (DC)	25	Variable Phase Filter (Horizontal)
19	Vertical Feedback Input (AC)	24	Low Pass Filter (Ø)
20	Vertical Drive Output	23	Horizontal Predrive Output
21	GND (Horizontal, Vertical, Chrominance, and OSC)	22	X–Ray Protect Input

See Diagrams, beginning on Page 1–252

RMS Level Sensor for dbx Noise Reduction, V_{CC} = ±12V Typ — **8–Lead SIP, See Diag. 224**

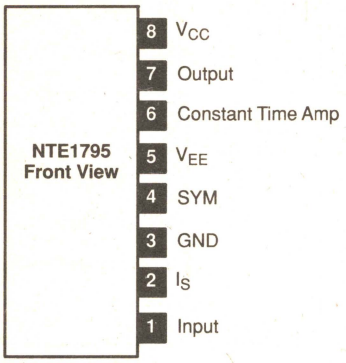

TV Fixed Voltage Regulator, V_O = 114.5V @ 6A — **5–Lead SIP, See Diag. 453**

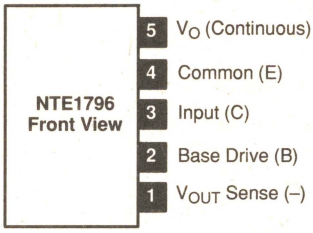

Color TV Vertical Deflection Output Circuit, V_{CC} = 24V Typ — **10–Lead SIP, See Diag. 322**

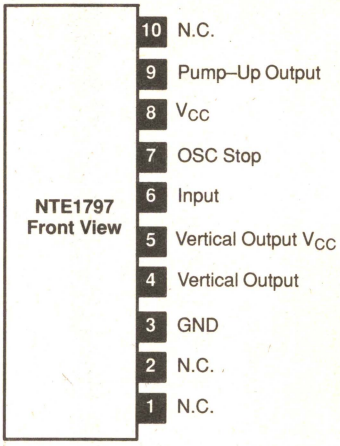

Dual, AF PO, 6W/Ch, V_{CC} = 25V — **10–Lead SIP, See Diag. 233**

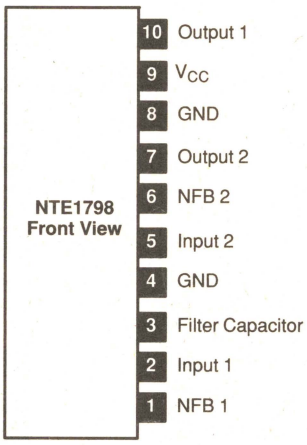

Electronic Switch for VCR and Audio Applications, V_{CC} = 12V Typ — **16–Lead DIP, See Diag. 248**

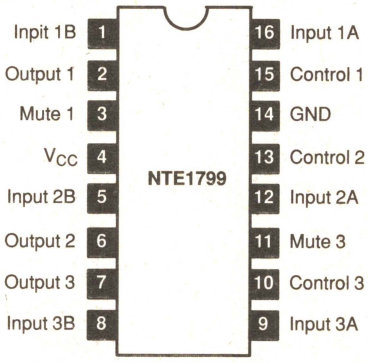

TV Multiplex Sound Decoder, V_{CC} = 12V Typ — **30–Lead DIP, See Diag. 536**

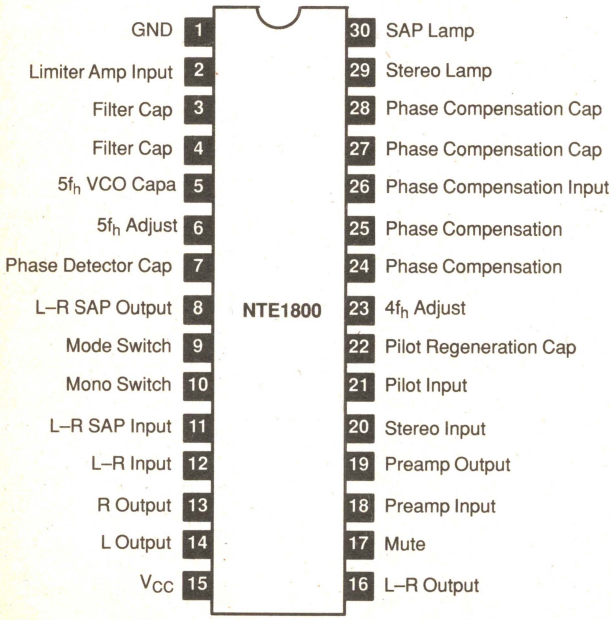

TV dbx Noise Reduction System, V_{CC} = 12V Typ — **28–Lead DIP, See Diag. 457**

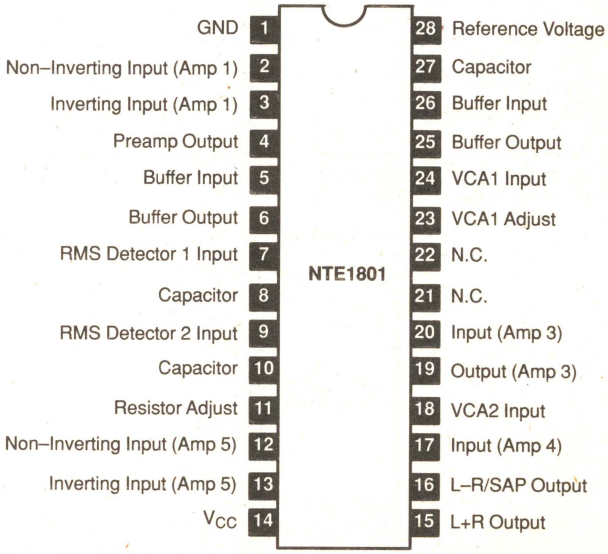

See Diagrams, beginning on Page 1–252

Stereo Audio Control, V_{CC} = 12V Typ — **18–Lead DIP, See Diag. 287**

NTE1803

Volume Control	1	18	GND
Bypass	2	17	Reference Control Voltage
V_{CC}	3	16	Balance Control
Rt Ch Input	4	15	LT Ch input
Rt Ch Bass Capacitor	5	14	Lt Ch Bass Capacitor
Rt Ch Bass Capacitor	6	13	Lt Ch Bass Capacitor
Rt Ch Treble Capacitor	7	12	Lt Ch Treble Capacitor
Rt Ch Output	8	11	Lt Ch Output
Bass Control	9	10	Treble Control

Vertical Deflection for Large Screen TV, V_{CC} = 40V Max — **13–Lead SIP, See Diag. 466**

NTE1804 Front View

13	OSC Capacitor
12	50Hz/60Hz Switching Voltage
11	Sawtooth Capacitor
10	Reference Voltage
9	V_{CC}
8	GND
7	Flyback Gererator Output
6	Output
5	Output Stage Supply Input
4	Preamp Input
3	Sawtooth Generator Output
2	Sync Input/Blanking Output
1	OSC Adjust

Recording Video Signal Processing Circuit for VCR, V_{CC} = 5V Typ — **28–Lead DIP, See Diag. 457**

NTE1805

Sync Tip Level Detect	1	28	FM Output
Sync Output	2	27	White Clip Level Adjust
EE Level Adjust	3	26	Mod
Video Signal Input during Recording	4	25	Mod
AGC Detector	5	24	Dark Clip Level Adjust
Video Signal Input during Playback	6	23	Mod Input
Sub Clamp Detector	7	22	FB Amp Input
Sub Clamp Output	8	21	Main Emphasis Output
GND	9	20	V_{CC}
EE/VV Output	10	19	Main Clamp Input
Dummy Sync Pulse Input	11	18	PG Input and 2/4/6Hr Select
PB Chroma Input	12	17	Non–Linear Emphasis Sub Side Input
Noise Canceller L.P.F.	13	16	12dB Amp Output
Noise Canceller H.P.F. Side Input	14	15	12dB Amp Input

Playback Video Processor for VCR, V_{CC} = 5V — **28–Lead DIP, See Diag. 457**

NTE1808

Video Output	1	28	DOC Pulse Output
Picture Control	2	27	Envelop DET
De–Emphasis	3	26	RF Input
Peaking	4	25	RF Output
Extension	5	24	1H Delay RF Input
Relative Detecting Pulse Output	6	23	V_{CC}
Line N.C. LIM Output	7	22	Double LIM H.P.F. Input
V_{CC} (Record)	8	21	Double LIM H.P.F. Input
Line N.C. LIM Input	9	20	GND
Differential Signal Input	10	19	LIM
Differential Signal Output	11	18	LIM
Limited Signal Input	12	17	DEM Gain Control
Video Input	13	16	DEM Output
Video (1H DL) Input	14	15	DEM (1H DL) Output

Capstan, Direct Drive, Motor Drive Circuit for VCR, V_{CC} = 6V — **24–Lead DIP, See Diag. 444**

NTE1809

Drive Output 3	1	24	Motor Power
Total Current Output	2	23	Drive Output 1
Drive Output 4	3	22	Phase Compensation for Current Feedback
Generation Brake	4	21	GND
Hall Element 3 (–) Input	5	20	Current Detection
Hall Element 3 (+) Input	6	19	Torque Limit
Hall Element 2 (–) Input	7	18	Phase Compensation for Current Feedback
Hall Element 2 (+) Input	8	17	Ripple Cancel Control Input
Hall Element 1 (–) Input	9	16	Torque Order Input
Hall Element 1 (+) Input	10	15	Reference Voltage Input
Rotation Direction Order Input	11	14	Hall Element Supply Input
Rotation Direction Input	12	13	V_{CC}

Color TV Video System, V_{CC} = 12V Typ — **28–Lead DIP, See Diag. 457**

NTE1810

GND	1	28	SIF Coil
IF Input	2	27	SIF Coil
IF Input	3	26	Sound Output
V_{CC}	4	25	Sound Output Level Adjust
IF AGC Filter	5	24	SIF Input Bias
RF AGC Delay Adjust	6	23	SIF Input
RF AGC Output	7	22	SIF Input Bias
Lock Detect Filter	8	21	GND
AFC Coil	9	20	Video f Character Compensation
AFC Output	10	19	Video Output
APC Filter Switch	11	18	Video Input
V_{CC} (VCO)	12	17	Detector Output
APC Filter	13	16	VCO Coil
GND (VCO)	14	15	VCO Coil

See Diagrams, beginning on Page 1–252

Cylinder Interface Circuit for VCR, V_{CC} = 6V Max **18–Lead DIP, See Diag. 287**

NTE1811

PB Control Output	1	18	GND
PB Control Clamp Input	2	17	Cylinder PG Input
PB Control Amp Output	3	16	Cylinder PG Input
Forward/Reverse Select	4	15	PG Control
1/2 V_{CC}	5	14	Head Switch Output
Control Signal	6	13	Tracking Monostable Multivibrator Continuous
GND	7	12	Tracking Monostable Multivibrator Output
Control Amp Feedback	8	11	V_{CC}
Rec/PB Select	9	10	1/2 V_{SS} Input

Capstan Interface Circuit for VCR, V_{CC} = 6V Max **20–Lead DIP, See Diag. 254**

NTE1812

Mode Select B	1	20	Mode Select A
GND	2	19	Cap FG Input
Mode Select C	3	18	V_{CC}
Mode Select x 1/2	4	17	Cap FG Output
PAL/NTSC Select	5	16	PB Control Input
B Output	6	15	FG Divide Select
A Output	7	14	Memory
Cap Error Input	8	13	Rec 2/4/6H Select
Reference Input	9	12	Rec/PB Select
OP Amp Input	10	11	Cap Error Output

Color Signal Processor for VCR, V_{CC} = 5V Typ **22–Lead DIP, See Diag. 458**

NTE1813

PB Chroma Input/ Rec Changeover Input	1	22	3.58MHz Chroma Input
ACC Burst Detector	2	21	ACC Output
ACC Reference	3	20	ACC Input
X'tal OSC Input	4	19	Killer Control
X'tal OSC Output	5	18	Main BM Input
Burst Gate Pulse Input	6	17	GND
Sub BM Output	7	16	PB Main BM Output
V_{CC}	8	15	X'tal APC Control
Sub BM Input	9	14	Chroma Output
2/4/6H Select	10	13	VCO Control
VCO Output	11	12	VCO Adjust

CMOS, Color Processing Circuit for VCR, V_{DD} = –0.3V to +8V **18–Lead DIP, See Diag. 449**

NTE1814

V_{DD}	1	18	Burst Gate Pulse Output
VCO Clock Input	2	17	Special PB Select Input
NTSC/PAL/SECAM Select Input (SCM)	3	16	Low Converting Color Subcarrier Wave Output
Horizontal Pulse Output	4	15	System Clear Input
NTSC/PAL/SECAM Select Input (PN)	5	14	Synchronizing Signal Input
Head Switch Pulse Input	6	13	Field Start Inhibit Pulse Output
Side Lock Detect Output	7	12	Burst Compensation Error Pulse Input
V_{SS}	8	11	Rec/PB Select Input
Phase Comparator Output	9	10	Burst Compensation Pulse Output

AF PO, 20W, Dual Power Supply, V_{CC} = ±23V Typ **15–Lead SIP, See Diag. 545**

NTE1815 Front View

15	Bootstrap
14	(+) V_{CC}
13	Output
12	(–) V_{CC}
11	Compensation
10	I Adjust
9	Emitter Bypass
8	Compensation
7	I Adjust
6	Test Point
5	Bypass
4	Bias
3	Substrate
2	NFB
1	Input

Dual, AF PO, 6W/Ch, Dual Power Supply, V_{CC} = ±13.2V Typ **18–Lead SIP, See Diag. 546**

NTE1816 Front View

18	Rt Ch Input (–)
17	Rt Ch Input (+)
16	GND
15	Compensation
14	(–) V_{CC}
13	Rt Ch Output
12	Bypass
11	(+) V_{CC}
10	Lt Ch Output
9	(–) V_{CC}
8	Compensation
7	Compensation
6	Muting
5	Compensation
4	Compensation
3	Compensation
2	Lt Ch Input (+)
1	LT Ch Input (–)

See Diagrams, beginning on Page 1–252

Dual, AF PO, 20W/Ch, 18–Lead SIP, See Diag. 546
Dual Power Supply, V_{CC} = ±23V Typ

NTE1817
Front View

18	Input 2
17	NFB 2
16	GND
15	I Bias 2
14	Power GND 2
13	Output 2
12	Bootstrap
11	(+) V_{CC}
10	Output 1
9	Power GND 1
8	Mute t Cap
7	Mute Adjust
6	Muting
5	I Bias 1
4	Feedback
3	GND 1
2	NFB 2
1	Input 2

Dual, AF PO, 25W/Ch, 18–Lead SIP, See Diag. 546
Dual Power Supply, V_{CC} = ±26V Typ

NTE1818
Front View

18	Rt Ch Input (–)
17	Rt Ch Input (+)
16	GND
15	Compensation
14	(–) V_{CC}
13	Rt Ch Output
12	Bypass
11	(+) V_{CC}
10	Lt Ch Output
9	(–) V_{CC}
8	Compensation
7	Compensation
6	Muting
5	Compensation
4	Compensation
3	Compensation
2	Lt Ch Input (+)
1	LT Ch Input (–)

Dual, AF PO, 30W/Ch, 18–Lead SIP, See Diag. 546
Dual Power Supply, V_{CC} = ±27.5V Typ

NTE1819
Front View

18	Input 2
17	NFB 2
16	GND
15	I Bias 2
14	Power GND 2
13	Output 2
12	Bootstrap
11	(+) V_{CC}
10	Output 1
9	Power GND 1
8	Mute t Cap
7	Mute Adjust
6	Muting
5	I Bias 1
4	Feedback
3	GND 1
2	NFB 2
1	Input 2

Dual, AF PO, 30W/Ch, Dual Power Supply, V_{CC} = ±43V Max — **16–Lead SIP, See Diag. 232**

NTE1820

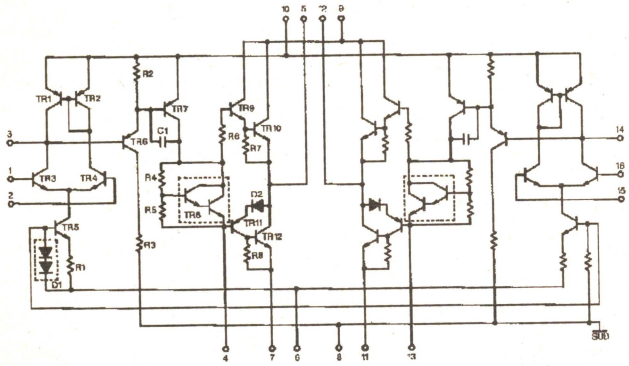

3 Output Voltage Regulator for VCR — **10–Lead SIP, See Diag. 464**

NTE1822
Front View

10	GND
9	V_{IN} (DC) 1
8	IB 1 Input
7	V_O 1 (12V @ 1.5A)
6	V_{IN} (DC) 1
5	IB 2 Input
4	V_O 2 (12V @ 1.5A)
3	V_{IN} (DC) 2
2	Cutoff
1	V_O 3 (5.3V @ 0.5A)

4 Output Voltage Regulator for VCR — **12–Lead SIP, See Diag. 495**

NTE1823
Front View

12	GND
11	V_{IN} (DC) 1
10	V_B
9	V_O 1 (12V @ 1.5A)
8	V_{IN} (DC) 1
7	V_B
6	V_O 2 (12.2V @ 1A)
5	V_O 3 ON/OFF
4	V_O 3 (12.1V @ 1A)
3	V_O 4 (5.3V @ 1A)
2	V_{IN} (DC) 2
1	V_O 4 Adjust

DC Pulse Motor Driver for VCR, V_{CC} = 20V Max — **7–Lead SIP, See Diag. 464**

NTE1824

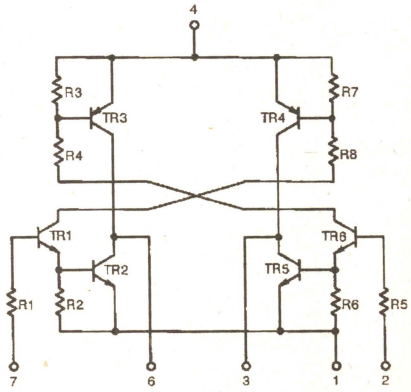

See Diagrams, beginning on Page 1–252

Dual, DC Motor Driver, V_{CC} = 12V Typ — 16–Lead SIP, See Diag. 497

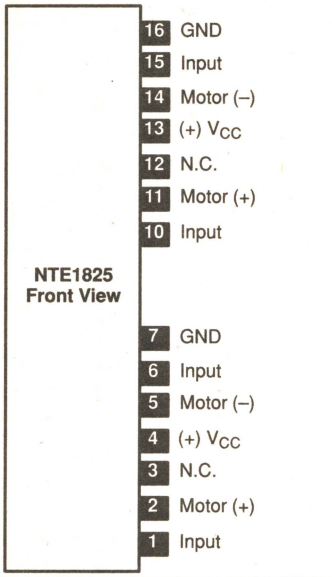

3 Input Switch w/Mute for VCR, V_{CC} = 14V — 9–Lead SIP, See Diag. 442

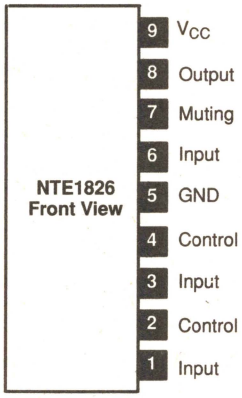

VIF and SIF Circuit for TV/VCR, V_{CC} = 12V — 20–Lead DIP, See Diag. 339

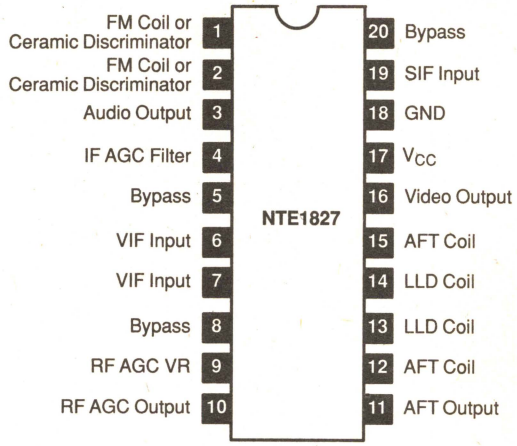

Quad Transistor Array, 10KΩ — 9–Lead SIP, See Diag. 326

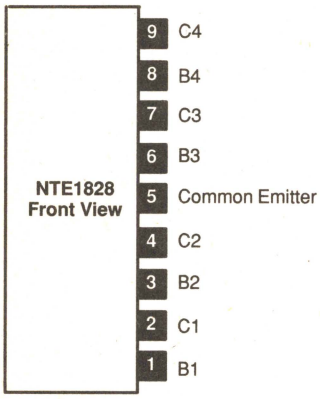

Quad Transistor Array, 5KΩ — 9–Lead SIP, See Diag. 326

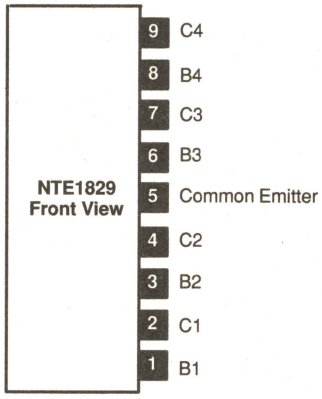

Dual, Audio Power Amp, 5.8W (19W BTL), V_{CC} = 13.2V Typ — 12–Lead SIP, See Diag. 470

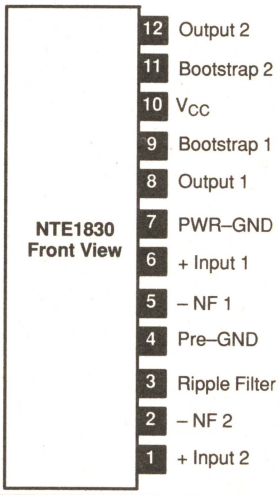

Dual, Audio Power Amp, 5.8W (19W BTL), V_{CC} = 13.2V Typ — 12–Lead SIP, See Diag. 470

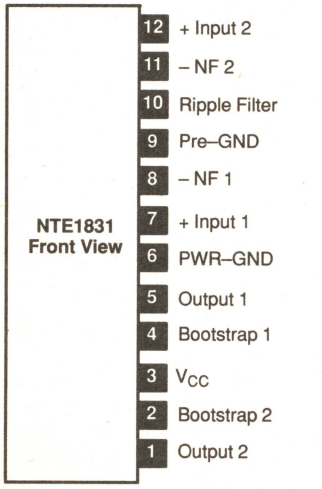

Audio Power Amp, 12W BTL, V_{CC} = 13.2V Typ — 7–Lead SIP, See Diag. 496

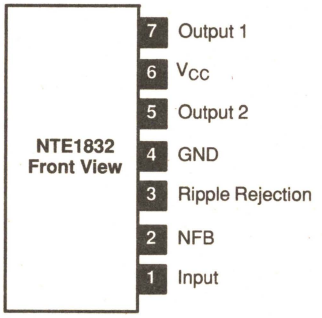

Dolby® B Type Noise Reduction System, V_{CC} = 12V Typ — 18–Lead DIP, See Diag. 287

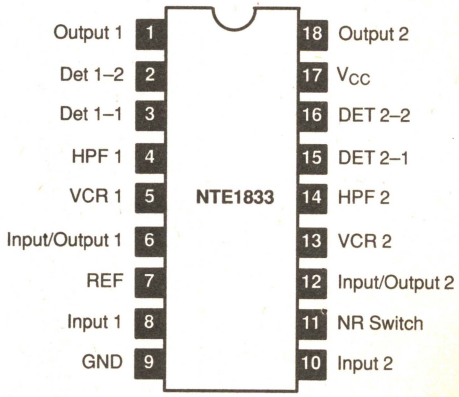

See Diagrams, beginning on Page 1–252

Dual Reversible Motor Driver, V_{CC} = 12V Typ — **10–Lead SIP, See Diag. 240**

NTE1834 Front View

10	Output 1
9	V_{CC} 2
8	V_R
7	V_{CC} 1
6	Input 3
5	Input 2
4	Input 1
3	Output 3
2	Output 2
1	GND

TV Interface for Character and Pattern, V_{CC} = 12V Typ — **22–Lead DIP, See Diag. 337**

NTE1835

V_{CC}	1	22	R_{TX} Input
Pedestal Clamp Filter	2	21	$(R–Y)_{TV}$ Input
Contrast Control	3	20	R Output
Blanging Pulse Input	4	19	G_{TX} Input
Shadon Input	5	18	$(G–Y)_{TV}$ Input
Clamp Pulse Input	6	17	G Output
R_{TX} Adjust	7	16	B_{TX} Input
R_{TX} Adjust	8	15	$(B–Y)_{TV}$ Input
Brightness Control	9	14	B Output
Y Output	10	13	GND
Y_{TV} Input	11	12	TX/TV Change Input

Frequency Synthesizer for TV/VCR, V_{CC} = 12V Typ — **20–Lead DIP, See Diag. 339**

NTE1836

Sync Separator	1	20	LPF
FBP	2	19	OP Amp Input
AFT	3	18	GND
Output 1	4	17	Bandswitch Output F4
Output 2	5	16	Bandswitch Output F3
Bandswitch Input B	6	15	Bandswitch Output F2
Bandswitch Input A	7	14	Bandswitch Output F1
+ 5V Output	8	13	V_{CC} 1
$\overline{RST}$ Output	9	12	Output to TV
V_{CC} 2	10	11	PLL Input

TV Tuner Controller, V_{CC} 1 = 12V Typ, V_{CC} 3 = 35V Max — **16–Lead DIP, See Diag. 248**

NTE1837

V_{CC} 2	1	16	V_{CC} 1
Band Select Input A	2	15	F1 Output to Tuner
Band Select Input B	3	14	F2 Output to Tuner
Band Select Input C	4	13	F3 Output to Tuner
GND	5	12	F4 Output to Tuner
V_{CC} 3	6	11	Switch Output to Tuner
Inverter Input	7	10	OP Amp Output
Inverter Output	8	9	OP Amp Input

Video/Chroma/Deflection Circuit for Large Screen TV, V_{CC} = 12V Typ — **30–Lead DIP, See Diag. 536**

NTE1838

Color Control	1	30	Chroma Amp Input
Video Input	2	29	ACC Filter
Brightness Control	3	28	GND
Delay Input	4	27	Sync Separator
Contrast Control	5	26	Burst Gate Pulse
Clamp Filter	6	25	Vert Sync Separator
Brightness Control	7	24	Ramp Generator
Y Output	8	23	Vertical Driver Output
R–Y	9	22	Horizontal/V_{CC}
G–Y	10	21	AFC
B–Y	11	20	Horizontal OSC
Color Killer	12	19	Horizontal OSC X'tal
Tint Control	13	18	X'Ray Protect Input
VCO	14	17	Horizontal Pre–Drive Output
Filter	15	16	V_{CC}

TV Fixed Voltage Regulator, V_O = 120V @1A — **5–Lead SIP, See Diag. 453**

NTE1839 Front View

5	Blank
4	Output
3	Input
2	Base
1	Common (–)

TV Fixed Voltage Regulator, V_O = 41.8V @ 2A — **5–Lead SIP, See Diag. 453**

NTE1840 Front View

5	V_O Continuous
4	GND (E)
3	Input (C)
2	Base Drive (–)
1	V_{OUT} Sense (–)

See Diagrams, beginning on Page 1–252

FM/AM IF System, V_{CC} = 15V Typ — **16–Lead DIP, See Diag. 248**

NTE1842

AM Mix Input	1	16	AM Mix Output
AM Mix Bypass	2	15	FM IF Input
AM OSC	3	14	FM IF Bypass
Reg	4	13	AM IF Input
AM IF Output	5	12	AM IF Bypass
Meter Output	6	11	FM Detector
LED	7	10	V_{CC}
GND	8	9	Detector Output

FM Front End, V_{CC} = 5V Typ — **9–Lead SIP, See Diag. 213**

NTE1843 Front View

9	V_{CC}
8	OSC Output
7	OSC Input
6	Mixer Output
5	GND
4	Mixer Input
3	Tuning Coil
2	Bypass
1	RF Input

Motor Speed Regulator, V_{CC} = 12V Typ — **4–Lead SIP, See Diag. 476**

NTE1844

4	Motor
3	GND
2	R_T
1	V_{CC}

Color Video Chroma Deflection Circuit w/Peak Clip, V_{CC} = 12V Typ — **30–Lead DIP, See Diag. 536**

NTE1845

2nd BPA	1	30	1st BPA
Sharp Video	2	29	ACC
Soft Video	3	28	GND
Contrast	4	27	Sync Separator
Contrast VR	5	26	Burst Gate Pulse
Pedestal Clamp	6	25	Vertical Sync Separator
Brightness Control	7	24	Ramp Generator
Brightness VR	8	23	Vertical Sync Separator
R–Y	9	22	(+) B_H (110V)
G–Y	10	21	AFC
B–Y	11	20	(+) B_H
Color Killer	12	19	Horizontal OSC
Tint Control	13	18	X'Ray Protect Input
VCO	14	17	Horiz Pre–Drive Output
APC	15	16	V_{CC}

NTSC Single Chip Color TV Signal Processor, V_{CC} = 9V Typ — **52–Lead DIP, See Diag. 484**

NTE1846

Electronic Attenuator Control	1	52	RF AGC Output
FM Demodulator Coil	2	51	Video Detector Output
De–Emphasis Sound Direct I/O	3	50	AFT Output
Audio Driver Output	4	49	Luminance Control
Audio Negative Feedback Bypass	5	48	SIF Input
IF AGC Filter	6	47	AFT Coil
RF AGC Control	7	46	Video Detector Coil
GND	8	45	Video Detector Coil
VIF Input	9	44	Vertical Sync Separator Input
VIF Input	10	43	Sync Output
VIF, SIF V_{CC}	11	42	Horizontal Sync Separator Input
Horizontal V_{CC}	12	41	Pedestal Hold
AFC Filter	13	40	Video Input 1
AFC Flyback Pulse Input	14	39	Video Input 2
$32f_H$ OSC	15	38	Contrast Control
X–Ray Protect Input	16	37	Picture Quality Control
Vertical Sync Signal	17	36	Color Signal Input
Vertical OSC	18	35	GND
Sawtooth Wave Generator Capacitor	19	34	ACC Filter
Rated Current Pull Input	20	33	Killer Filter
Vertical AC/DC Feedback Input	21	32	APC Filter
Vertical Output	22	31	3.58MHz OSC
VCJ V_{CC}	23	30	Color Saturation Control
Horizontal Pre–Drive Output	24	29	G–Y Demod Output
Tint Control	25	28	B–Y Demod Output
Video Output	26	27	R–Y Demod Output

Tuner for TV/VCR, V_{CC} = 9V Typ — **30–Lead DIP, See Diag. 536**

NTE1847

RF AGC Output	1	30	Video Input
Video Negative Feedback	2	29	Lock Detector Output
Equalizer Output	3	28	Video Output
RF AGC Delay	4	27	AFT Coil
V_{CC} (VIF)	5	26	AFT Coil
IF AGC Filter	6	25	APC Filter
IF AGC Filter	7	24	GND (VCO)
IF Input	8	23	VCO Coil
IF Input	9	22	VCO Coil
GND	10	21	V_{CC} (VCO)
SIF Detector Input	11	20	Lock Detector Filter
V_{CC} (SIF)	12	19	Audio Output
Limiter Input	13	18	Limiter Output
Bypass	14	17	FM Detector Input
SIF Detector Output	15	16	AFT Output

See Diagrams, beginning on Page 1–252

Stepping Motor Driver, V_{CC} = 24V Typ — **18–Lead SIP, See Diag. 479**

NTE1848 Front View

18	V_{CC}
17	Output B $\overline{B}$
16	Output $\overline{B}$
15	Active High Input $\overline{B}$
14	Output B
13	Excitment Input B
12	GND
11	GND
10	Active High Input $\overline{A}$
9	Output $\overline{A}$
8	Excitment Input A
7	Output A
6	Output A $\overline{A}$
5	I_{CC}
4	I_{CC}
3	GND
2	I_{CC}
1	Filter

CMOS, TV Frequency Synthesizer for Tuning Systems, V_{DD} = 7V Typ — **16–Lead DIP, See Diag. 248**

NTE1849

V_{DD}	1	16	V_{SS}
QI	2	15	LFI
QO	3	14	PI3
CKO	4	13	PI2
LDI	5	12	PI1
TMO	6	11	PI0
N.C.	7	10	SCO
PDO	8	9	RCO

Audio Amplifier, 24W BTL, V_{CC} = 14V Typ — **13–Lead SIP, See Diag. 466**

NTE1851 Front View

13	Inverting Input 2
12	Non–Inverting Input 2
11	Standby Switching
10	V_{CC}
9	Output 2
8	Bootstrap 2
7	GND/Substrate
6	Bootstrap 1
5	Output 1
4	Loudspeaker Protection
3	Supply Voltage Ripple Rejection
2	Non–Inverting Input 1
1	Invert ing Input 1

Audio Power Amp w/DC Volume Control, 4W, V_{CC} = 18V Typ — **9–Lead SIP, See Diag. 507**

NTE1852 Front View

9	DC Control Amp GND
8	DC Control Amp Input
7	Control Voltage
6	DC Control Voltage
5	Power Amp Input
4	Bypass
3	V_{CC}
2	Power Amp Output
1	Power Amp GND

Dual Power OP Amp, V_{CC} = 24V or ±12V Typ — **8–Lead DIP, See Diag. 245**

NTE1854M

Output 1	1	8	Inverted Input 1
Supply Voltage	2	7	Non–Inverted Input 1
Output 2	3	6	Non–Inverted Input 2
GND	4	5	Inverted Input 2

Vertical Deflection Output Circuit w/Driver Circuit for TV Monitor, V_{CC} 1 = 12V Typ, V_{CC} 7 = 24V Typ — **13–Lead SIP, See Diag. 478**

NTE1855 Front View

13	Ripple Filter
12	Power Supply for Vertical Output
11	Vertical Output
10	GND
9	OSC Blocking
8	Pump–Up Output
7	V_{CC} 7
6	AC/DC Feedback to Vertical Output Section
5	Ramp Waveform Generator
4	50/60Hz Vertical Size Control Signal Input
3	Vertical Height Control
2	Vertical Trigger Input
1	V_{CC} 1

See Diagrams, beginning on Page 1–252

Video/Chroma/Deflection Circuit w/Peak Clip Circuit for Small Screen TV, V_{CC} = 12V Typ — **30–Lead DIP, See Diag. 536**

NTE1856

Color Control	1	30	Chroma Amp Input
Video Input	2	29	ACC Filter
Sharpness Control	3	28	GND
Delay Input	4	27	Sync Separator
Contrast Control	5	26	Burst Gate Pulse
Clamp Filter	6	25	Vertical Sync Separator
Brightness Control	7	24	Ramp Generator
Y Out	8	23	Vertical Driver Output
R–Y	9	22	Horizontal V_{CC}
G–Y	10	21	AFC
B–Y	11	20	Horizontal OSC
Color Killer	12	19	Horizontal OSC X'tal
Tint Control	13	18	X'Ray Protect Input
VCO	14	17	Horizontal Pre–Drive Output
Filter	15	16	V_{CC}

Stepper Motor Driver, V_M = 12V Typ — **16–Lead DIP, See Diag. 248**

NTE1857

V_D	1	16	V_M
L2	2	15	L3
L1	3	14	L4
GND	4	13	GND
GND	5	12	GND
$\overline{BIAS}$/SET	6	11	$\overline{PHASE\ A}$
CLK	7	10	$\overline{CW}$/CCW
OIC	8	9	$\overline{FULL}$/HALF STEP

Vertical Deflection Circuit, V_S = 35V Max — **11–Lead SIP, See Diag. 310**

NTE1858 Front View

11	Flyback Generator
10	V_S
9	Inverting Input
8	Buffer Output
7	Ramp Generator
6	GND
5	N.C.
4	Height Adjust
3	Trigger Input
2	Output Stage V_S
1	Power Output

US TV Audio Multiplexing System, V_{CC} = 17V — **42–Lead DIP, See Diag. 454**

NTE1860

MPX Input	1	42	V_{CC}
N.C.	2	41	(L+R) Switch Input
Stereo Filter Adjust	3	40	(L+R) Detector Output
SAP Filter Adjust	4	39	TP
Bias	5	38	N.C.
SAP BPF Output	6	37	Stereo LPF Output
N.C.	7	36	Phase Det (+)
SAP Detector Input	8	35	Phase Det (–)
Reg Out 6.7V	9	34	Stereo Input
SAP VCO Adjust	10	33	Stereo GND
Car Det	11	32	ST VCO Adjust
SAP GND	12	31	Pilot Det (+)
SAP SQU Inhibit	13	30	Pilot Det (–)
SAP Mute	14	29	L+R Output
Mute	15	28	Matrix L+R Input
MS 1	16	27	Matrix L+R/SAP Input
MS 0	17	26	SAP Switch Input
SAP Ind Drive	18	25	SAP Det Output
Stereo Ind Drive	19	24	(L+R) SAP Output
Forced Monaural	20	23	Line Output L
LED GND	21	22	Line Output R

TV dbx Noise Reduction System, V_{CC} = 17V Max — **16–Lead DIP, See Diag. 248**

NTE1859

VE TC	1	16	VE WGT
Detector Input	2	15	VE Input
REF	3	14	VE INT
Time	4	13	VE Output
VCA TC	5	12	VCA Input
VCA WGT	6	11	VCA FB
V_{CC} 2	7	10	VCA Output
GND	8	9	V_{CC} 1

See Diagrams, beginning on Page 1–252

TV Video IF Processor, V_{CC} = 12V Typ — **28–Lead DIP, See Diag. 445**

NTE1861

GND	1	28	SIF Coil
IF Input	2	27	SIF Coil
IF Input	3	26	Sound Output
V_{CC}	4	25	Sound Output Level Adjust
IF AGC Filter	5	24	SIF Input Bias
RF AGC Delay Adjust	6	23	SIF Input
RF AGC Output	7	22	SIF Input Bias
Lock Det Filter	8	21	GND
AFC Coil	9	20	AGC Defeat
AFC Output	10	19	Video Output
APC Filter Switch	11	18	Video Input
V_{CC} (VCO)	12	17	Det. Output
APC Filter	13	16	VCO Coil
GND (VCO)	14	15	VCO Coil

Single Chip Signal Processor for Color TV, V_{CC} = 9V Typ — **42–Lead DIP, See Diag. 454**

NTE1863

De–Emphasis	1	42	Video Det
Mute	2	41	Video Det
NFB	3	40	AGC Output
AF Out	4	39	Att Limiter
VIF SIF GND	5	38	APT Output
VIF Input	6	37	AFT
VIF Input	7	36	Video Output
RF AGC	8	35	Vertical Stop
VIF SIF V_{CC}	9	34	Chroma VR
AGC Filter	10	33	Contrast
Video Chroma Sync Vertical V_{CC}	11	32	Contrast
Killer Filter	12	31	Video Tone Input/VR
Tint	13	30	Clamp Filter
X'tal	14	29	Brightness Control
APC Filter	15	28	Video Chroma Jungle GND
R–Y Out	16	27	Vertical Output
G–Y Out	17	26	Sync Separator Input
B–Y Out	18	25	Horizontal V_{CC}
–Y Out	19	24	Horizizontal OSC
High +B	20	23	X–Ray Protect
FBP	21	22	Horizontal Output

5 Point LED VU Scale Bar Level, V_{CC} = 12V Typ — **9–Lead SIP, See Diag. 223**

NTE1866 Front View

9	V_{CC}
8	Input
7	Amp Output
6	D5
5	GND
4	D4
3	D3
2	D2
1	D1

Hybrid TV Voltage Regulator, V_O = 12V Typ, I_O = 2A Max — **5–Lead SIP, See Diag. 499**

NTE1867 Front View

5	Input
4	Output Voltage Detection
3	GND
2	Fixed Voltage Adjust
1	Switching Output/Case

Hybrid TV Voltage Regulator, V_O = 13V Typ, I_O = 2A Max — **5–Lead SIP, See Diag. 499**

NTE1868 Front View

5	Input
4	Output Voltage Detection
3	GND
2	Fixed Voltage Adjust
1	Switching Output/Case

Color TV Switching Regulator, V_{CC} = 115V Typ — **15–Lead SIP, See Diag. 486**

NTE1870 Front View

15	TR5 Collector (Internal)
14	TR5 Collector (Internal)
13	No Pin
12	No Pin
11	TR5 Emitter (Internal)
10	TR5 Base (Internal)
9	Constant Current Base Drive
8	Voltage Compensation
7	Constant Current Base Driver Control
6	Constant Current Base Driver Control
5	Current Feedback for Overcurrent Protection
4	Power Supply for Control Voltage Set Up
3	Voltage To Set Up An Output Voltage
2	Soft Start/Output Voltage Setting
1	Control Circuit GND

See Diagrams, beginning on Page 1–252

Dual, AF PO, 50W/Ch, 18–Lead SIP, See Diag. 546
Dual Power Supply, V_{CC} = ±52.5V Max

NTE1871 Front View

18	Input 2
17	NFB 2
16	GND
15	Input Bias 2
14	Power GND 2
13	Output 2
12	Bootstrap
11	V_{CC}
10	Output 1
9	Power GND
8	Mute t Cap
7	Mute Adjust
6	Mute
5	Input Bias 1
4	Feedback
3	GND 1
2	NFB 1
1	Input 1

4 Output Voltage Regulator for VCR **15–Lead SIP, See Diag. 545**

NTE1872 Front View

15	GND
14	Switch 2
13	V_{IN} (DC) 2
12	Switch 1
11	V_O 1 (15V @ 1A)
10	V_B 3
9	V_{IN} (DC) 2
8	V_B 2
7	V_O 2 (5.8V @ 0.5A)
6	V_{IN} (DC) 1
5	V_B 1/Switch 2
4	V_O 3 (12V @ 1A)
3	V_O 4 (5.1V @ 1A)
2	V_{IN} (DC) 2
1	GND

2 Input Switch for VCR, 7–Lead SIP, See Diag. 214
V_{CC} = 9V Typ

NTE1873 Front View

7	V_{CC}
6	Output
5	Control
4	GND
3	Input 2
2	GND
1	Input 1

Dual, AF PO, 15W/Ch, 18–Lead SIP, See Diag. 546
Dual Power Supply, V_{CC} = ±20V Typ

NTE1874 Front View

18	Rt Ch Input (–)
17	Rt Ch Input (+)
16	GND
15	Compensation
14	V_{CC} (–)
13	Rt Ch Output
12	Bypass
11	V_{CC} (+)
10	Lt Ch Output
9	V_{CC} (–)
8	Compensation
7	Compensation
6	Muting
5	Compensation
4	Compensation
3	Compensation
2	Lt Ch Input (+)
1	Lt Ch Input (–)

Dual, AF PO, 30W/Ch, 16–Lead SIP, See Diag. 232
Dual Power Supply, V_{CC} = ±30V Typ

NTE1875 Front View

16	Input B
15	V_{CC} (+)
14	Feedback B
13	Output B
12	Feedback B
11	V_{CC} (–)
10	Input B
9	N.C.
8	N.C.
7	Input A
6	V_{CC} (–)
5	Feedback A
4	Output A
3	Feedback A
2	V_{CC} (+)
1	Input A

4 Output Voltage Regulator for VCR **15–Lead SIP, See Diag. 545**

NTE1876 Front View

15	Bypass
14	Bypass
13	ON/OFF
12	GND
11	IB 2
10	V_O 2 (9.5V @ 1.5A)
9	V_O 1 (13V @ 1.5A)
8	V_O 1 (13V @ 1.5A)
7	V_{IN} (DC) 1
6	V_O 3 (12V @ 1.5A)
5	V_{IN} (DC) 2
4	Bypass
3	V_O 3 (12V @ 1.5A)
2	N.C.
1	V_O 4 (6V @ 0.5A)

See Diagrams, beginning on Page 1–252

Dual, AF PO, 28W/Ch, 18–Lead SIP, See Diag. 546
Dual Power Supply, V_{CC} = 35V Typ

NTE1877 Front View

18	N.C.
17	Mute Output
16	Mute t Cap
15	Input 2
14	NFB 2
13	GND 2
12	Power GND 2
11	Output 2
10	Feedback 2
9	Bootstrap
8	Substrate
7	V (+)
6	Feedback 1
5	Output 1
4	Power GND 1
3	GND 1
2	NFB 1
1	Input 1

Dual, AF PO, 15W/Ch, 15–Lead SIP, See Diag. 545
Dual Power Supply, V_{CC} = ±30V

NTE1879 Front View

15	Rt Ch Input (+)
14	Rt Ch Input (–)
13	Bypass
12	Feedback
11	Rt Ch Output
10	Rt Ch (–) V_{CC}
9	(+) V_{CC}
8	(+) V_{CC}
7	Lt Ch (–) V_{CC}
6	Lt Ch Output
5	Feedback
4	Bypass
3	GND
2	Lt Ch Input (–)
1	Lt Ch Input (+)

Dual, AF PO, 30W/Ch, 18–Lead SIP, See Diag. 546
Dual Power Supply, V_{CC} = ±27.5V Typ

NTE1880 Front View

8	GND
7	V_{IN} (DC) 1
6	GND/Cutoff Switch
5	V_O 1 (13V @ 1A)
4	V_B
3	V_{IN} (DC) 2
2	V_O 2 (6.05V @ 1A)
1	V_O 3 (5.1V @ 0.5A)

3 Output Voltage Regulator for VCR **12–Lead SIP, See Diag. 488**

NTE1881 Front View

12	N.C.
11	N.C.
10	GND
9	V_{IN} (DC) 1
8	I_B 1
7	V_O 1 (12V @ 1.5A)
6	V_{IN} (DC) 1
5	I_B 2
4	V_O 2 (12V @ 1.5A)
3	V_{IN} (DC) 2
2	Cutoff
1	V_O 3 (5.3V @ 1A)

3 Output Voltage Regulator for VCR **8–Lead SIP, See Diag. 485**

NTE1883 Front View

8	GND
7	V_{IN} (DC) 1
6	V_B
5	V_O 1 (12.1V @ 0.2A)
4	V_O 2 (12V @ 0.5A)
3	V_{IN} (DC) 2
2	Cutoff
1	V_O 3 (5.3V @ 0.5A)

3 Output Voltage Regulator for VCR **12–Lead SIP, See Diag. 488**

NTE1884 Front View

12	GND
11	N.C.
10	V_{IN} (DC) 1
9	V_B
8	V_O 1 (12.3V @ 1A)
7	V_{IN} (DC) 1
6	V_B
5	ON/OFF
4	V_O 2 (12.2V @ 1A)
3	V_O 3 (5.3V @ 1A)
2	V_{IN} (DC) 2
1	GND

4 Phase Stepping Motor Driver, 1.75A **18–Lead SIP, See Diag. 546**

NTE1885

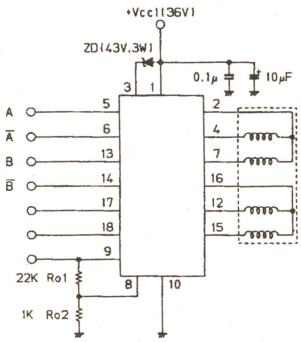

Horizontal and Vertical Deflection Circuit, **16–Lead DIP, See Diag. 249**
V_{CC} = 14V Typ

NTE1888

Frame OSC	1	16	V_{CC} 1
Flyback Generator Supply	2	15	Video Input
Frame Flyback	3	14	Line Output
GND	4	13	GND
GND	5	12	GND
INV Input	6	11	Line Flyback
Frame Power Supply	7	10	Phase Detector
Frame Output	8	9	Line OSC

See Diagrams, beginning on Page 1–252

NTSC Decoder for TV, V_{CC} = 12V Typ — **24–Lead DIP, See Diag. 252**

NTE1890

V_{CC}	1	24	Chroma Output
ACC Detector	2	23	GND
Chroma Input	3	22	OSC
Peak Detector	4	21	OSC Adjust
Decoup Cap	5	20	Hue Control
Saturation Control	6	19	Hue Control
Contrast Control	7	18	Reference Signal Phase Adjust
Sandcastle Pulse	8	17	Chroma Demod Input
Luminance Input	9	16	Black Level Clamp Output
Peaking Cap	10	15	Blue Output
Peaking Control	11	14	Green Output
Brightness Control	12	13	Red Output

3 Phase Brushless Motor Driver, V_{CC} 1 = 5V Typ, V_{CC} 2 = 15V Typ — **23–Lead SIP, See Diag. 492**

NTE1893 Front View

23	Hall Amp U Phase (+) Input
22	U Phase Output
21	Hall Amp U Phase (–) Input
20	V Phase Output
19	Hall Amp V Phase (+) Input
18	W Phase Output
17	Hall Amp V Phase (–) Input
16	Current Detect
15	Hall Amp W Phase (+) Input
14	Control Amp Feedback
13	Hall Amp W Phase (–) Input
12	GND
11	FG Amp (–) Input
10	FG Amp Output
9	FG Amp (+) Input
8	Phase Compensation
7	V_{CC} 1
6	Control Amp Reference
5	Control Amp Input
4	Neutral Point Feedback
3	Direction Select Input
2	Brake
1	V_{CC} 2

TV Fixed Voltage Regulator, V_O = 41.8V @ 1A — **5–Lead SIP, See Diag. 453**

NTE1894 Front View

5	Soft Start
4	GND (E)
3	Input (C)
2	Base Drive (B)
1	V_{OUT} Sense (–)

TV Fixed Voltage Regulator, V_O = 110V @ 1A — **5–Lead SIP, See Diag. 453**

NTE1895 Front View

5	V_{OUT} Adjust
4	GND
3	Input
2	Base Drive
1	Voltage Sensing

TV Fixed Voltage Regulator, V_O = 115V @ 1A — **5–Lead SIP, See Diag. 453**

NTE1896 Front View

5	Blank
4	Output
3	Input
2	Base
1	Common (–)

TV Fixed Voltage Regulator, V_O = 125V @ 1A — **5–Lead SIP, See Diag. 453**

NTE1897 Front View

5	Blank
4	Output
3	Input
2	Base
1	Common (–)

Dual, Audio Power Amp, 5.8W (22W BTL), V_{CC} = 13.2V Typ — **12–Lead SIP, See Diag. 470**

NTE1898 Front View

12	Output 1
11	Bootstrap 1
10	V_{CC}
9	Power GND
8	Bootstrap 2
7	Output 2
6	Ripple
5	Input 2
4	NF 2
3	Pre GND
2	NF 1
1	Input 1

Dual, Audio Power Amp, 5.8W (22W BTL), V_{CC} = 13.2V Typ — **12–Lead SIP, See Diag. 470**

NTE1899 Front View

12	Input 1
11	NF 1
10	Pre GND
9	NF 2
8	Input 2
7	Ripple
6	Output 2
5	Bootstrap 2
4	Power GND
3	V_{CC}
2	Bootstap 1
1	Output 1

See Diagrams, beginning on Page 1–252

Voltage Regulator, Adjustable — TO92, See Diag. 9q

NTE1900 (Positive)
NTE1901 (Negative)
(Flat Side Front)

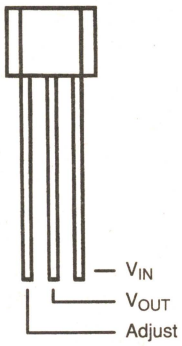

Positive Voltage Regulator — TO92, See Diag. 9l

NTE1902, NTE1906, NTE1908
(Flat Side Front)

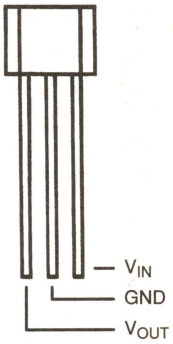

Negative Voltage Regulator — TO92, See Diag. 9p

NTE1903, NTE1905, NTE1907,
NTE1909, NTE1917
(Flat Side Front)

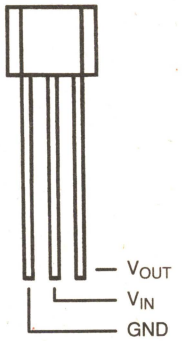

Negative Voltage Regulator, Adjustable — TO3, See Diag. 1d

NTE1911
Bottom View

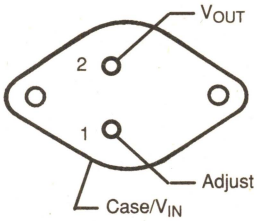

Positive Voltage Regulator — TO3, See Diag. 1c

NTE1912, NTE1914, NTE1916,
NTE1918, NTE1920, NTE1924
Bottom View

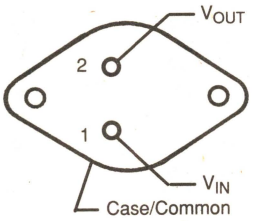

Negative Voltage Regulator — TO3, See Diag. 1e

NTE1913, NTE1915, NTE1919,
NTE1923, NTE1925
Bottom View

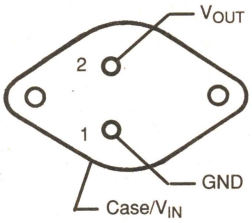

4–Terminal Negative Voltage Regulator, Adjustable — TO3, See Diag. 414b

NTE1927
Bottom View

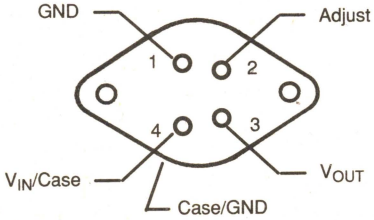

Negative Voltage Regulator — TO3, See Diag. 1e

NTE1928
Top View

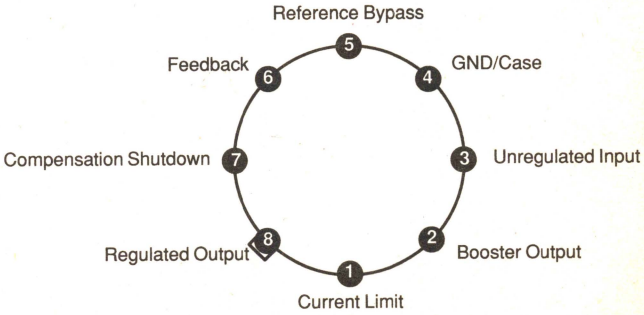

See Diagrams, beginning on Page 1–252

Positive Voltage Regulator, Adjustable — **8–Lead DIP, See Diag. 245**

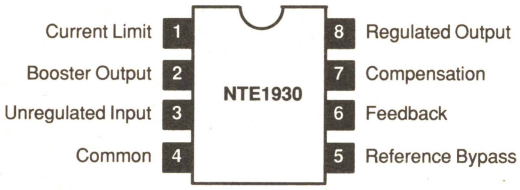

Positive Voltage Regulator — **TO92, See Diag. 9I**

NTE1932

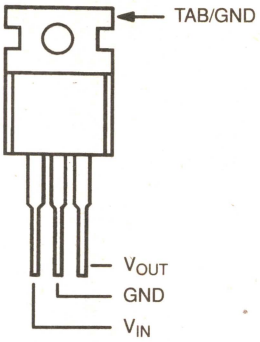

Positive Voltage Regulator — **TO3P, See Diag. 59b**

NTE1934, NTE1936, NTE1938, NTE1940

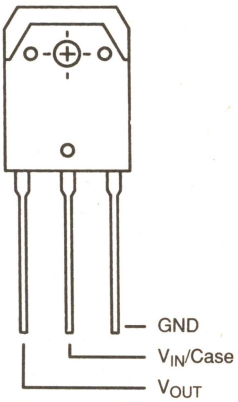

Positive Voltage Regulator — **TO3P, See Diag. 59c**

NTE1934X

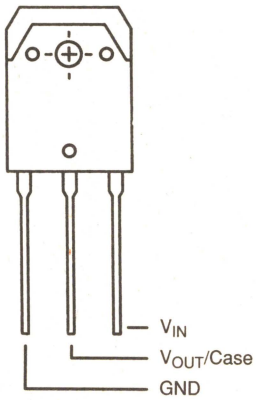

Positive Voltage Regulator, Adjustable — **5–Lead TO220, See Diag. 205**

NTE1942

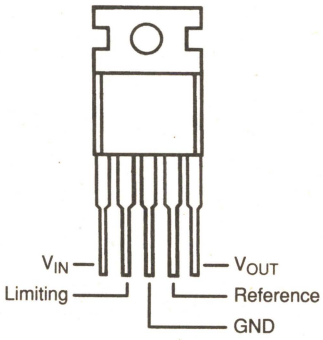

Dolby® B Type Noise Reduction System, V_{CC} = 16V — **16 + 2–Lead DIP, See Diag. 315**

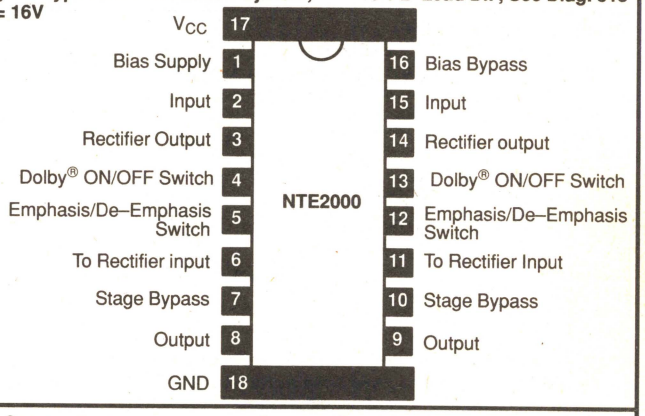

Dolby® B Type Noise Reduction System, V_{CC} = 24V — **16–Lead DIP, See Diag. 249**

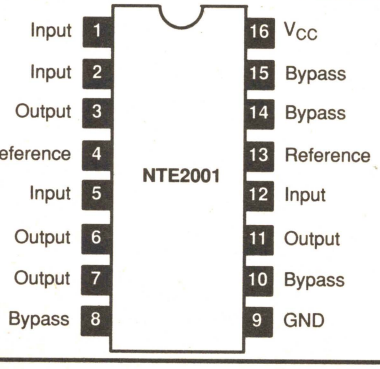

Dolby® Noise Reduction Processor, V_{CC} = 24V — **16–Lead DIP, See Diag. 338**

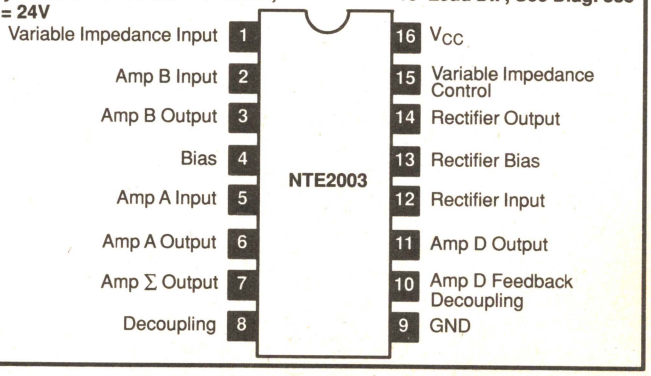

See Diagrams, beginning on Page 1–252

Dolby® Noise Reduction Circuit, V_{CC} = 24V — **16–Lead DIP, See Diag. 249**

NTE2004

C Input	1	16	V_{CC}
B Input	2	15	F Control
B Output	3	14	G Output
Reference	4	13	
A Input	5	12	D Input
A Output	6	11	C Output
Σ Output	7	10	D Filter
	8	9	GND

Audio Amp w/Muting, 5W, V_S = 14V Typ — **16–Lead DIP, See Diag. 248**

NTE7000

Output	1	16	GND
V_S	2	15	GND
Bootstrap	3	14	GND
Threshold	4	13	GND
Muting	5	12	GND
Inverting Input	6	11	GND
SVR	7	10	GND
Non–Inverting Input	8	9	GND

Horizontal Combination Circuit for Color TV and Computer Monitor, V_{CC} = 12V Typ — **16–Lead DIP, See Diag. 248**

NTE7001

V_{CC}	1	16	GND
Trigger Pulse Input	2	15	OSC Frequency Adjust
Line Pulse Output	3	14	OSC Cap Input
Pulse Duration Switch	4	13	Phase Detector 1
Phase Shifter	5	12	Time Constant Switch
FB Pulse Input	6	11	VCR Switch/ Coincidence Detector
Blank Pulse Output	7	10	Noise Separator
Vertical Sync Pulse Output	8	9	Video Input

Switched Mode Power Supply Control, V_{CC} = 15V Typ — **9–Lead SIP, See Diag. 489**

NTE7002 Front View

9	V_{CC}
8	Source Output
7	Sink Output
6	GND
5	Shut Down
4	Sawtooth Generator
3	Feedback
2	Zero Detection
1	Reference

Frequency Synthesizer for TV/VCR, V_{CC} = 12V Typ — **20–Lead DIP, See Diag. 339**

NTE7004

Sync Separator	1	20	LPF
FBP	2	19	OP Amp Input
AFT	3	18	GND
Output 1	4	17	Bandswitch Output F4
Output 2	5	16	Bandswitch Output F3
Bandswitch Input B	6	15	Bandswitch Output F2
Bandswitch Input A	7	14	Bandswitch Output F1
+ 5V Output	8	13	V_{CC} 1
$\overline{RST}$ Output	9	12	Output to TV
V_{CC} 2	10	11	PLL Input

Switch Mode Driver for DC Motors, V_{CC} = 24V Typ — **15–Lead SIP, See Diag. 542**

NTE7005

V_S 2/Phase 1	1	16	V_S 1/Phase 1
V_{CC}	2	15	Phase 1 Out
Phase 1 Direction	3	14	$\overline{\text{Phase}}$ 1 Out
GND	4	13	GND
GND	5	12	GND
Phase 2 Direction	6	11	$\overline{\text{Phase}}$ 2 Out
Power Save	7	10	Phase 2 Out
V_S 2/Phase 2	8	9	V_S 1/Phase 2

Control Circuit for TV/VCR, V_{CC} = 12V Typ — **30–Lead DIP, See Diag. 536**

NTE7007

VT Input	1	30	VZ/+31V
VOL Input	2	29	VT Output
AFS Switch	3	28	V_{CC} 3
Band Input 1	4	27	Band Output 1
Band Input 2	5	26	Band Output 2
RM Output	6	25	V_{CC} 1
F2	7	24	Band Output 3
PH	8	23	Band Output 4
T	9	22	VOL Output
GND 2	10	21	AFS
RM Input	11	20	GND 1
F1	12	19	RLY Control Output
RLY Control	13	18	AC Input
RST Output	14	17	Clock Output
+5V Output	15	16	V_{CC} 2

Switch Mode Driver for DC Motors, V_{CC} = 24V Typ — **15–Lead SIP, See Diag. 542**

NTE7006 Front View

15	Motor
14	R_S 2
13	Inhibit (CE1)
12	Inhibit ($\overline{CE2}$)
11	OSC (R)
10	OSC (C)
9	Output (Error Amp)
8	GND
7	Input (Error Amp)
6	Input
5	Output C.S.A.
4	Comp Input
3	(+) V_S
2	R_S 1
1	Motor

See Diagrams, beginning on Page 1–252

Color TV Video, Chroma, Deflection Circuit, V_{CC} = 12V Typ — **30–Lead DIP, See Diag. 536**

NTE7008

2nd BPA	1	30	1st BPA
Sharp Video Tone	2	29	ACC
Video Tone VR	3	28	GND
Contrast	4	27	Sync Separator
Contrast VR	5	26	Burst Gate Pulse
Pedestal Clamp	6	25	Vertical Sync Separator
Bright	7	24	Ramp Generator
Bright VR/(–)V_{OUT}	8	23	Vertical Driver
R–Y Output	9	22	+B High (110V)
G–Y Output	10	21	AFC
B–Y Output	11	20	Horizontal V_{CC}
Color Killer	12	19	Horiz OSC
Tint	13	18	X–Ray Protect
VCO	14	17	Horizontal Pre–Driver
Tint VR	15	16	V_{CC}

TV FM Multiplex Sound Decoder, V_{CC} = 12V — **36–Lead DIP, See Diag. 494**

NTE7014

VCO Adjust	1	36	V_{CC}
Phase Detection	2	35	Matrix L + R Input
Phase Detection	3	34	Matrix L – R Input
Stereo Signal Input	4	33	L Output
Pilot Cancel Input	5	32	R Outgput
L + R Detection Output	6	31	Inverter Output
L – R Detection Output	7	30	SAP Inverter Input
Pilot Cancel Wave Generation	8	29	Mute
Pilot Detection	9	28	SAP Amp Input
Pilot Detection	10	27	SAP Amp Output
Stereo Display	11	26	L – R/SAP Switch Output
Reference Voltage	12	25	Switch L – R Input
SAP Signal Input	13	24	Stereo Mode Display
SAP Detection Time Constant	14	23	Monaural Mode Display
SAP Detection Output	15	22	SAP Mode Displat
SAP Carrier Detection 1	16	21	Control Input
SAP Carrier Detection 2	17	20	GND
SAP carrier Level Detection	18	19	SAP Display

PLL (Phase Lock Loop) SIF and VIF for TV and VCR, V_{CC} = 9V Typ — **30–Lead DIP, See Diag. 536**

NTE7015

RF AGC Output (Reverse)	1	30	Video Input
Video Negative Feedback	2	29	Control Output
Equalizer Output	3	28	Video Output
RF AGC Delay	4	27	AFT Coil
V_{CC} (VIF)	5	26	AFT Coil
IF AGC Filter	6	25	APC Filter
GND (VIF)	7	24	GND (VCO)
IF Input	8	23	VCO Coil
IF Input	9	22	VCO Coil
GND (SIF)	10	21	V_{CC} (VCO)
SIF Det Input	11	20	Control Filter
V_{CC} (SIF)	12	19	Audio Output
Limiter Input	13	18	Limiter Output
Bypass	14	17	FM Detector Input
SIF Det Output	15	16	AFT Output

FM IF System, V+ = 12V Typ — **16–Lead DIP, See Diag. 258**

NTE7016

IF Input	1	16	Delayed AGC Control
Bypass	2	15	Delayed AGC Output
Bypass	3	14	Substrate
GND	4	13	Tuning Meter Output
Mute Input	5	12	Mute Output
Audio Output	6	11	V+
AFC Output	7	10	REF Bias
Quad Output	8	9	Quad Input

Digital Tuning System Interface for TV Systems, V_{CC} = 12V — **16–Lead DIP, See Diag. 472**

NTE7019

Band Input 1	1	16	Band Output 1
Band Input 2	2	15	Band Output 2
Video Input	3	14	Band Output 3
Flyback Pulse Input	4	13	Band Output 4
GND	5	12	V_{CC} 1
Channel Detection Filter	6	11	V_{CC} 2
Channel Detection Output (Active High)	7	10	V_Z
Error Amp Input	8	9	Error Amp Output

Audio Rec/PB Processor for VCR — **22–Lead DIP, See Diag. 458**

AT TIME OF PUBLICATION, DATA ON NTE7020, AN ACTIVE NUMBER, WAS NOT AVAILABLE

See Diagrams, beginning on Page 1–252

VIF & SIF Circuit for VCR, V_{CC} = 12V — **30–Lead DIP, See Diag. 536**

NTE15001

Ceramic Discriminator	1	30	Creamic Discriminator
De–Emphasis	2	29	Mute Attenuator
AF Input	3	28	Mute Switch
N.F.	4	27	Ceramic Filter
AF Output	5	26	SIF Input
GND	6	25	SIF Output
IF AGC Filter	7	24	SIF V_{CC}
Mute	8	23	VIF V_{CC}
VIF Input	9	22	Video Output
VIF Input	10	21	AFT Coil
Mute	11	20	LLD Coil
RF AGC VR	12	19	LLD Coil
RF AGC Output	13	18	AFT Coil
IF AGC Filter	14	17	AFT Coil
Sound Trap	15	16	Sound Trap

Color TV Vertical Deflection Output Circuit, V_{CC} = 24V — **7–Lead SIP, See Diag. 537**

NTE15002 Front View

7	Pump–Up Output
6	V_{CC} 1
5	OSC Blocking Pin
4	Input
3	Vertical Output Power Supply
2	Vertical Output
1	GND

PIF Subsystem for TV Receiver, V_{CC} = 15V — **16–Lead DIP, See Diag. 249**

NTE15003

IF Input	1	16	IF Input
Coupling Capacitor	2	15	Coupling Capacitor
RF/AGC Delay	3	14	AGC Filter
RF/AGC Output	4	13	GND
AFT 1	5	12	Video Output
AFT 2	6	11	V_{CC}
AFT Tank	7	10	AFT Tank
Video Tank	8	9	Video Tank

Remote Control Preamp for VCR, V_{CC} = 15V — **8–Lead SIP, See Diag. 224**

NTE15004 Front View

8	V_{CC}
7	Input
6	Bypass Capacitor
5	GND
4	Peak Hold Capacitor
3	Tuning Coil
2	Integral Capacitor
1	Output

AT TIME OF PUBLICATION, DATA ON NTE15005, AN ACTIVE NUMBER, WAS NOT AVAILABLE

US TV Audio Multiplexing System, V_{CC} = 17V — **42–Lead DIP, See Diag. 454**

NTE15007

MPX Input	1	42	V_{CC}
N.C.	2	41	(L+R) Switch Input
Stereo Filter Adjust	3	40	(L+R) Detector Output
SAP Filter Adjust	4	39	TP
Bias	5	38	N.C.
SAP BPF Output	6	37	Stereo LPF Output
N.C.	7	36	Phase Det (+)
SAP Detector Input	8	35	Phase Det (–)
Reg Out 6.7V	9	34	Stereo Input
SAP VCO Adjust	10	33	Stereo GND
Car Det	11	32	ST VCO Adjust
SAP GND	12	31	Pilot Det (+)
SAP SQU Inhibit	13	30	Pilot Det (–)
SAP Mute	14	29	L+R Output
Mute	15	28	Matrix L+R Input
MS 1	16	27	Matrix L+R/SAP Input
MS 0	17	26	SAP Switch Input
SAP Ind Drive	18	25	SAP Det Output
Stereo Ind Drive	19	24	(L+R) SAP Output
Forced Monaural	20	23	Line Output L
LED GND	21	22	Line Output R

Dual, Bi–Directional Motor Driver — **12–Lead DIP, See Diag. 447**

NTE15006

V_{CC} 1	1	12	V_Z 1
Input 2	2	11	Input 1
Output 2	3	10	Output 1
GND	Fin	Fin	GND
Output 3	4	9	Output 4
Input 3	5	8	Input 4
V_Z 2	6	7	V_{CC} 2

See Diagrams, beginning on Page 1–252

Color ACC Circuit for VCR, V_{CC} = 12V — **18–Lead DIP, See Diag. 287**

NTE15009

ACC Rec Input	1	18	ACC PB Input
Burst Detector	2	17	ACC Output
Burst Output	3	16	Signal Input
Burst Gate Pulse Input	4	15	GND
Chroma Select Burst 6dB Up/Down Select	5	14	Carrier Input
Output Amp PB Chroma Input	6	13	V_{CC}
Chroma Output	7	12	B.M. Output
Output Amp, Rec, Chroma Input C/B/W Select	8	11	Rec Current Select
PB Amp Output Rec/PB Select	9	10	PB Amp Input

Color AFC Circuit for VCR, V_{CC} = 13V — **18–Lead DIP, See Diag. 287**

NTE15010

Zener Voltage	1	18	HD Output for Burst Gate
V_{CC}	2	17	Linear Mono Multi
V_{SS} Output for V Sync	3	16	PCOM Filter
Sync Front Pulse Output	4	15	I^2L Injector
Low Pass Filter	5	14	VCO Control
Sync Separator Input	6	13	GND
White Clip Output	7	12	CW Output (603kHz)
Video Input	8	11	PG Input (Head Switch)
Rec/DOC Select	9	10	ID Input

TV Fixed Voltage Regulator, V_O = 135V @ 1A — **5–Lead SIP, See Diag. 538**

NTE15012 Front View

5	No Pin
4	Output
3	Common(–)
2	Base
1	Input/Case

TV VIF Amp, Phase Lock Loop (PLL), V_{CC} = 14.4V — **22–Lead DIP, See Diag. 540**

NTE15013

IF AGC Filter	1	22	Lock Detect Filter
RF AGC Delay Adjust	2	21	AFC Coil
RF AGC Output	3	20	AFC Coil
Input Bias	4	19	AFC Output
IF Input	5	18	APC Filter
IF Input	6	17	APC Filter Switch
Input Bias	7	16	GND (VCO)
GND	8	15	VCO Coil
V_{CC}	9	14	VCO Coil
Video Output	10	13	VCO Coil
Video input	11	12	Detector Output

Dual dbxII Noise Reduction System, V_{CC} = 14.4V — **22–Lead DIP, See Diag. 337**

NTE15014

Adjust	1	22	V_{CC}
GND	2	21	N.C.
RMS Input A	3	20	RMS Input B
Timing A	4	19	Timing B
CCA Input A	5	18	CCA Input B
CAP1 A	6	17	CAP1 B
CAP2 A	7	16	CAP2 B
V_{OUT} A	8	15	V_{OUT} B
ON/OFF A	9	14	ON/OFF B
NI	10	13	I Time
Decode	11	12	Encode

Video Chroma Deflection Circuit for Color TV, V_{CC} = 12V Typ — **30–Lead DIP, See Diag. 536**

NTE15015

2nd BPA	1	30	1st BPA
Sharp Video	2	29	ACC
Soft Video	3	28	GND
Contrast	4	27	Sync Separator
Contrast Control	5	26	Burst Gate Pulse
Pedestal Clamp	6	25	Vertical Sync Separator
Brightness Control	7	24	Ramp Generator
Y Output	8	23	Vertical Driver
R–Y	9	22	(+) B_H (110V)
G–Y	10	21	AFC
B–Y	11	20	(+) B_H
Color Killer	12	19	Horizontal OSC
Tint	13	18	X–Ray Protect
VCO	14	17	Horizontal Pre Driver
APC	15	16	(+) B_H (12V)

See Diagrams, beginning on Page 1–252

NTSC Chroma, Luminance, Sync, and Deflection Circuit, V_{CC} = 12V — **42–Lead DIP, See Diag. 553**

NTE15016

Pin	Left side	Pin	Right side
1	GND (Other Than Pin21)	42	Video Output
2	Chrominance Input	41	Brightness Control
3	Capacitor (ACC)	40	Sharpness (Secondary Differentiation) Input
4	Sharpness Control	39	Video Input
5	Color Control	38	Video Chrominance Output (Contrast)
6	GND	37	Video Chrominance Input
7	Color Killer Filter	36	Contrast Control
8	B–Y Output	35	Flyback Pulse Input
9	G–Y Output	34	Horizontal Blanking Pulse Input
10	R–Y Output	33	V_{CC} (Horizontal)
11	V_{CC} (Other Than Pin33)	32	Video Input (Sync Signal Separator)
12	Phase Filter	31	Horizontal Killer Filter
13	APC Filter (Chrominance)	30	Horizontal Killer Switch Output
14	Color VCO Filter	29	Horizontal VCO Filter
15	Color VCO Filter	28	Horizontal VCO Filter
16	Tint Control	27	Horizontal VCO Filter
17	Color VCO OSC	26	Low Pass Filter (f)
18	Vertical Feedback Input (DC)	25	Variable Phase Filter (Horizontal)
19	Vertical Feedback Input (AC)	24	Low Pass Filter (Ø)
20	Vertical Drive Output	23	Horizontal Predrive Output
21	GND (Horizontal, Vertical, Chrominance, OSC)	22	X–Ray Protect Input

Head Amp Circuit for VCR, V_{CC} = 5V — **18–Lead DIP, See Diag. 287**

NTE15017

Pin	Left side	Pin	Right side
1	V_{CC}	18	DOC Amp Input
2	PG Input	17	FM Output
3	Damping (1)	16	DOC Detect
4	FM Input (1)	15	DOC Pulse
5	GND	14	GND
6	FM Input (2)	13	DOC Input
7	Damping (2)	12	FM Equalizer
8	Reference Voltage	11	FM Output
9	AGC Detect	10	Chroma Output

TV Fixed Voltage Regulator, V_O = 115V @ 1A — **5–Lead SIP, See Diag. 538**

NTE15018 Front View

Pin	Side
5	No Pin
4	Output
3	Common (–)
2	Base
1	Input/Case

TV Fixed Voltage Regulator, V_O = 130V @ 1A — **5–Lead SIP, See Diag. 538**

NTE15019 Front View

Pin	Side
5	No Pin
4	Output
3	Common (–)
2	Base
1	Input/Case

TV Fixed Voltage Regulator, V_O = 125V @ 1A — **5–Lead SIP, See Diag. 538**

NTE15020 Front View

Pin	Side
5	No Pin
4	Output
3	Common (–)
2	Base
1	Input/Case

TV Fixed Voltage Regulator, V_O = 123V @ 1A — **5–Lead SIP, See Diag. 538**

NTE15021 Front View

Pin	Side
5	No Pin
4	Output
3	Common (–)
2	Base
1	Input/Case

AT TIME OF PUBLICATION, DATA ON NTE15022, AN ACTIVE NUMBER, WAS NOT AVAILABLE

TV dbx Noise Reduction System, V_{CC} = 17V Max — **16–Lead DIP, See Diag. 248**

NTE15023

Pin	Left side	Pin	Right side
1	VE TC	16	VE WGT
2	Detector Input	15	VE Input
3	REF	14	VE INT
4	Time	13	VE Output
5	VCA TC	12	VCA Input
6	VCA WGT	11	VCA FB
7	V_{CC} 2	10	VCA Output
8	GND	9	V_{CC} 1

See Diagrams, beginning on Page 1–252

Capstan, Direct Drive, Motor Drive Circuit for VCR, V_{CC} = 6V — **42–Lead DIP, See Diag. 553**

NTE15026

Drive Output 3	1	24	Motor Power
Total Current Output	2	23	Drive Output 1
Drive Output 4	3	22	Phase Compensation for Current Feedback
Generation Brake	4	21	GND
Hall Element 3 (–) Input	5	20	Current Detection
Hall Element 3 (+) Input	6	19	Torque Limit
Hall Element 2 (–) Input	7	18	Phase Compensation for Current Feedback
Hall Element 2 (+) Input	8	17	Ripple Cancel Control Input
Hall Element 1 (–) Input	9	16	Torque Order Input
Hall Element 1 (+) Input	10	15	Reference Voltage Input
Rotation Direction Order Input	11	14	Hall Element Supply Input
Rotation Direction Input	12	13	V_{CC}

3 Input Switch w/Mute for VCR, V_{CC} = 14V — **9–Lead SIP, See Diag. 442**

NTE15027 Front View

9	V_{CC}
8	Output
7	Muting
6	Input
5	GND
4	Control
3	Input
2	Control
1	Input

2 Channel Tone/DC Volume/Balance Control Circuit, V_{CC} = 14V — **12–Lead SIP, See Diag. 448**

NTE15029 Front View

12	Volume Control
11	Lt Ch Low Frequency Input
10	Lt Ch Output
9	Lt Ch Input
8	Treble Control
7	GND
6	Rt Ch Input
5	Bass Control
4	Rt Ch Low Frequency Input
3	Rt Ch Output
2	V_{CC}
1	Balance Control

CMOS, Color Processing Circuit for VCR, V_{DD} = –0.3V to +8V — **18–Lead DIP, See Diag. 449**

NTE15030

V_{DD}	1	18	Burst Gate Pulse Output
VCO Clock Input	2	17	Special PB Select Input
NTSC/PAL/SECAM Select Input (SCM)	3	16	Low Converting Color Subcarrier Wave Output
Horizontal Pulse Output	4	15	System Clear Input
NTSC/PAL/SECAM Select Input (PN)	5	14	Synchronizing Signal Input
Head Switch Pulse Input	6	13	Field Start Inhibit Pulse Output
Side Lock Detect Output	7	12	Burst Compensation Error Pulse Input
V_{SS}	8	11	Rec/PB Select Input
Phase Comparator Output	9	10	Burst Compensation Pulse Output

Dual, AF PO, 15W/Ch, Dual Power Supply, V_{CC} = ±30V — **15–Lead SIP, See Diag. 545**

NTE15031 Front View

15	Rt Ch Input (+)
14	Rt Ch Input (–)
13	Bypass
12	Feedback
11	Rt Ch Output
10	Rt Ch (–) V_{CC}
9	(+) V_{CC}
8	(+) V_{CC}
7	Lt Ch (–) V_{CC}
6	Lt Ch Output
5	Feedback
4	Bypass
3	GND
2	Lt Ch Input (–)
1	Lt Ch Input (+)

TV Fixed Voltage Regulator, V_O = 130V @ 1A — **5–Lead SIP, See Diag. 453**

NTE15032 Front View

5	Blank
4	Output
3	Input
2	Base
1	Common (–)

TV Fixed Voltage Regulator, V_O = 135V @ 1A — **5–Lead SIP, See Diag. 453**

NTE15033 Front View

5	Blank
4	Output
3	Input
2	Base
1	Common (–)

See Diagrams, beginning on Page 1–252

AF Power Amp, 100W/Ch, V_{CC} = ±51V Typ — **22–Lead SIP, See Diag. 456**

NTE15034 Front View

22	N.C.
21	N.C.
20	(–) Input Rt Ch
19	(+) Input Rt Ch
18	GND
17	Compensation
16	(–) V_{CC}
15	Output Rt Ch
14	Bypass
13	(+) V_{CC}
12	Output Lt Ch
11	(–) V_{CC}
10	Compensation
9	Compensation
8	Muting
7	Compensation
6	Compensation
5	Compensation
4	(–) Input Lt Ch
3	(+) Input Lt Ch
2	N.C.
1	N.C.

Chroma Signal Processor for VHS VCR, V_{CC} = 5V Typ — **24–Lead DIP, See Diag. 467**

NTE15038

Comb Amp Out	1	24	PB Amp Input
ACC Filter	2	23	PB 3.58MHz Output
3.58MHz Input	3	22	SW30/LP
Bypass	4	21	Video Input
3.58MHz Output	5	20	V_{CC}
GND	6	19	XO Input
PB 629kHz Input	7	18	XO Output
SLD Output	8	17	$2f_{SC}$ Output
Rec 629kHz Input	9	16	VCO Tank
$160f_H$ VCO Filter	10	15	Rec APC Filter
4.21MHz Input	11	14	Sync Input/BPG Output
Color Killer Filter	12	13	4.21MHz Output

TV Fixed Voltage Regulator, V_O = 120V @ 1A — **5–Lead SIP, See Diag. 453**

NTE15040 Front View

5	Blank
4	Output
3	Input
2	Base
1	Common (–)

TV Fixed Voltage Regulator, V_O = 125V @ 1A — **5–Lead SIP, See Diag. 453**

NTE15041 Front View

5	Blank
4	Output
3	Input
2	Base
1	Common (–)

Video IF, Chroma Deflection, V_{CC} = 12V — **64–Lead DIP, See Diag. 451**

NTE15035

X–Ray Protect	1	64	Horizontal Driver Output
Tint Control	2	63	$32f_H$ VCO
Color Control	3	62	$32f_H$ VCO
f_{SC} VCO	4	61	$32f_H$ VCO
Killer Filter	5	60	AFC Time Constant
f_{SC} VCO	6	59	Flyback Pulse Input
APC Filter	7	58	H V_{CC} (6.8V)
Contrast Control	8	57	Sync Separator Input
R–Y Output	9	56	Sync Separator Time Constant
G–Y Output	10	55	Vertical NFB
B–Y Output	11	54	Vertical Output
GND	12	53	Video Input
–Y Output	13	52	Differential Input
Pedestal Clamp	14	51	Picture Sharpness
Brightness	15	50	GND
9V V_{CC} V/C/D	16	49	Chroma Input
Bypass	17	48	ACC Filter
RF AGC Delay	18	47	Video Output
9V V_{CC} PIF	19	46	RF AGC Output
PIF Input	20	45	Video Detector Tank
PIF Input	21	44	Video Detector Tank
PIF AGC Time Constant	22	43	AFT Tank/Defeat
PIF AGC Time Constant	23	42	AFT Output
GND	24	41	4.5MHz Output
QIF Input	25	40	GND
QIF Input	26	39	I/C Detector
QIF AGC Time Constant	27	38	I/C Detector
Preamp Output	28	37	9V V_{CC} Q–SIF
NFB	29	36	SIF Input
Volume Control	30	35	SIF Bias
Audio Input	31	34	Detector Output
FM Detector Tank	32	33	FM Detector Tank

VHS/VCR Chroma Signal Processor for NTSC/PAL/SEASCAM Systems, V_{CC} = 5V typ — **24–Lead DIP, See Diag. 467**

NTE15039

N/P/S Control	1	24	PB Amp Input
ACC Filter	2	23	Chroma Output
Rec Chroma Input	3	22	Switch Pulse Input LP Control Input
DC Feedback Filter	4	21	Rec Video Input
BPF Drive	5	20	V_{CC}
GND	6	19	XO Input
PB Chroma Input	7	18	XO Output
SLD Output	8	17	$2f_{SC}$ Output
Rec Chroma Output R/P Switch Control	9	16	VCO Tank
VCO Filter	10	15	Rec APC Filter
Conv Carrier Input	11	14	Sync Input/BPG Output
Color Killer Filter	12	13	Sub Conv Output

See Diagrams, beginning on Page 1–252

Digital Tuning System Interface for TV Systems, V_{CC} = 12V — **16–Lead DIP, See Diag. 472**

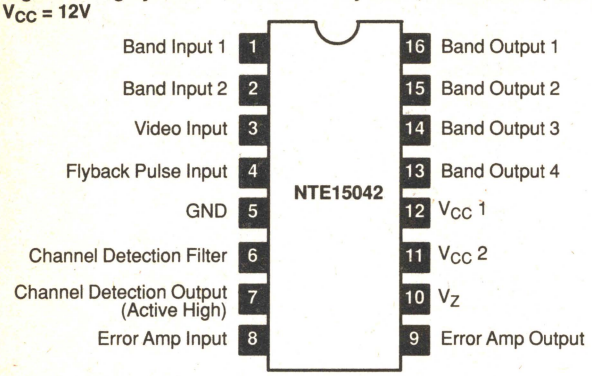

Video Head Amp for VCR, V_{CC} = 6V Max — **14–Lead DIP, See Diag. 474**

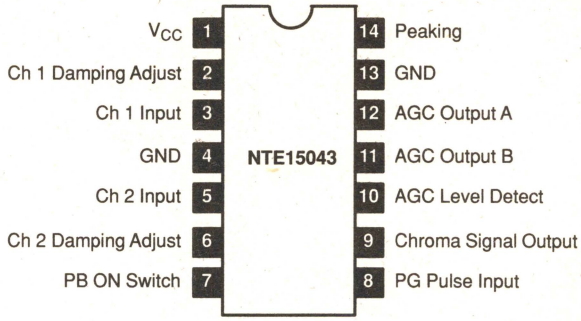

CMOS, Voltage Detector for VCR — **3–Lead SIP, See Diag. 516b**

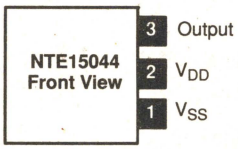

2 Input Switch for VCR, V_{CC} = 9V Typ — **7–Lead SIP, See Diag. 214**

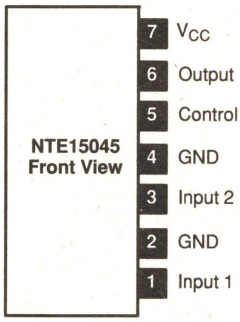

TV Video IF Processor, V_{CC} = 12V Typ — **28–Lead DIP, See Diag. 445**

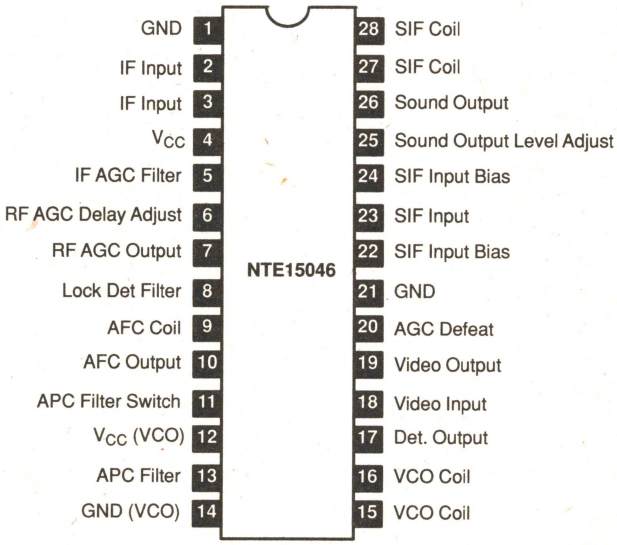

See Diagrams, beginning on Page 1–252

Universal, Low Speed Modem, 0–600 bps (MOS) — 16–Lead DIP, See Diag. 249

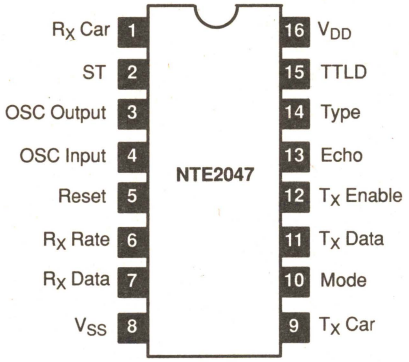

CMOS, 3 1/2 Digit A/D Converter — 24–Lead DIP, See Diag. 252

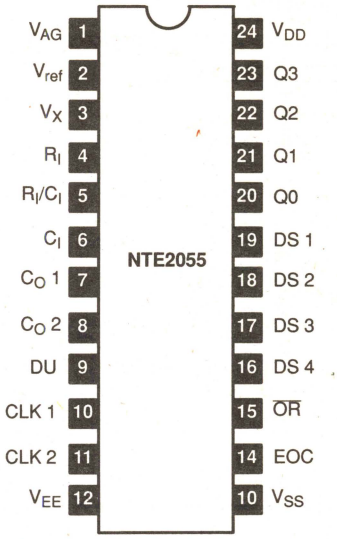

Dual, 16 Bit D to A Converter for CD and DAT Players, V_{DD} = 5V Typ — 28–Lead DIP, See Diag. 253

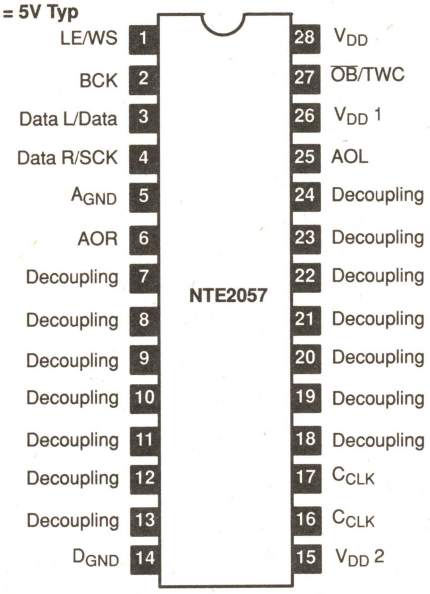

Digital Modem, 0–600 bps (MOS) — 24–Lead DIP, See Diag. 252

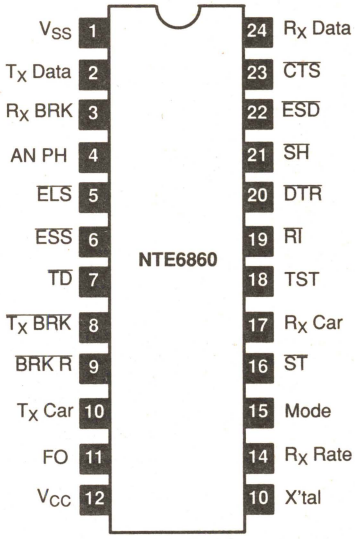

I^2L Frequency Divider — 4–Lead SIP, See Diag. 296

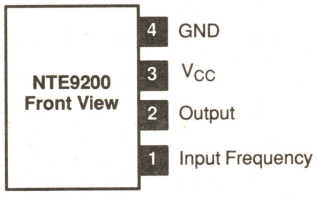

Hall Effect Switch — 4–Lead SIP, See Diag. 296

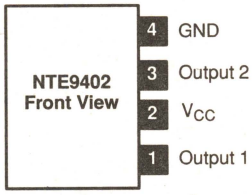

Binary/Octal Decoder — 16–Lead DIP, See Diag. 248

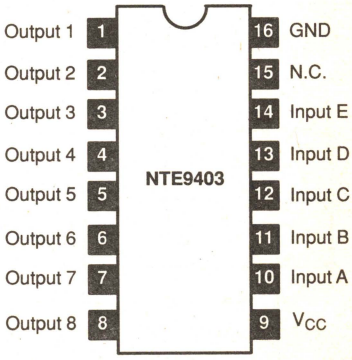

See Diagrams, beginning on Page 1–252

DIMENSIONAL OUTLINE DRAWINGS

Diagram 1

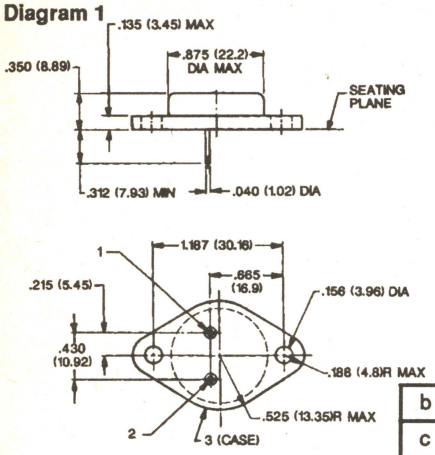

TO3

	1	2	CASE
b	ADJ	Vin	Vout
c	Vin	Vout	GND
d	ADJ	Vout	Vin
e	GND	Vout	Vin

Diagram 9

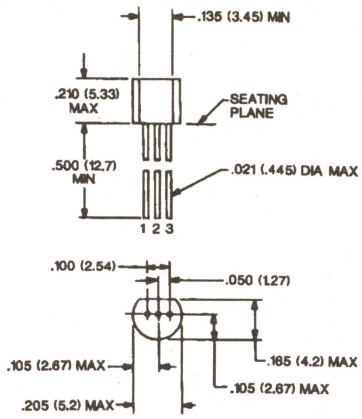

TO92

	1	2	3
l	Vout	GND	Vin
p	GND	Vin	Vout
q	ADJ	Vout	Vin

Diagram 11

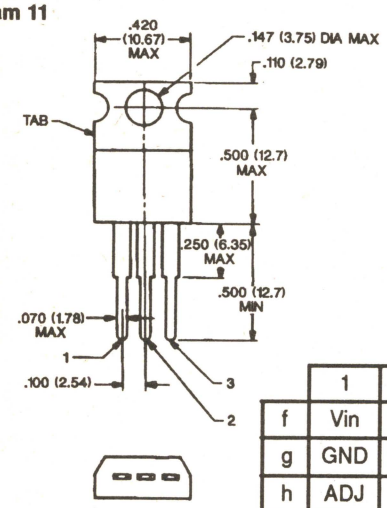

TO220

	1	2	3	TAB
f	Vin	GND	Vout	GND
g	GND	Vin	Vout	Vin
h	ADJ	Vout	Vin	Vout
i	ADJ	Vin	Vout	Vin

Diagram 59

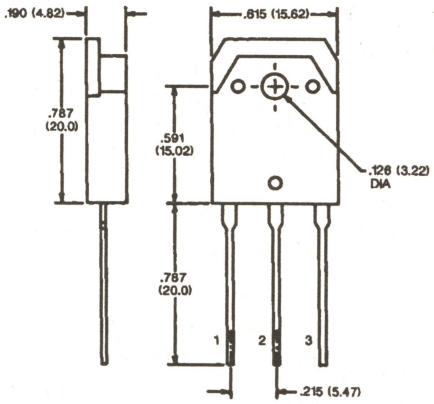

TO3P

	1	2	3	CASE
b	Vout	Vin	GND	Vin
c	GND	Vout	Vin	Vout

Diagram 198

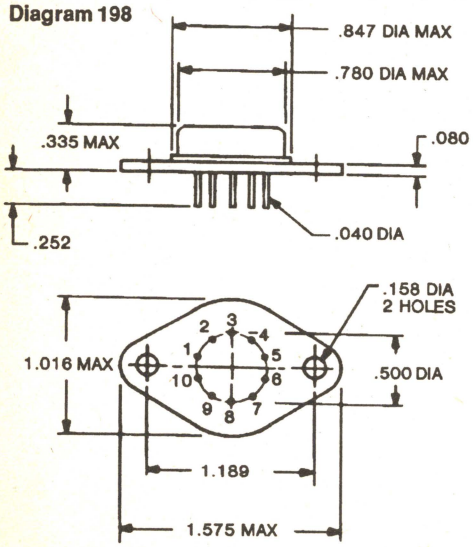

Diagram 200

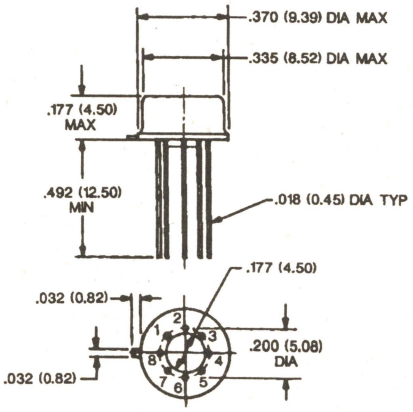

Diagram 201

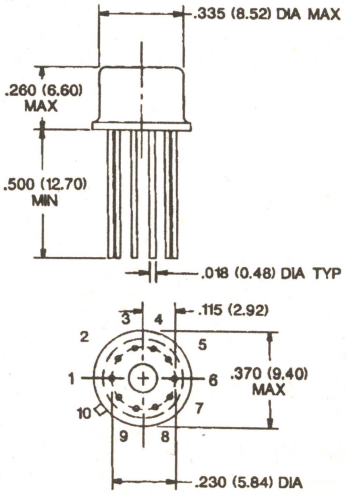

DIMENSIONAL OUTLINE DRAWINGS

Diagram 202

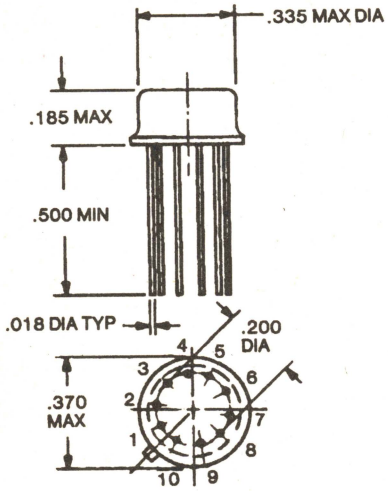

Diagram 203

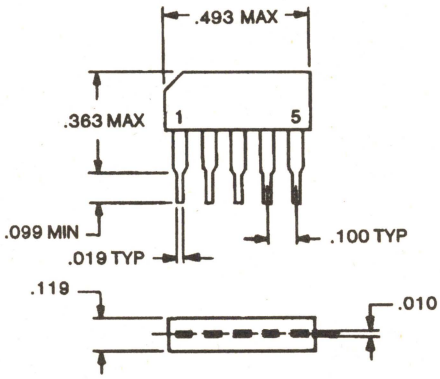

Diagram 204

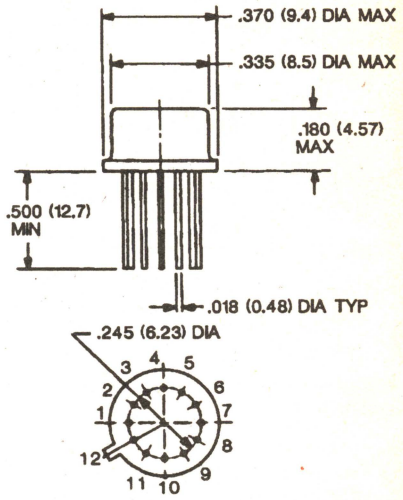

Diagram 205

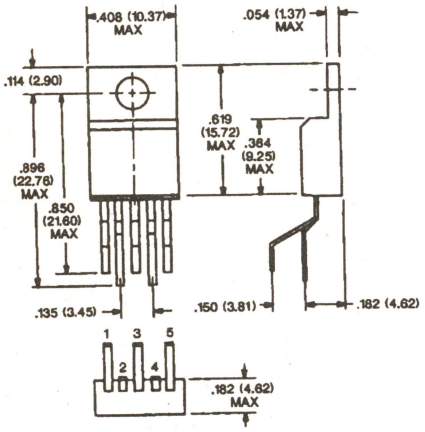

Diagram 206

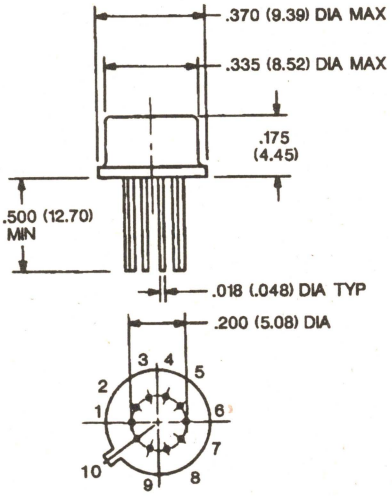

Diagram 207

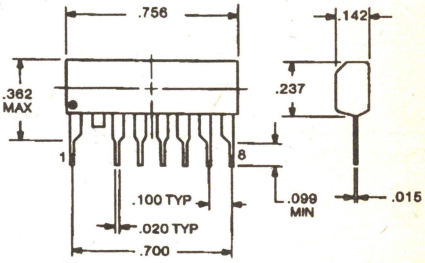

Diagram 208

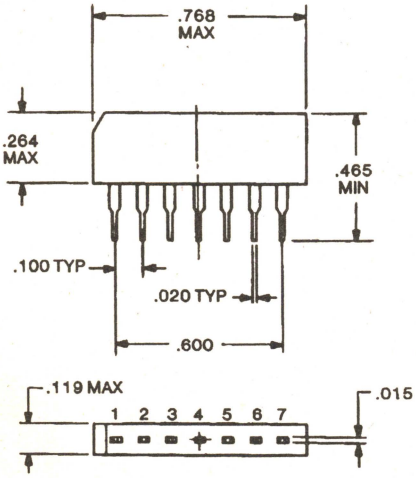

Diagram 209

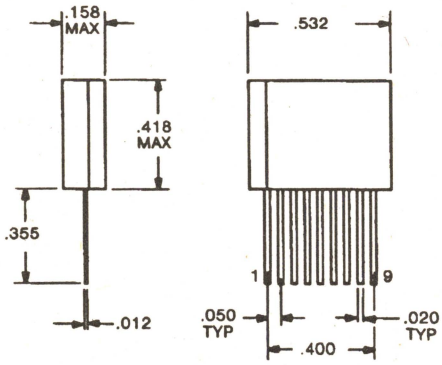

Diagram 210

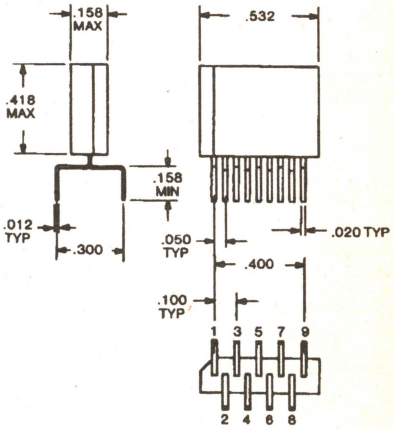

DIMENSIONAL OUTLINE DRAWINGS

Diagram 211

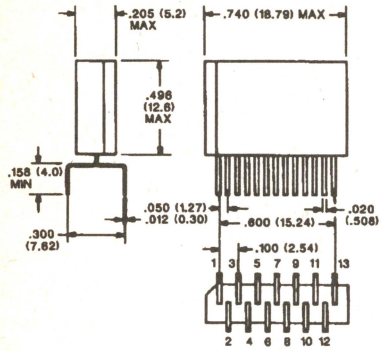

Diagram 212

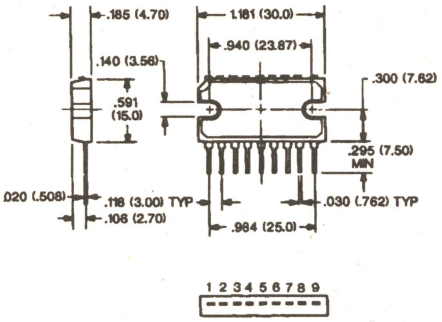

Diagram 213

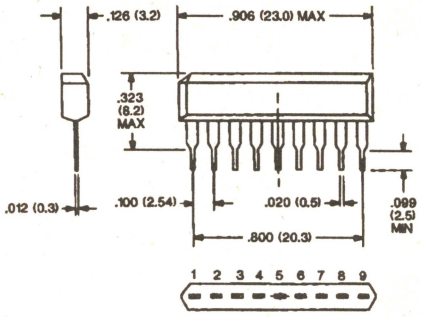

Diagram 214

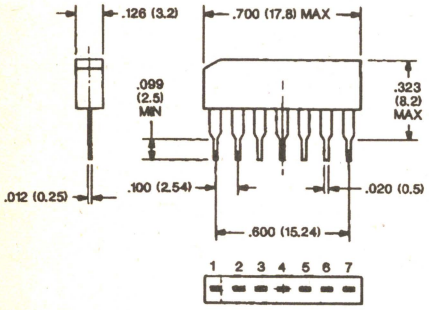

Diagram 215

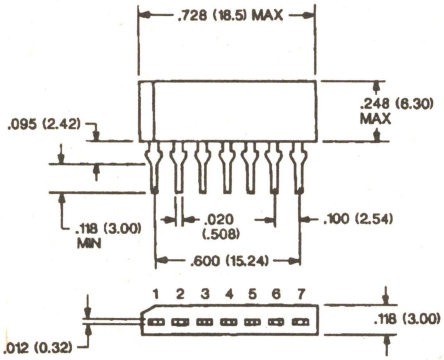

Diagram 216

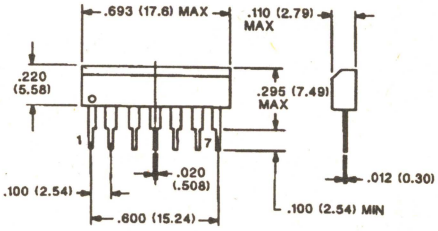

Diagram 217

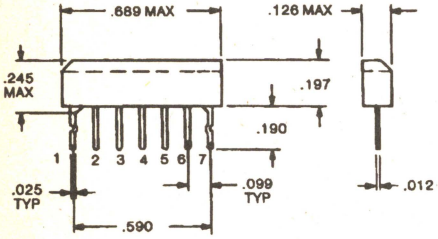

Diagram 218

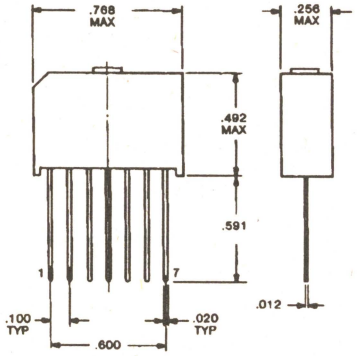

Diagram 219

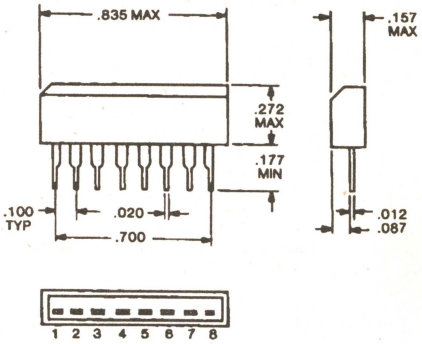

Diagram 220

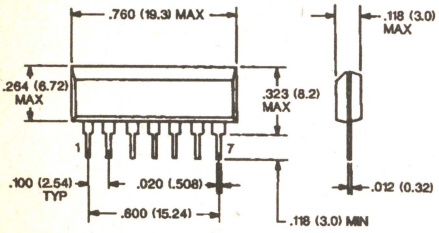

Diagram 221

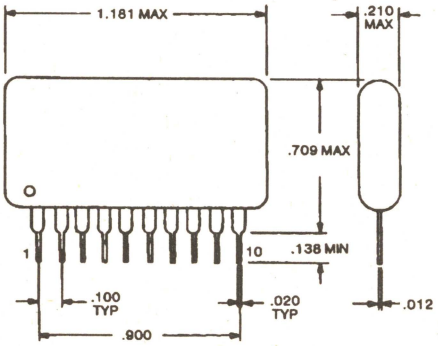

Diagram 222

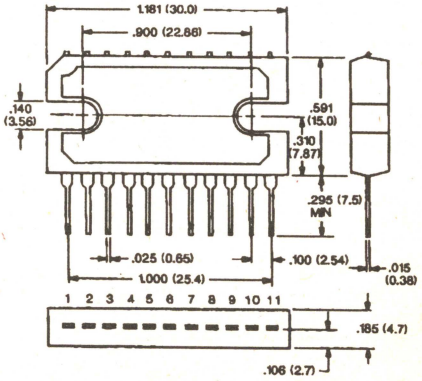

DIMENSIONAL OUTLINE DRAWINGS

Diagram 223

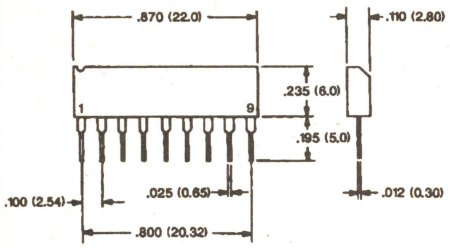

Diagram 224

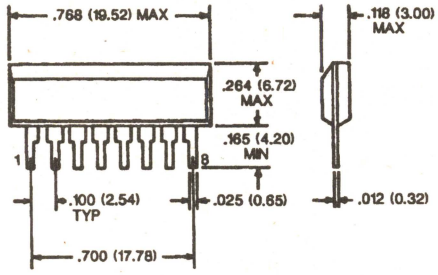

Diagram 225

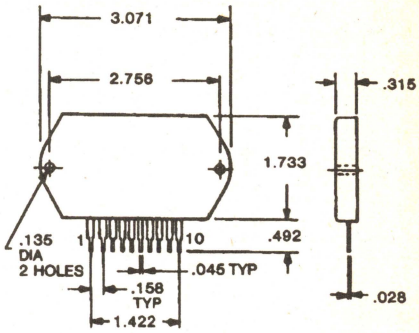

Diagram 226

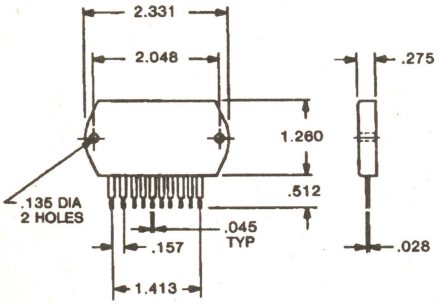

Diagram 227

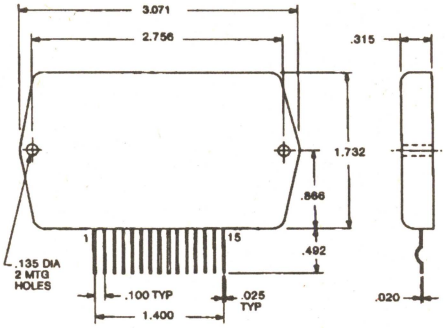

Diagram 228

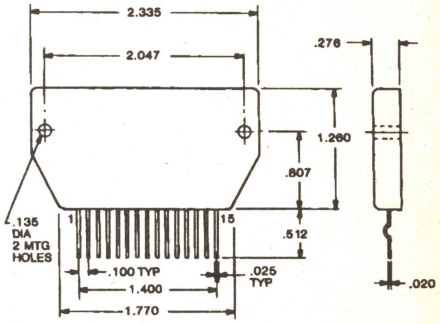

Diagram 229

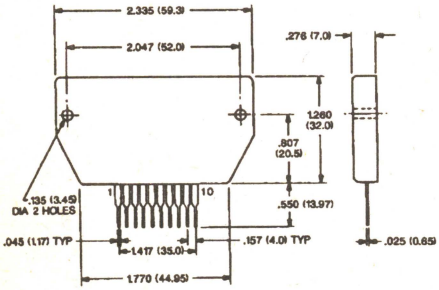

Diagram 232

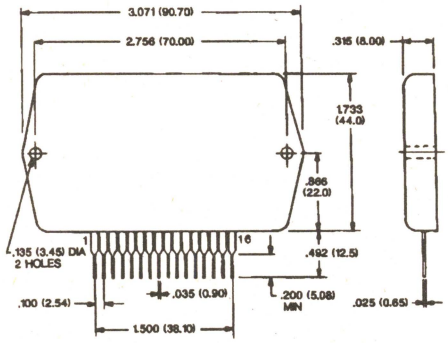

Diagram 235

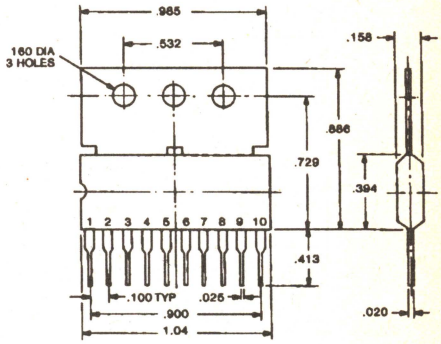

Diagram 236

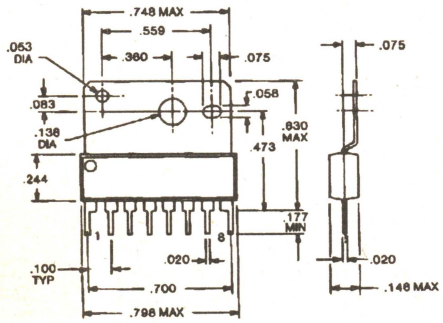

Diagram 237

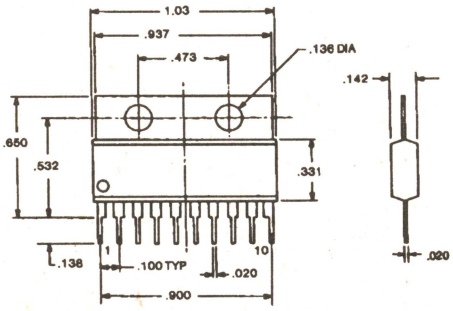

Diagram 238

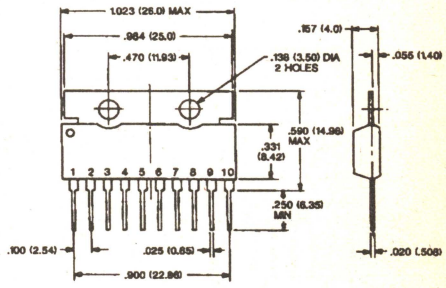

DIMENSIONAL OUTLINE DRAWINGS

Diagram 239

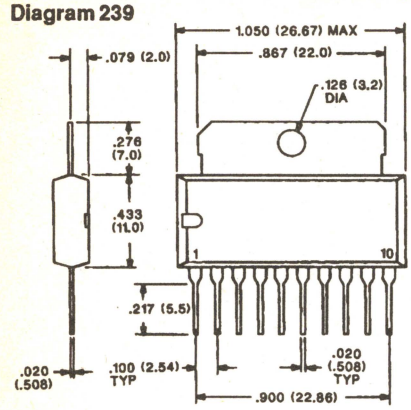

Diagram 240

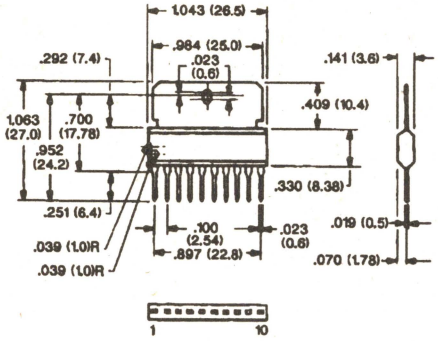

Diagram 241

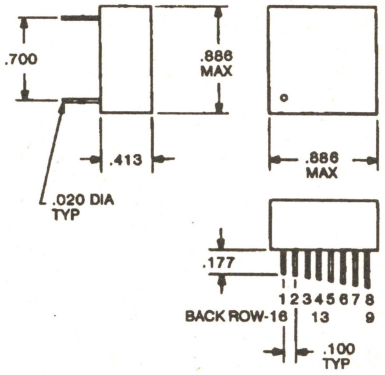

Diagram 242

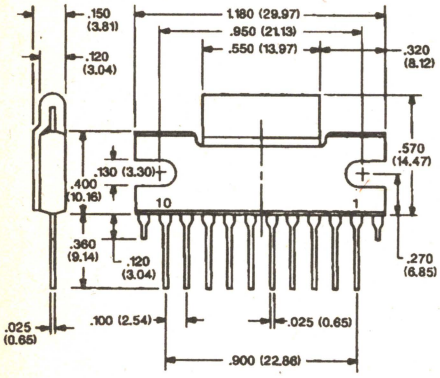

Diagram 243

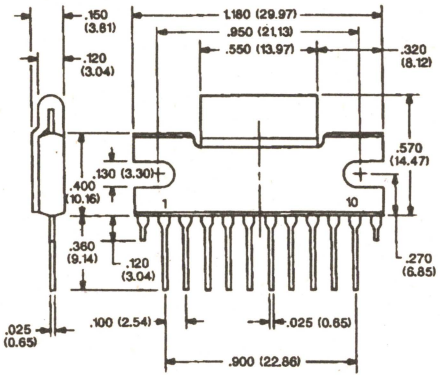

Diagram 244

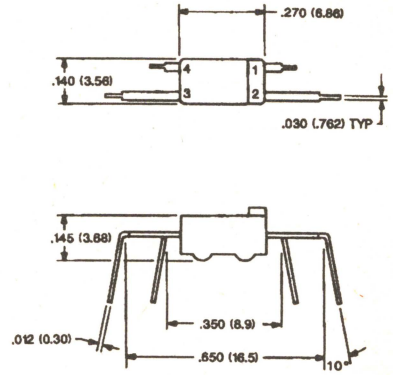

Diagram 245

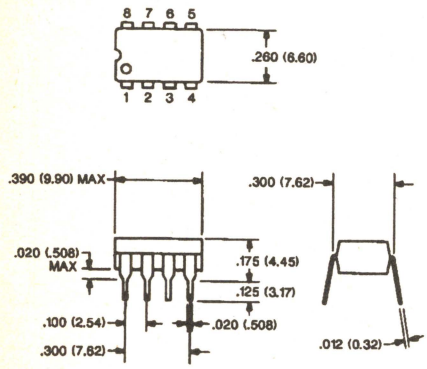

Diagram 246

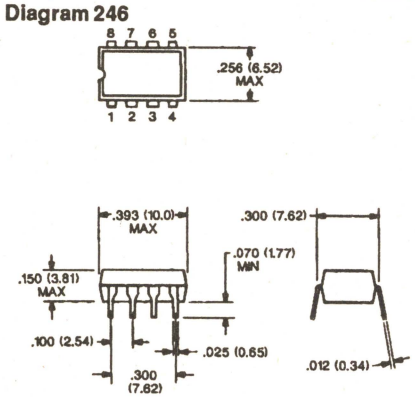

Diagram 247

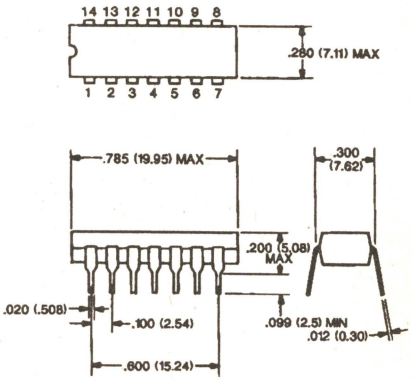

Diagram 248

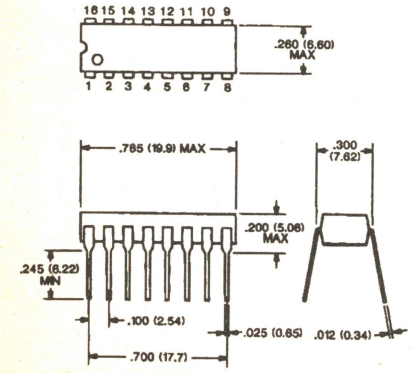

Diagram 249

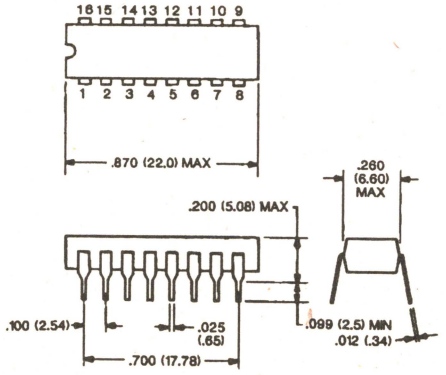

Diagram 250

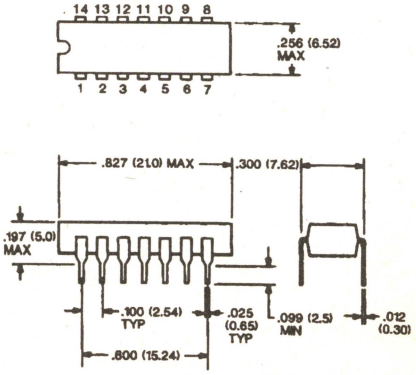

DIMENSIONAL OUTLINE DRAWINGS

Diagram 251

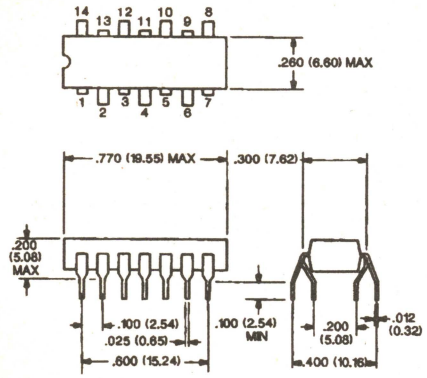

Diagram 252

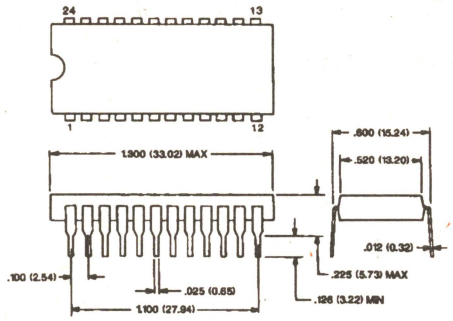

Diagram 253

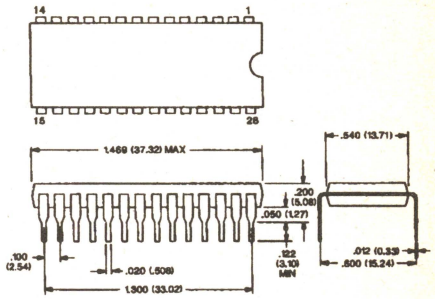

Diagram 254

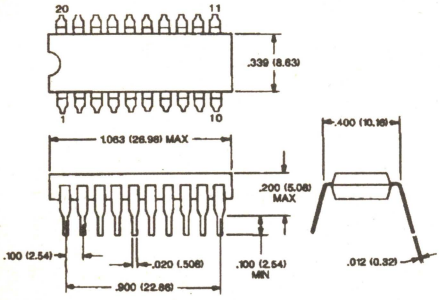

Diagram 255

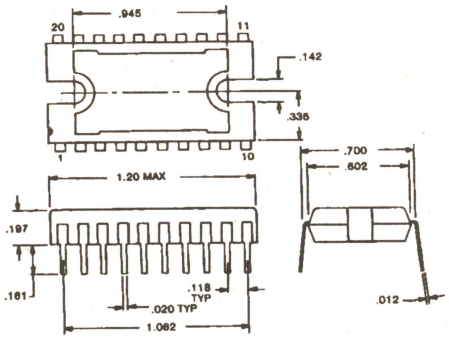

Diagram 256

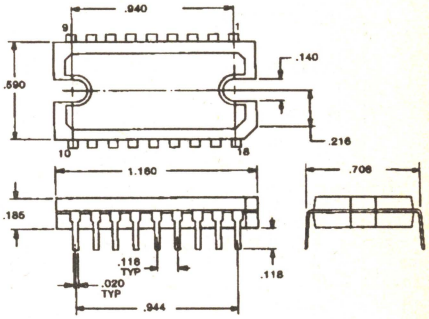

Diagram 257

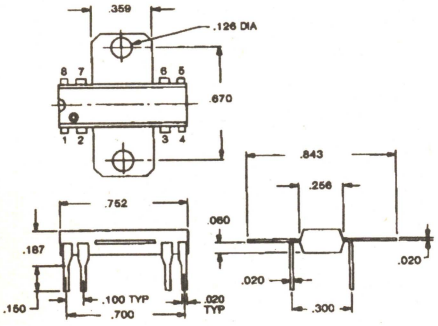

Diagram 258

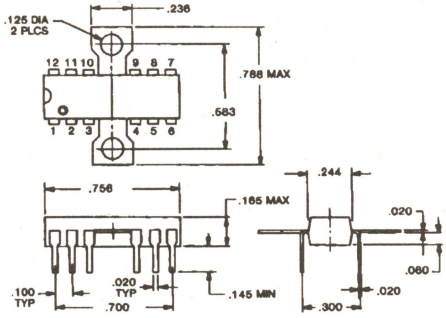

Diagram 259

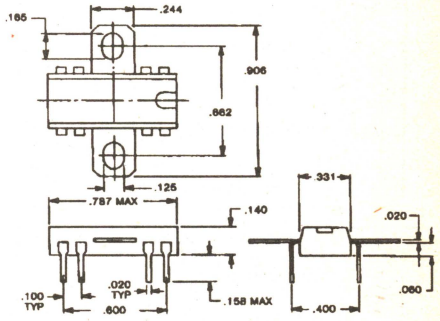

Diagram 260

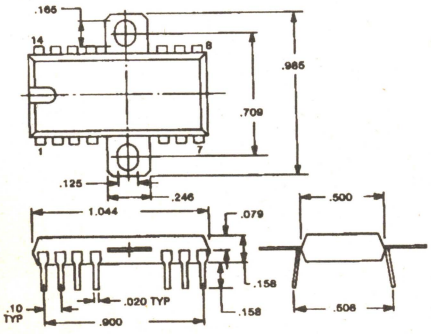

Diagram 261

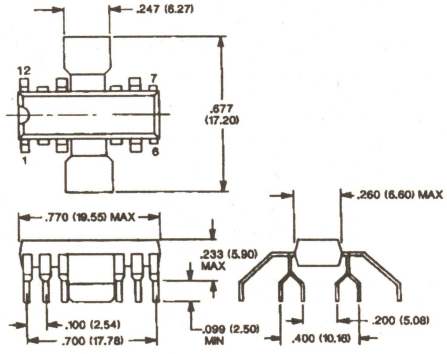

Diagram 262

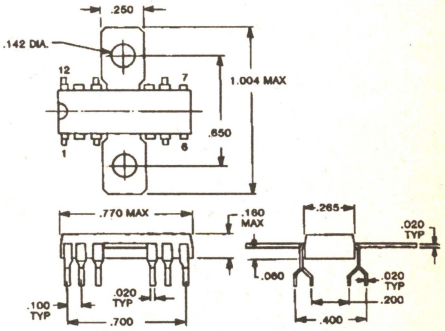

DIMENSIONAL OUTLINE DRAWINGS

Diagram 263

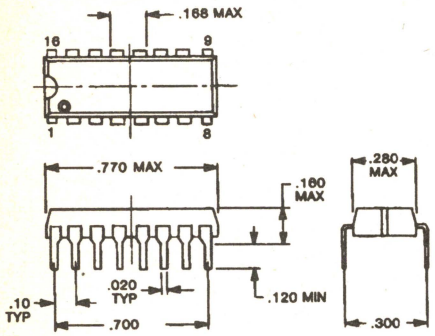

Diagram 264

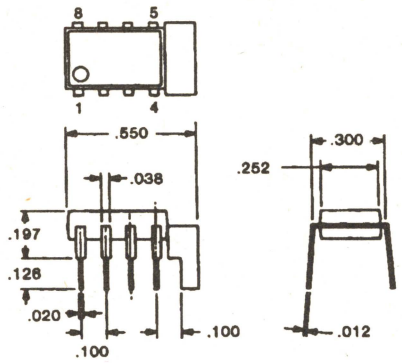

Diagram 265

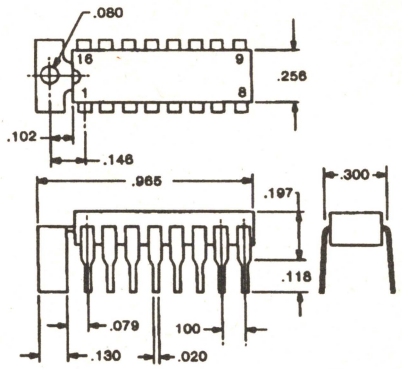

Diagram 267

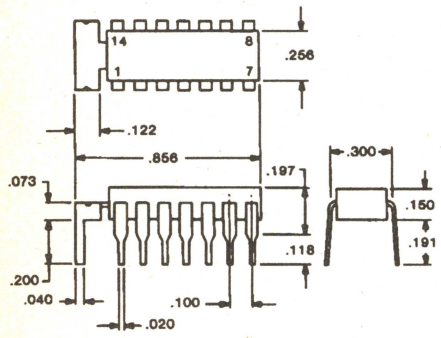

Diagram 268

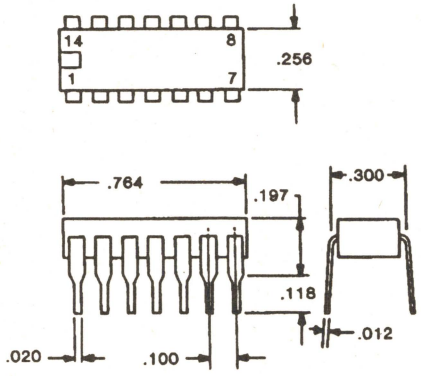

Diagram 269

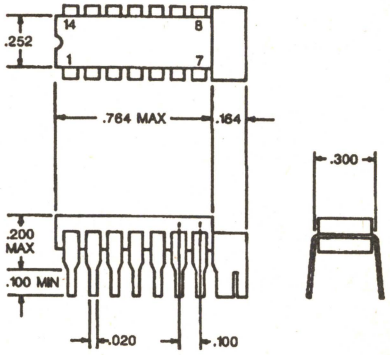

Diagram 270

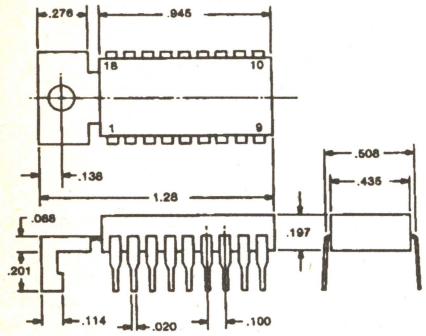

Diagram 271

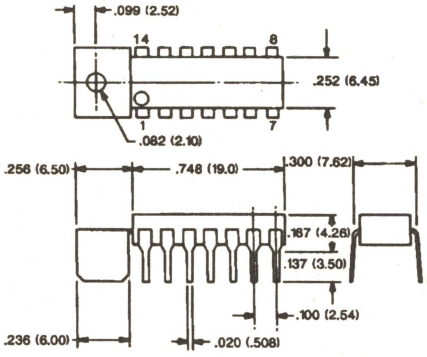

Diagram 272

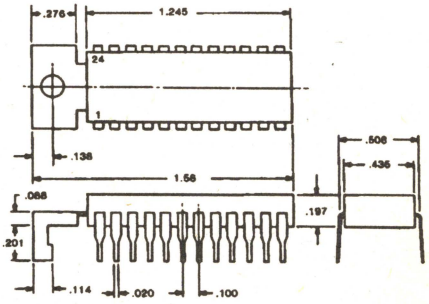

Diagram 273

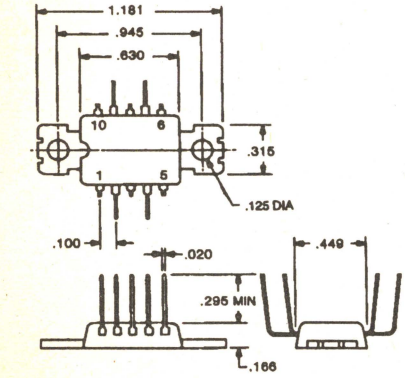

Diagram 274

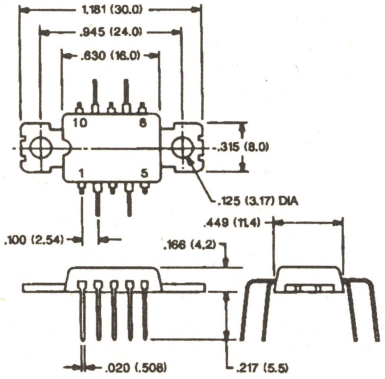

Diagram 277

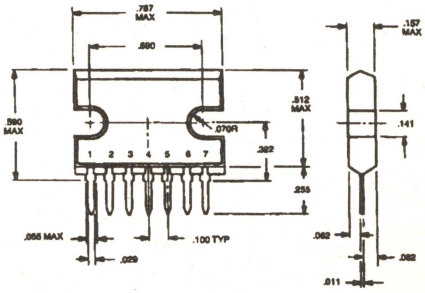

DIMENSIONAL OUTLINE DRAWINGS

Diagram 278

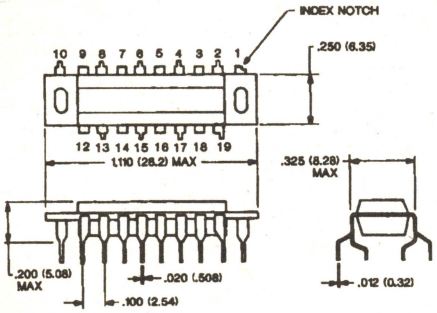

Diagram 279

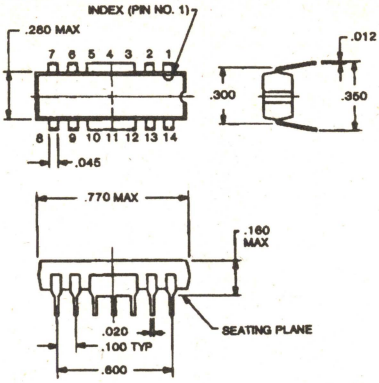

Diagram 282

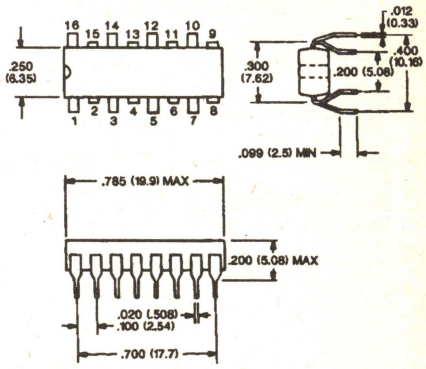

Diagram 283

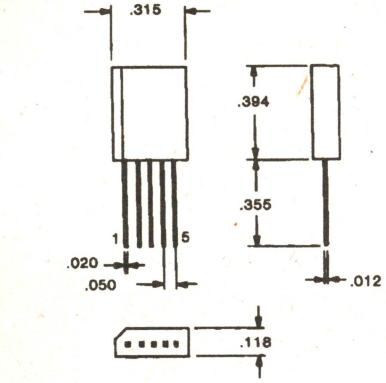

Diagram 285

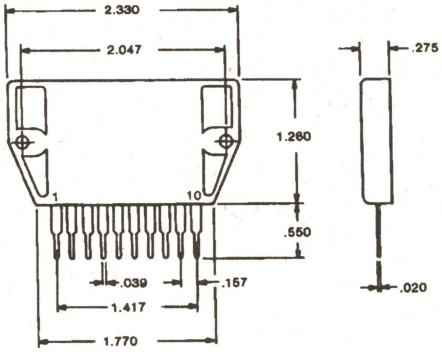

Diagram 286

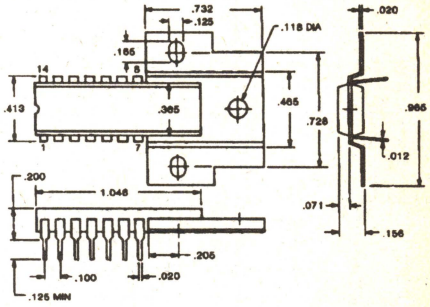

Diagram 287

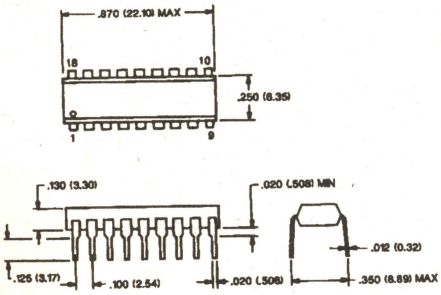

Diagram 288

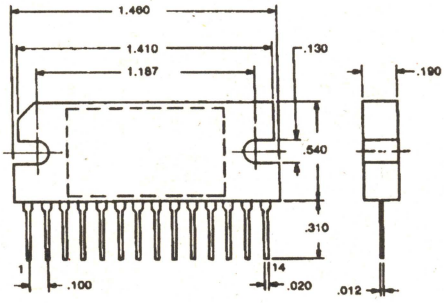

Diagram 289

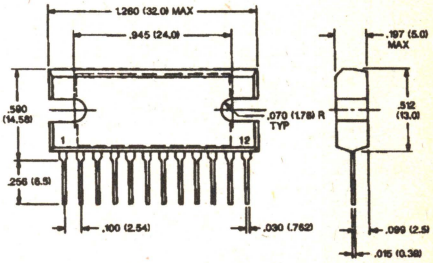

Diagram 290

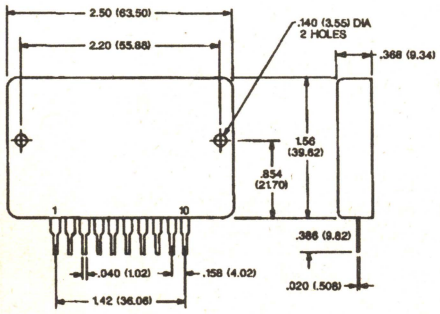

Diagram 292

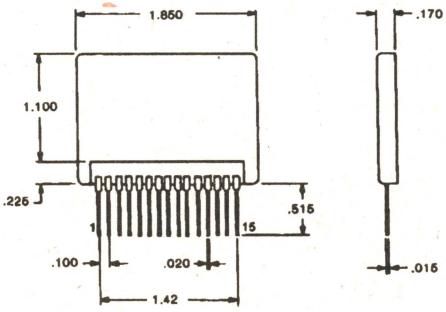

Diagram 296

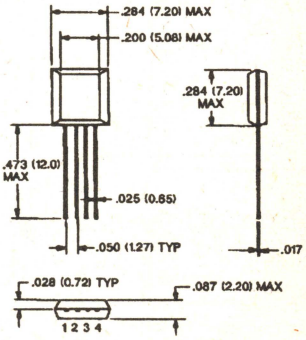

DIMENSIONAL OUTLINE DRAWINGS

Diagram 299

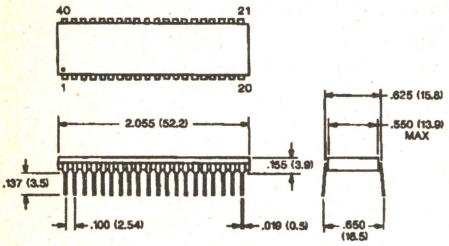

Diagram 305

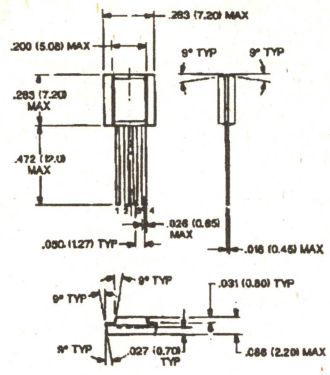

Diagram 306

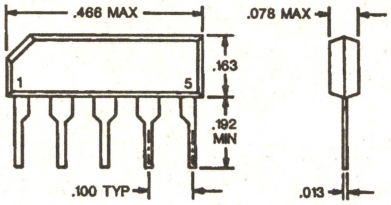

Diagram 307

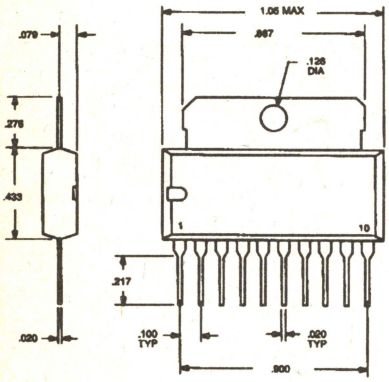

Diagram 308

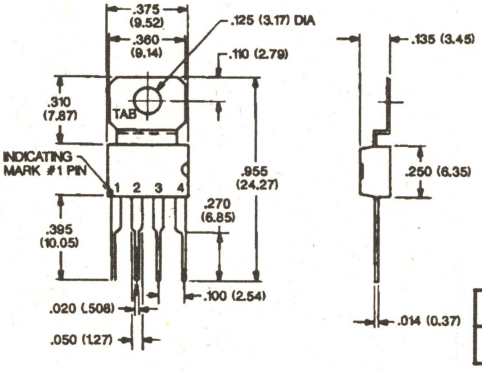

	1	2	3	4	TAB
a	GND	Vin	Vout	ADJ	GND
b	GND	ADJ	Vout	Vin	Vin

Diagram 310

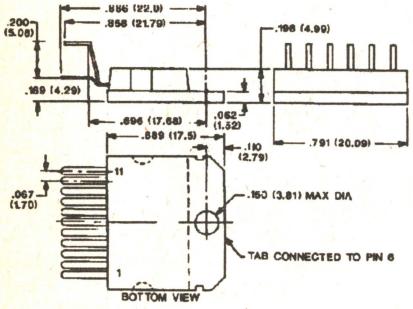

Diagram 311

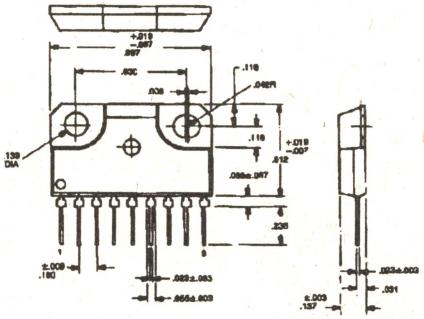

Diagram 312

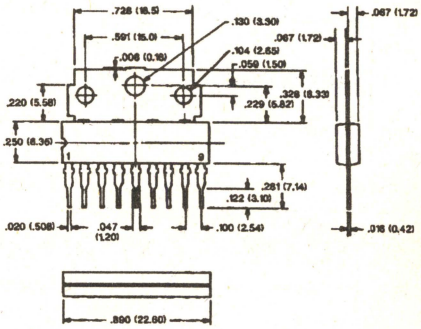

Diagram 313

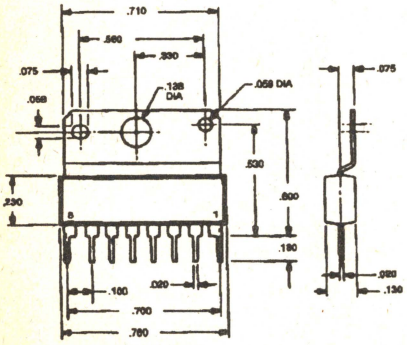

Diagram 314

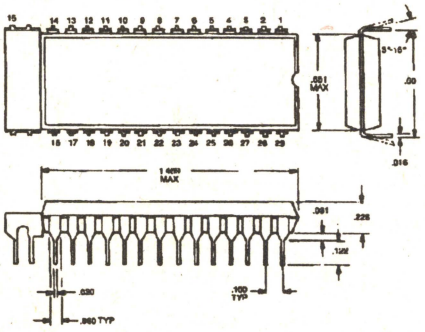

Diagram 315

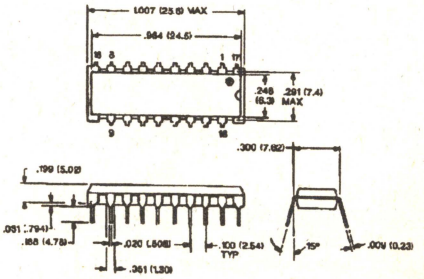

DIMENSIONAL OUTLINE DRAWINGS

Diagram 316

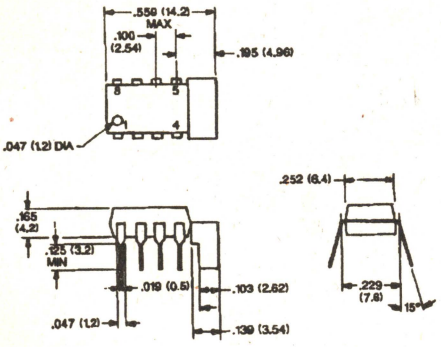

Diagram 317

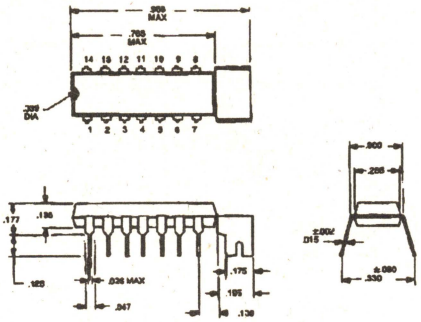

Diagram 319

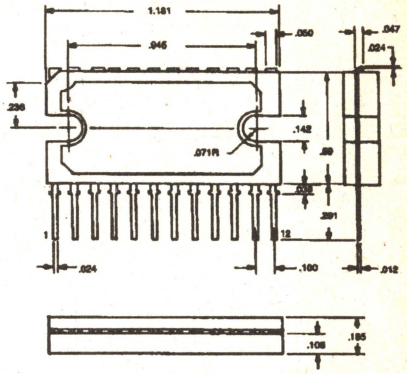

Diagram 320

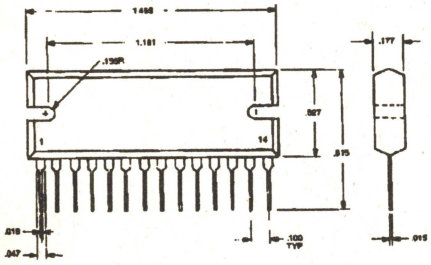

Diagram 321

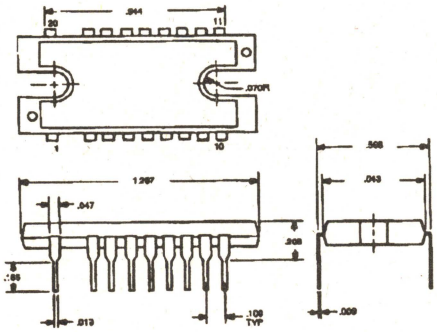

Diagram 322

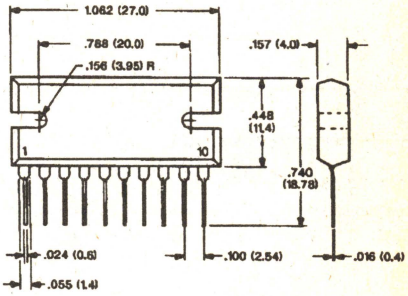

Diagram 323

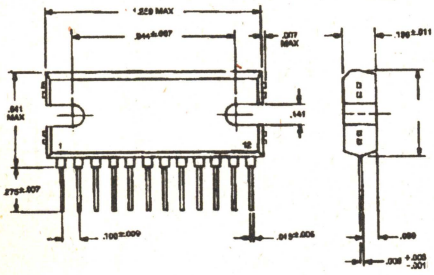

Diagram 324

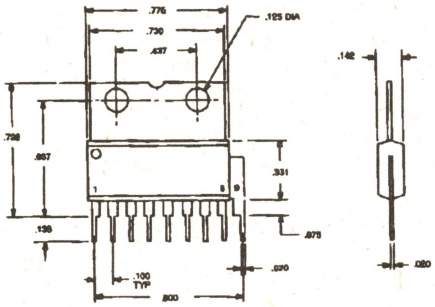

Diagram 325

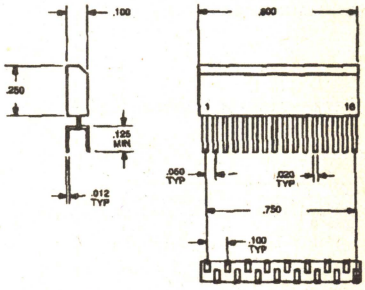

Diagram 326

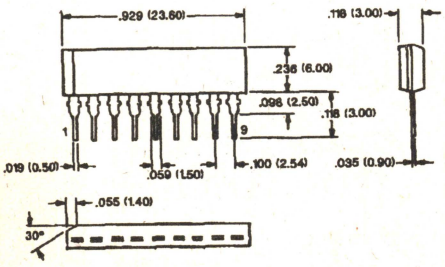

Diagram 327

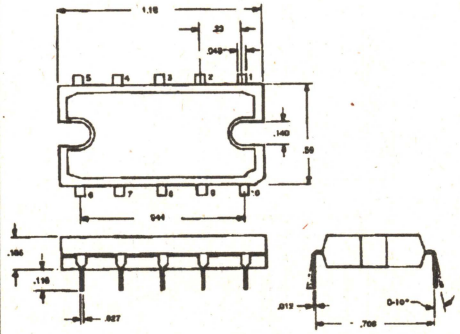

Diagram 328

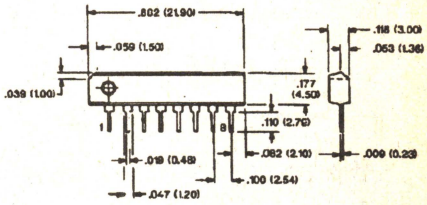

DIMENSIONAL OUTLINE DRAWINGS

Diagram 329

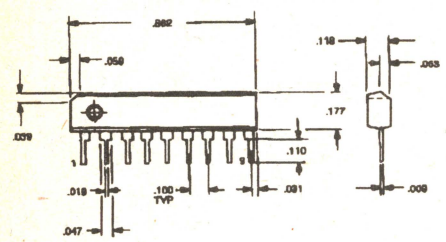

Diagram 330

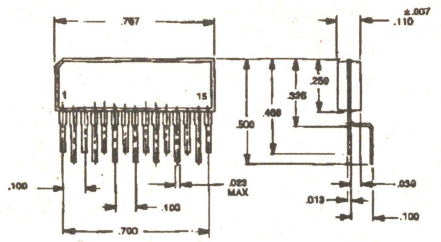

Diagram 331

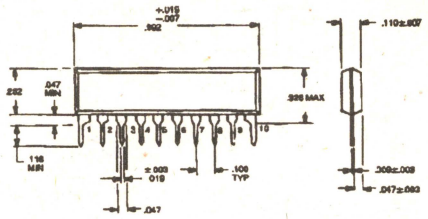

Diagram 332

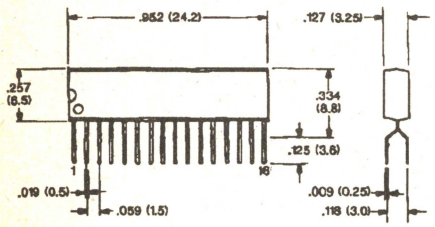

Diagram 333

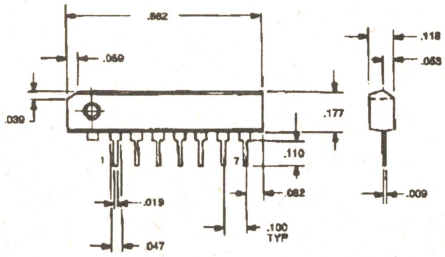

Diagram 334

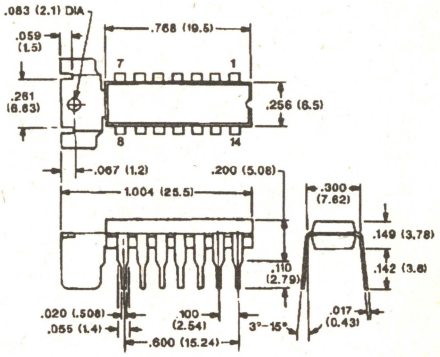

Diagram 335

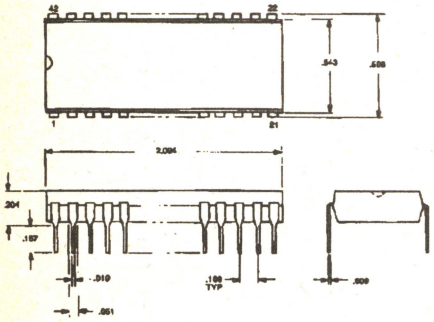

Diagram 337

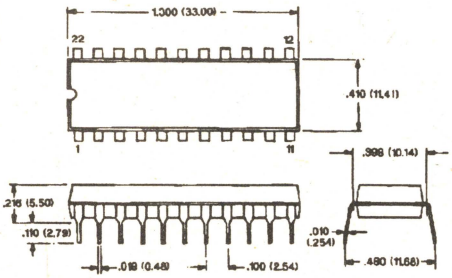

Diagram 338

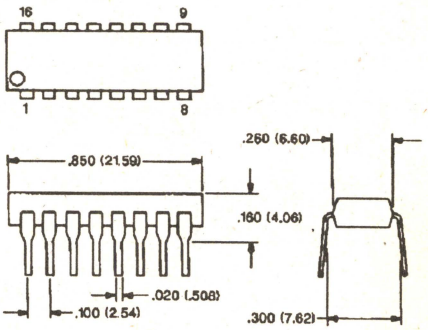

Diagram 339

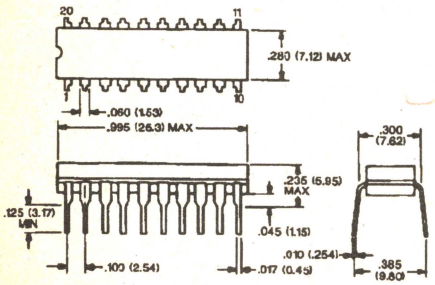

Diagram 348

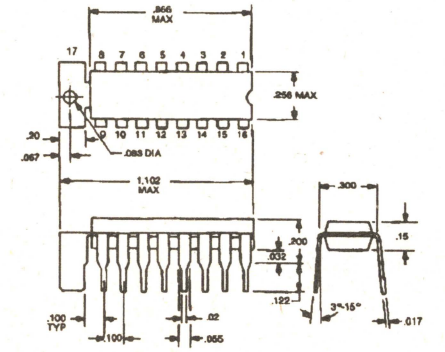

Diagram 349

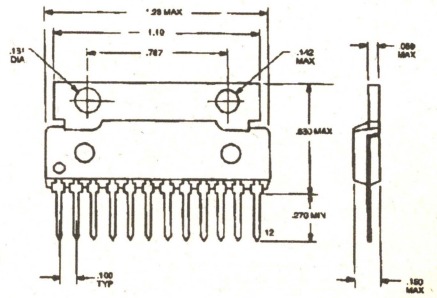

DIMENSIONAL OUTLINE DRAWINGS

Diagram 378

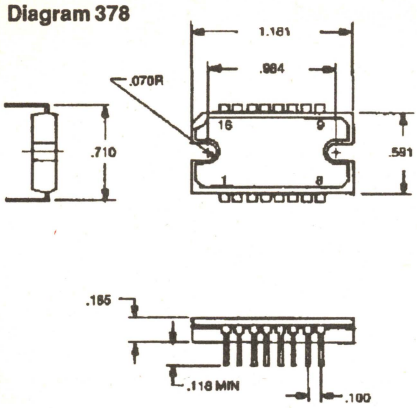

Diagram 384

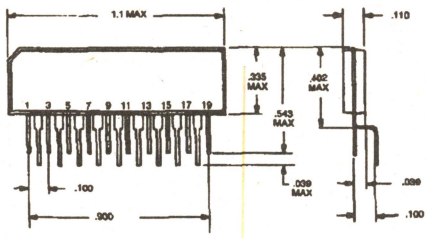

Diagram 385

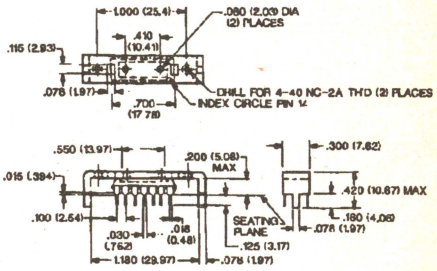

Diagram 391

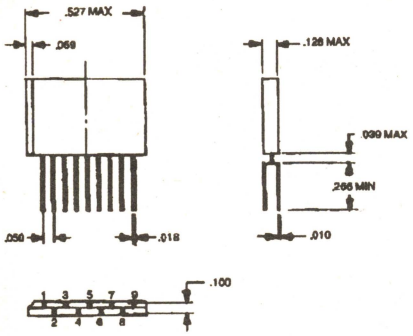

Diagram 402

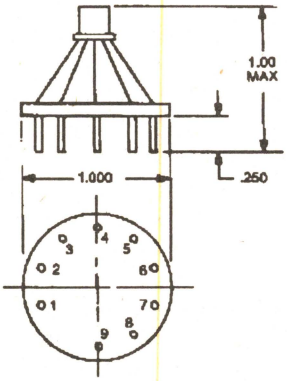

Diagram 408

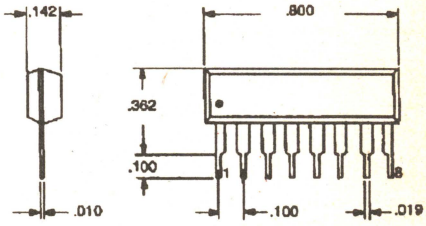

Diagram 410

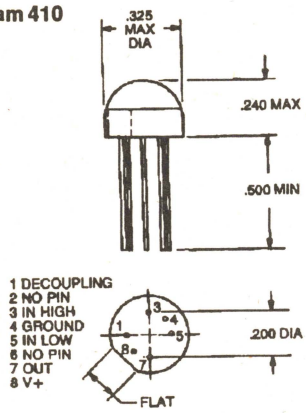

Diagram 414

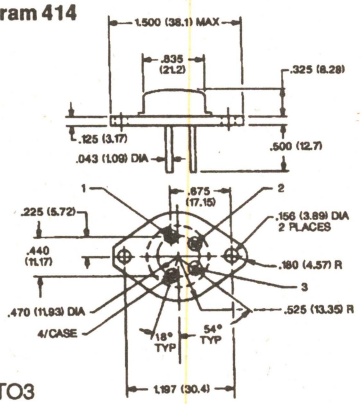

	1	2	3	4	CASE
b	Vin	Vout	ADJ	GND	GND

Diagram 419

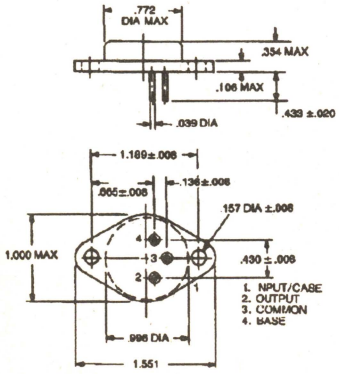

Diagram 424

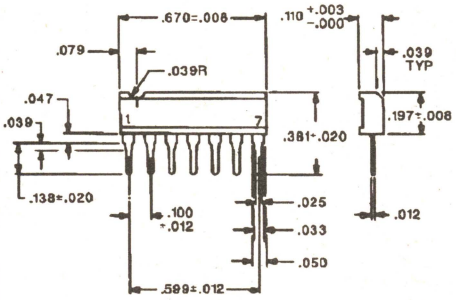

Diagram 442

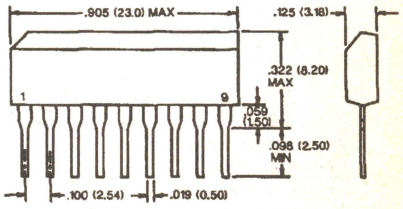

DIMENSIONAL OUTLINE DRAWINGS

Diagram 443

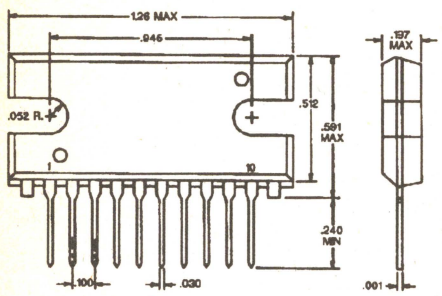

Diagram 444

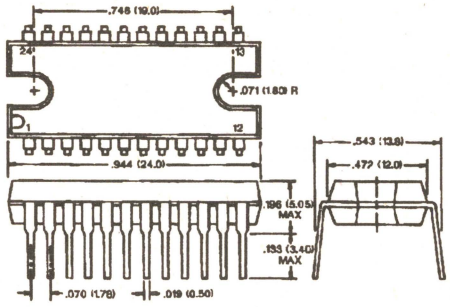

Diagram 445

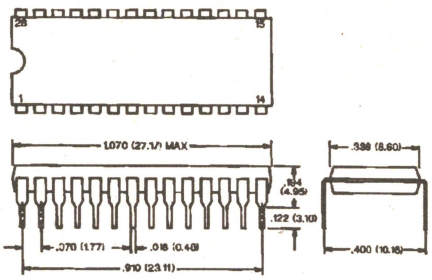

Diagram 447

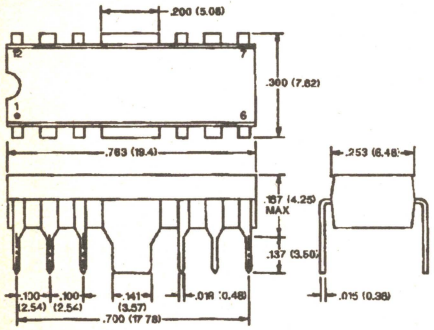

Diagram 448

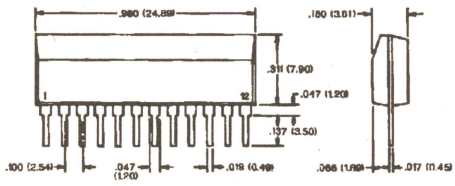

Diagram 449

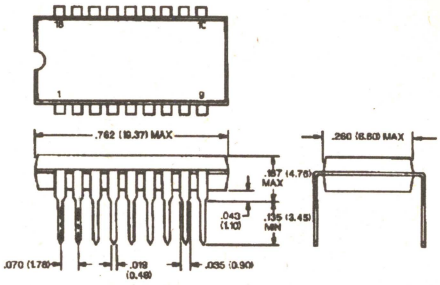

Diagram 450

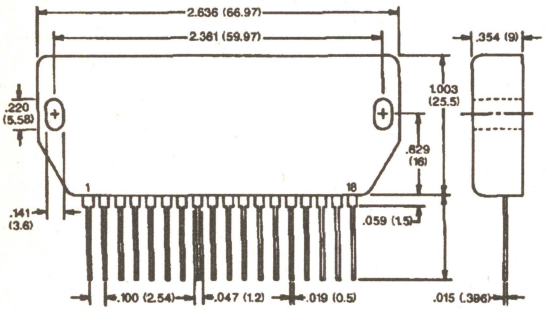

Diagram 451

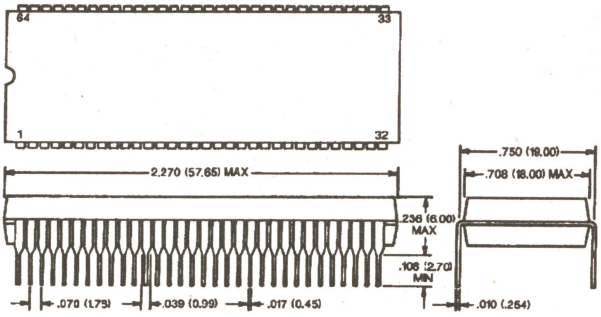

Diagram 453

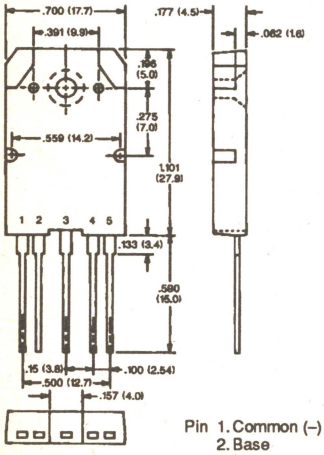

Pin 1. Common (–)
2. Base
3. Input
4. Output
5. Blank

Diagram 453alt.

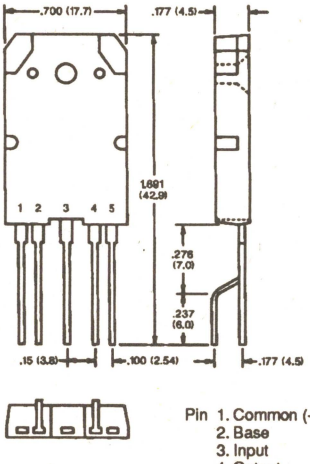

Pin 1. Common (–)
2. Base
3. Input
4. Output
5. Blank

Diagram 454

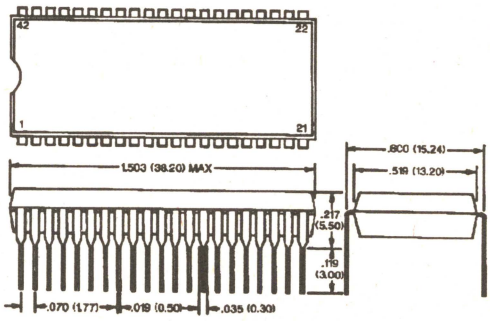

DIMENSIONAL OUTLINE DRAWINGS

Diagram 455

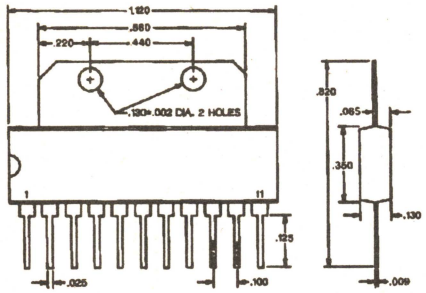

Diagram 456

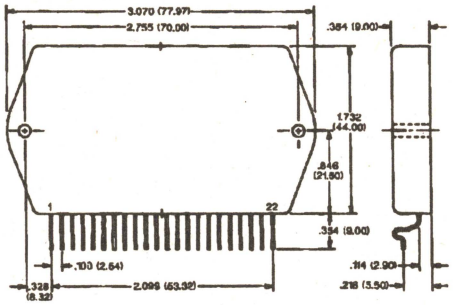

Diagram 457

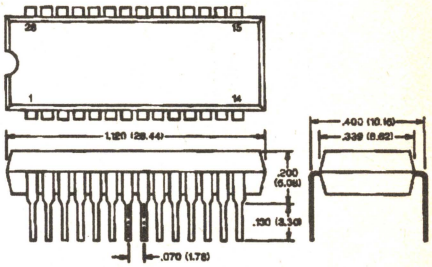

Diagram 458

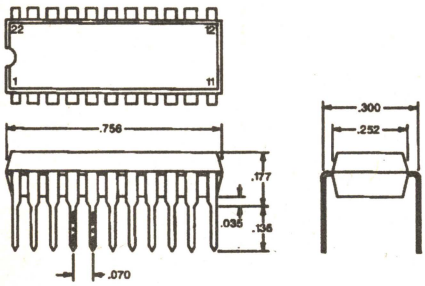

Diagram 459

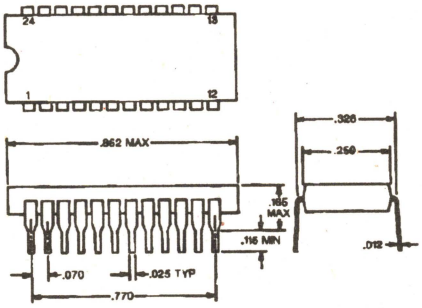

Diagram 462

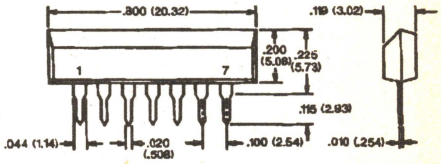

Diagram 463

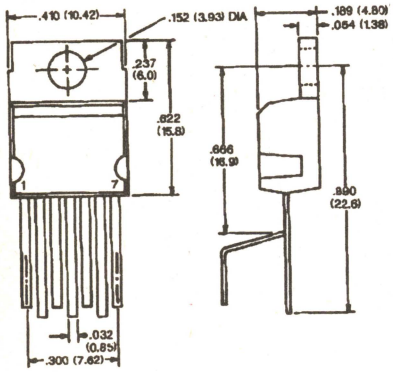

Diagram 464

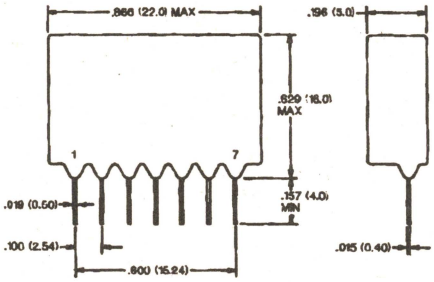

Diagram 466

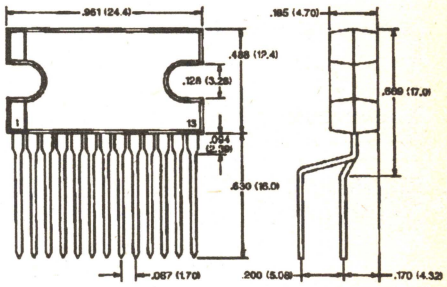

Diagram 467

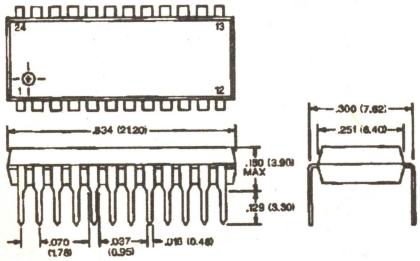

Diagram 469

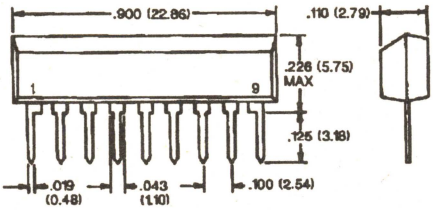

Diagram 470

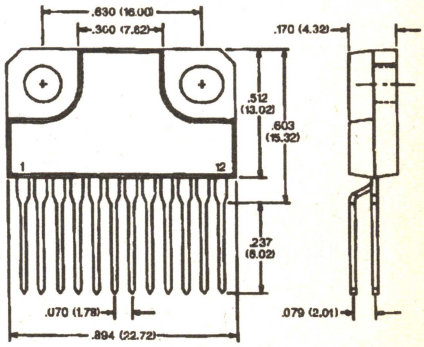

DIMENSIONAL OUTLINE DRAWINGS

Diagram 471

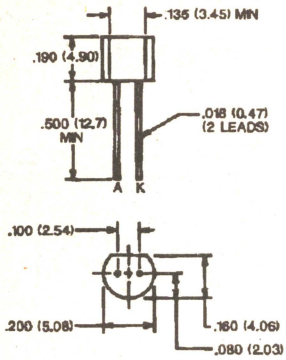

Diagram 472

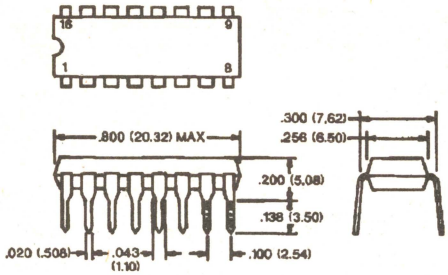

Diagram 474

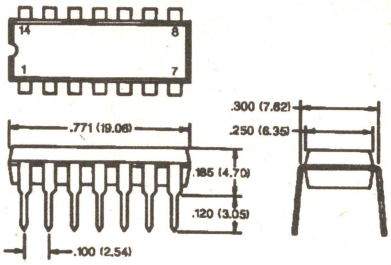

Diagram 476

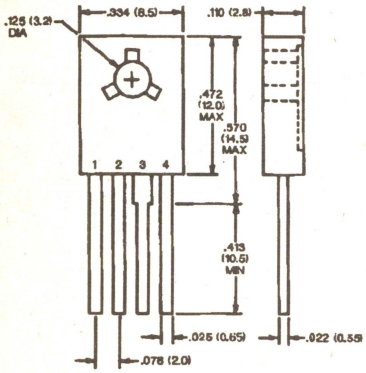

Diagram 478

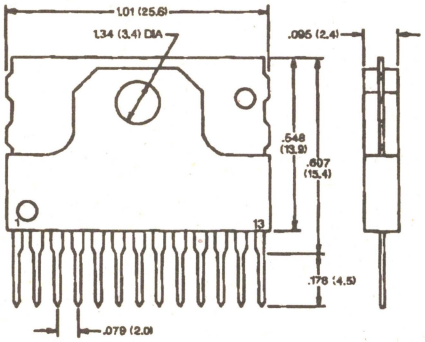

Diagram 479

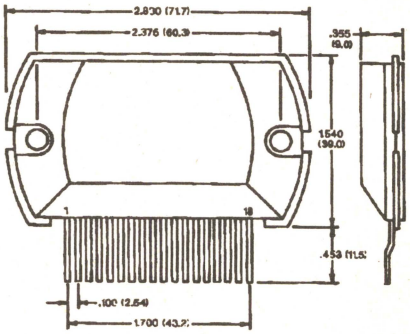

Diagram 484

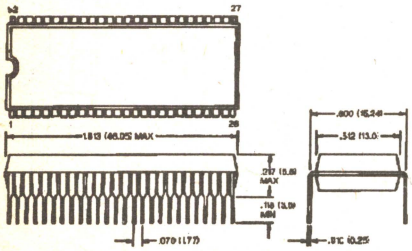

Diagram 485

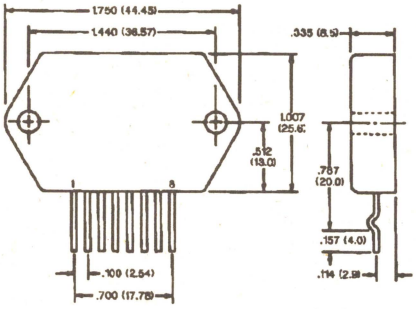

Diagram 486

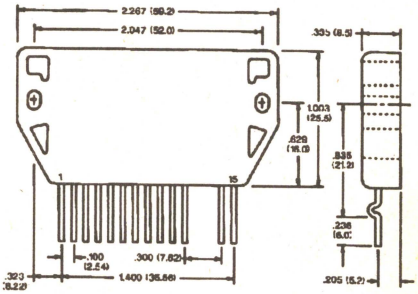

Diagram 487

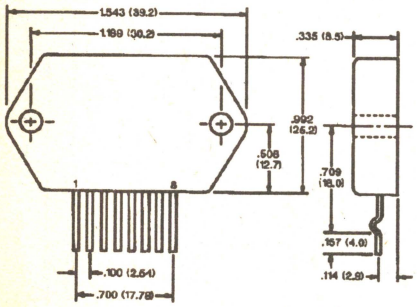

Diagram 488

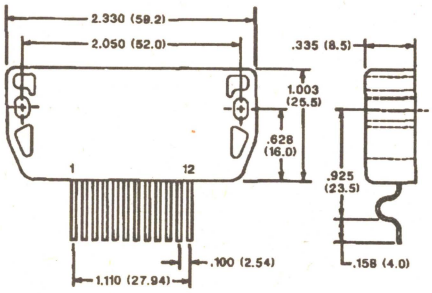

Diagram 489

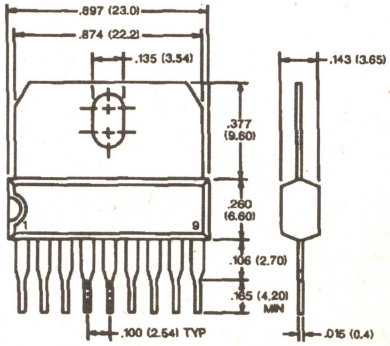

ALL DIMENSIONS ARE MAX

DIMENSIONAL OUTLINE DRAWINGS

Diagram 490

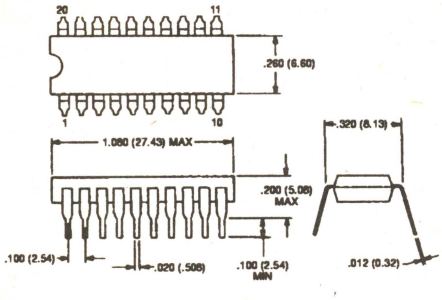

Diagram 492

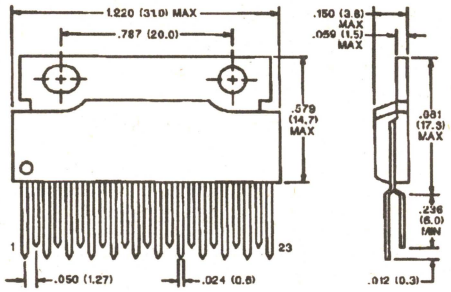

Diagram 493

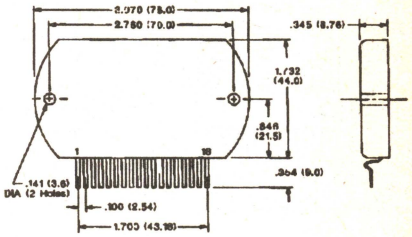

Diagram 494

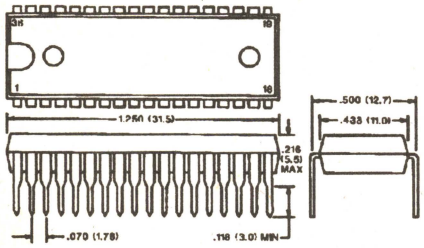

Diagram 495

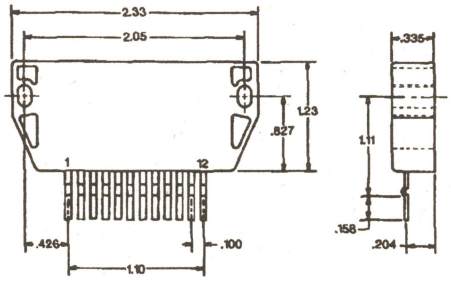

Diagram 496

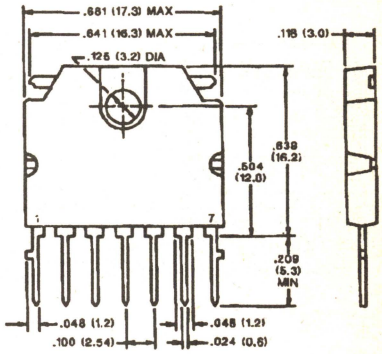

Diagram 497

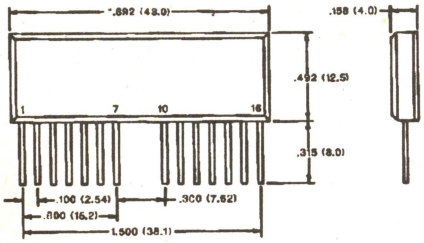

Diagram 498

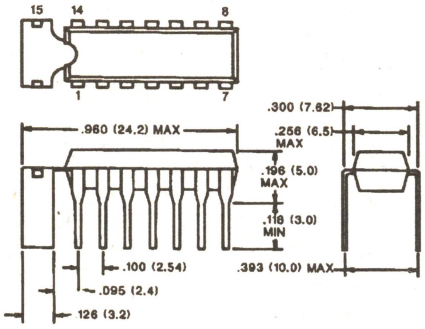

Diagram 499

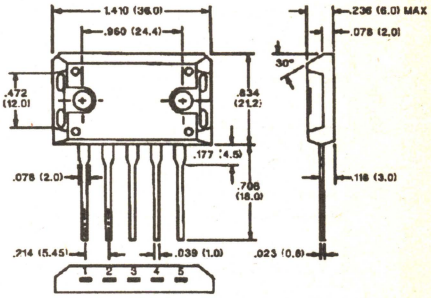

Diagram 500

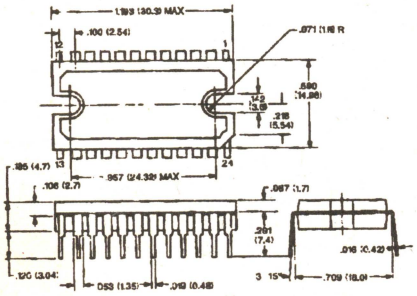

Diagram 501

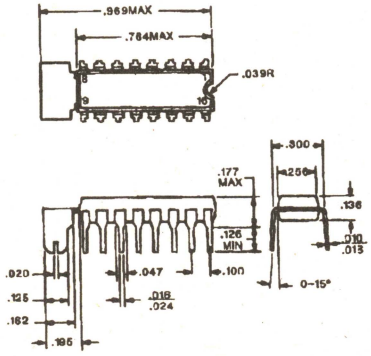

Diagram 506

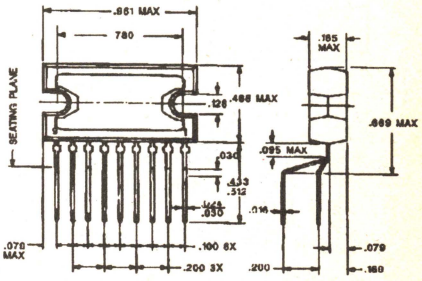

DIMENSIONAL OUTLINE DRAWINGS

Diagram 507

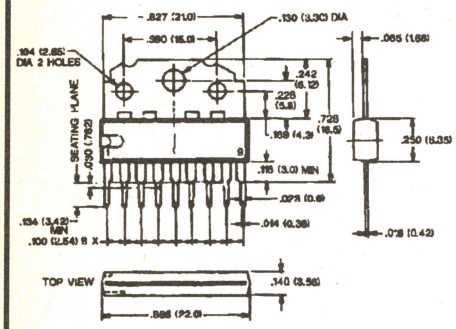

Diagram 509

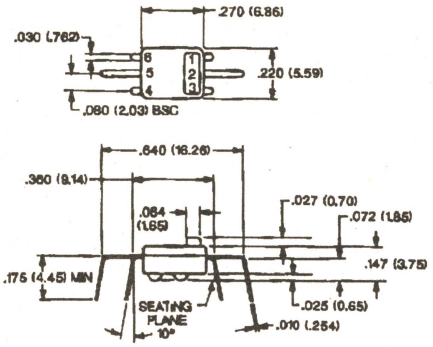

Diagram 511

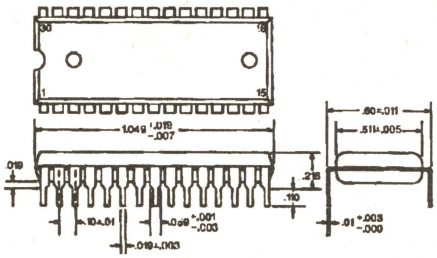

Diagram 512

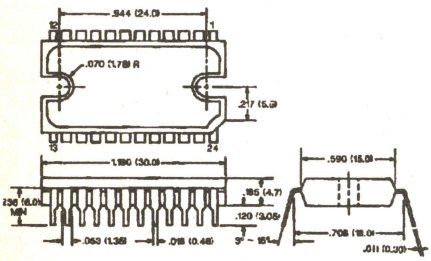

Diagram 513

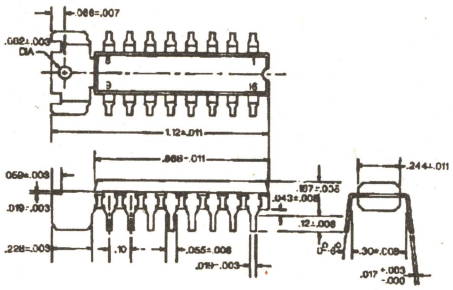

Diagram 516

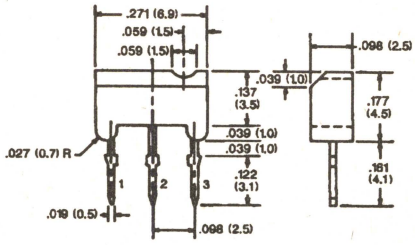

	1	2	3
b	V_{SS}	V_{DD}	Out

Diagram 517

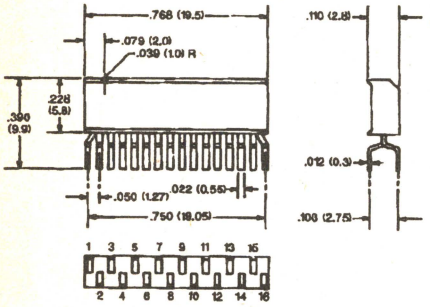

Diagram 536

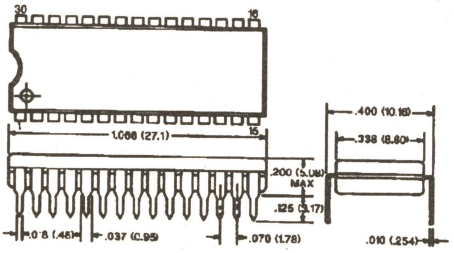

Diagram 537

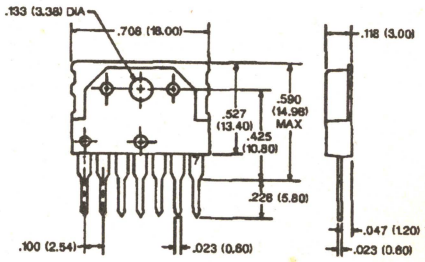

Diagram 538

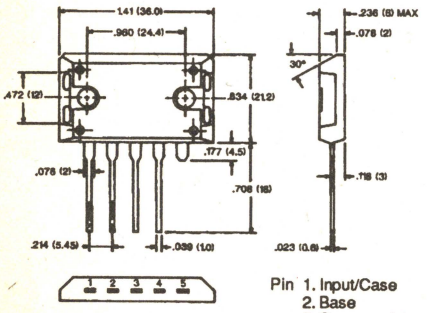

Pin 1. Input/Case
2. Base
3. Common (–)
4. Output
5. Blank

Diagram 539

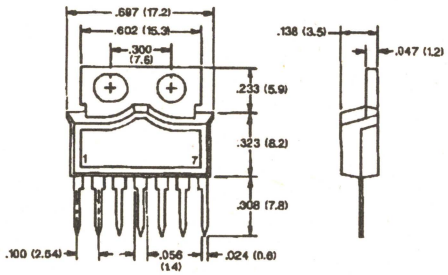

Diagram 540

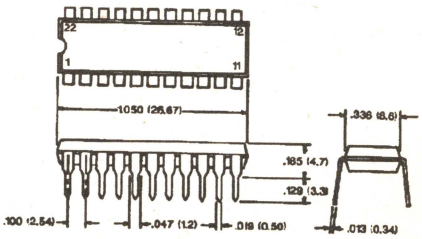

DIMENSIONAL OUTLINE DRAWINGS

Diagram 542

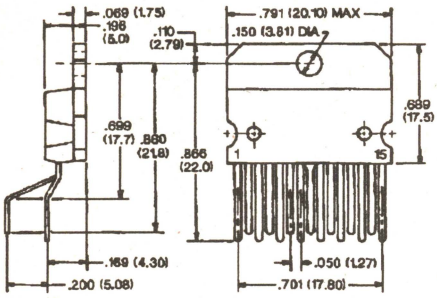

Diagram 543

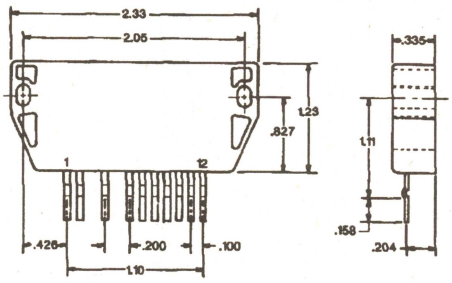

Diagram 544

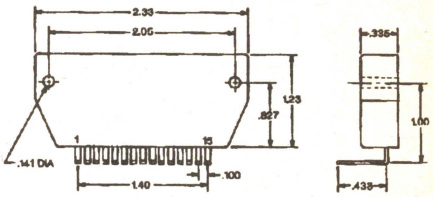

Diagram 545

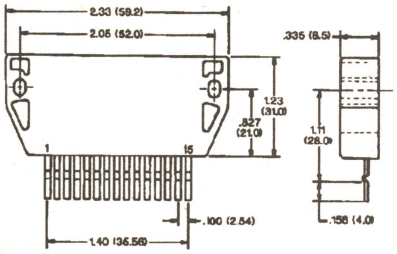

Diagram 546

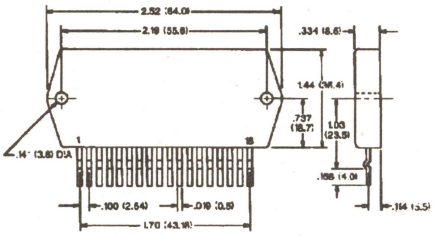

Diagram 548

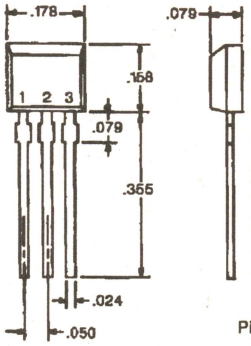

Pin 1. V_{CC}
2. GND
3. Output

Diagram 549

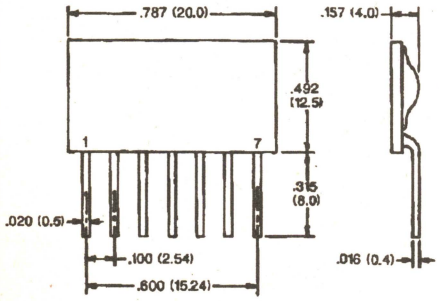

Diagram 550

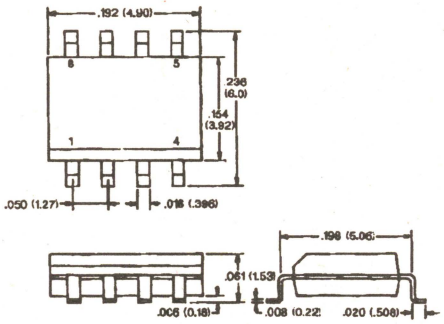

NOTE: PIN 1 ON BEVELED EDGE

Diagram 551

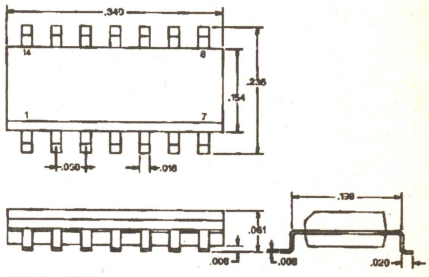

NOTE: PIN 1 ON BEVELED EDGE

Diagram 553

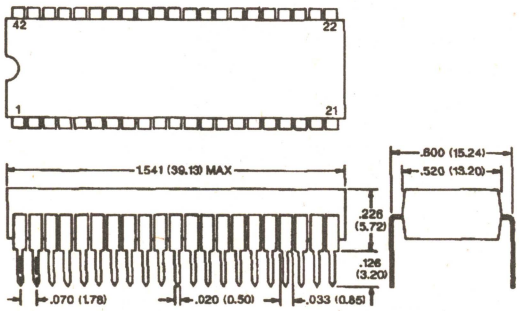

INTEGRATED CIRCUITS – CMOS

(COMPLEMENTARY METAL OXIDE SILICON)

Dual, 3–Input Plus Inverter NOR Gate — 14–Lead DIP, See Diag. 247

NTE4000

N.C.	1	14	V_{DD}
N.C.	2	13	F
A	3	12	E
B	4	11	D
C	5	10	$K = \overline{D + E + F}$
$H = \overline{A + B + C}$	6	9	L = G
V_{SS}	7	8	G

Quad, 2–Input NOR Gate — 14–Lead DIP, See Diag. 247

NTE4001B

A	1	14	V_{DD}
B	2	13	H
$J = \overline{A + B}$	3	12	G
$K = \overline{C + D}$	4	11	$M = \overline{G + H}$
C	5	10	$L = \overline{E + F}$
D	6	9	F
V_{SS}	7	8	E

Dual, 4–Input NOR Gate — 14–Lead DIP, See Diag. 247

NTE4002B

$J = \overline{A + B + C + D}$	1	14	V_{DD}
A	2	13	$K = \overline{E + F + G + H}$
B	3	12	H
C	4	11	G
D	5	10	F
N.C.	6	9	E
V_{SS}	7	8	N.C.

18–Stage Static Shift Register — 14–Lead DIP, See Diag. 247

NTE4006B

D1	1	14	V_{DD}
N.C.	2	13	D1 + 4
Clock	3	12	D2 + 5
D2	4	11	D2 + 4
D3	5	10	D3 + 4
D4	6	9	D4 + 5
V_{SS}	7	8	D4 + 4

Dual Complementary Pair Plus Inverter — 14–Lead DIP, See Diag. 247

NTE4007

Q2 (P) Source	1	14	V_{DD}, Q1 + Q2 + Q3 Substrates, Q1 (P) Drain
Q2 (P) Drain	2	13	Q1 (P) Source
Q2 Gates	3	12	Q3 (N) Drain, Q3 (P) Source
Q2 (N) Source	4	11	Q3 (P) Drain
Q2 (N) Drain	5	10	Q3 Gates
Q1 Gates	6	9	Q3 (N) Source
V_{SS}, Q1 + Q2 + Q3 (N) Substrates, Q1 (N) Source	7	8	Q1 (N) Drain

4–Bit Full Adder w/Parallel Carry Out — 16–Lead DIP, See Diag. 249

NTE4008B

A4	1	16	V_{DD}
B3	2	15	B4
A3	3	14	C_O
B2	4	13	S4
A2	5	12	S3
B1	6	11	S2
A1	7	10	S1
V_{SS}	8	9	C1

Hex Buffer/Converter (Inverting) — 16–Lead DIP, See Diag. 248

NTE4009

V_{CC}	1	16	V_{DD}
$G = \overline{A}$	2	15	$L = \overline{F}$
A	3	14	F
$H = \overline{B}$	4	13	N.C.
B	5	12	$K = \overline{E}$
$I = \overline{C}$	6	11	E
C	7	10	$J = \overline{D}$
V_{SS}	8	9	D

Quad, 2–Input NAND Gate — 14–Lead DIP, See Diag. 247

NTE4011B

A	1	14	V_{DD}
B	2	13	H
$J = \overline{AB}$	3	12	G
$K = \overline{CD}$	4	11	$M = \overline{GH}$
C	5	10	$L = \overline{EF}$
D	6	9	F
V_{SS}	7	8	E

Quad, 4–Input NAND Gate — 14–Lead DIP, See Diag. 247

NTE4012B

$J = \overline{ABCD}$	1	14	V_{DD}
A	2	13	$K = \overline{EFGH}$
B	3	12	H
C	4	11	G
D	5	10	F
N.C.	6	9	E
V_{SS}	7	8	N.C.

Dual, D–Type Flip–Flop — 14–Lead DIP, See Diag. 247

NTE4013B

Q1	1	14	V_{DD}
$\overline{Q1}$	2	13	Q2
Clock 1	3	12	$\overline{Q2}$
Reset 1	4	11	Clock 2
D1	5	10	Reset 2
Set 1	6	9	D2
V_{SS}	7	8	Set 2

8–Stage Static Shift Register Synchronous Parallel or Serial Input/ Serial Output — 16–Lead DIP, See Diag. 249

NTE4014B

P1 – 8	1	16	V_{DD}
Q6	2	15	P1 – 7
Q8	3	14	P1 – 6
P1 – 4	4	13	P1 – 5
P1 – 3	5	12	Q7
P1 – 2	6	11	Serial In
P1 – 1	7	10	Clock
V_{SS}	8	9	Parallel/ Serial Control

Dual, 4–Stage Static Shift Register w/Serial Input/ Parallel Output — 14–Lead DIP, See Diag. 247

NTE4015B

Clock B	1	16	V_{DD}
Q4 B	2	15	Data B
Q3 A	3	14	Reset B
Q2 A	4	13	Q1 B
Q1 A	5	12	Q2 B
Reset A	6	11	Q3 B
Data A	7	10	Q4 B
V_{SS}	8	9	Clock A

See Diagrams, beginning on Page 1–320

INTEGRATED CIRCUITS – CMOS

(COMPLEMENTARY METAL OXIDE SILICON)

Quad, Bilateral Switch for Transmission or Multiplexing of Analog or Digital Signals — 14–Lead DIP, See Diag. 247

NTE4016B

Signal A In	1	14	V_{DD}
Signal A Out	2	13	Control A
Signal B Out	3	12	Control D
Signal B In	4	11	Signal D In
Control B	5	10	Signal D Out
Control C	6	9	Signal C Out
V_{SS}	7	8	Signal C In

Decade Counter w/10 Decoded Outputs — 16–Lead DIP, See Diag. 249

NTE4017B

5	1	16	V_{DD}
1	2	15	Reset
0	3	14	Clock
2	4	13	Clock Enable
6	5	12	Carry Out
7	6	11	9
3	7	10	4
V_{SS}	8	9	8

Presettable Divide–by–N Counter — 16–Lead DIP, See Diag. 249

NTE4018B

Data	1	16	V_{DD}
Jam 1	2	15	Reset
Jam 2	3	14	Clock
$\overline{Q2}$	4	13	$\overline{Q5}$
$\overline{Q1}$	5	12	Jam 5
$\overline{Q3}$	6	11	$\overline{Q4}$
Jam 3	7	10	Prest Enable
V_{SS}	8	9	Jam 4

Quad, AND/OR Select Gate — 16–Lead DIP, See Diag. 249

NTE4019B

B4	1	16	V_{DD}
A3	2	15	A4
B3	3	14	Kb
A2	4	13	D4 = A4Ka + B4Kb
B2	5	12	D3 = A3Ka + B3Kb
A1	6	11	D2 = A2Ka + B2Kb
B1	7	10	D1 = A1Ka + B1Kb
V_{SS}	8	9	Ka

14–Stage Ripple–Carry Binary Counter/Divider — 16–Lead DIP, See Diag. 249

NTE4020B

Q12	1	16	V_{DD}
Q13	2	15	Q11
Q14	3	14	Q10
Q6	4	13	Q8
Q5	5	12	Q9
Q7	6	11	Reset
Q4	7	10	Ø
V_{SS}	8	9	Q1

8–Stage Static Shift Register Asynchronous Parallel Input or Synchronous Serial Input/Serial Output — 16–Lead DIP, See Diag. 249

NTE4021B

P1 – 8	1	16	V_{DD}
Q6	2	15	P1 – 7
Q8	3	14	P1 – 6
P1 – 4	4	13	P1 – 5
P1 – 3	5	12	Q7
P1 – 2	6	11	Serial In
P1 – 1	7	10	Clock
V_{SS}	8	9	Parallel/ Serial Ctl

Octal Counter Divider w/8 Decoded Outputs — 16–Lead DIP, See Diag. 249

NTE4022B

1	1	16	V_{DD}
0	2	15	Reset
2	3	14	Clock
5	4	13	Clock Enable
6	5	12	Carry Out
N.C.	6	11	4
3	7	10	7
V_{SS}	8	9	N.C.

Triple 3–Input NAND Gate — 14–Lead DIP, See Diag. 247

NTE4023B

A	1	14	V_{DD}
B	2	13	G
D	3	12	H
E	4	11	I
F	5	10	$L = \overline{GHI}$
$K = \overline{DEF}$	6	9	$J = \overline{ABC}$
V_{SS}	7	8	C

7–Stage Ripple–Carry Binary Counter/Divider — 14–Lead DIP, See Diag. 247

NTE4024B

Ø	1	14	V_{DD}
Reset	2	13	N.C.
V_O7	3	12	V_O1
V_O6	4	11	V_O2
V_O5	5	10	N.C.
V_O4	6	9	V_O3
V_{SS}	7	8	N.C.

Triple 3–Input NOR Gate — 14–Lead DIP, See Diag. 247

NTE4025B

A	1	14	V_{DD}
B	2	13	G
D	3	12	H
E	4	11	I
F	5	10	$L = \overline{G + H + I}$
$K = \overline{D + E + F}$	6	9	$J = \overline{A + B + C}$
V_{SS}	7	8	C

Decade Counter Divider w/Decoded 7–Segment Display Outputs and Display Enable — 16–Lead DIP, See Diag. 249

NTE4026B

Clock	1	16	V_{DD}
Clock Inhibit	2	15	Reset
Display Enable In	3	14	Ungated "C" Segment Out
Display Enable Out	4	13	c
Carry Out	5	12	b
f	6	11	e
g	7	10	a
V_{SS}	8	9	d

Dual, J–K Master–Slave Flip–Flop — 16–Lead DIP, See Diag. 249

NTE4027B

Q2	1	16	V_{DD}
$\overline{Q2}$	2	15	Q1
Clock 2	3	14	$\overline{Q1}$
Reset 2	4	13	Clock 1
K2	5	12	Reset 1
J2	6	11	K1
Set 2	7	10	J1
V_{SS}	8	9	Set 1

See Diagrams, beginning on Page 1–320

INTEGRATED CIRCUITS – CMOS

(COMPLEMENTARY METAL OXIDE SILICON)

BCD–to–Decimal Decoder — 16–Lead DIP, See Diag. 249

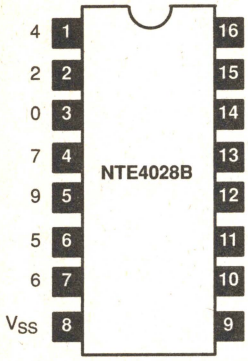

Presettable Up/Down Counter, Binary or BCD Decade Decoder — 16–Lead DIP, See Diag. 249

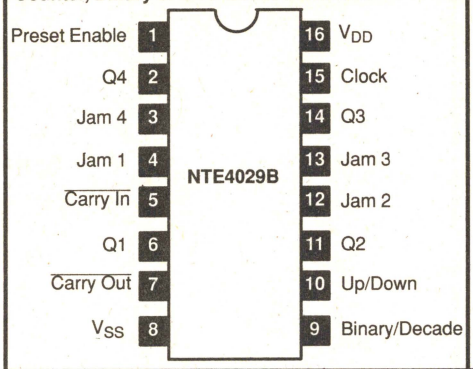

Quad, Exclusive OR Gate — 14–Lead DIP, See Diag. 247

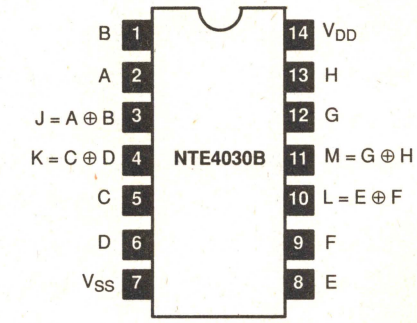

64–Stage Static Shift Register — 16–Lead DIP, See Diag. 249

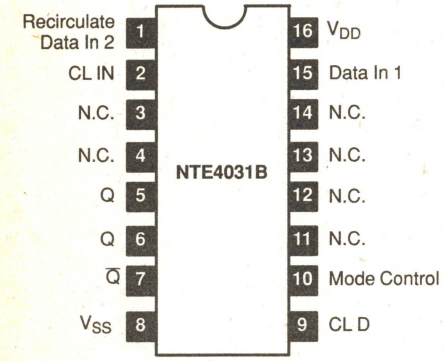

Triple Serial Logic Adder — 16–Lead DIP, See Diag. 249

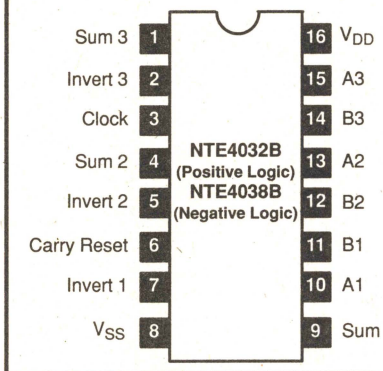

Decade Counter Divider w/Decoded 7–Segment Display Outputs and Ripple Blanking — 16–Lead DIP, See Diag. 249

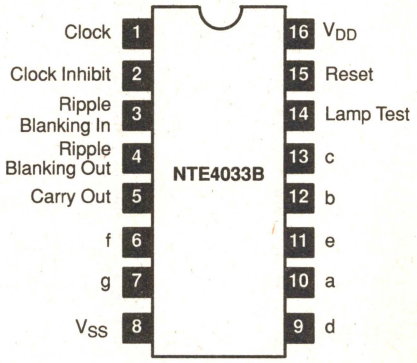

8–Stage Static Bidirectional Parallel/Serial Input/Output Bus Register — 24–Lead DIP, See Diag. 293

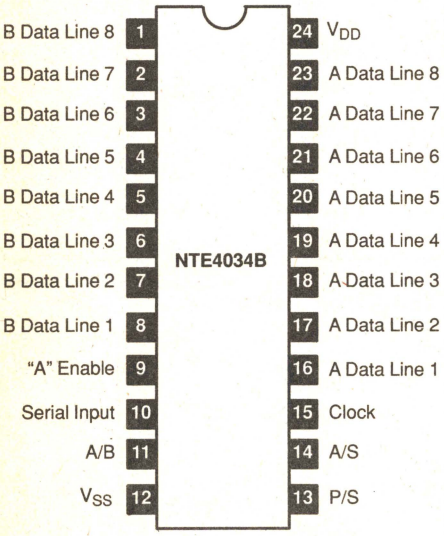

4–Stage Parallel In/Parallel Out Shift Register w/J–K Serial Input and True Complement Output — 16–Lead DIP, See Diag. 249

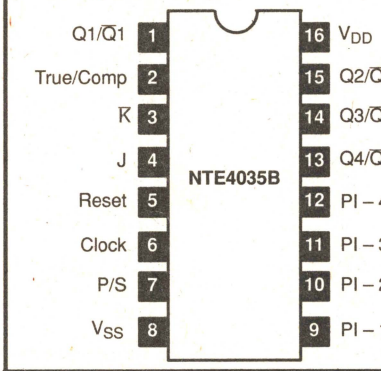

12–Stage Ripple–Carry Binary Counter/Divider — 16–Lead DIP, See Diag. 249

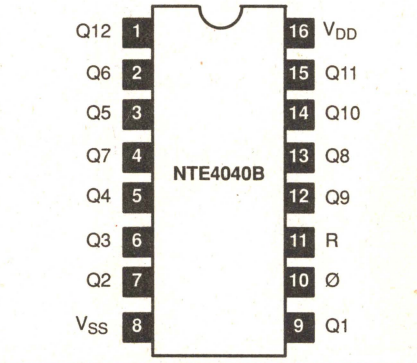

Quad, True/Complement Buffer — 14–Lead DIP, See Diag. 247

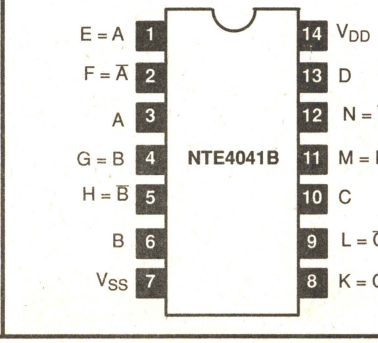

Quad, Clocked D–Type Latch — 16–Lead DIP, See Diag. 249

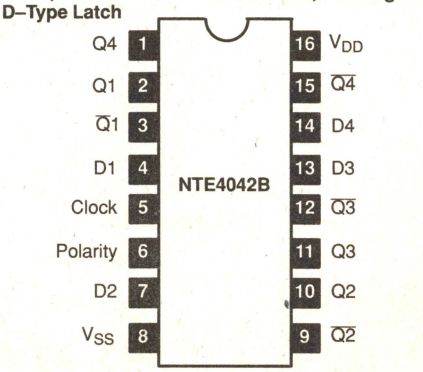

See Diagrams, beginning on Page 1–320

INTEGRATED CIRCUITS – CMOS

(COMPLEMENTARY METAL OXIDE SILICON)

Quad, 3–State NOR R/S Latch — 16–Lead DIP, See Diag. 249

NTE4043B

Q4	1	16	V_{DD}
Q1	2	15	R4
R1	3	14	S4
S1	4	13	N.C.
Enable	5	12	S3
S2	6	11	R3
R2	7	10	Q3
V_{SS}	8	9	Q2

Quad, 3–State NAND R/S Latch — 16–Lead DIP, See Diag. 249

NTE4044B

Q4	1	16	V_{DD}
N.C.	2	15	S4
S1	3	14	R4
R1	4	13	Q1
Enable	5	12	R3
R2	6	11	S3
S2	7	10	Q3
V_{SS}	8	9	Q2

21–Stage Counter — 16–Lead DIP, See Diag. 249

NTE4045B

S_P	1	16	Ø 1
S_N	2	15	Ø 2
V_{DD}	3	14	V_{SS}
N.C.	4	13	N.C.
N.C.	5	12	N.C.
N.C.	6	11	N.C.
Y	7	10	N.C.
Y + d	8	9	N.C.

Note: Observe power supply connections, V_{DD} is Pin3 & V_{SS} is Pin14, **NOT** Pins 16 & 8 respectively as in other 4000 Series 16–Lead devices

Phase–Locked Loop (PLL) — 16–Lead DIP, See Diag. 249

NTE4046B

Phase Pulses	1	16	V_{DD}
Phase Comp 1 Out	2	15	Zener
Comparator In	3	14	Signal In
VCO Out	4	13	Phase Comp 2 Out
Inhibit	5	12	R2 to V_{SS}
C1 (1)	6	11	R1 to V_{SS}
C1 (2)	7	10	Demodulator Out
V_{SS}	8	9	VCO In

Low Power Monostable/Astable Multivibrator — 14–Lead DIP, See Diag. 247

NTE4047B

C	1	14	V_{DD}
R	2	13	OSC Out
R–C Common	3	12	Retrigger
$\overline{\text{Astable}}$	4	11	$\overline{Q}$
Astable	5	10	Q
(–) Trigger	6	9	Ext Reset
V_{SS}	7	8	(+) Trigger

Multi–Function Expandable, 8–Input Gate — 16–Lead DIP, See Diag. 249

NTE4048B

J (Output)	1	16	V_{DD}
Kd	2	15	Expand
Input H	3	14	Input A
Input G	4	13	Input B
Input F	5	12	Input C
Input E	6	11	Input D
Kb	7	10	Ka
V_{SS}	8	9	Kc

Hex Buffer/Converter — 16–Lead DIP, See Diag. 249

NTE4049 (Inverting) NTE4050B (Non–Inverting)

V_{DD}	1	16	N.C.
G = A	2	15	L = F
A	3	14	F
H = B	4	13	NC
B	5	12	K = E
I = C	6	11	E
C	7	10	J = D
V_{SS}	8	9	D

Note: On NTE4050B, Pins 2, 4, 6, 10, 12, and 15 are inverted.

Analog, Single 8–Channel Multiplexer/Demultiplexer — 16–Lead DIP, See Diag. 249

NTE4051B

Channel 4 In/Out	1	16	V_{DD}
Channel 6 In/Out	2	15	Channel 2 In/Out
Com Out/In	3	14	Channel 1 In/Out
Channel 7 In/Out	4	13	Channel 0 In/Out
Channel 5 In/Out	5	12	Channel 3 In/Out
INH	6	11	A
V_{EE}	7	10	B
V_{SS}	8	9	C

Analog, Differential 4–Channel Multiplexer — 16–Lead DIP, See Diag. 249

NTE4052B

In/Out 0Y	1	16	V_{DD}
In/Out 2Y	2	15	In/Out 2X
Out/In Y	3	14	In/Out 1X
In/Out 3Y	4	13	Out/In X
In/Out 1Y	5	12	In/Out 0X
INH	6	11	In/Out 3X
V_{EE}	7	10	A
V_{SS}	8	9	B

Triple 2–Channel Analog Multiplexer — 16–Lead DIP, See Diag. 249

NTE4053B

by In/Out	1	16	V_{DD}
bx In/Out	2	15	Out/In bx or by
cy In/Out	3	14	Out/In ax or ay
Out/In cx or cy	4	13	ay In/Out
In/Out cx	5	12	ax In/Out
INH	6	11	A
V_{EE}	7	10	B
V_{SS}	8	9	C

BCD–to–7–Segment Decoder/Driver — 16–Lead DIP, See Diag. 249

NTE4055B NTE4056B

Display Freq Out/ Strobe	1	16	V_{DD}
BCD Inputs: 2^2	2	15	f
BCD Inputs: 2^1	3	14	g
BCD Inputs: 2^3	4	13	e
BCD Inputs: 2^0	5	12	d
Dis Freq In	6	11	c
Vee	7	10	b
V_{SS}	8	9	a

7–Segment Outputs

NTE4055B w/Display–Frequency Output — NTE4056B w/Strobed–Latch Function

See Diagrams, beginning on Page 1–320

(COMPLEMENTARY METAL OXIDE SILICON)

14–Stage Ripple–Carry Binary Counter/Divider and OSC — 16–Lead DIP, See Diag. 249

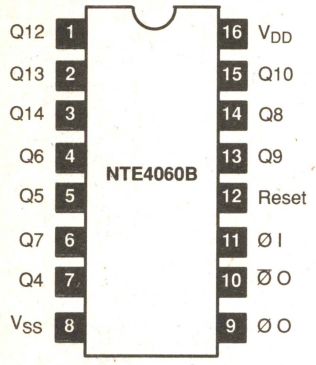

4–Bit Magnitude Comparator (High Voltage Type) — 16–Lead DIP, See Diag. 249

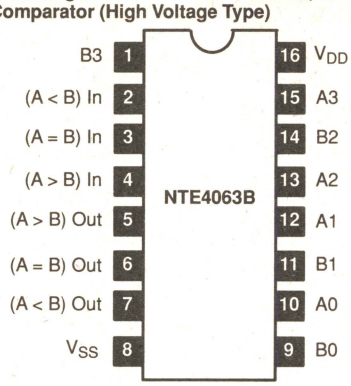

Quad, Bilateral Switch — 14–Lead DIP, See Diag. 247

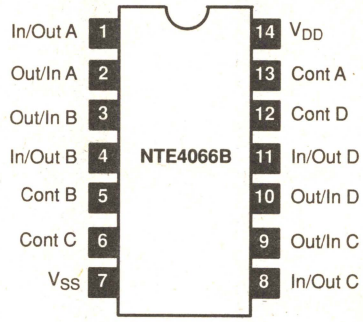

Analog Single 16–Channel Multiplexer/Demultiplexer — 24–Lead DIP, See Diag. 343

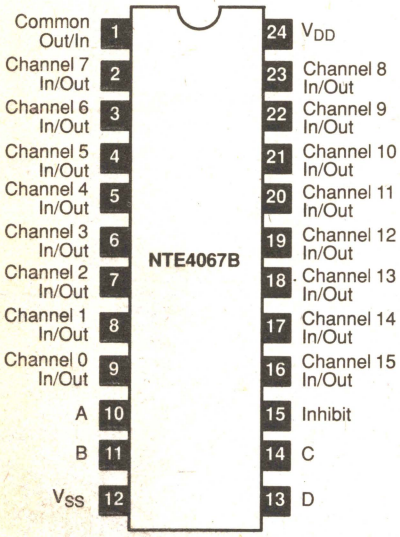

8–Input NAND/AND Gate (High Voltage Type) — 14–Lead DIP, See Diag. 247

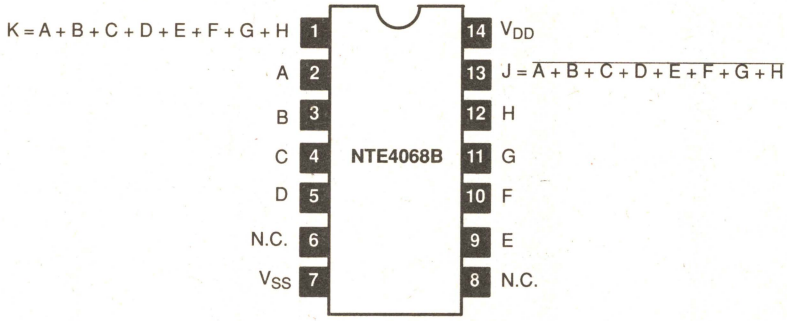

Hex Inverter (High Voltage Type) — 14–Lead DIP, See Diag. 247

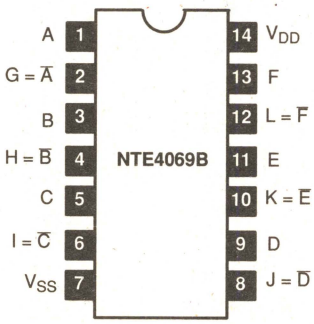

Quad, Exclusive OR Gate — 14–Lead DIP, See Diag. 247

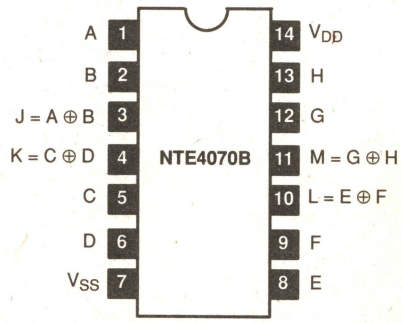

Quad, 2–Input OR Gate — 14–Lead DIP, See Diag. 247

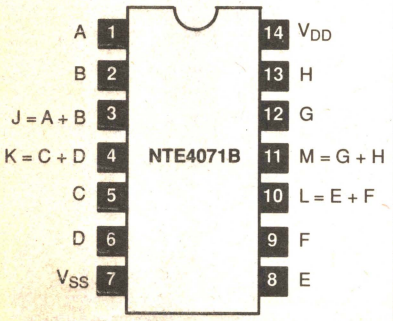

Dual, 4–Input OR Gate — 14–Lead DIP, See Diag. 247

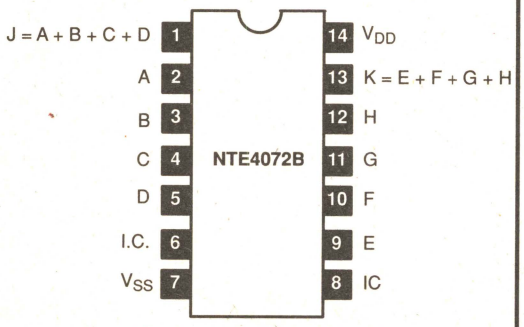

Note: I.C. = Internal Connection. **DO NOT USE**

Triple 3–Input AND Gate — 14–Lead DIP, See Diag. 247

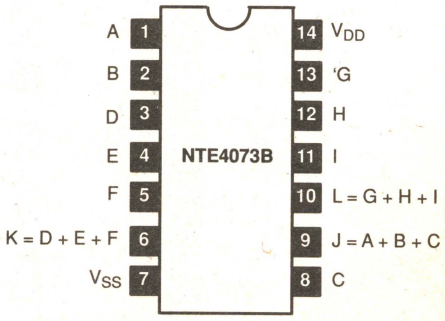

See Diagrams, beginning on Page 1–320

INTEGRATED CIRCUITS – CMOS

(COMPLEMENTARY METAL OXIDE SILICON)

Triple 3–Input OR Gate — 14–Lead DIP, See Diag. 247

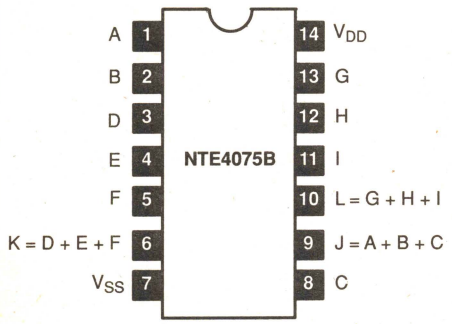

4–Bit D–Type Register (High Voltage Type) — 16–Lead DIP, See Diag. 249

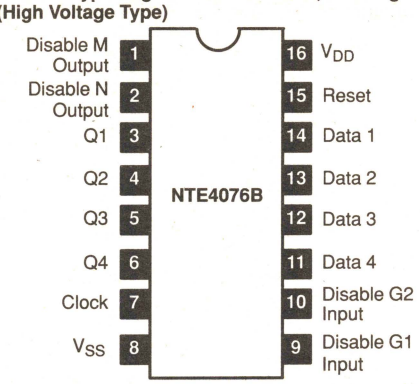

Quad, Exclusive NOR Gate — 14–Lead DIP, See Diag. 247

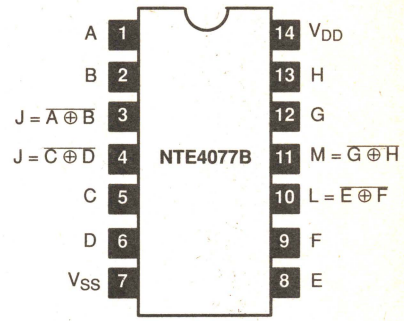

8–Input NOR/OR Gate — 14–Lead DIP, See Diag. 247

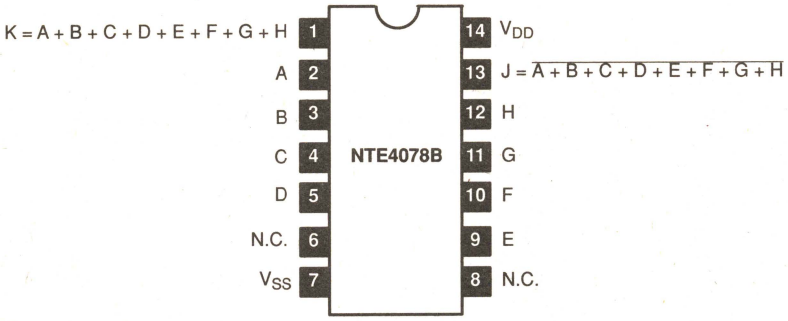

Quad, 2–Input AND Gate — 14–Lead DIP, See Diag. 247

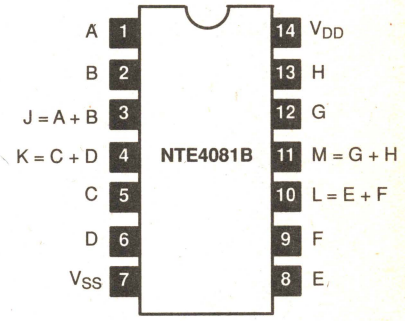

Dual, 4–Input AND Gate — 14–Lead DIP, See Diag. 247

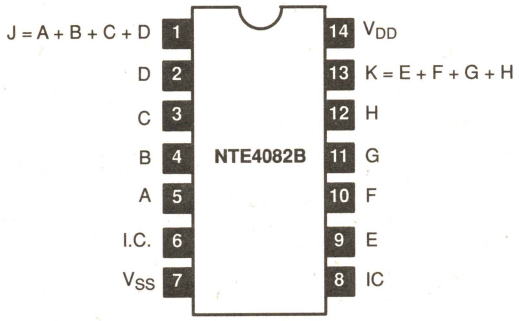

Note: I.C. = Internal Connection. **DO NOT USE**

Dual, 2–Wide, 2–Input AND/OR Invert Gate — 14–Lead DIP, See Diag. 247

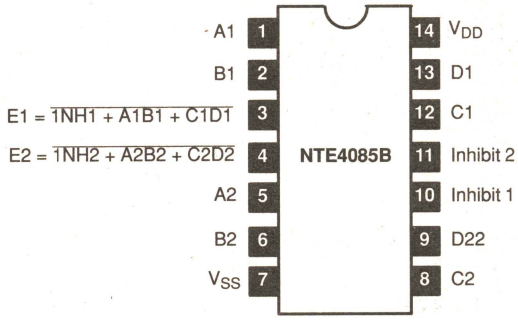

Expandable, 4–Wide, 2–Input AND/OR Invert Gate — 14–Lead DIP, See Diag. 247

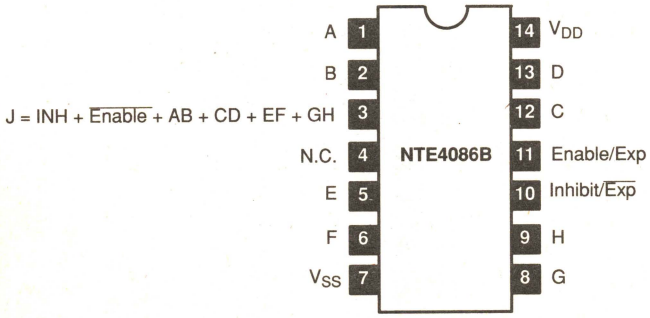

Binary Rate Multiplier — 16–Lead DIP, See Diag. 249

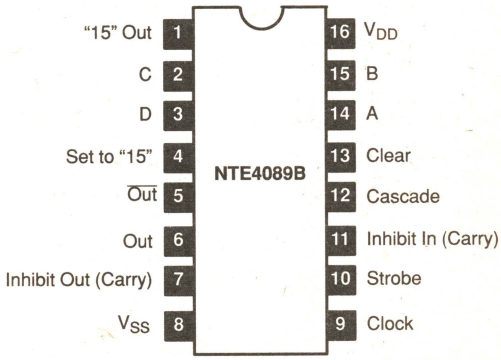

See Diagrams, beginning on Page 1–320

INTEGRATED CIRCUITS – CMOS

(COMPLEMENTARY METAL OXIDE SILICON)

Quad, 2–Input NAND Schmitt Trigger — 14–Lead DIP, See Diag. 247

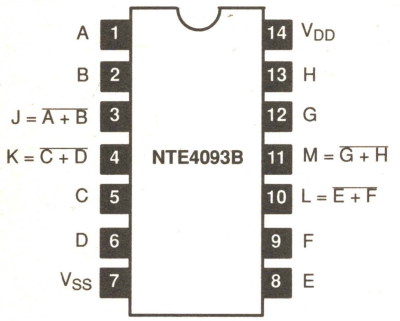

8–Stage Shift and Storage Bus Register — 16–Lead DIP, See Diag. 249

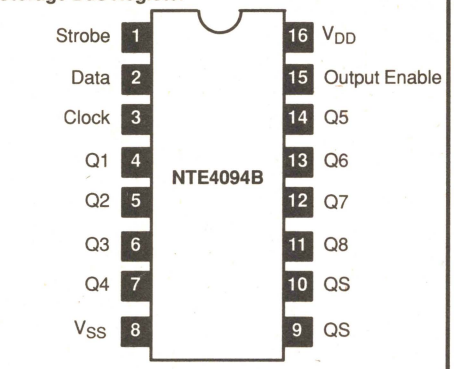

Gated J–K Master/ Slave Flip–Flop w/Set–Reset Capability Non–Inverting J and K Inputs — 14–Lead DIP, See Diag. 247

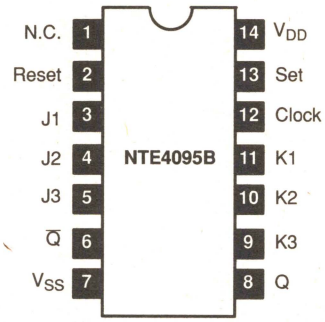

Gated J–K Master/ Slave Flip–Flop w/Set–Reset Capability Inverting and Non–Inverting J and K Inputs — 14–Lead DIP, See Diag. 247

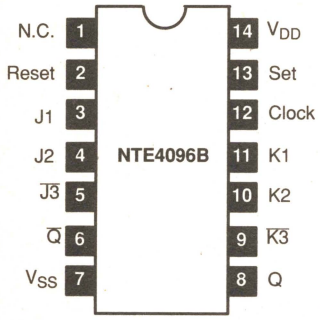

Differential 8–Channel Multiplexer/Demultiplexer — 24–Lead DIP, See Diag. 343

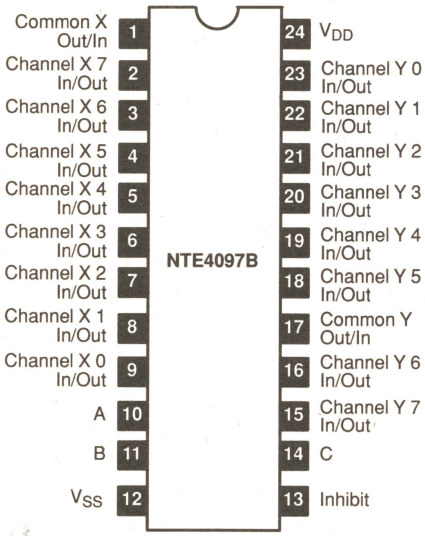

Dual, Monostable Multivibrator — 16–Lead DIP, See Diag. 249

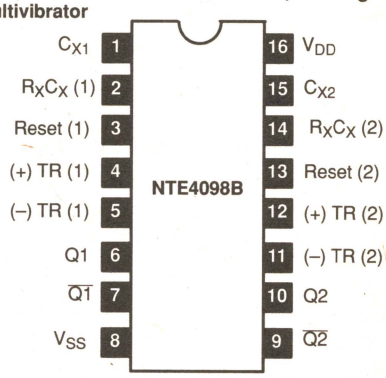

Note: Pins 1, 8, and 15 are electrically connected internally

8–Bit Addressable Latch — 16–Lead DIP, See Diag. 249

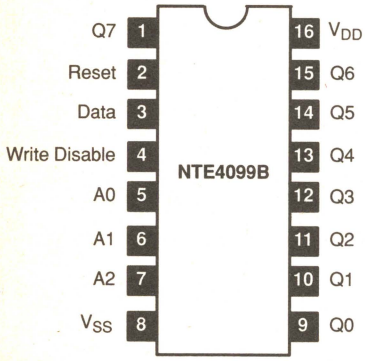

Dual, 4–Input NAND Gate, 2–Input NOR/OR Gate, 8–Input AND/NAND Gate — 16–Lead DIP, See Diag. 249

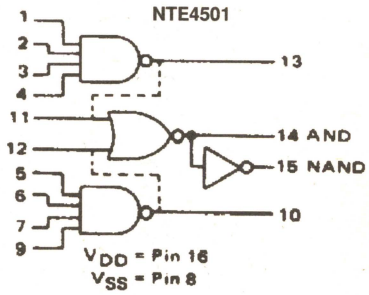

Use dotted connection externally to obtain 8–Input AND/NAND
Note: Pin14 must **not** be used as an input to the inverter.

Strobed Hex Inverter/Buffer — 16–Lead DIP, See Diag. 249

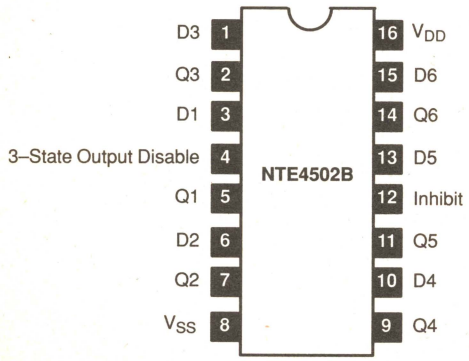

Hex 3–State Non–Inverting Buffer — 16–Lead DIP, See Diag. 249

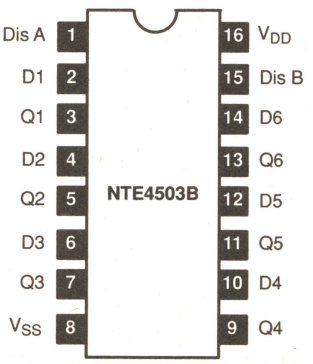

See Diagrams, beginning on Page 1–320

INTEGRATED CIRCUITS – CMOS

(COMPLEMENTARY METAL OXIDE SILICON)

Dual, 4–Bit Latch — 24–Lead DIP, See Diag. 343

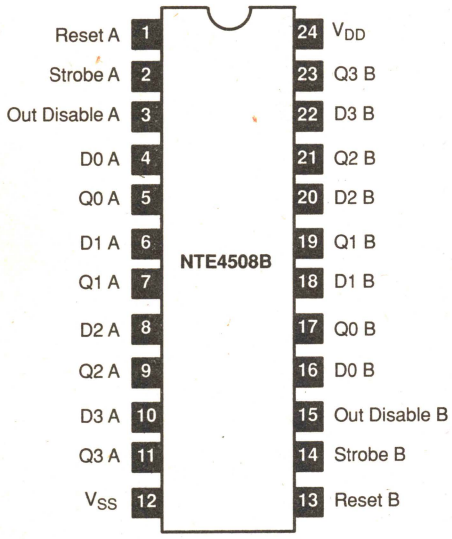

Presettable Up/Down BCD Counter — 16–Lead DIP, See Diag. 249

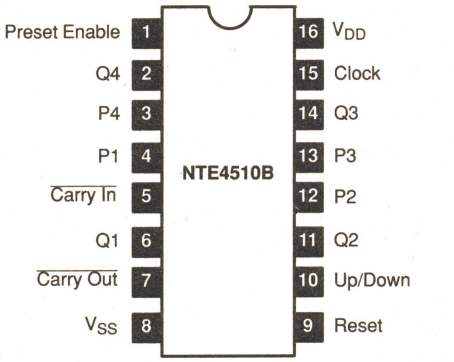

BCD–to–7–Segment Latch Decoder Driver — 16–Lead DIP, See Diag. 249

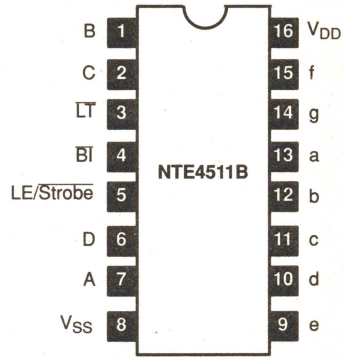

8–Channel Data Selector — 16–Lead DIP, See Diag. 249

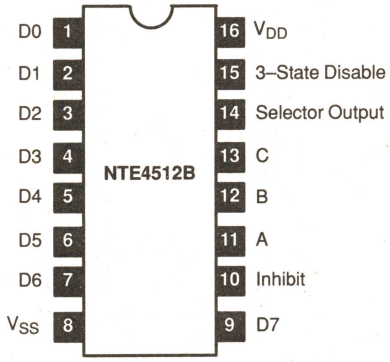

BCD–to–7–Segment Latch Decoder Driver — 18–Lead DIP, See Diag. 340

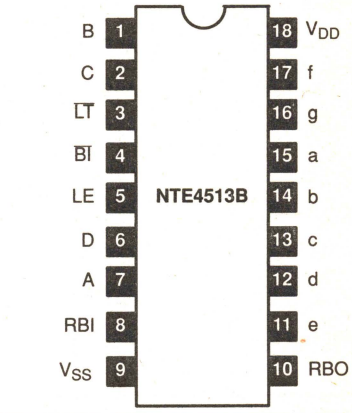

4–Bit Latch/ 4–to–16 Line Decoder — 24–Lead DIP, See Diag. 293

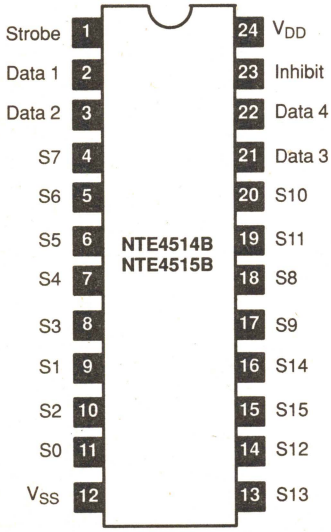

NTE4514B Output "High" on Select
NTE4515B Output "Low" on Select

Presettable Up/Down Binary Counter — 16–Lead DIP, See Diag. 249

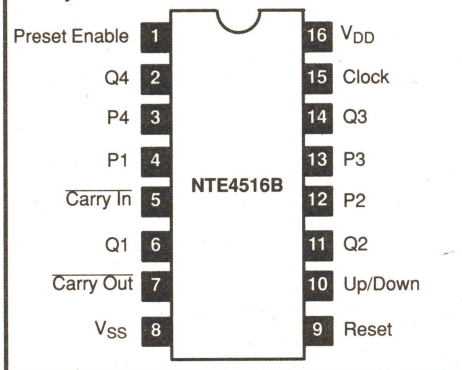

Dual, 64–Stage Static Shift Register — 16–Lead DIP, See Diag. 249

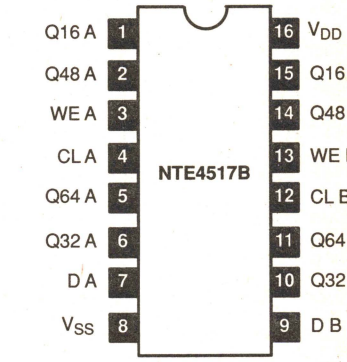

Dual, Up/Down Counter — 16–Lead DIP, See Diag. 249

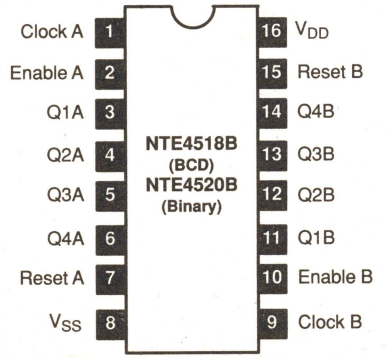

24–Stage Frequency Divider — 16–Lead DIP, See Diag. 249

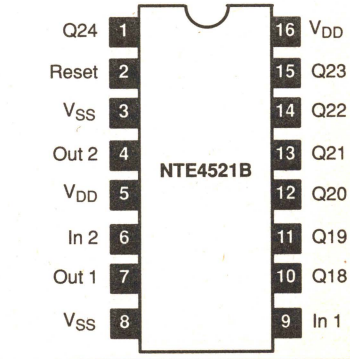

See Diagrams, beginning on Page 1–320

(COMPLEMENTARY METAL OXIDE SILICON)

Programmable Divide–by–N 4–Bit Down Counter — 16–Lead DIP, See Diag. 249

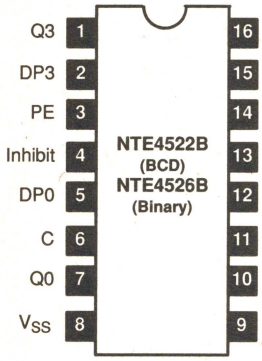

BCD Rate Multiplier — 16–Lead DIP, See Diag. 249

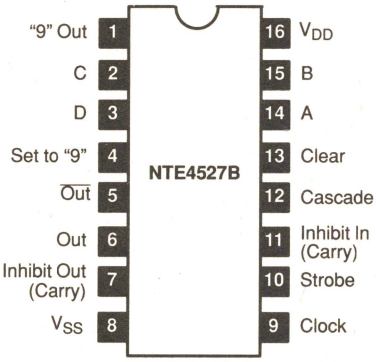

Dual, Retriggerable/ Resettable Monostable Multivibrator — 16–Lead DIP, See Diag. 249

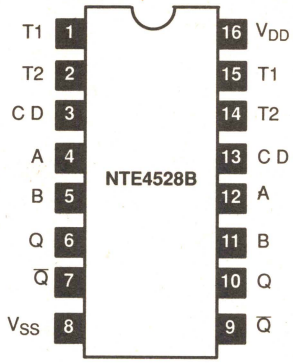

Dual, 4–Channel Analog Data Selector — 16–Lead DIP, See Diag. 249

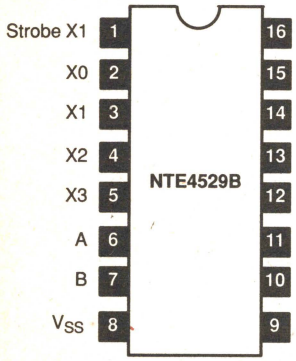

12–Bit Parity Tree — 16–Lead DIP, See Diag. 249

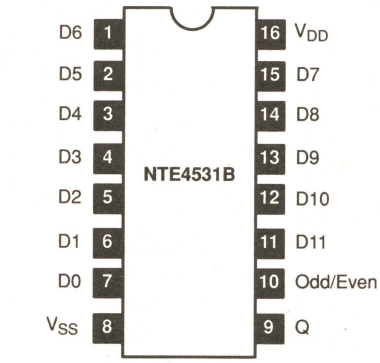

8–Bit Priority Encoder — 16–Lead DIP, See Diag. 249

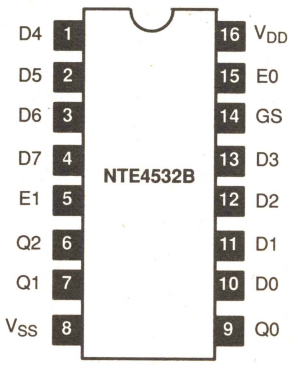

Programmable Timer — 16–Lead DIP, See Diag. 249

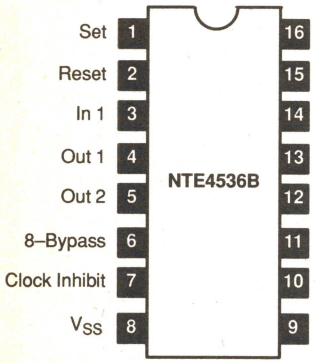

Dual, Precision Monostable Multivibrator — 16–Lead DIP, See Diag. 248

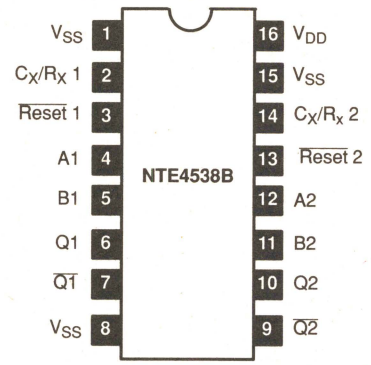

Dual, 4–Channel Data Selector/Multiplexer — 16–Lead DIP, See Diag. 249

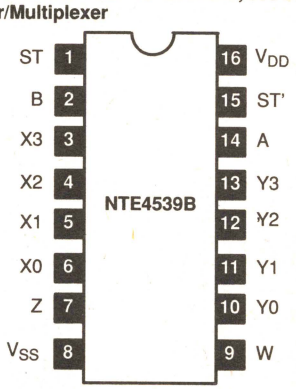

Programmable Timer — 14–Lead DIP, See Diag. 247

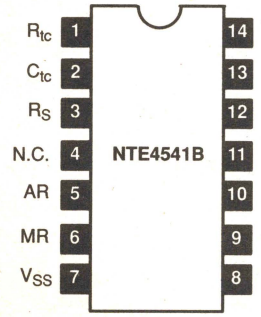

BCD–to–7–Segment Latch/Decoder/Driver for Liquid Crystals — 16–Lead DIP, See Diag. 249

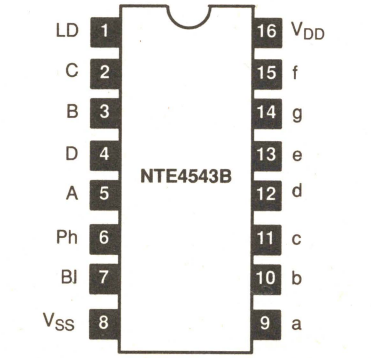

BCD–to–7–Segment Decoder/Driver — 16–Lead DIP, See Diag. 249

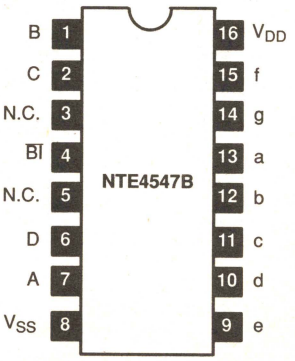

See Diagrams, beginning on Page 1–320

(COMPLEMENTARY METAL OXIDE SILICON)

Quad, 2–Input Analog Multiplexer/Demultiplexer — 16–Lead DIP, See Diag. 249

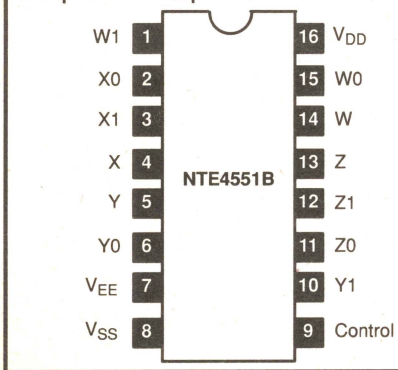

3–Digit BCD Counter — 16–Lead DIP, See Diag. 249

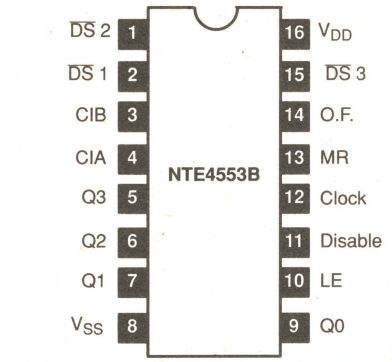

Dual, Binary to 1–of–4 Decoder/Demultiplexer (Output "High" on Select) — 16–Lead DIP, See Diag. 249

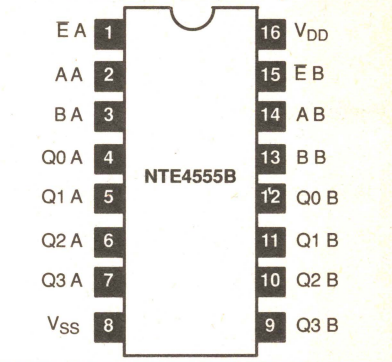

Dual, Binary to 1–of–4 Decoder/Demultiplexer (Output "Low" on Select) — 16–Lead DIP, See Diag. 249

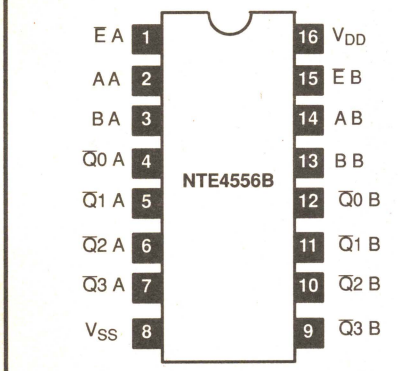

BCD–to–7–Segment Decoder — 16–Lead DIP, See Diag. 249

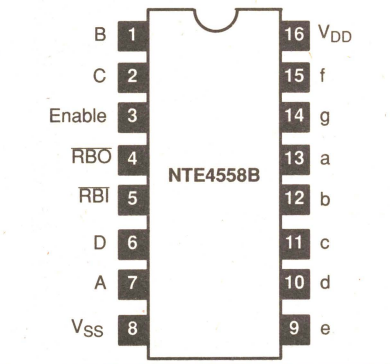

Industrial Time Base Generator — 16–Lead DIP, See Diag. 249

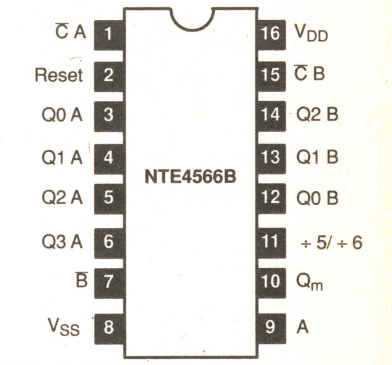

Programmable Divide–by–N Dual 4–Bit BCD/Binary Counter — 16–Lead DIP, See Diag. 249

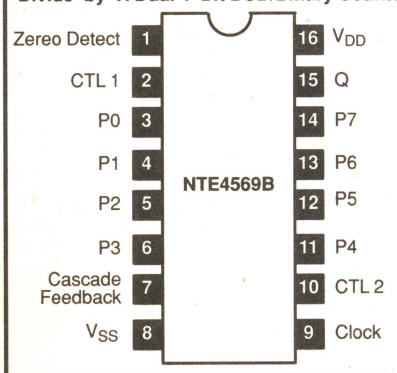

Dual Schmitt Trigger — 16–Lead DIP, See Diag. 249

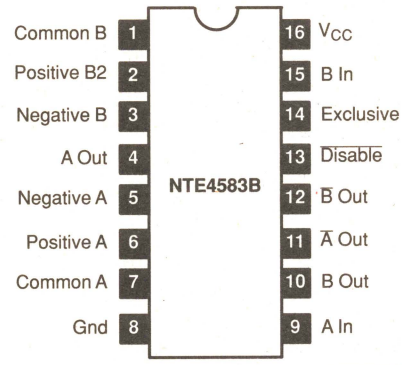

Hex Schmitt Trigger — 14–Lead DIP, See Diag. 247

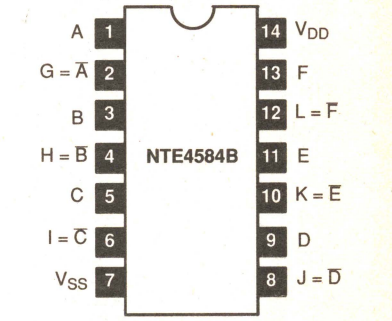

4–Bit Magnitude Comparator — 16–Lead DIP, See Diag. 249

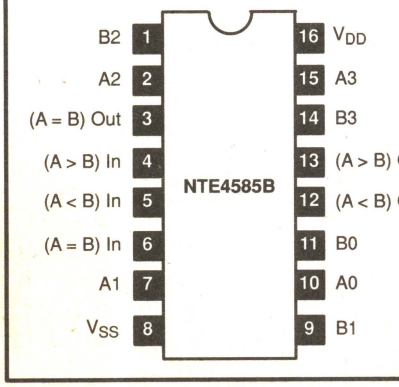

8–Bit Latch — 16–Lead DIP, See Diag. 249

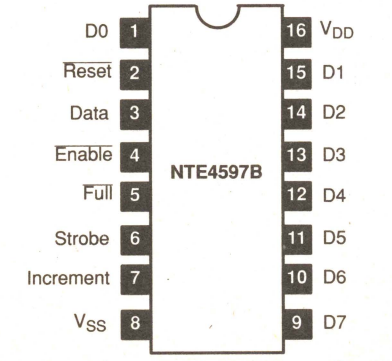

8–Bit Latch — 18–Lead DIP, See Diag. 340

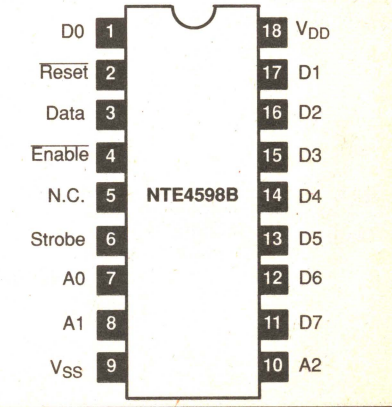

See Diagrams, beginning on Page 1–320

(COMPLEMENTARY METAL OXIDE SILICON)

4–Bit Magnitude Comparator — 16–Lead DIP, See Diag. 249

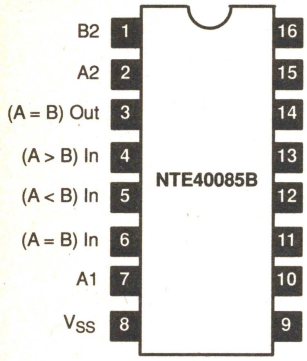

Hex 3–State Buffer — 16–Lead DIP, See Diag. 249

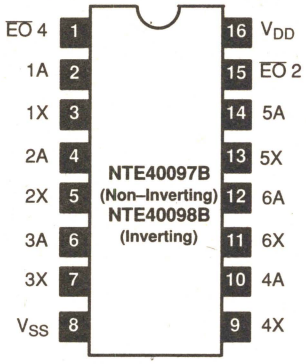

32–Stage Static Left/Right Shift Register — 16–Lead DIP, See Diag. 249

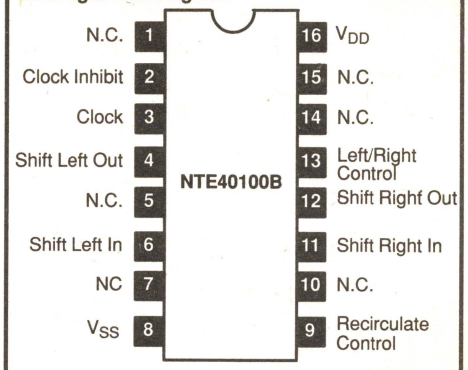

Hex Schmitt Trigger — 14–Lead DIP, See Diag. 247

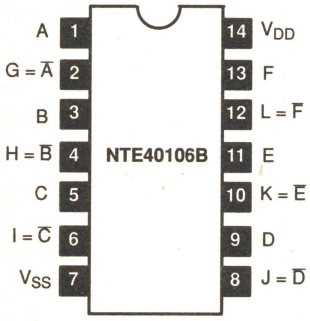

Synchronous Programmable 4–Bit Counter — 16–Lead DIP, See Diag. 249

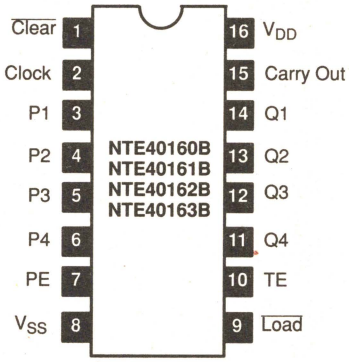

NTE40160B BCD Counter w/Asynchronous Clear
NTE40162B BCD Counter w/Synchronous Clear
NTE40161B Binary Counter w/Asynchronous Clear
NTE40163B Binary Counter w/Synchronous Clear

Hex D–Type Flip–Flop — 16–Lead DIP, See Diag. 249

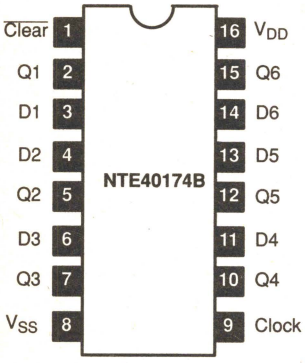

Quad, D–Type Flip–Flop — 16–Lead DIP, See Diag. 249

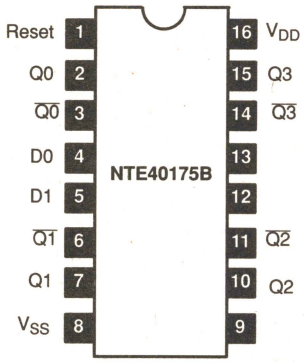

Look Ahead Carry Generator — 16–Lead DIP, See Diag. 249

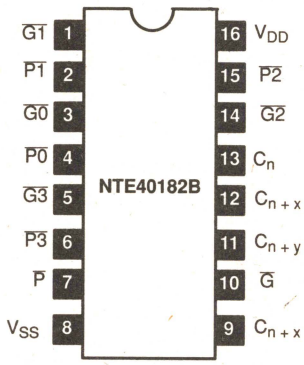

Presettable Up/Down Counter (Dual Clock w/Reset) — 16–Lead DIP, See Diag. 249

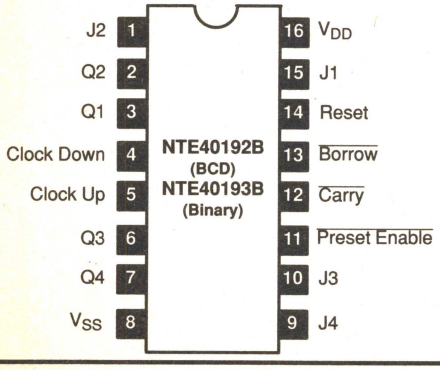

4–Bit Bidirectional Universal Shift Register w/Asynchronous Master Reset — 16–Lead DIP, See Diag. 249

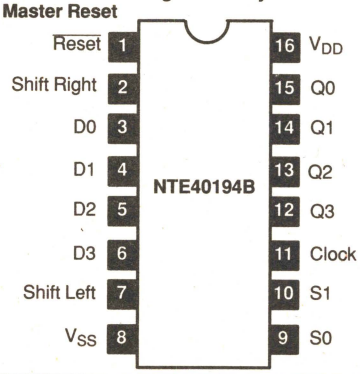

4–Bit Shift Register — 16–Lead DIP, See Diag. 249

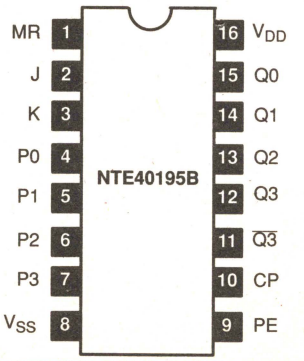

See Diagrams, beginning on Page 1–320

INTEGRATED CIRCUITS – TTL

(TRANSISTOR TRANSISTOR LOGIC)

Tri–State Dual 4:1 Multiplexer — 16–Lead DIP, See Diag. 249

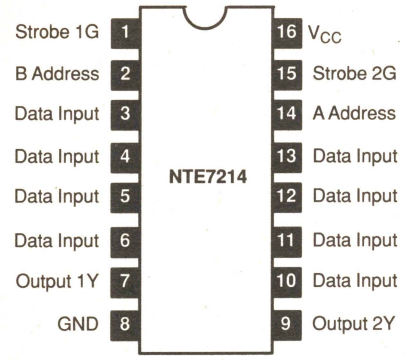

Quad 2–Input Pos NAND Gate — 14–Lead DIP, See Diag. 247

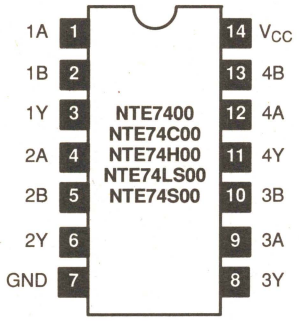

Quad 2–Input Pos NAND Gate w/Open Collector Outputs — 14–Lead DIP, See Diag. 247

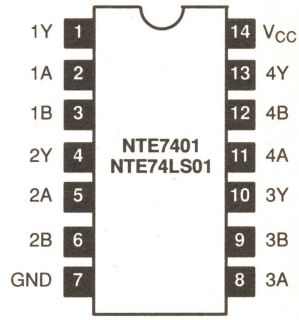

Quad 2–Input Pos NAND Gate w/Open Collector Outputs — 14–Lead DIP, See Diag. 247

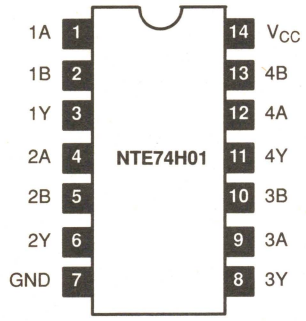

Quad 2–Input Pos NOR Gate — 14–Lead DIP, See Diag. 247

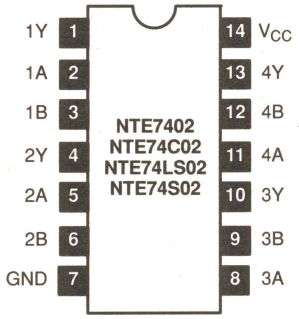

Quad 2–Input Pos NAND Gate w/Open Collector Outputs — 14–Lead DIP, See Diag. 247

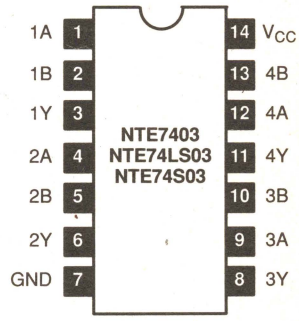

Hex Inverter — 14–Lead DIP, See Diag. 247

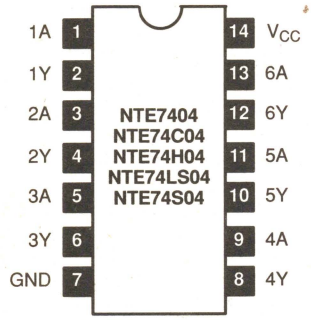

Hex Inverter w/Open Collector Outputs — 14–Lead DIP, See Diag. 247

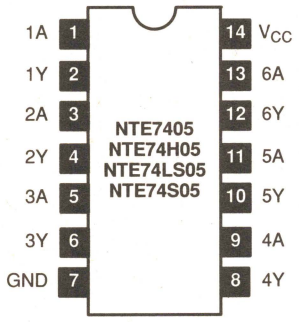

Hex Inverter Buffer/ Driver w/Open Collector High Vltg Outputs — 14–Lead DIP, See Diag. 247

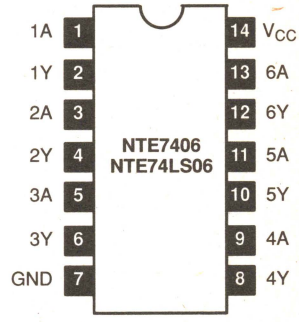

Hex Buffer Driver w/Open Collector High Vltg Output — 14–Lead DIP, See Diag. 247

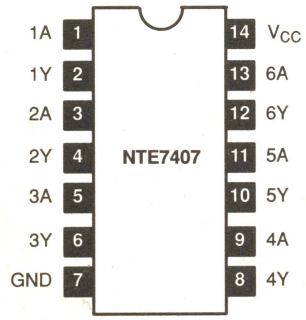

Quad 2–Input Pos AND Gate — 14–Lead DIP, See Diag. 247

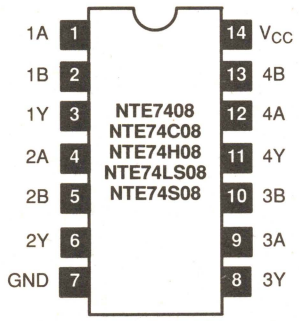

Quad 2–Input Pos AND Gate w/Open Collector Outputs — 14–Lead DIP, See Diag. 247

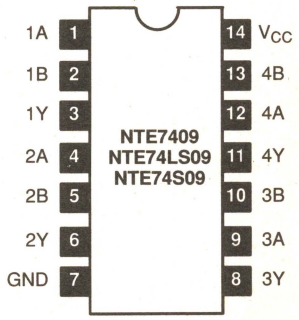

See Diagrams, beginning on Page 1–320

INTEGRATED CIRCUITS – TTL

(TRANSISTOR TRANSISTOR LOGIC)

Triple 3–Input Pos NAND Gate — 14–Lead DIP, See Diag. 247

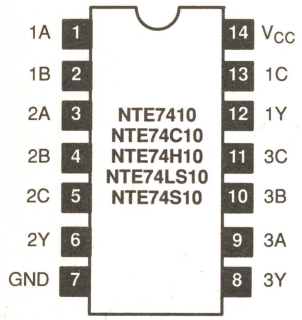

Triple 3–Input Pos AND Gate — 14–Lead DIP, See Diag. 247

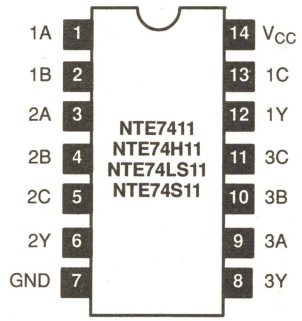

Triple 3–Input Pos NAND Gate w/Open Collector Outputs — 14–Lead DIP, See Diag. 247

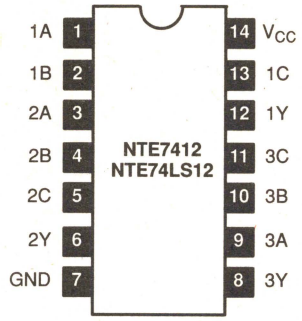

Dual 4–Input NAND Schmitt Trigger — 14–Lead DIP, See Diag. 247

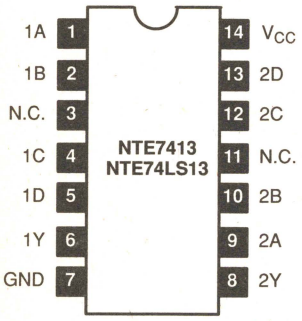

Hex Schmitt Trigger — 14–Lead DIP, See Diag. 247

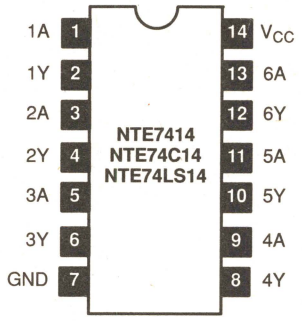

Triple 3–Input AND Gate w/Open Collector Outputs — 14–Lead DIP, See Diag. 247

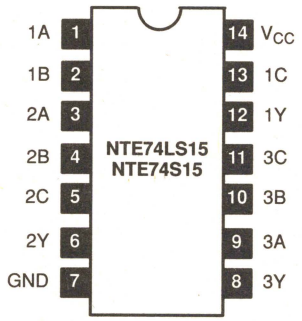

Hex Inverter Buffer/Driver w/Open Collector High Vltg Outputs — 14–Lead DIP, See Diag. 247

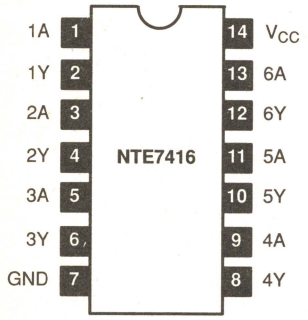

Hex Buffer/Driver w/Open Collector High Vltg Outputs — 14–Lead DIP, See Diag. 247

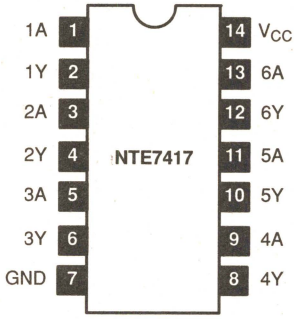

Dual 4–Input NAND Gate — 14–Lead DIP, See Diag. 247

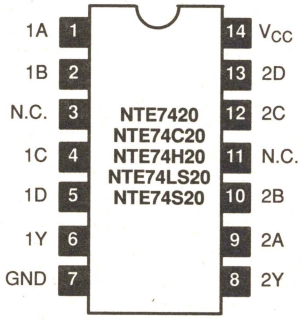

Dual 4–Input AND Gate — 14–Lead DIP, See Diag. 247

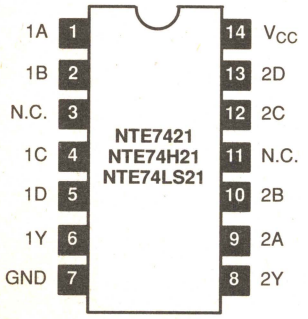

Dual 4–Input NAND Gate w/Open Collector Outputs — 14–Lead DIP, See Diag. 247

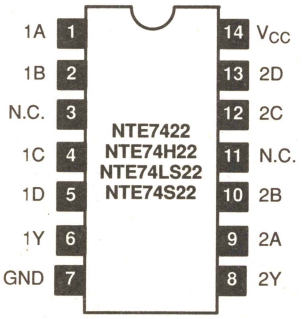

Expandable Dual 4–Input NOR Gate w/Strobe — 16–Lead DIP, See Diag. 247

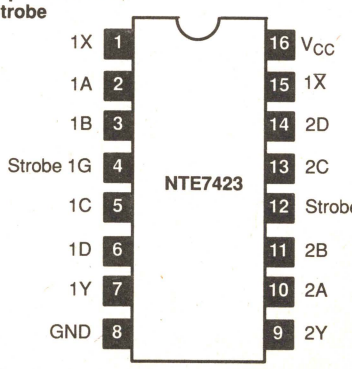

See Diagrams, beginning on Page 1–320

(TRANSISTOR TRANSISTOR LOGIC)

Dual 4–Input Pos NOR Gate w/Strobe — 14–Lead DIP, See Diag. 247

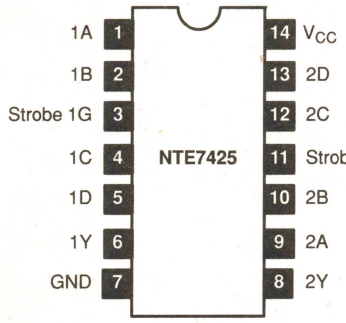

Quad 2–Input High Vltg Interface NAND Gate — 14–Lead DIP, See Diag. 247

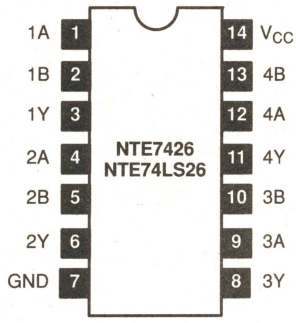

Triple 3–Input Pos NOR Gate — 14–Lead DIP, See Diag. 247

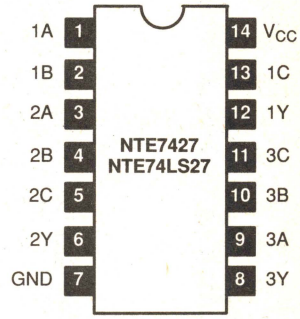

Quad 2–Input Pos NOR Buffer/Clock Driver w/Totem Pole Outputs — 14–Lead DIP, See Diag. 247

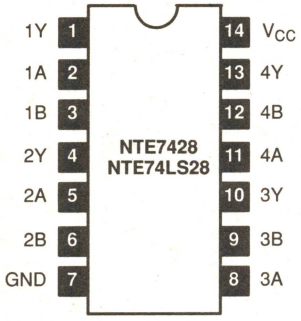

8–Input Pos NAND Gate — 14–Lead DIP, See Diag. 247

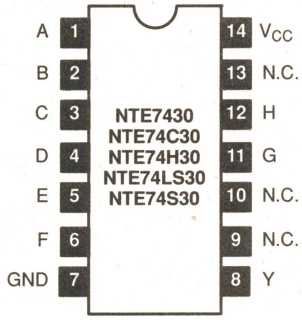

Quad 2–Input OR Gate — 14–Lead DIP, See Diag. 247

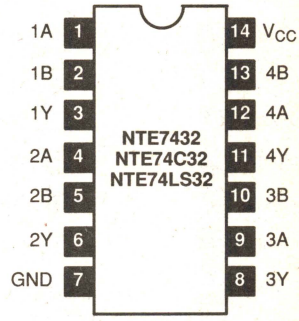

Quad 2–Input NOR Buffer w/Open Collector Outputs — 14–Lead DIP, See Diag. 247

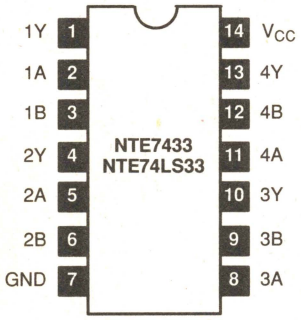

Quad 2–Input NAND Buffer — 14–Lead DIP, See Diag. 247

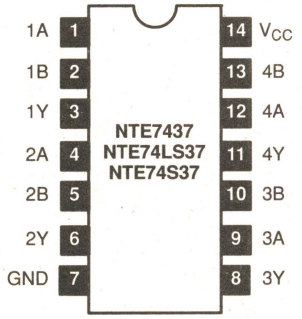

Quad 2–Input NAND Buffer w/Open Collector Outputs — 14–Lead DIP, See Diag. 247

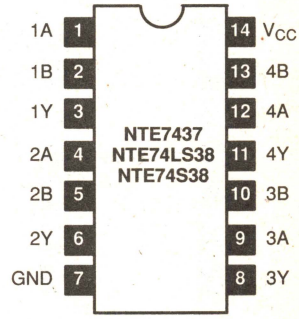

Quad 2–Input NAND Buffer w/Open Collector Outputs — 14–Lead DIP, See Diag. 247

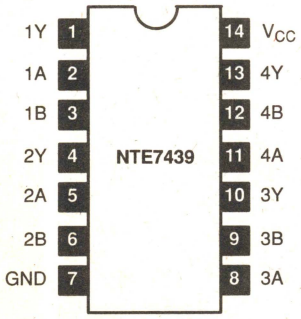

Dual 4–Input NAND Buffer — 14–Lead DIP, See Diag. 247

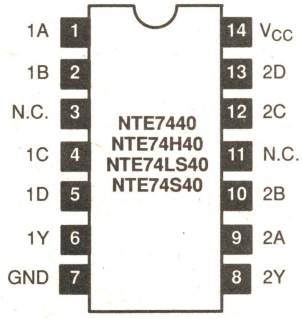

1–of–10 Decoder Driver for Cold Cathode Indicator Tubes — 16–Lead DIP, See Diag. 247

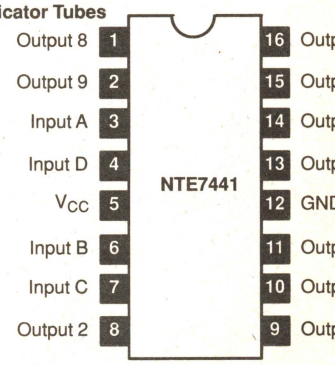

See Diagrams, beginning on Page 1–320

(TRANSISTOR TRANSISTOR LOGIC)

4–Line–to–10–Line BCD–to–Decimal Decoder — 16–Lead DIP, See Diag. 249

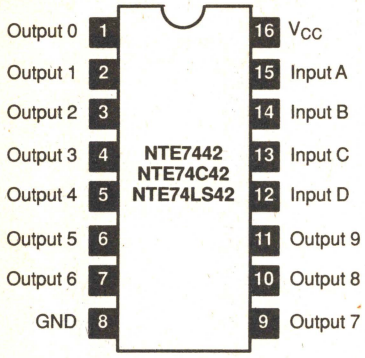

4–Line–to–10–Line Excess 3–to–Decimal Decoder — 16–Lead DIP, See Diag. 247

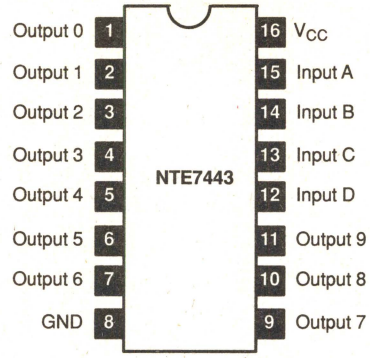

4–Line–to–10–Line Excess 3–Gray–to–Decimal Decoder — 16–Lead DIP, See Diag. 247

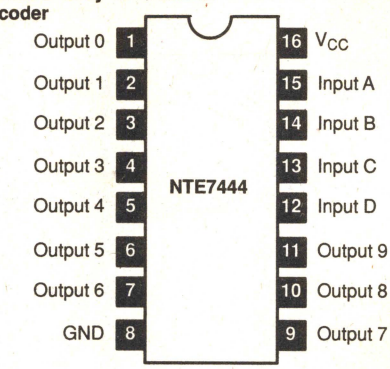

BCD–to–Decimal Decoder/Driver — 16–Lead DIP, See Diag. 247

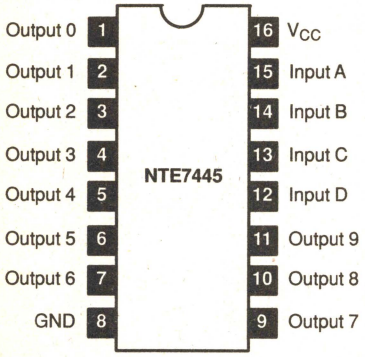

BCD–to–Seven– Segment Decoder/Driver w/Active Low Open Collector Outputs — 16–Lead DIP, See Diag. 247

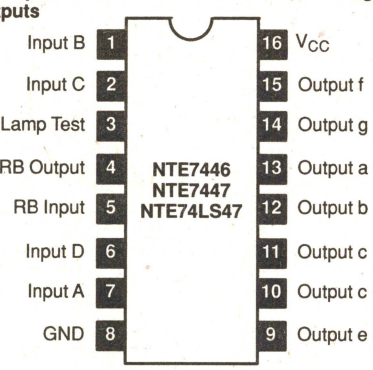

BCD–to–Seven–Segment Decoder/Driver w/Internal Pull–Up Outputs — 16–Lead DIP, See Diag. 247

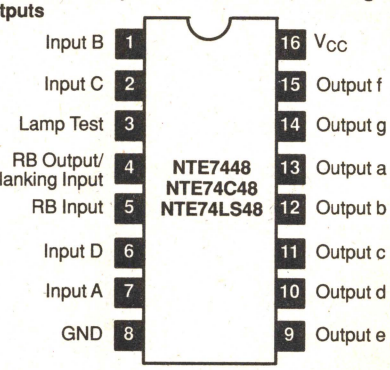

BCD–to–Seven–Segment Decoder/Driver w/Open Collector Outputs — 14–Lead DIP, See Diag. 247

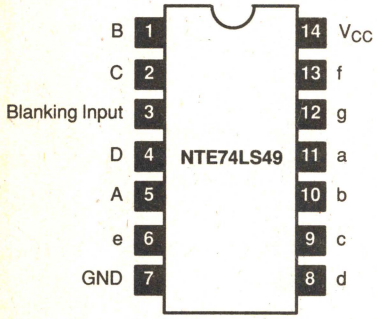

Dual 2–Wide 2–Input AND/OR Invert Gate (One Gate Expandable) — 14–Lead DIP, See Diag. 247

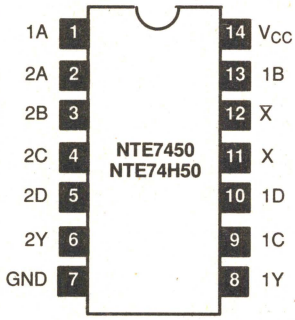

Dual 2–Wide 2–Input AND/OR Invert Gate — 14–Lead DIP, See Diag. 247

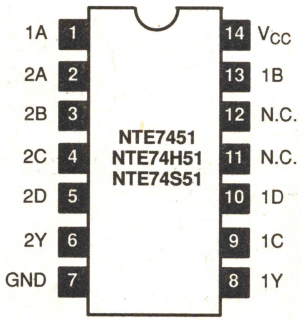

Dual 2–Wide 2–Input AND/OR Invert Gate — 14–Lead DIP, See Diag. 247

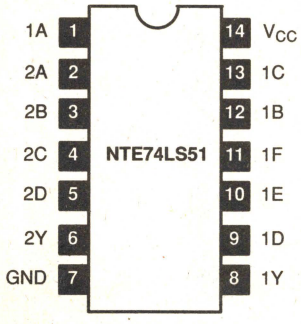

Expandable 4–Wide AND/OR Gate — 14–Lead DIP, See Diag. 247

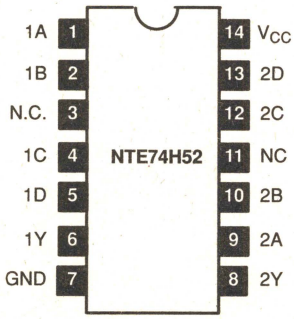

Expandable AND/OR Invert Gate — 14–Lead DIP, See Diag. 247

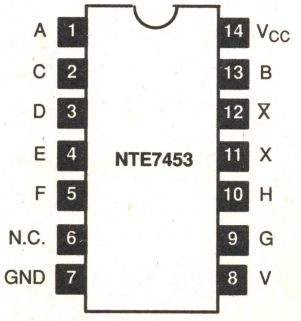

See Diagrams, beginning on Page 1–320

(TRANSISTOR TRANSISTOR LOGIC)

Expandable AND/OR Invert Gate — 14–Lead DIP, See Diag. 247

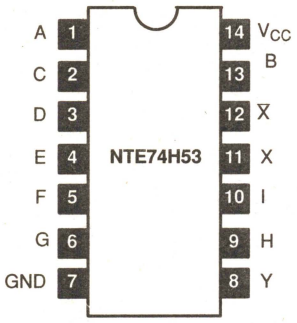

4–Wide AND/OR Invert Gate — 14–Lead DIP, See Diag. 247

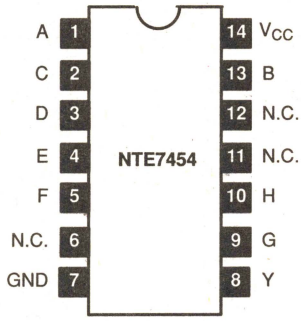

4–Wide AND/OR Invert Gate — 14–Lead DIP, See Diag. 247

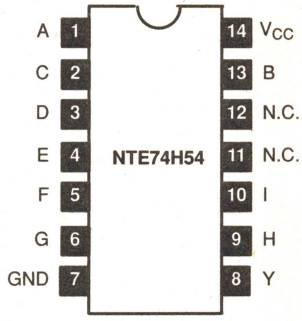

4–Wide AND/OR Invert Gate — 14–Lead DIP, See Diag. 247

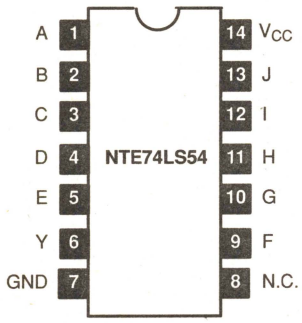

Expandable 2–Wide 4–Input AND/OR Invert Gate — 14–Lead DIP, See Diag. 247

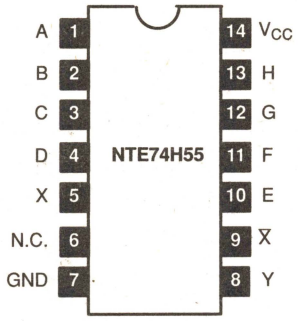

2–Wide 4–Input AND/OR Invert Gate — 14–Lead DIP, See Diag. 247

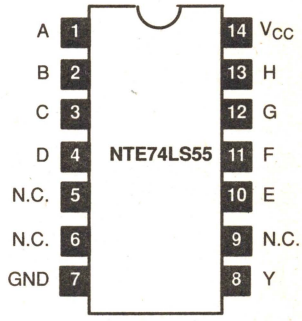

Dual 4–Input Expander — 14–Lead DIP, See Diag. 247

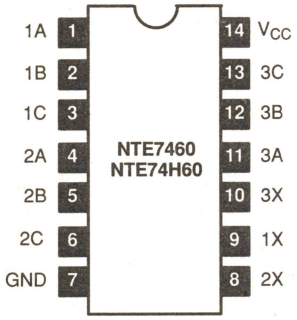

Triple 3–Input Expander — 14–Lead DIP, See Diag. 247

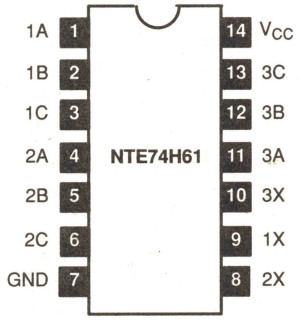

4–Wide AND/OR Expander — 14–Lead DIP, See Diag. 247

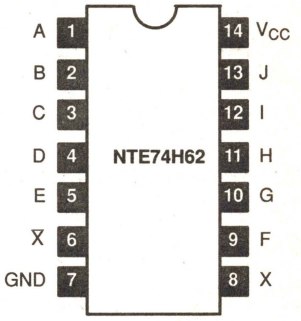

Hex Current–Sensing Interface Gate — 14–Lead DIP, See Diag. 247

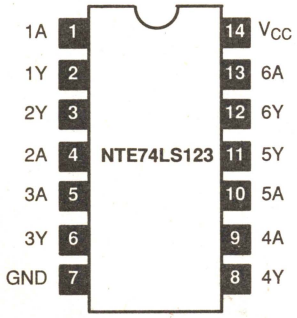

4–2–3–2 Input AND/OR Invert Gate — 14–Lead DIP, See Diag. 247

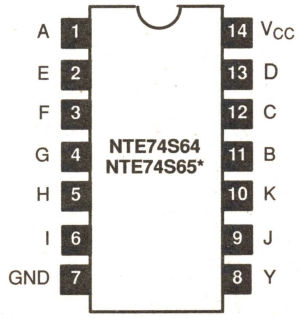

*With Open Collector Outputs

AND Gated J–K Pos Edge Triggered Flip–Flop w/Preset and Clear — 14–Lead DIP, See Diag. 247

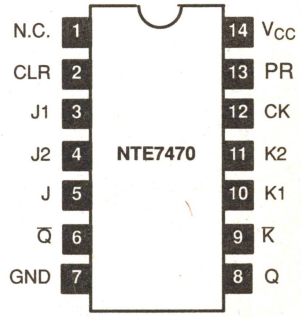

See Diagrams, beginning on Page 1–320

(TRANSISTOR TRANSISTOR LOGIC)

AND Gated J–K M/S Flip–Flop w/Preset and Clear — 14–Lead DIP, See Diag. 247

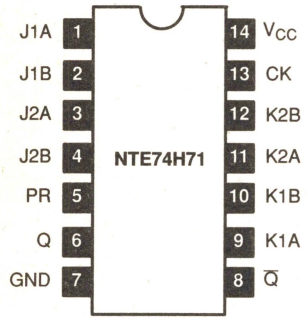

AND Gated J–K M/S Flip–Flop w/Preset and Clear — 14–Lead DIP, See Diag. 247

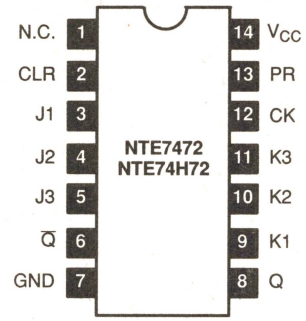

Dual J–K Flip–Flop w/Clear — 14–Lead DIP, See Diag. 247

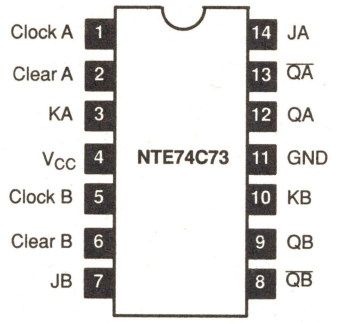

Dual J–K Flip–Flop w/Clear — 14–Lead DIP, See Diag. 247

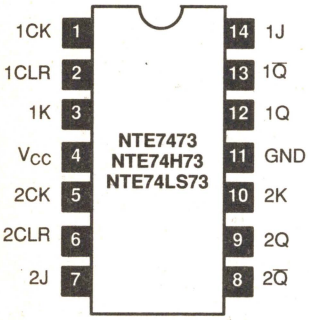

Dual D–Type Pos Edge Triggered Flip–Flop w/Preset and Clear — 14–Lead DIP, See Diag. 247

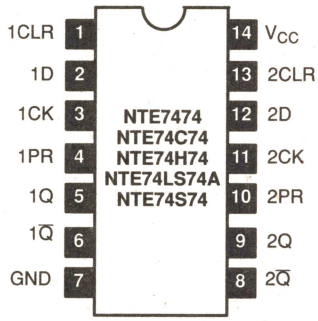

4–Bit Bistable Latch — 16–Lead DIP, See Diag. 249

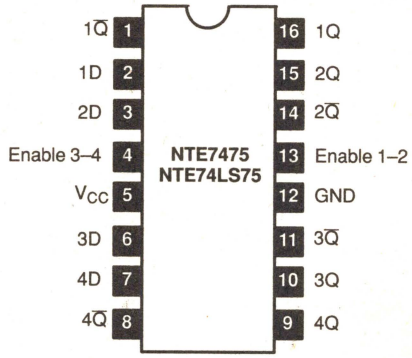

Dual J–K Flip–Flop w/Preset and Clear — 16–Lead DIP, See Diag. 249

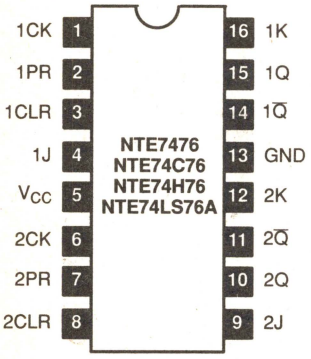

4–Bit D Latch — 14–Lead DIP, See Diag. 247

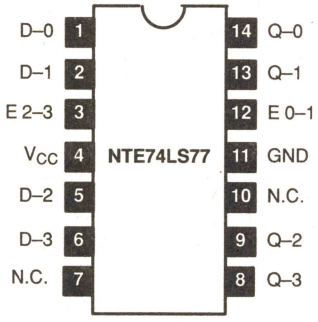

Dual J–K Flip–Flop w/Preset, Common Clear and Common Clock — 14–Lead DIP, See Diag. 247

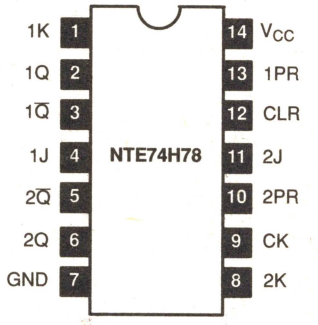

Dual J–K Flip–Flop w/Preset, Common Clear and Common Clock — 14–Lead DIP, See Diag. 247

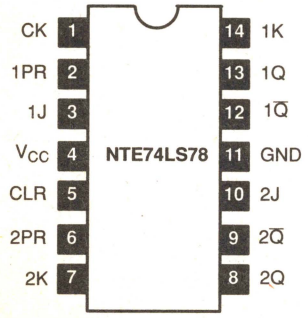

Gated Full Adder — 14–Lead DIP, See Diag. 247

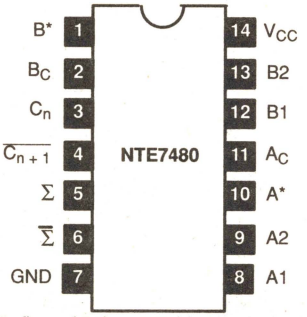

*This configuration is nonstable, that is, it will not persist when preset and clear inputs return to their inactive (High) level.

2–Bit Binary Full Adder — 14–Lead DIP, See Diag. 247

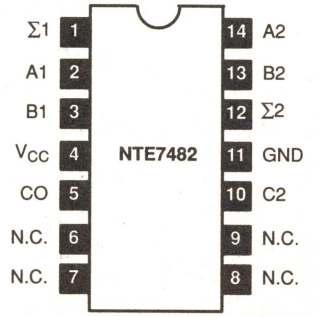

See Diagrams, beginning on Page 1–320

(TRANSISTOR TRANSISTOR LOGIC)

4–Bit Binary Full Adder w/Fast Carry — 16–Lead DIP, See Diag. 249

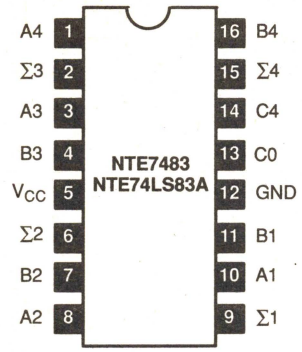

4–Bit Magnitude Comparator — 16–Lead DIP, See Diag. 249

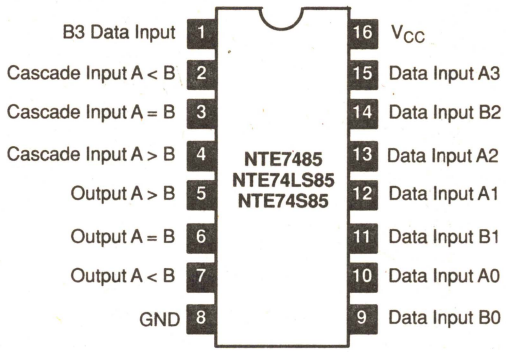

4–Bit Magnitude Comparator — 16–Lead DIP, See Diag. 249

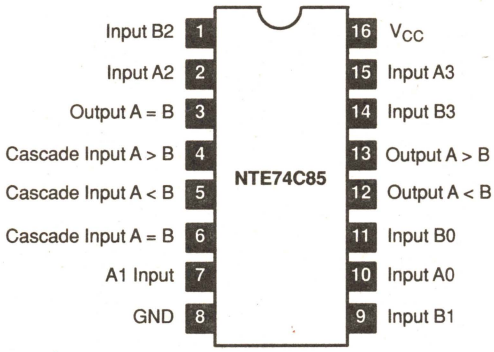

Quad 2–Input Exclusive or Gate — 14–Lead DIP, See Diag. 247

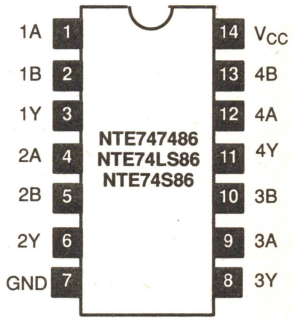

4–Bit True/Complement– Zero/One Element — 14–Lead DIP, See Diag. 247

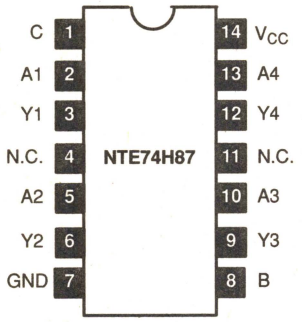

64 Bit Read/ Write Memory — 16–Lead DIP, See Diag. 249

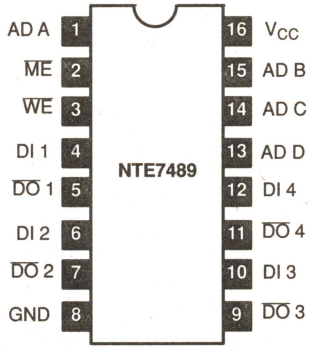

Decade Counter Divide By 2 & 5 — 14–Lead DIP, See Diag. 247

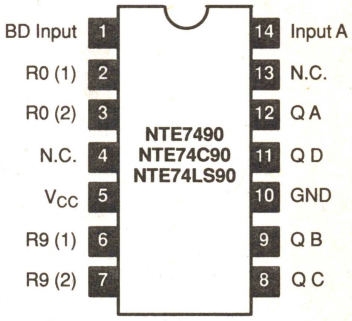

8–Bit Shift Register w/Gated Serial Inputs and Serial Outputs — 14–Lead DIP, See Diag. 247

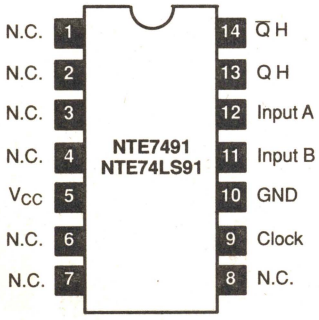

Divide–by–Twelve Counter — 14–Lead DIP, See Diag. 247

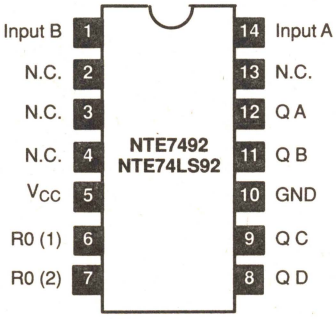

4–Bit Binary Counter Divide by 2 & 8 — 14–Lead DIP, See Diag. 247

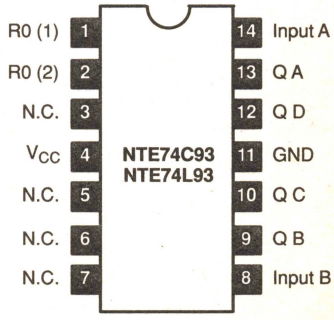

See Diagrams, beginning on Page 1–320

(TRANSISTOR TRANSISTOR LOGIC)

4–Bit Binary Counter Divide by 2 & 8 — 14–Lead DIP, See Diag. 247

NTE7493A / NTE74LS93

Input B	1	14	Input A
R0 (1)	2	13	N.C.
R0 (2)	3	12	Q A
N.C.	4	11	Q D
V_{CC}	5	10	GND
N.C.	6	9	Q B
N.C.	7	8	Q C

4–Bit Shift Register Dual Async Presets — 16–Lead DIP, See Diag. 249

NTE7494

P1 A	1	16	P2 A
P1 B	2	15	PE 2
P1 C	3	14	P2 B
P1 D	4	13	P2 C
V_{CC}	5	12	GND
PE 1	6	11	P2 D
Serial In	7	10	Clear
Clock	8	9	Output

4–Bit Parallel In/ Parallel Out Shift Register — 14–Lead DIP, See Diag. 247

NTE7495

Serial Input	1	14	V_{CC}
Input A	2	13	Q A
Input B	3	12	Q B
Input C	4	11	Q C
Input D	5	10	Q D
Mode Control	6	9	Clock 1 R–Shift
GND	7	8	Clock 2 L–Shift (Load)

4–Bit Parallel In/ Parallel Out Shift Register — 14–Lead DIP, See Diag. 247

NTE74C95

Serial Input	1	14	Input A
Input B	2	13	Output A
Input C	3	12	Output B
V_{CC}	4	11	GND
Input D	5	10	Output C
Mode Control	6	9	Output D
Clock 1 R–Shift	7	8	Clock 2 L–Shift

4–Bit Shift Register — 14–Lead DIP, See Diag. 247

NTE74LS95B

D S	1	14	V_{CC}
P0	2	13	Q0
P1	3	12	Q1
P2	4	11	Q2
P3	5	10	Q3
S	6	9	$\overline{CP}$ 1
GND	7	8	$\overline{CP}$ 2

5–Bit Shift Register w/Async Preset — 16–Lead DIP, See Diag. 249

NTE7496

Clock	1	16	Clear
Preset A	2	15	Output QA
Preset B	3	14	Output QB
Preset C	4	13	Output QC
V_{CC}	5	12	GND
Preset D	6	11	Output QD
Preset E	7	10	Output QE
Preset Enable	8	9	Serial Input

Synchronous 6–Bit Binary Rate Multiplier — 16–Lead DIP, See Diag. 249

NTE7497

B	1	16	V_{CC}
E	2	15	D
F	3	14	C
A	4	13	Clear
Z	5	12	Unity/Cascade
Enable Y	6	11	Enable Input
Output	7	10	Strobe
GND	8	9	Clock

8–Bit Bistable Latch — 24–Lead DIP, See Diag. 252

NTE74100

N.C.	1	24	V_{CC}
1D 1	2	23	Enable 1G
1D 2	3	22	1D 3
1Q 2	4	21	1D 4
1Q 1	5	20	1Q 4
N.C.	6	19	1Q 3
GND	7	18	2Q 3
2Q 1	8	17	2Q 4
2Q 2	9	16	2D 4
2D 2	10	15	2D 3
2D 1	11	14	N.C.
Enable 2G	12	13	N.C.

AND/OR Gate J–K Neg Edge Triggered Flip–Flop w/Preset — 14–Lead DIP, See Diag. 247

NTE74H101

J1 A	1	14	V_{CC}
J1 B	2	13	CK
J2 A	3	12	K2 B
J2 B	4	11	K2 A
PR	5	10	K1 B
Q	6	9	K1 A
GND	7	8	$\overline{Q}$

AND Gated J–K Neg Edge Triggered Flip–Flop w/Clear and Preset — 14–Lead DIP, See Diag. 247

NTE74H102

N.C.	1	14	V_{CC}
CLR	2	13	PR
J1	3	12	CK
J2	4	11	K3
J3	5	10	K2
$\overline{Q}$	6	9	K1
GND	7	8	Q

Dual J–K Neg Edge Triggered Flip–Flop w/Clears — 14–Lead DIP, See Diag. 247

NTE74H103

1 CK	1	14	1 J
1 CLR	2	13	1 $\overline{Q}$
1 K	3	12	1 Q
V_{CC}	4	11	GND
2 CK	5	10	2 K
2 CLR	6	9	2 Q
2 J	7	8	2 $\overline{Q}$

See Diagrams, beginning on Page 1–320

(TRANSISTOR TRANSISTOR LOGIC)

Gated J–K Master–Slave Flip–Flop — 14–Lead DIP, See Diag. 249

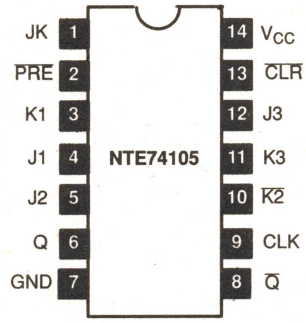

Dual J–K Neg Edge Triggered Flip–Flop w/Clear — 14–Lead DIP, See Diag. 247

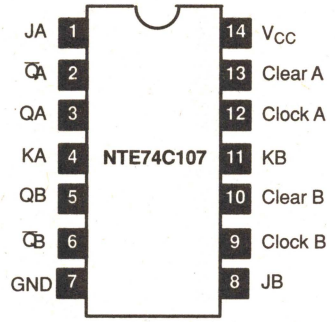

Dual J–K Flip–Flop w/Clear — 14–Lead DIP, See Diag. 247

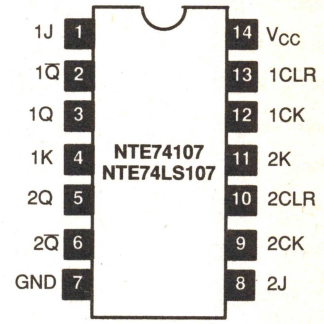

Dual J–K Neg Edge Triggered Flip–Flop w/Presets, Common Clear and Common Clock — 14–Lead DIP, See Diag. 247

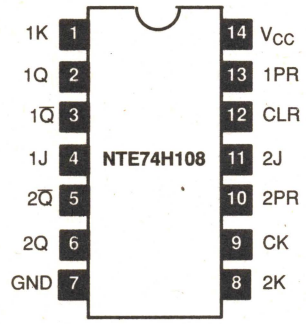

Dual J–K Pos Edge Triggered Flip–Flop w/Clear and Preset — 16–Lead DIP, See Diag. 249

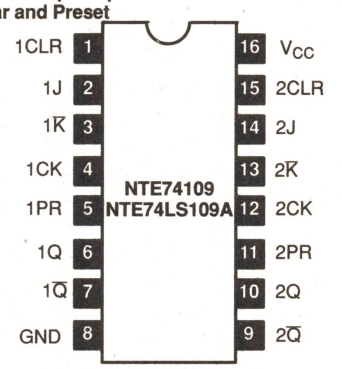

AND Gated J–K M/S Flip–Flop w/Data Lockout — 14–Lead DIP, See Diag. 247

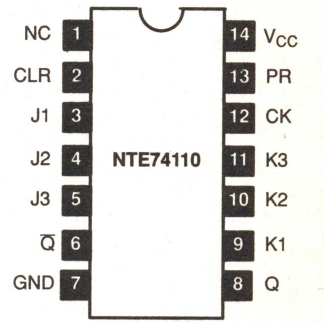

Dual J–K Flip–Flop M/S w/Data Lockout — 16–Lead DIP, See Diag. 249

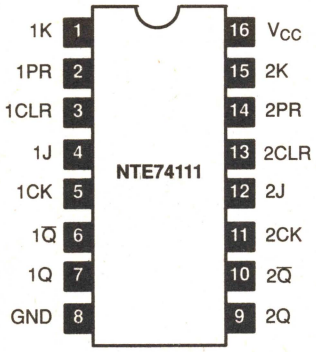

Dual J–K Neg Edge Triggered Flip–Flop w/Preset & Clear — 16–Lead DIP, See Diag. 249

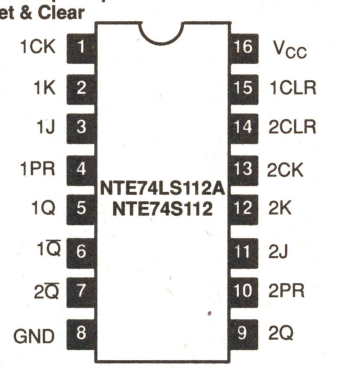

Dual 4–Bit Latch — 24–Lead DIP, See Diag. 252

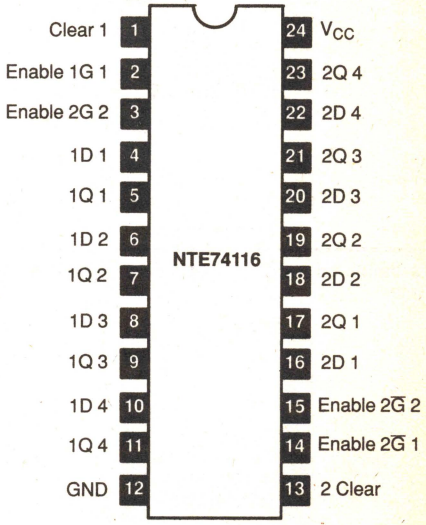

Dual J–K Neg Edge Triggered Flip–Flop w/Preset — 14–Lead DIP, See Diag. 247

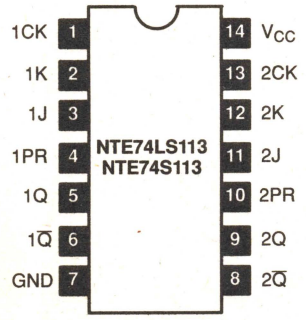

Dual J–K Neg Edge Triggered Flip–Flop w/Preset, Common Clock and Clear — 14–Lead DIP, See Diag. 247

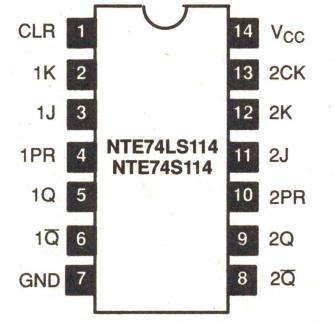

See Diagrams, beginning on Page 1–320

(TRANSISTOR TRANSISTOR LOGIC)

Dual Pulse Synchronizer/Divider — 16–Lead DIP, See Diag. 249

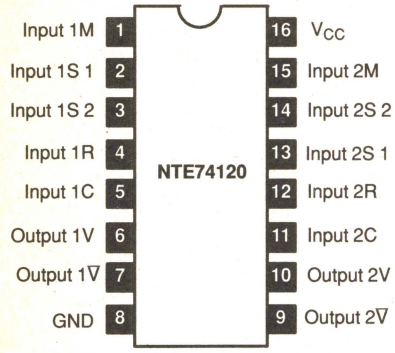

Monostable Multivibrators — 14–Lead DIP, See Diag. 247

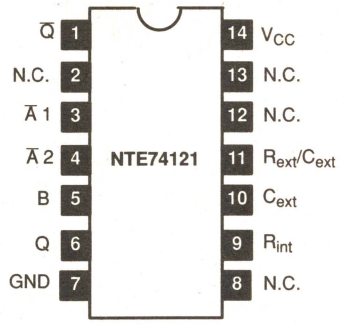

Retriggerable Monostable Multivibrator w/Clear — 14–Lead DIP, See Diag. 247

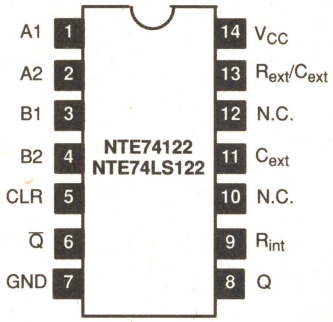

Dual Retriggerable Monostable Multivibrators w/Clear — 16–Lead DIP, See Diag. 249

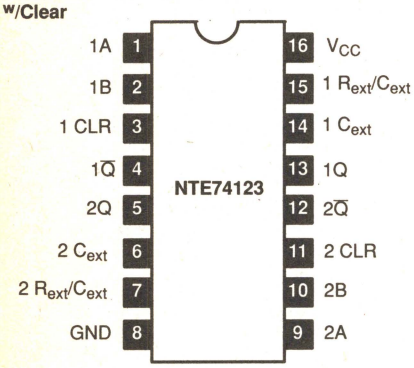

Dual Vltg Controlled Osc — 16–Lead DIP, See Diag. 249

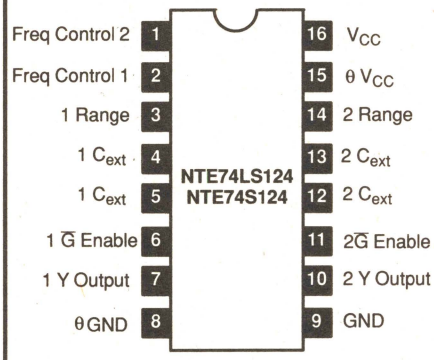

Quad Bus Buffer w/3–State Outputs — 14–Lead DIP, See Diag. 247

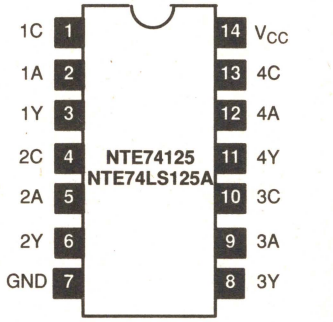

Quad Bus Buffer w/3–State Outputs — 14–Lead DIP, See Diag. 247

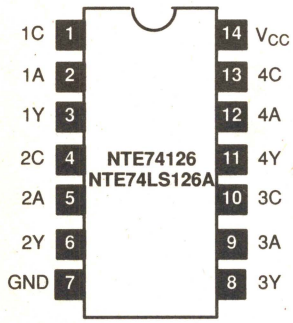

Quad 2–Input NOR 50 Ohm Line Driver — 14–Lead DIP, See Diag. 247

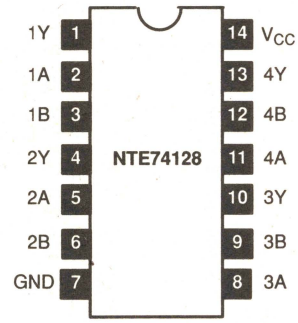

Quad 2–Input Pos NAND Schmitt Trigger — 14–Lead DIP, See Diag. 247

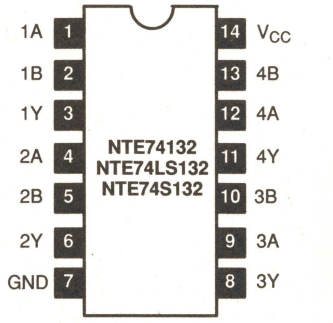

13–Input Pos NAND Gate — 16–Lead DIP, See Diag. 249

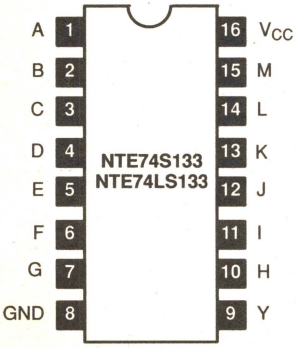

12–Input Pos NAND Gate w/3–State Outputs — 16–Lead DIP, See Diag. 249

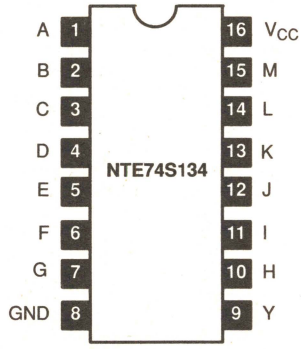

Quad Exclusive–OR–Gate w/Open Collector Outputs — 14–Lead DIP, See Diag. 247

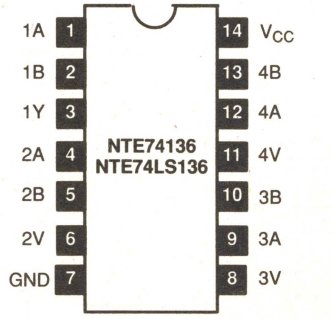

See Diagrams, beginning on Page 1–320

(TRANSISTOR TRANSISTOR LOGIC)

3–of–8 Decoder/ Demultiplexer — 16–Lead DIP, See Diag. 249

NTE74LS138 / NTE74S138

Select A	1	16	V_{CC}
Select B	2	15	Data Output Y0
Select C	3	14	Data Output Y1
Enable G2 A	4	13	Data Output Y2
Enable G2 B	5	12	Data Output Y3
Enable G1	6	11	Data Output Y4
Output Y7	7	10	Data Output Y5
GND	8	9	Data Output Y6

Dual 2–to–4 Line Decoder/Demultiplexer — 16–Lead DIP, See Diag. 249

NTE74LS139

1G Enable	1	16	V_{CC}
Select 1A	2	15	Enable 2G
Select 1B	3	14	Select 2A
1Y0	4	13	Select 2B
1Y1	5	12	Data Output 2Y0
1Y2	6	11	Data Output 2Y1
1Y3	7	10	Data Output 2Y2
GND	8	9	Data Output 2Y3

Dual 4–Input Pos NAND 50 Ohm Line Driver — 14–Lead DIP, See Diag. 247

NTE74S140

1A	1	14	V_{CC}
1B	2	13	2D
N.C.	3	12	2C
1C	4	11	N.C.
1D	5	10	2B
1Y	6	9	2A
GND	7	8	2Y

BCD–to–Decimal Decoder/Driver, Driver Gas Filled Cold Cathode Indicator Tubes Directly — 16–Lead DIP, See Diag. 249

NTE74141

Output 8	1	16	Output 0
Output 9	2	15	Output 1
Input A	3	14	Output 5
Input D	4	13	Output 4
V_{CC}	5	12	GND
Input B	6	11	Output 6
Input C	7	10	Output 7
2 Output	8	9	Output 3

BCD–to–Decimal Decoder/Driver for Lamps, Relays, MOS — 16–Lead DIP, See Diag. 249

NTE74145 / NTE74LS145

Output 0	1	16	V_{CC}
Output 1	2	15	Input A
Output 2	3	14	Input B
Output 3	4	13	Input C
Output 4	5	12	Input D
Output 5	6	11	Output 9
Output 6	7	10	Output 8
GND	8	9	Output 7

10–Line Decimal–to–4–Line BCD Priority Encoder — 16–Lead DIP, See Diag. 249

NTE74147 / NTE74LS147

Input 4	1	16	V_{CC}
Input 5	2	15	N.C.
Input 6	3	14	Output D
Input 7	4	13	Input 3
Input 8	5	12	Input 2
Output C	6	11	Input 1
Output B	7	10	Input 9
GND	8	9	Output A

8–Line–to3–Line Octal, Priority Encoder — 16–Lead DIP, See Diag. 249

NTE74148 / NTE74LS148

Input 4	1	16	V_{CC}
Input 5	2	15	Output EO
Input 6	3	14	Output GS
Input 7	4	13	Input 3
Input E1	5	12	Input 2
Output A2	6	11	Input 1
Output A1	7	10	Input 0
GND	8	9	Output A0

1–of–16 Data Selector/ Multiplexer — 24–Lead DIP, See Diag. 252

NTE74150

Data Input 7	1	24	V_{CC}
Data Input 6	2	23	Data Input 8
Data Input 5	3	22	Data Input 9
Data Input 4	4	21	Data Input 10
Data Input 3	5	20	Data Input 11
Data Input 2	6	19	Data Input 12
Data Input 1	7	18	Data Input 13
Data Input 0	8	17	Data Input 14
Strobe	9	16	Data Input 15
Output W	10	15	Data Select A
Data Select D	11	14	Data Select B
GND	12	13	Data Select C

1–of–8 Data Selector/ Multiplexer — 16–Lead DIP, See Diag. 249

NTE74C151

Data Input 3	1	16	V_{CC}
Data Input 2	2	15	Data Input 4
Data Input 1	3	14	Data Input 5
Data Input 0	4	13	Data Input 6
Output Y	5	12	Data Input 7
Output W	6	11	Data Select A
Strobe	7	10	Data Select B
GND	8	9	Data Select C

1–of–8 Data Selector/ Multiplexer — 16–Lead DIP, See Diag. 249

NTE74151 / NTE74LS151 / NTE74S151

Data Input 3	1	16	V_{CC}
Data Input 2	2	15	Data Input 4
Data Input 1	3	14	Data Input 5
Data Input 0	4	13	Data Input 6
Output Y	5	12	Data Input 7
Output W	6	11	Data Select A
Strobe	7	10	Data Select B
GND	8	9	Data Select C

1–of–8 Data Selector/ Multiplexer — 14–Lead DIP, See Diag. 247

NTE74152

Data Input 4	1	14	V_{CC}
Data Input 3	2	13	Data Input 5
Data Input 2	3	12	Data Input 6
Data Input 1	4	11	Data Input 7
Data Input 0	5	10	Data Select A
Output W	6	9	Data Select B
GND	7	8	Data Select C

See Diagrams, beginning on Page 1–320

(TRANSISTOR TRANSISTOR LOGIC)

Dual 4–Line–to–1–Line Data Selector/Multiplexer — 16–Lead DIP, See Diag. 249

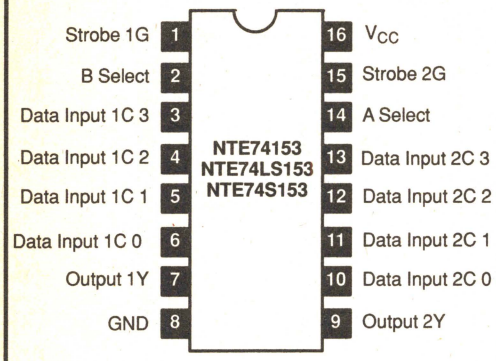

4–Line–to–16–Line Decoder/Demultiplexer — 24–Lead DIP, See Diag. 252

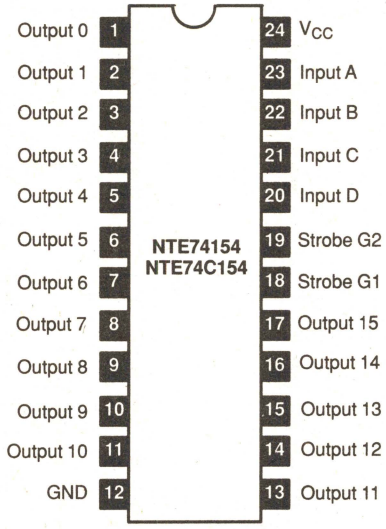

Dual 2–Line–to–4–Line Decoder/Demultiplexer w/Totem Pole Outputs — 16–Lead DIP, See Diag. 249

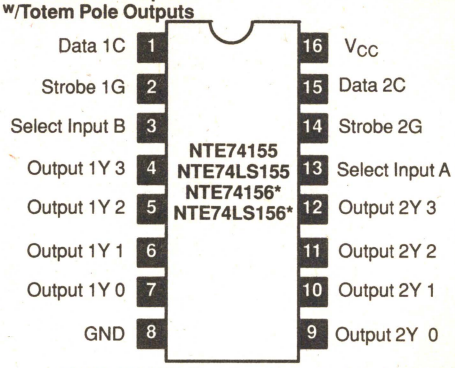

*74156, 74LS156 Have Open Collector Outputs

Quad 2–to–1–Line Data Selector/Multiplexer w/Non–Inverted Data Outputs — 16–Lead DIP, See Diag. 249

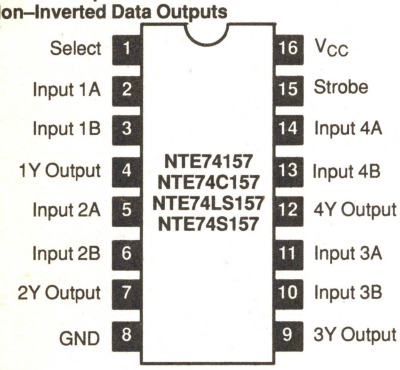

Quad 2–to–1–Line Data Selector/Multiplexer w/Inverted Data Outputs — 16–Lead DIP, See Diag. 249

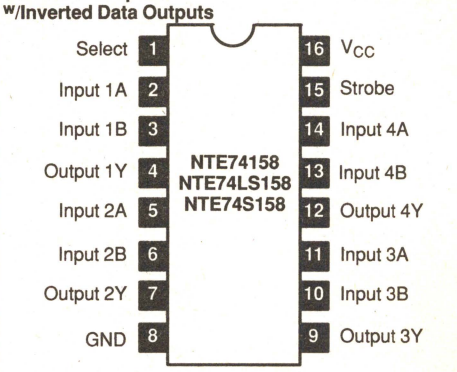

Synchronous 4–Bit Counter — 16–Lead DIP, See Diag. 249

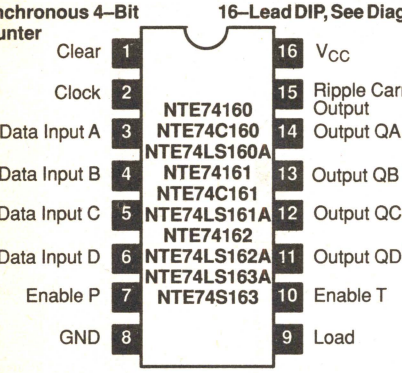

160–Decade, Direct Clear
161–Binary, Direct Clear
162–Binary, Synchronous
163–Binary, Synchronous Clear

8–Bit Parallel–Out Serial Shift Register w/Async Clear — 16–Lead DIP, See Diag. 249

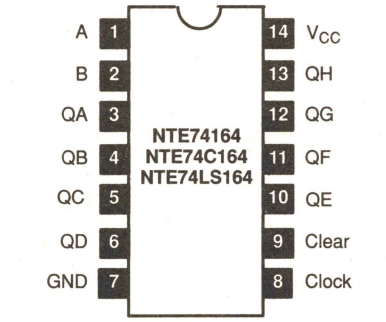

Parallel–Load 8–Bit Shift Register w/Complementary Outputs — 16–Lead DIP, See Diag. 249

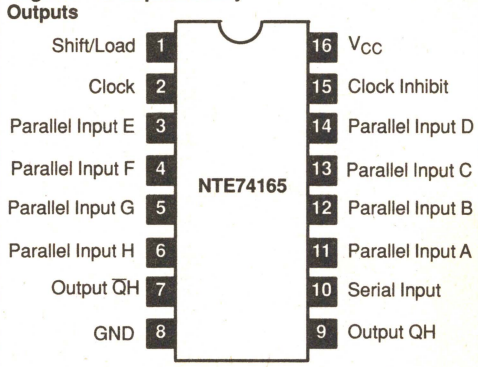

8–Bit Parallel–to–Serial Converter — 16–Lead DIP, See Diag. 249

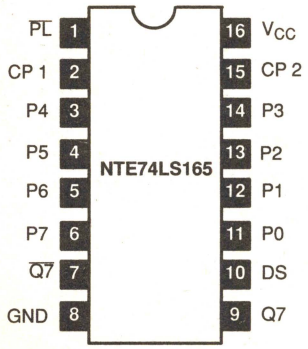

8–Bit Parallel or Serial In–Serial Out Shift Register — 16–Lead DIP, See Diag. 249

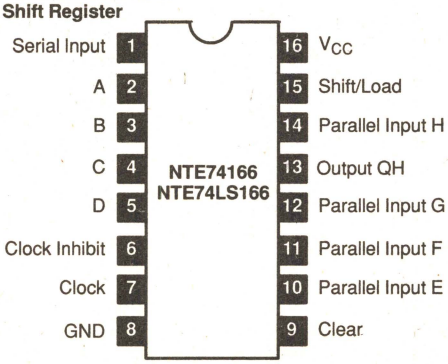

Synchronous Presettable BCD Decade Up/Down Counter — 16–Lead DIP, See Diag. 249

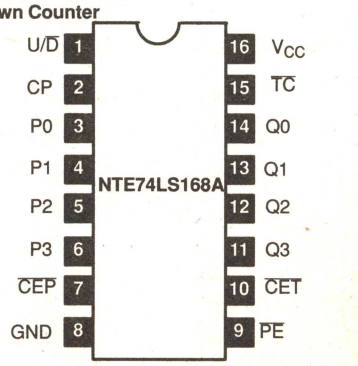

See Diagrams, beginning on Page 1–320

(TRANSISTOR TRANSISTOR LOGIC)

Synchronous Presettable Modulo 16 Counter — 16–Lead DIP, See Diag. 249

NTE74LS169A

U/D	1	16	V_{CC}
CP	2	15	$\overline{TC}$
P0	3	14	Q0
P1	4	13	Q1
P2	5	12	Q2
P3	6	11	Q3
$\overline{CEP}$	7	10	$\overline{CET}$
GND	8	9	$\overline{PE}$

4–by–4–Register File, Open Collector Output — 16–Lead DIP, See Diag. 249

NTE74170 NTE74LS170

Data D2	1	16	V_{CC}
Data D3	2	15	Data D1
Data D4	3	14	WA
Read Select RB	4	13	WB
Read Select RA	5	12	Write Enable
Output Q4	6	11	Read Enable
Output Q3	7	10	Output Q1
GND	8	9	Output Q2

4–Bit D–Type Flip–Flop w/3–State Outputs — 16–Lead DIP, See Diag. 249

NTE74173 NTE74LS173A

Output Control M	1	16	V_{CC}
Output Control N	2	15	Clear
Output 1Q	3	14	Data Input 1D
Output 2Q	4	13	Data Input 2D
Output 3Q	5	12	Data Input 3D
Output 4Q	6	11	Data Input 4D
Clock	7	10	Data Enable Input G2
GND	8	9	Data Enable Input G1

4–Bit D–Type Flip–Flop w/3–State Outputs — 16–Lead DIP, See Diag. 249

NTE74C173

Output Disable	1	16	V_{CC}
Output Disable	2	15	Clear
Output A	3	14	Input A
Output B	4	13	Input B
Output C	5	12	Input C
Output D	6	11	Input D
CP	7	10	Data Input Disable
GND	8	9	Data Input Disable

Hex D–Type Flip–Flop w/Serial Rail Outputs and Common Direct Clear — 16–Lead DIP, See Diag. 249

NTE74174 NTE74C174 NTE74LS174 NTE74S174

Clear	1	16	V_{CC}
1Q	2	15	6Q
1D	3	14	6D
2D	4	13	5D
2Q	5	12	5Q
3D	6	11	4D
3Q	7	10	4Q
GND	8	9	Clock

Quad D–Type Flip–Flop w/Common Direct Clear and Complementary Outputs — 16–Lead DIP, See Diag. 249

NTE74175 NTE74C175 NTE74LS175 NTE74S175

Clear	1	16	V_{CC}
1Q	2	15	4Q
$1\overline{Q}$	3	14	$4\overline{Q}$
1D	4	13	4D
2D	5	12	3D
$2\overline{Q}$	6	11	$3\overline{Q}$
2Q	7	10	3Q
GND	8	9	Clock

Presettable Counter/Latch — 16–Lead DIP, See Diag. 249

NTE74176 (Decade) NTE74177 (Binary)

Count/Load	1	14	V_{CC}
QC	2	13	Clear
Data Input C	3	12	QD
Data Input A	4	11	Data Input D
QA	5	10	Data Input B
Clock 2	6	9	QB
GND	7	8	Clock 1

Universal Shift Register — 16–Lead DIP, See Diag. 249

NTE74178

B	1	14	V_{CC}
A	2	13	Input C
Serial In	3	12	Input D
QA Output	4	11	Shift
Clock	5	10	Output QD
QB Input	6	9	Load
GND	7	8	Output QC

Arithmetic Logic Unit/Function Generator — 16–Lead DIP, See Diag. 249

NTE74181 NTE74S181 NTE74LS181

Input $\overline{B}0$	1	24	V_{CC}
Input $\overline{A}0$	2	23	Input $\overline{A}1$
Input S3	3	22	Input $\overline{B}1$
Input S2	4	21	Input $\overline{A}2$
Input S1	5	20	Input $\overline{B}2$
Input S0	6	19	Input $\overline{A}3$
Input C_n	7	18	Input $\overline{B}3$
M	8	17	Output $\overline{G}$
Output $\overline{F}0$	9	16	Output C_{n+4}
Output $\overline{F}1$	10	15	Output $\overline{P}$
Output $\overline{F}2$	11	14	Output A = B
GND	12	13	Output $\overline{F}3$

4–Bit Universal Shift Register w/Direct Clear — 16–Lead DIP, See Diag. 249

NTE74179

Clear	1	16	V_{CC}
Input B	2	15	Input C
Input A	3	14	Input D
Serial In	4	13	Shift
QA Output	5	12	Output $\overline{Q}D$
Clock	6	11	Output QD
QB Output	7	10	Load
GND	8	9	Output QC

9–Bit Odd/Even Parity Generator/Checker — 14–Lead DIP, See Diag. 247

NTE74180

G	1	14	V_{CC}
H	2	13	Input F
Even Input	3	12	Input E
Odd Input	4	11	Input D
Σ Even Output	5	10	Input C
Σ Odd Output	6	9	Input B
GND	7	8	Input A

See Diagrams, beginning on Page 1–320

(TRANSISTOR TRANSISTOR LOGIC)

Look–Ahead Carry Generator — 16–Lead DIP, See Diag. 249

NTE74182 / NTE74S182

Input $\overline{G1}$	1	16	V_{CC}
Input $\overline{P1}$	2	15	Input $\overline{P2}$
Input $\overline{G0}$	3	14	Input $\overline{G2}$
Input $\overline{P0}$	4	13	Input C_n
Input $\overline{G3}$	5	12	Output C_{n+x}
Input $\overline{P3}$	6	11	Output C_{n+y}
Output $\overline{P}$	7	10	Output $\overline{G}$
GND	8	9	C_{n+z}

Dual Carry/Save Full Adder — 14–Lead DIP, See Diag. 247

NTE74H183

Input 1A	1	14	V_{CC}
N.C.	2	13	Input 2A
Input 1B	3	12	Input 2B
Input 1 C_n	4	11	Input 2 C_n
Output 1 C_{n+1}	5	10	Output 2 C_{n+1}
Output 1Σ	6	9	N.C.
GND	7	8	Output 2Σ

Binary–to–BCD Code Converter — 16–Lead DIP, See Diag. 249

NTE74185

Output Y1	1	16	V_{CC}
Output Y2	2	15	Enable G
Output Y3	3	14	Binary Select E
Output Y4	4	13	Binary Select D
Output Y5	5	12	Binary Select C
Output Y6	6	11	Binary Select B
Output Y7	7	10	Binary Select A
GND	8	9	Output Y8

256–Bit (32 x 8) TTL PROM — 16–Lead DIP, See Diag. 249

NTE74S188

Q1	1	16	V_{CC}
Q2	2	15	$\overline{E1}$
Q3	3	14	A4
Q4	4	13	A3
Q5	5	12	A2
Q6	6	11	A1
Q7	7	10	A0
GND	8	9	Q8

64–Bit RAM w/3–State Outputs — 16–Lead DIP, See Diag. 249

NTE74S189

A0	1	16	V_{CC}
$\overline{CS}$	2	15	A1
$\overline{WE}$	3	14	A2
D1	4	13	A3
$\overline{O1}$	5	12	D4
D2	6	11	$\overline{O4}$
$\overline{O2}$	7	10	D3
GND	8	9	$\overline{O3}$

Synchronous Up/Down Counter — 16–Lead DIP, See Diag. 249

NTE74190 / NTE74LS190 (BCD) / NTE74191 / NTE74LS191 (Binary)

Input Data B	1	16	V_{CC}
Output QB	2	15	Input Data A
Output QA	3	14	Input Clock
Input Enable G	4	13	Input Ripple Clock
Input Down/Up	5	12	Output Max/Min
Output QC	6	11	Input Load
Output QD	7	10	Input Data C
GND	8	9	Input Data D

Synchronous Up/Down Dual Clock Counter — 16–Lead DIP, See Diag. 249

NTE74192 / NTE74C192 / NTE74LS192 (BCD w/Clear) / NTE74193 / NTE74C193 / NTE74LS193 (Binary w/Clear)

Input Data A	1	16	V_{CC}
Output QB	2	15	Input Data A
Output QA	3	14	Input Clear
Input Count Down	4	13	Output Borrow
Input Count Up	5	12	Output Carry
Output QC	6	11	Input Load
Output QD	7	10	Input Data C
GND	8	9	Input Data D

4–Bit Bi–Directional Universal Shift Register — 16–Lead DIP, See Diag. 249

NTE74LS194 / NTE74LS194A / NTE74S194

$\overline{MR}$	1	16	V_{CC}
D_{SR}	2	15	O0
P0	3	14	O1
P1	4	13	O2
P2	5	12	O3
P3	6	11	CP
D_{SL}	7	10	S1
GND	8	9	S0

8–Bit Bi–Directional Universal Shift Register — 24–Lead DIP, See Diag. 252

NTE74198

S0	1	24	V_{CC}
Shift Right Serial Input	2	23	S1
Input A	3	22	Shift Left Serial Input
QA	4	21	Input H
Input B	5	20	QH
QB	6	19	Input G
Input C	7	18	QG
QC	8	17	Input F
Input D	9	16	QF
QD	10	15	Input E
Clock	11	14	QE
GND	12	13	Clear

4–Bit Parallel Access Shift Register — 16–Lead DIP, See Diag. 249

NTE74195 / NTE74LS195A

Clear	1	16	V_{CC}
Serial Input J	2	15	Output QA
Serial Input $\overline{K}$	3	14	Output QB
Parallel Output A	4	13	Output QC
Parallel Output B	5	12	Output QD
Parallel Output C	6	11	Output $\overline{QD}$
Parallel Output D	7	10	Clock
GND	8	9	Shift/Load

Presettable Counter/Latch — 14–Lead DIP, See Diag. 247

NTE74196 / NTE74LS196 (Decade) / NTE74197 / NTE74LS197 (Modulo–16 Binary)

Count/Load	1	14	V_{CC}
QC	2	13	Clear
C	3	12	QD
A	4	11	Data Input D
QA	5	10	Data Input B
Clock 2	6	9	QB
GND	7	8	Clock 1

See Diagrams, beginning on Page 1–320

INTEGRATED CIRCUITS – TTL

(TRANSISTOR TRANSISTOR LOGIC)

8–Bit Bi–Directional Universal Shift Register — 16–Lead DIP, See Diag 249

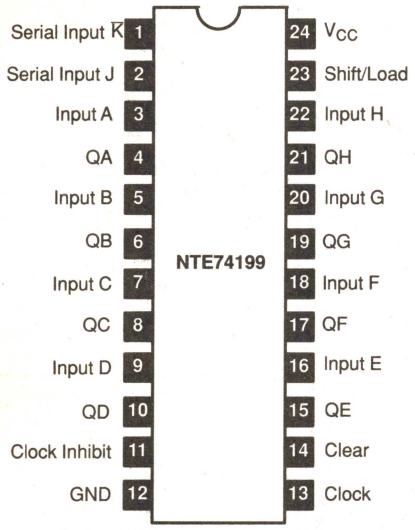

Dual Monostable Multivibrator — 16–Lead DIP, See Diag 249

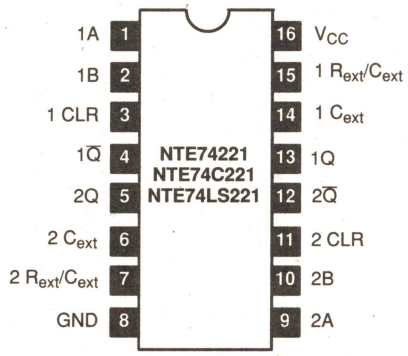

Octal Buffer/Line Driver/Receiver w/3–State Inverted Outputs — 20–Lead DIP, See Diag 294

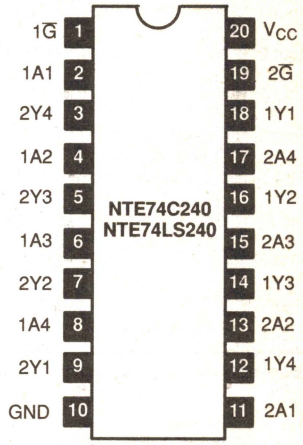

Octal Buffer/Line Driver/Receiver w/3–State Non–Inverted Outputs — 20–Lead DIP, See Diag 294

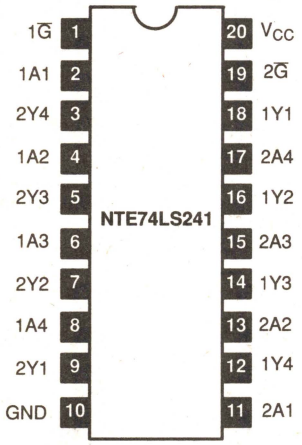

Quad Bus Transceiver w/3–State Outputs — 14–Lead DIP, See Diag 247

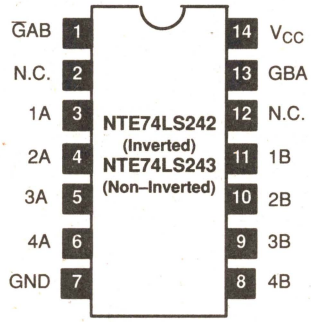

Octal Buffer/Line Driver/Receiver w/3–State Non–Inverted Outputs — 20–Lead DIP, See Diag 294

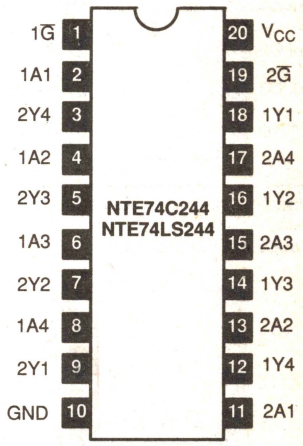

Octal Bus Transceiver w/3–State Non–Inverted Outputs — 20–Lead DIP, See Diag 294

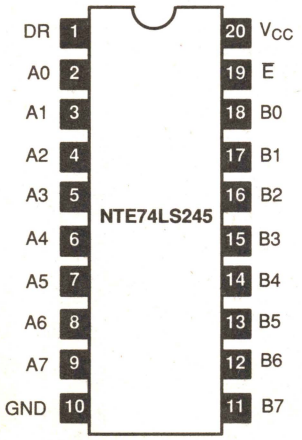

BCD–to–Seven–Segment Decoder/Driver w/3–State Non–Inverted Outputs — 16–Lead DIP, See Diag 249

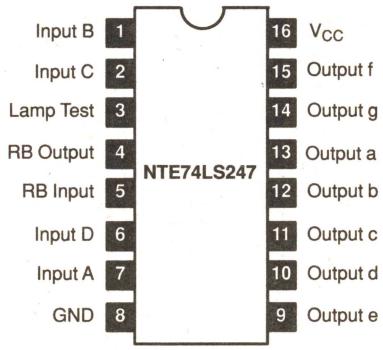

BCD–to–Seven–Segment Decoder/Driver — 16–Lead DIP, See Diag 249

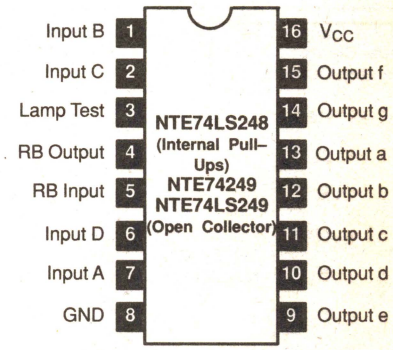

See Diagrams, beginning on Page 1–320

(TRANSISTOR TRANSISTOR LOGIC)

Data Selector/ Multiplexer w/True and Inverted 3–State Outputs — 16–Lead DIP, See Diag 249

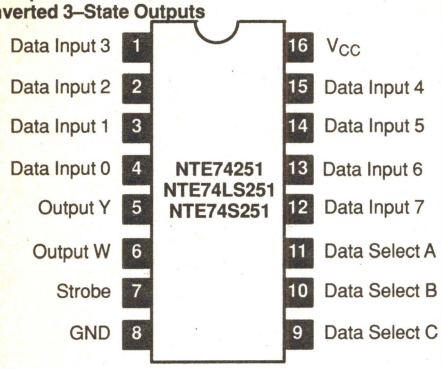

Dual Data Selector/ Multiplexer w/3–State Outputs — 16–Lead DIP, See Diag 249

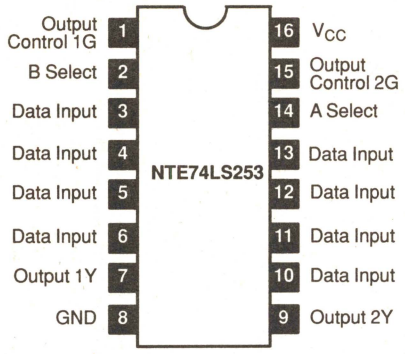

Quad Data Selector/ Multiplexer w/3–State Outputs — 16–Lead DIP, See Diag 249

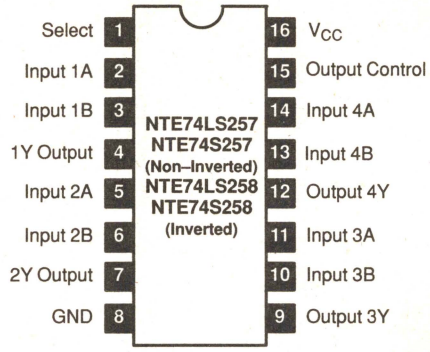

8–Bit Addressable Latch — 16–Lead DIP, See Diag 249

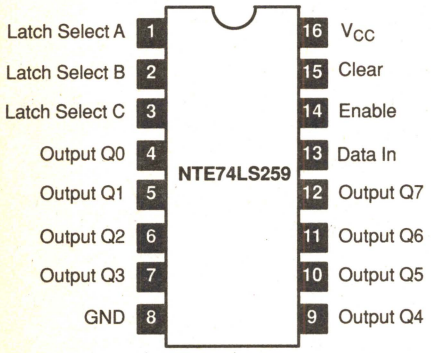

Dual 5–Input NOR Gate — 14–Lead DIP, See Diag 247

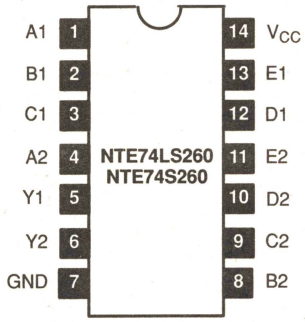

Quad Complementary– Output Elements — 16–Lead DIP, See Diag 249

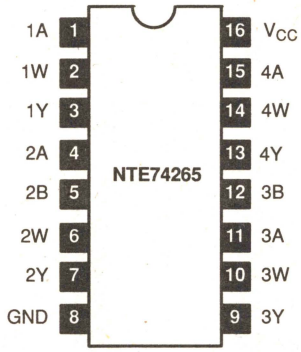

Quad 2–Input Exclusive NOR Gate w/Open Collector Outputs — 14–Lead DIP, See Diag 247

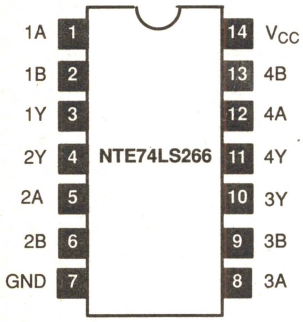

Octal D–Type Flip–Flop w/Common Clock and Single Rail Outputs — 20–Lead DIP, See Diag 294

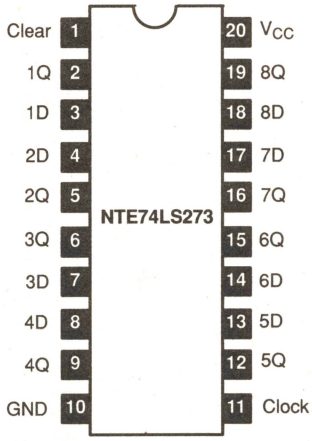

4–Bit Cascadable Priority Register w/Latched Data Inputs and Priority Output Gating — 14–Lead DIP, See Diag 247

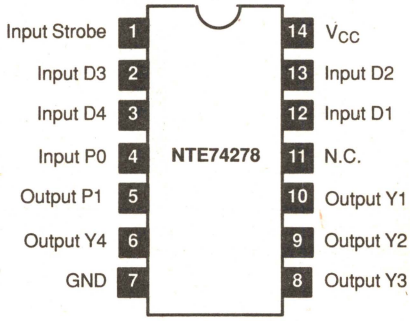

Quad Set–Reset Latch w/Diode–Clamped Inputs and Totem Pole Outputs — 16–Lead DIP, See Diag 249

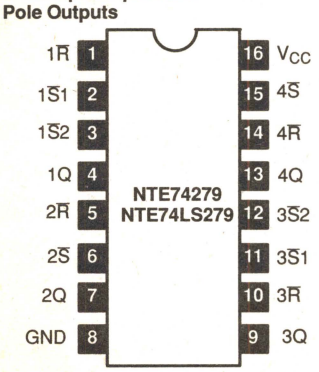

9–Bit Odd/Even Parity Generator/Checker (N–Bit Cascadable) — 14–Lead DIP, See Diag 247

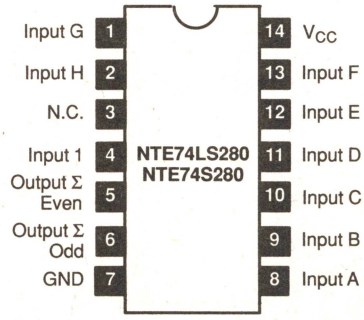

See Diagrams, beginning on Page 1–320

INTEGRATED CIRCUITS – TTL

(TRANSISTOR TRANSISTOR LOGIC)

4–Bit Binary Full Adder — 16–Lead DIP, See Diag 249

NTE74LS283

Σ2	1	16	V_{CC}
B2	2	15	B2
A2	3	14	A3
Σ1	4	13	Σ3
A1	5	12	A4
B1	6	11	B4
C0	7	10	Σ4
GND	8	9	C4

Bi–Polar 1024–Bit TTL PROM, 50ns Max Address Access — 16–Lead DIP, See Diag 249

NTE74S287

A6	1	16	V_{CC}
A5	2	15	A7
A4	3	14	$\overline{E2}$
A3	4	13	$\overline{E1}$
A0	5	12	Q1
A1	6	11	Q2
A2	7	10	Q3
GND	8	9	Q4

256–Bit (32 x 8) Tri–State PROM — 16–Lead DIP, See Diag 249

NTE74S288

Q1	1	16	V_{CC}
Q2	2	15	$\overline{E1}$
Q3	3	14	A4
Q4	4	13	A3
Q5	5	12	A2
Q6	6	11	A1
Q7	7	10	A0
GND	8	9	Q8

Decade Counter (Divide by 2 & 5) — 14–Lead DIP, See Diag 247

NTE74LS290

R9 (1)	1	14	V_{CC}
N.C.	2	13	R0 (2)
R9 (2)	3	12	R0 (1)
QC Output	4	11	Input B
QB Output	5	10	Input A
N.C.	6	9	Output QA
GND	7	8	Output QD

4–Bit Binary Counter (Divide by 2 & 8) — 14–Lead DIP, See Diag 247

NTE74LS293

N.C.	1	14	V_{CC}
N.C.	2	13	R0(2)
N.C.	3	12	R0(1)
Output QC	4	11	Input B
Output QB	5	10	Input A
N.C.	6	9	Output QA
GND	7	8	Output QD

4–Bit Bi–Directional Universal Shift Register — 14–Lead DIP, See Diag 247

NTE74LS295 NTE74LS295A

DS	1	14	V_{CC}
P0	2	13	Q0
P1	3	12	Q1
P2	4	11	Q2
P3	5	10	Q3
PE	6	9	$\overline{CP}$
GND	7	8	E0

Quad 2–Input Multiplexer w/Storage — 16–Lead DIP, See Diag 249

NTE74298 NTE74LS298

B2	1	16	V_{CC}
A2	2	15	QA
A1	3	14	QB
B1	4	13	QC
C2	5	12	QD
D2	6	11	Clock
D1	7	10	Word Select
GND	8	9	Data Input C1

8–Bit Shift/Storage Register w/3–State Outputs — 20–Lead DIP, See Diag 294

NTE74LS299

S0	1	20	V_{CC}
$\overline{OE1}$	2	19	S1
$\overline{OE2}$	3	18	DS 7
I/O6	4	17	Q7
I/O4	5	16	I/O7
I/O2	6	15	I/O5
I/O0	7	14	I/O3
Q0	8	13	I/O1
$\overline{MR}$	9	12	CP
GND	10	11	DS0

Voltage–Controlled Oscillator — 14–Lead DIP, See Diag 247

NTE74LS324

OSC GND	1	14	OSC V_{CC}
RNG	2	13	Freq Control
CX 1	3	12	N.C.
CX 2	4	11	N.C.
$\overline{EN}$	5	10	N.C.
Y	6	9	V_{CC}
GND	7	8	Z

Voltage–Controlled Oscillator — 14–Lead DIP, See Diag 247

NTE74LS327

1 OSC V_{CC}	1	14	V_{CC}
1FC	2	13	2 OSC V_{CC}
1CX1	3	12	2FC
1CX2	4	11	2CX 1
1 OSC GND	5	10	2CX 2
1Y	6	9	2 OSC GND
GND	7	8	2Y

8–Line–to–3–Line Priority Encoder — 16–Lead DIP, See Diag 249

NTE74LS348

Input 4	1	16	V_{CC}
Input 5	2	15	Output E0
Input 6	3	14	Output GS
Input 7	4	13	Input 3
Input E1	5	12	Input 2
Output A2	6	11	Input 1
Output A1	7	10	Input 0
GND	8	9	Output A0

Dual 4–Line–to–1–Line Data Selector/Multiplexer (Inverting Version of NTE74LS153) — 16–Lead DIP, See Diag 249

NTE74LS352

Strobe 1G	1	16	V_{CC}
B Select	2	15	Strobe 2G
Data Input 1C3	3	14	A Select
Data Input 1C2	4	13	Data Input 2C3
Data Input 1C1	5	12	Data Input 2C2
Data Input 1C0	6	11	Data Input 2C1
Output 1Y	7	10	Data Input 2C0
GND	8	9	Output 2Y

See Diagrams, beginning on Page 1–320

(TRANSISTOR TRANSISTOR LOGIC)

Dual 4–Line–to–1–Line Data Selector/Multiplexer — 16–Lead DIP, See Diag 249

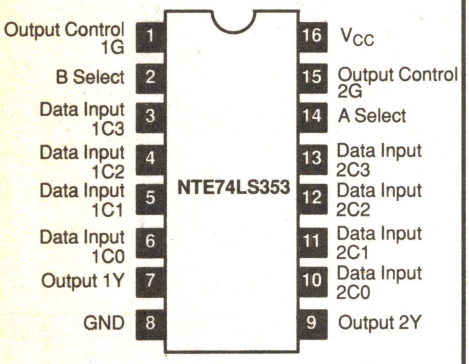

Octal Transparent Latch w/3–State Outputs — 20–Lead DIP, See Diag 294

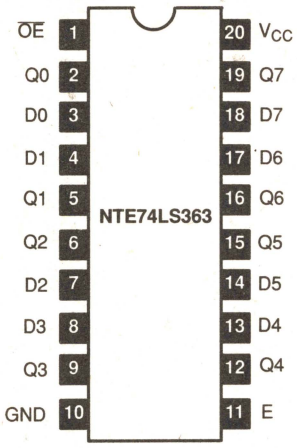

Octal "D" Flip–Flop w/3–State Outputs — 20–Lead DIP, See Diag 294

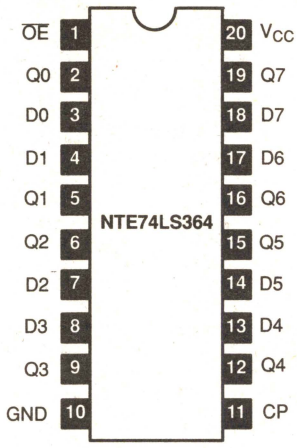

3–State Hex Buffer/Driver — 16–Lead DIP, See Diag 249

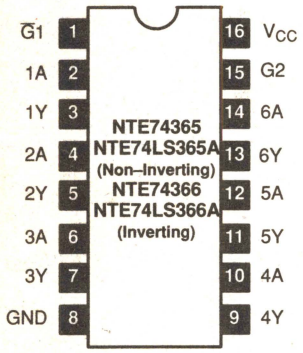

Hex Buffer/Driver w/3–State Outputs Organized to Handle 4–Bit Data — 16–Lead DIP, See Diag 249

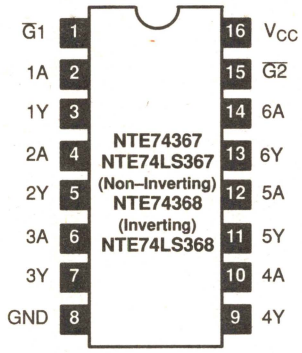

Octal D–Type Latch w/3–State Outputs and Common Output Control — 20–Lead DIP, See Diag 294

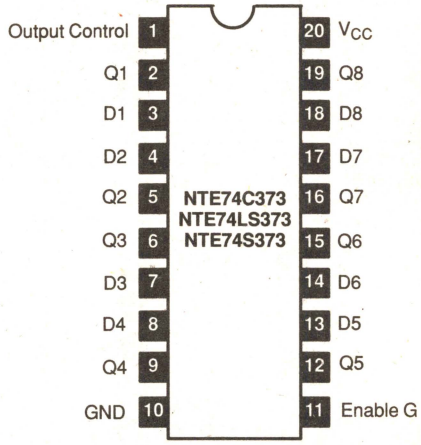

Octal D–Type Flip–Flop w/3–State Outputs, Common Output Control and Common Clock — 20–Lead DIP, See Diag 294

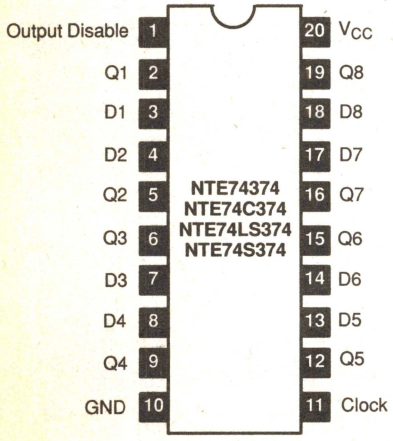

Quadruple J–K Flip–Flop — 16–Lead DIP, See Diag 249

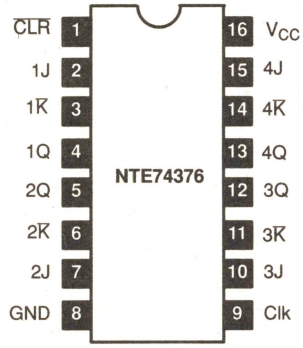

Octal D–Type Flip–Flop w/Common Enable w/Clock and Single Rail Outputs — 20–Lead DIP, See Diag 294

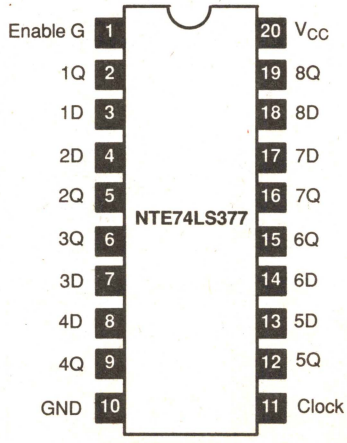

See Diagrams, beginning on Page 1–320

(TRANSISTOR TRANSISTOR LOGIC)

Hex "D" Flip–Flop w/Clock Enable — 16–Lead DIP, See Diag. 249

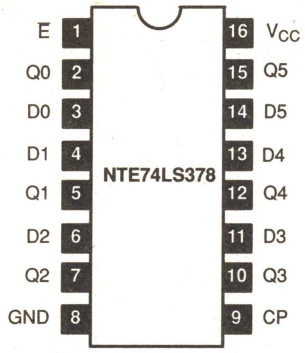

Quad "D" Flip–Flop — 16–Lead DIP, See Diag. 249

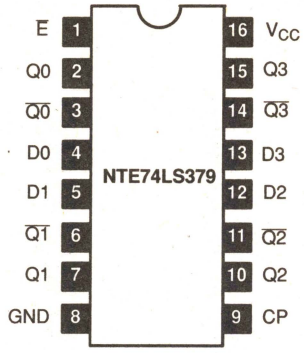

Quad 2–Input Exclusive OR Gate — 14–Lead DIP, See Diag. 247

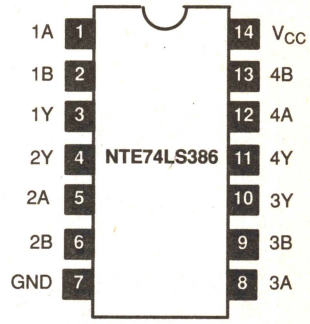

1024–Bit (256 x 4) Open Collector PROM 50ns Max Address Access — 16–Lead DIP, See Diag. 249

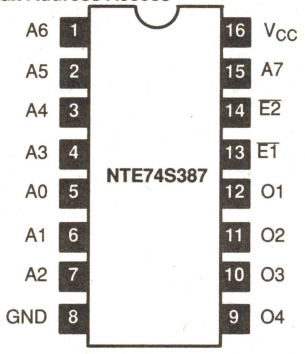

Dual Decade Ripple Counter — 16–Lead DIP, See Diag. 249

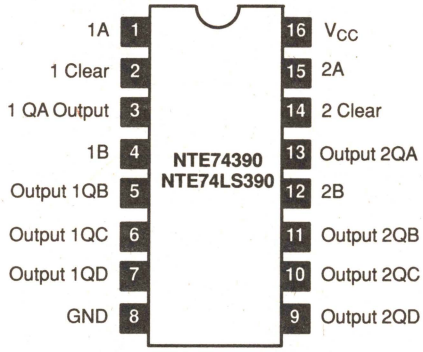

Dual 4–Bit Binary Ripple Counter — 14–Lead DIP, See Diag. 247

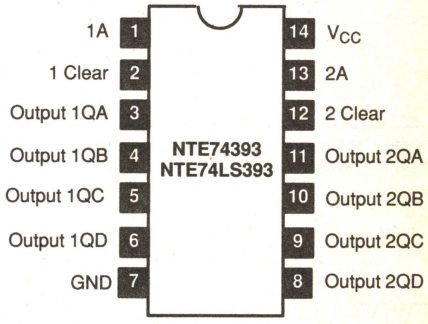

4–Bit Cascadable Shift Register w/3–State Outputs — 16–Lead DIP, See Diag. 249

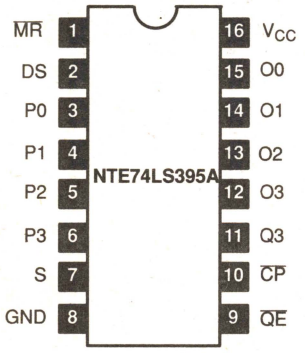

Octal Storage Register w/Parallel Access — 16–Lead DIP, See Diag. 249

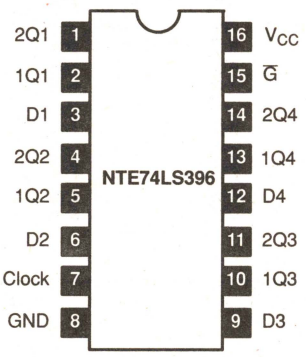

Quad 2–Port Register — 20–Lead DIP, See Diag. 294

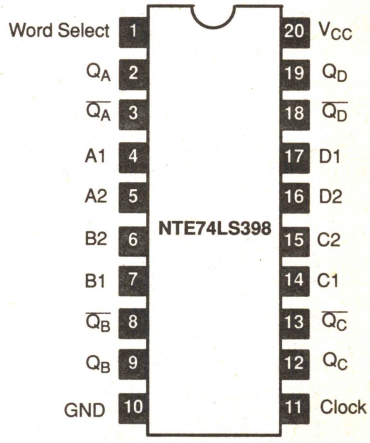

Quad 2–Port Register — 16–Lead DIP, See Diag. 249

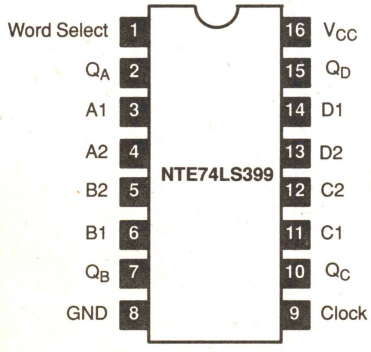

Quad Gate w/3–State Outputs and Active–High–Enabling — 14–Lead DIP, See Diag. 247

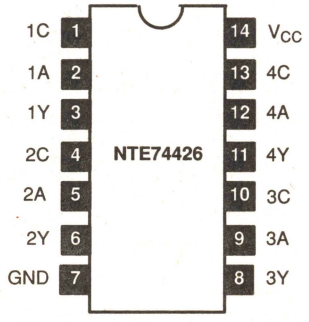

See Diagrams, beginning on Page 1–320

(TRANSISTOR TRANSISTOR LOGIC)

BCD–to–Decimal Decoder/Driver w/Open Collector Outputs — 16–Lead DIP, See Diag 249

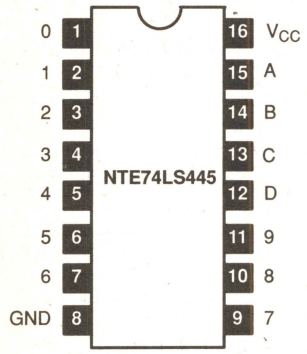

4096–Bit (512 x 8) Tri–State PROM — 20–Lead DIP, See Diag 294

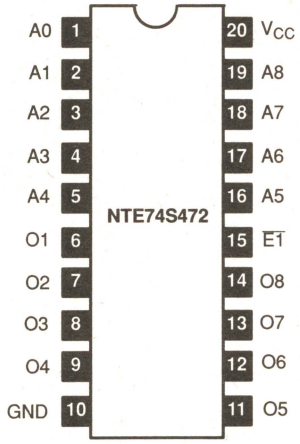

4096–Bit (512 x 8) TTL PROM — 24–Lead DIP, See Diag 252

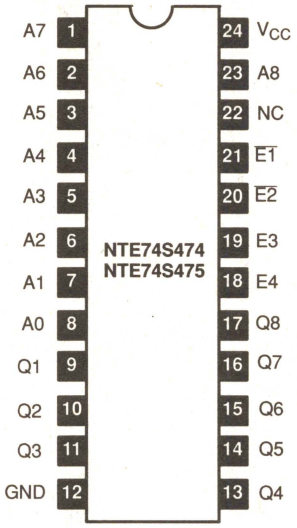

Dual BCD Decade Ripple Counter — 16–Lead DIP, See Diag 249

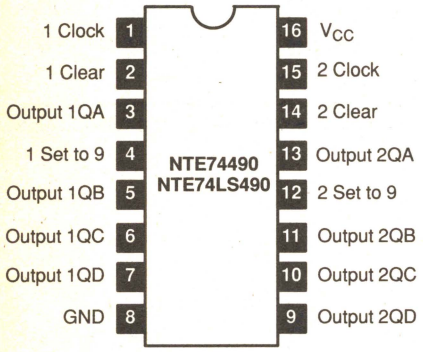

Octal Buffer/Line Driver w/3–State Outputs — 20–Lead DIP, See Diag 294

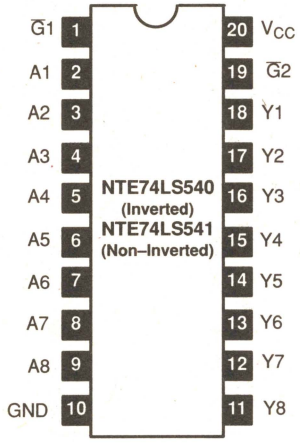

2048–Bit TTL PROM — 16–Lead DIP, See Diag 249

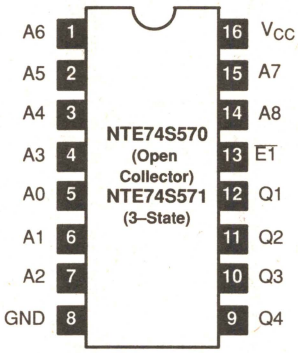

4096–Bit TTL PROM — 18–Lead DIP, See Diag 298

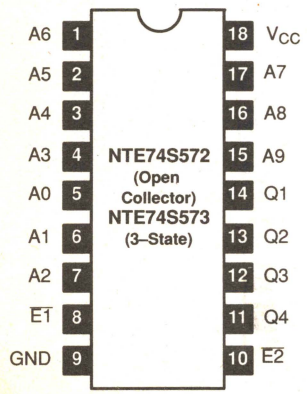

Voltage Controlled Oscillator — 14–Lead DIP, See Diag 247

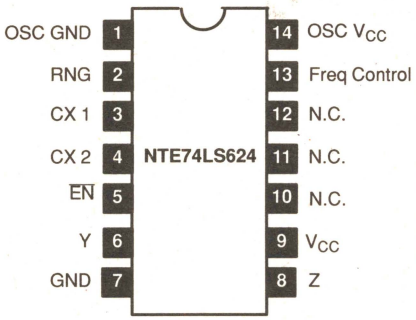

Dual Voltage Controlled Oscillator — 16–Lead DIP, See Diag 249

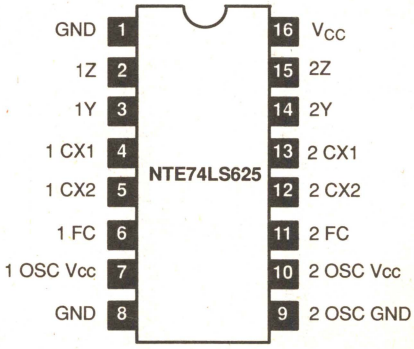

See Diagrams, beginning on Page 1–320

(TRANSISTOR TRANSISTOR LOGIC)

Dual Voltage Controlled Oscillator — 16–Lead DIP, See Diag 249

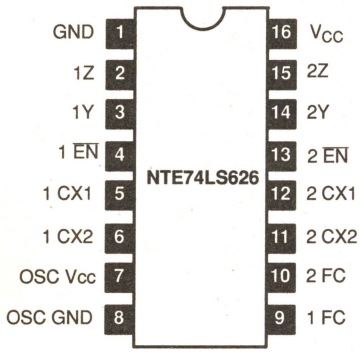

Dual Voltage Controlled Oscillator — 14–Lead DIP, See Diag 247

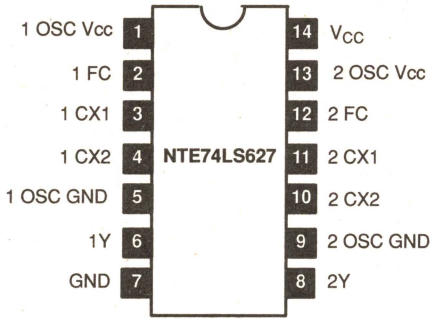

Dual Voltage Controlled Oscillator — 16–Lead DIP, See Diag 249

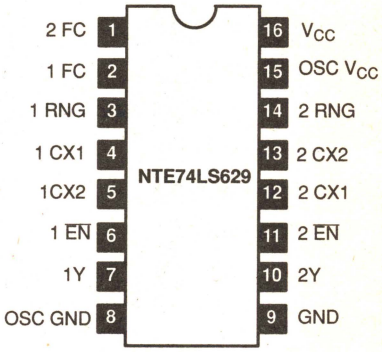

Inverting Octal Bus Transceiver — 20–Lead DIP, See Diag 294

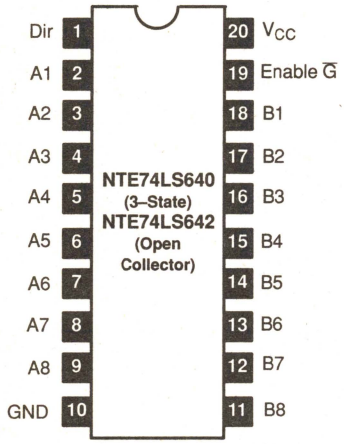

Non–Inverting Octal Bus Transceiver — 20–Lead DIP, See Diag 294

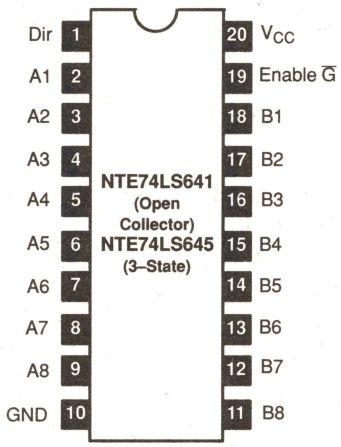

True & Inverting Octal Bus Transceiver w/3–State Outputs — 20–Lead DIP, See Diag 294

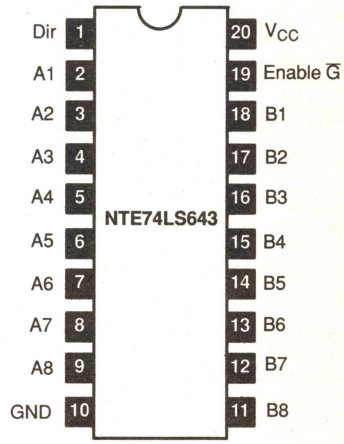

4–by–4 Register File w/Simultaneous Read/Write, 3–State Outputs and Expandable to 1024 Words — 16–Lead DIP, See Diag 249

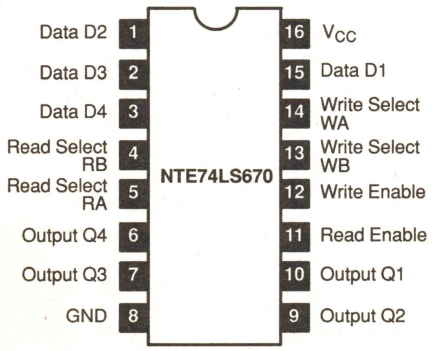

Hex Inverting Buffer (CMOS) — 14–Lead DIP, See Diag 247

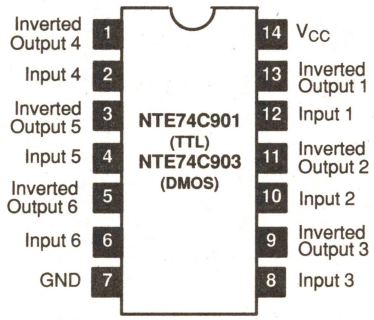

Hex Non–Inverting Buffer (CMOS) — 14–Lead DIP, See Diag 247

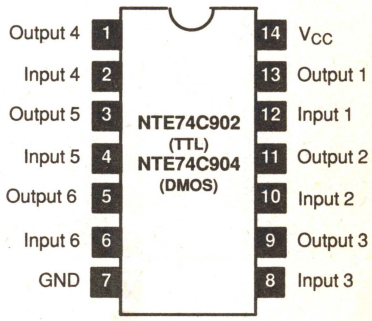

See Diagrams, beginning on Page 1–320

(TRANSISTOR TRANSISTOR LOGIC)

CMOS, 16–Key Encoder — **18–Lead DIP, See Diag 293**

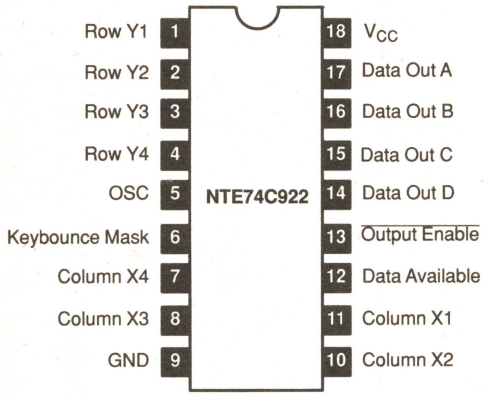

CMOS, 20–Key Encoder — **20–Lead DIP, See Diag 294**

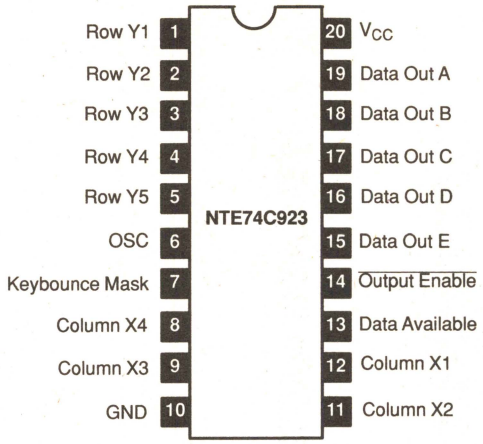

4–Digit Counter w/Multiplexed 7–Segment Output Driver — **16–Lead DIP, See Diag 249**

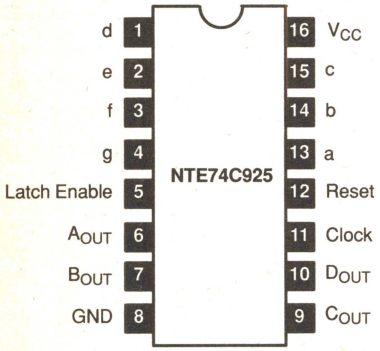

Tri–State Hex Buffer — **16–Lead DIP, See Diag 249**

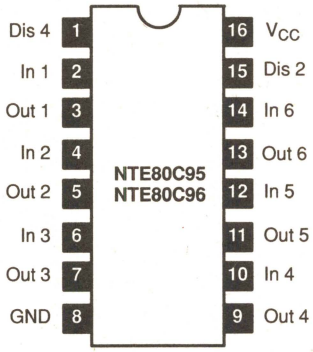

3–State Hex Buffer — **16–Lead DIP, See Diag 249**

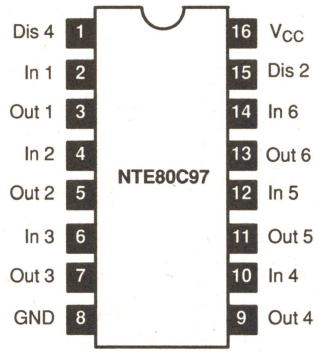

Quad 2–Input Data Selector/Multiplexer — **16–Lead DIP, See Diag 249**

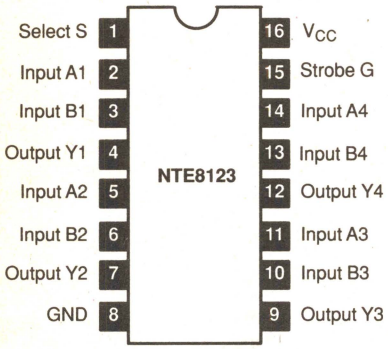

1–Line–to–8–Line Demultiplexer — **16–Lead DIP, See Diag 249**

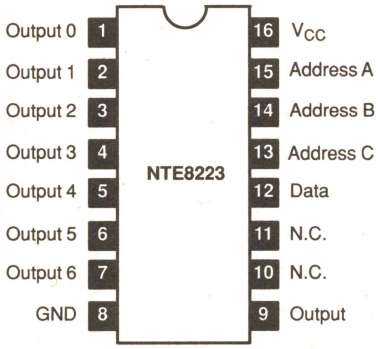

Dual 4–Bit Latch w/Clear — **24–Lead DIP, See Diag 252**

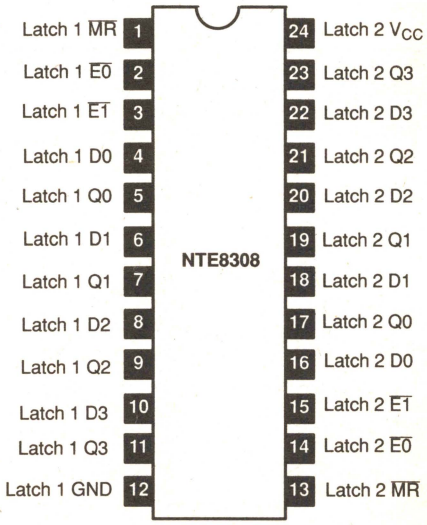

See Diagrams, beginning on Page 1–320

(TRANSISTOR TRANSISTOR LOGIC)

Data Selector/ Multiplexer — 16–Lead DIP, See Diag. 249

NTE8309

Output Y1	1	16	V_{CC}
Output $\overline{Y1}$	2	15	Output Y2
Select Input B	3	14	Output $\overline{Y2}$
1C0	4	13	Select Input A
1C1	5	12	2C0
1C2	6	11	2C2
1C3	7	10	2C2
GND	8	9	2C3

4–Bit Latch — 16–Lead DIP, See Diag. 249

NTE8314

$\overline{E}$	1	16	V_{CC}
$\overline{S0}$	2	15	Q0
$\overline{D0}$	3	14	$\overline{S1}$
D1	4	13	Q1
$\overline{S2}$	5	12	Q2
D2	6	11	$\overline{S3}$
D3	7	10	Q3
GND	8	9	$\overline{MR}$

Synchronous 4–Bit Binary Counter — 16–Lead DIP, See Diag. 249

NTE8316

$\overline{MR}$	1	16	V_{CC}
CP	2	15	TC
P0	3	14	Q0
P1	4	13	Q1
P2	5	12	Q2
P3	6	11	Q3
CEP	7	10	CET
GND	8	9	$\overline{PE}$

8–Bit Priority Encoder — 16–Lead DIP, See Diag. 249

NTE8318

$\overline{4}$	1	16	V_{CC}
$\overline{5}$	2	15	$\overline{E0}$
$\overline{6}$	3	14	$\overline{GS}$
$\overline{7}$	4	13	$\overline{3}$
$\overline{E1}$	5	12	$\overline{2}$
$\overline{A2}$	6	11	$\overline{1}$
$\overline{A1}$	7	10	$\overline{0}$
GND	8	9	$\overline{A0}$

Dual 1–of–4 Decoder — 16–Lead DIP, See Diag. 249

NTE8321

$\overline{E}$	1	16	V_{CC}
A0	2	15	$\overline{E}$
A1	3	14	A0
$\overline{0}$	4	13	A1
$\overline{1}$	5	12	$\overline{0}$
$\overline{2}$	6	11	$\overline{1}$
$\overline{3}$	7	10	$\overline{2}$
GND	8	9	$\overline{3}$

Dual 8–Bit Shift Register — 16–Lead DIP, See Diag. 249

NTE8328

$\overline{MR}$	1	16	V_{CC}
Reg 2 $\overline{Q7}$	2	15	Reg 1 $\overline{Q7}$
Reg 2 Q7	3	14	Reg 1 Q7
Reg 2 S	4	13	Reg 1 S
Reg 2 D1	5	12	Reg 1 D1
Reg 2 D0	6	11	Reg 1 D0
Reg 2 CP	7	10	Reg 1 CP
GND	8	9	CP Comp

7–Segment Decoder/Driver/Latch (w/Open Collector Outputs) — 16–Lead DIP, See Diag. 249

NTE8370

A1	1	16	V_{CC}
A2	2	15	$\overline{f}$
$\overline{LE}$	3	14	$\overline{g}$
$\overline{RBO}$	4	13	$\overline{a}$
$\overline{RBI}$	5	12	$\overline{b}$
A3	6	11	$\overline{c}$
A0	7	10	$\overline{d}$
GND	8	9	$\overline{e}$

7–Segment Latch/Decoder/Driver for Common Anode LED — 16–Lead DIP, See Diag. 249

NTE8374

A1	1	16	V_{CC}
A2	2	15	f
EI	3	14	g
RBO	4	13	a
RBI	5	12	b
A3	6	11	c
A0	7	10	d
GND	8	9	e

Modulator–N–Divider, Cascadable — 16–Lead DIP, See Diag. 249

NTE8520

Serial Input	1	16	Preset
P1	2	15	External EX–OR
Serial/Parallel Input	3	14	EX–OR Input
P2	4	13	Output
V_{CC}	5	12	GND
P3	6	11	0000 Detect
P4	7	10	Serial Output
GND	8	9	EX–OR Control

3–State Quad I/O Register — 16–Lead DIP, See Diag. 249

NTE8542

Dis 2	1	16	V_{CC}
A1	2	15	Dis 1
B1	3	14	A4
B2	4	13	B4
A2	5	12	B3
$\overline{E2}$	6	11	A3
$\overline{E1}$	7	10	Clock
GND	8	9	Clear

Tri–State 8–Bit Universal I/O Shift Register — 16–Lead DIP, See Diag. 249

NTE8546

C1	1	16	V_{CC}
LSI/RSO	2	15	C2
I/O 8	3	14	RSI/LSO
I/O 7	4	13	I/O 1
I/O 6	5	12	I/O 2
I/O 5	6	11	I/O 3
Clock	7	10	I/O 4
GND	8	9	OD

3–State Programmable Binary Counter — 16–Lead DIP, See Diag. 249

NTE8556

$\overline{CE}$	1	16	V_{CC}
QD	2	15	Max Count
QC	3	14	I/O D
Reset	4	13	I/O C
QB	5	12	OD
QA	6	11	I/O B
$\overline{Load}$	7	10	I/O A
GND	8	9	Clock

See Diagrams, beginning on Page 1–320

(TRANSISTOR TRANSISTOR LOGIC)

Low Power, Dual, 4–Bit Latch — **24–Lead DIP, See Diag 252**

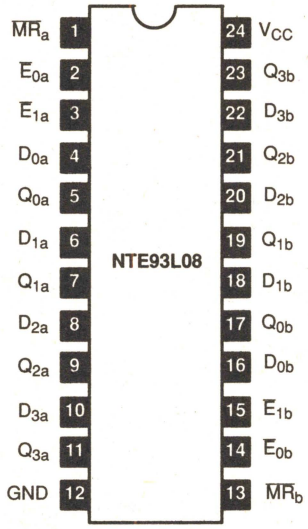

Low Power, 4–Bit Binary Counter — **16–Lead DIP, See Diag 249**

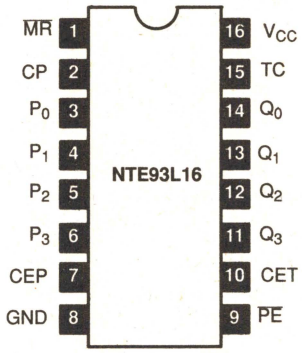

Retriggerable Monostable Multivibrator — **14–Lead DIP, See Diag 247**

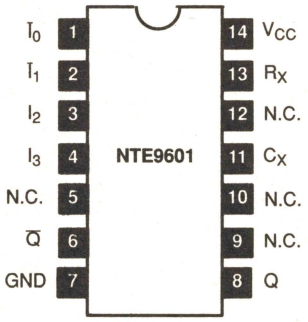

Dual Retriggerable/Resettable Monostable Multivibrator — **16–Lead DIP, See Diag 249**

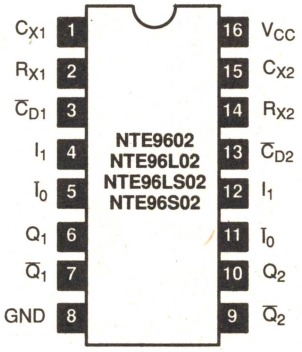

See Diagrams, beginning on Page 1–320

DISPLAY DRIVERS

7–Channel Darlington Array/Driver — **16–Lead DIP, See Diag. 249**

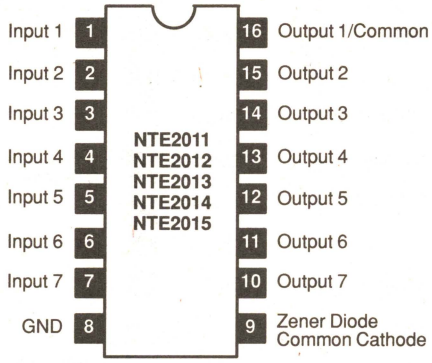

NTE2011 for PMOS/CMOS
NTE2013 for 5V TTL/CMOS
NTE2015 for High Voltage TTL
NTE2012 for 14–25V PMOS
NTE2014 for 6–15V CMOS/PMOS

8–Channel Darlington Array/Driver — **18–Lead DIP, See Diag. 298**

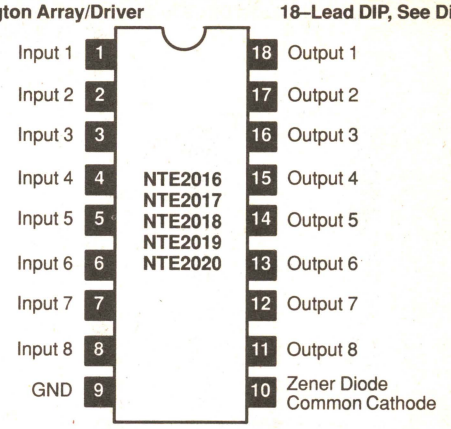

NTE2016 for PMOS/CMOS
NTE2018 for 5V TTL/CMOS
NTE2020 for High Voltage TTL
NTE2017 for 14–25V PMOS
NTE2019 for 6–15V CMOS/PMOS

8–Digit/Segment Fluorescent Display Driver — **18–Lead DIP, See Diag. 298**

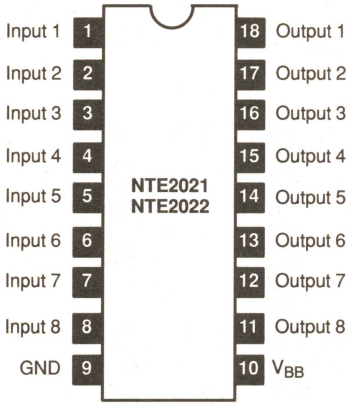

NTE2021 for 5V TTL/CMOS
NTE2022 for 6–15V CMOS/PMOS

General Purpose, High Current 7–Segment Display Driver — **16–Lead DIP, See Diag. 249**

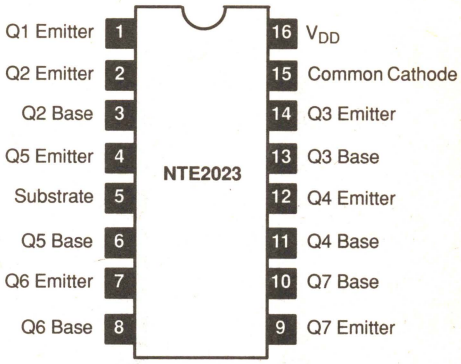

2–Digit BCD–to–7–Segment Decoder/Driver, V_{CC} = 6V Max — **24–Lead DIP, See Diag. 252**

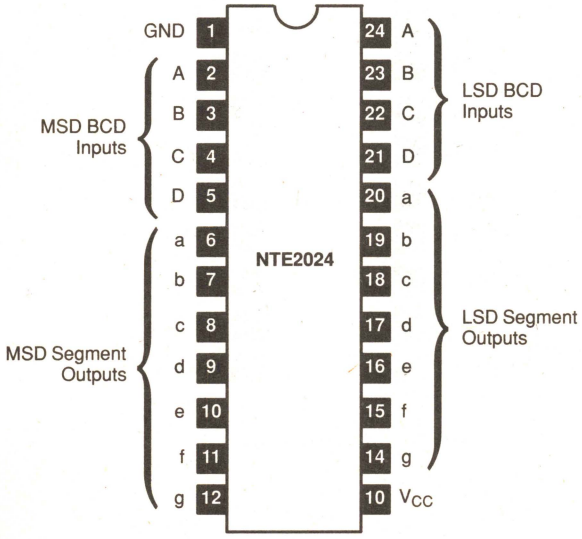

Quad HV Driver for Gas–Discharge Display — **14–Lead DIP, See Diag. 247**

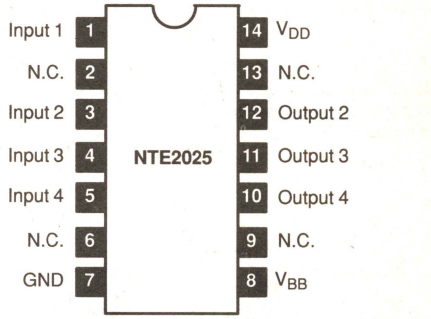

HV/Current Gas–Discharge Display Driver — **16–Lead DIP, See Diag. 249**

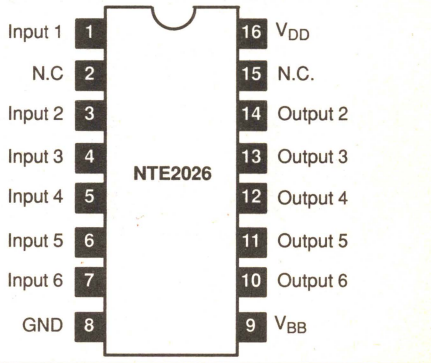

See Diagrams, beginning on Page 1–320

DISPLAY DRIVERS

Hex LED Digit Driver — **14–Lead DIP, See Diag. 247**

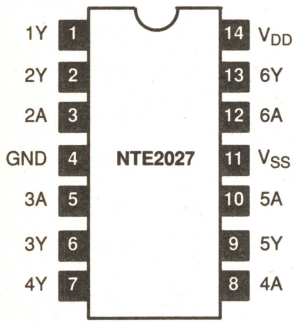

7–Segment HV Decoder/Driver — **16–Lead DIP, See Diag. 249**

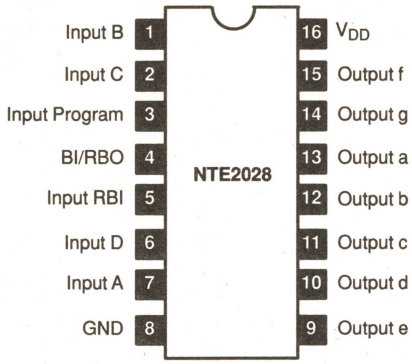

7–Digit Gas–Discharge Display Anode Driver — **16–Lead DIP, See Diag. 249**

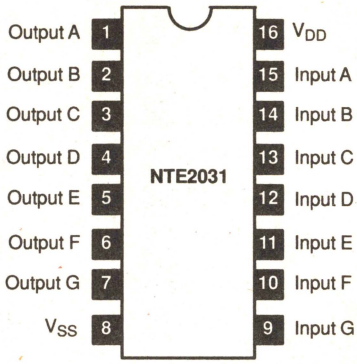

Note: Requires low input to turn driver on.

8–Segment Gas Discharge Display Cathode Driver — **18–Lead DIP, See Diag. 247**

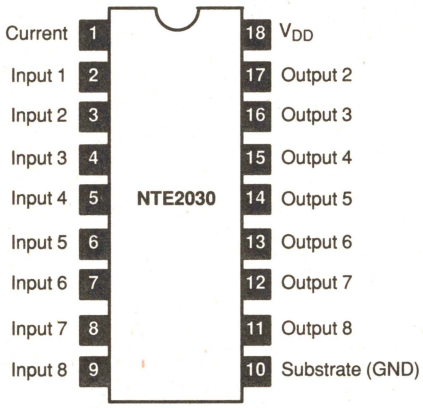

BCD–to–7–Segment Decoder/Driver w/TTL Compatible Input — **16–Lead DIP, See Diag. 247**

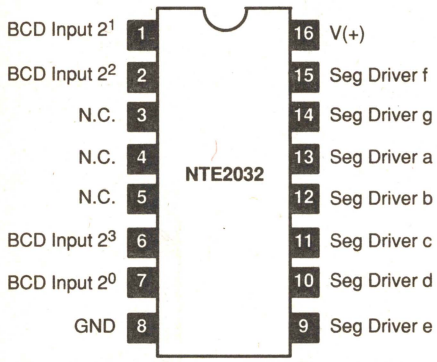

3 1/2 Digit Single Chip A/D Converter/LED Display Driver (CMOS) — **40–Lead DIP, See Diag. 299**

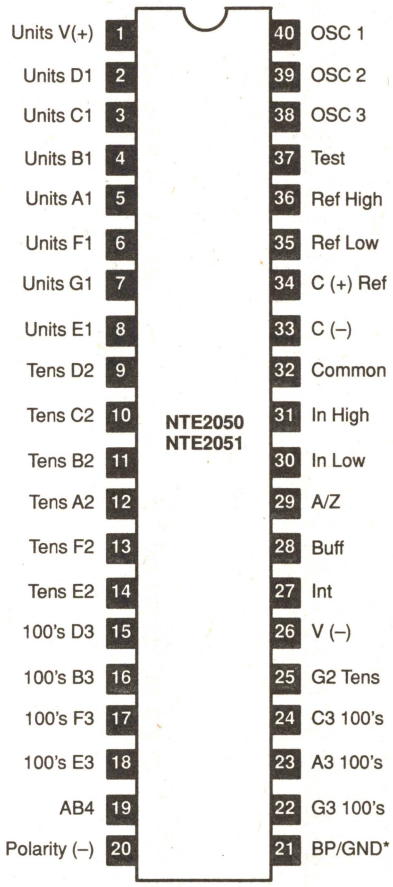

Note: Pin 21 is ground on the NTE2050

See Diagrams, beginning on Page 1–320

8–Bit µP Compatible A/D Converter (CMOS) — **20–Lead DIP, See Diag. 339**

NTE2053

$\overline{CS}$	1	20	Vcc
$\overline{RD}$	2	19	Clk R
$\overline{WR}$	3	18	DB0
Clk In	4	17	DB1
$\overline{INTR}$	5	16	DB2
Vin (+)	6	15	DB3
Vin (–)	7	14	DB4
A GND	8	13	DB5
Vref/2	9	12	DB6
D GND	10	11	DB7

A/D Converter for 3–Digit Display — **16–Lead DIP, See Diag. 249**

NTE2054

BCD Output 2^1	1	16	BCD Output 2^3
BCD Output 2^0	2	15	BCD Output 2^2
Digit Select Output NSD	3	14	V (+)
Digit Select Output MSD	4	13	Gain Adjust
Digit Select Output LSD	5	12	Integrating Cap
Hold/Bypass	6	11	High Input
GND	7	10	Low Input
Zero Adjust	8	9	Zero Adjust

PMOS LSI Alarm Clock Ckt — **40–Lead DIP, See Diag. 299**

NTE2060
NTE2061

AM Output	1	40	PM Output
10 Hrs b & c	2	39	Colon (1Hz)
Hrs f	3	38	12/24 Hr Select
Hrs g	4	37	N.C./Blanking Input*
Hrs a	5	36	50/60 Hz Select
Hrs b	6	35	50/60 Hz Input
Hrs d	7	34	Fast Set Input
Hrs c	8	33	Slow Set Input
Hrs e	9	32	Second Display Input
10 Mins f	10	31	Alarm Display Input
10 Mins g	11	30	Sleep Display Input
10 Mins–a & d	12	29	V_{DD}
10 Mins b	13	28	V_{SS}
10Mins e	14	27	Sleep Output
10 Mins c	15	26	Alarm Off Input
Mins f	16	25	Alarm Output
Mins g	17	24	Snooze Input
Mins a	18	23	Output Common Source
Mins b	19	22	Mins–c
Mins e	20	21	Mins–d

Note: Pin 37 is Blanking Input on the NTE2061

PMOS Digital Alarm Clock — **28–Lead DIP, See Diag. 445**

NTE2062

AM & 10's Hr ag & de	1	28	12/24 Hr Select
PM & 10's Hr b	2	27	CR Input
10's Hr c & Hr c	3	26	50/60 Hz Select
Hr b & g	4	25	50/60 Hz Input
Hr c & d	5	24	Snooze Input
Hr a & f	6	23	Sleep Input
10's Min a & f	7	122	Hour Set
10's Min b & g	8	21	Min Set
Min c & d	9	20	V_{DD}
10's Min e & Min e	10	19	Alarm Disp
Min b & g	11	18	Alarm Off
Min c & d	12	17	Sleep Out
Min a & f	13	16	Alarm Out
Colon Out	14	15	V_{SS}

7–Stage Transistor Array w/Clamp Diode & Strobe — **18–Lead DIP, See Diag. 298/340**

NTE2070
NTE2071

Test Point	1	18	STB
Input 1	2	17	Output 1
Input 2	3	16	Output 2
Input 3	4	15	Output 3
Input 4	5	14	Output 4
Input 5	6	13	Output 5
Input 6	7	12	Output 6
Input 7	8	11	Output 7
GND	9	10	V_{CC}

See Diagrams, beginning on Page 1–320

DISPLAY DRIVERS

6–Stage Transistor Array w/Clamp Diode & Strobe — 16–Lead DIP, See Diag. 249

NTE2072 / NTE2073

STB	1	16	V_{CC}
Input 1	2	15	Output 1
Input 2	3	14	Output 2
Input 3	4	13	Output 3
Input 4	5	12	Output 4
Input 5	6	11	Output 5
Input 6	7	10	Output 6
GND	8	9	Common

7–Stage Darlington Transistor Array w/Clamp Diode — 16–Lead DIP, See Diag. 249

NTE2074 / NTE2076

Input 1	1	16	Output 1
Input 2	2	15	Output 2
Input 3	3	14	Output 3
Input 4	4	13	Output 4
Input 5	5	12	Output 5
Input 6	6	11	Output 6
Input 7	7	10	Output 7
GND	8	9	Common

5–Stage Transistor Array w/Strobe — 14–Lead DIP, See Diag. 247

NTE2075

STB	1	14	V_{CC}
Input 1	2	13	Output 1
Input 2	3	12	Output 2
Input 3	4	11	Output 3
Input 4	5	10	Output 4
Input 5	6	9	Output 5
Input 6	7	8	GND

6–Stage Darlington Transistor Array w/Clamp Diode — 14–Lead DIP, See Diag. 247

NTE2077

Input 1	1	14	Output 1
Input 2	2	13	Output 2
Input 3	3	12	Output 3
Input 4	4	11	Output 4
Input 5	5	10	Output 5
Input 6	6	9	Output 6
GND	7	8	Common

5–Stage Darlington Transistor Array — 14–Lead DIP, See Diag. 247

NTE2078 / NTE2084

N.C.	1	14	N.C.
Input 1	2	13	Output 1
Input 2	3	12	Output 2
Input 3	4	11	Output 3
Input 4	5	10	Output 4
Input 5	6	9	Output 5
GND	7	8	N.C.

7–Stage Darlington Transistor Array — 16–Lead DIP, See Diag. 249

NTE2079

Input 1	1	16	Output 1
Input 2	2	15	Output 2
Input 3	3	14	Output 3
Input 4	4	13	Output 4
Input 5	5	12	Output 5
Input 6	6	11	Output 6
Input 7	7	10	Output 7
GND	8	9	N.C.

7–Stage Driver Array — 18–Lead DIP, See Diag. 341

NTE2080

Test	1	18	ST
In 1	2	17	Out 1
In 2	3	16	Out 2
In 3	4	15	Out 3
In 4	5	14	Out 4
In 5	6	13	Out 5
In 6	7	12	Out 6
In 7	8	11	Out 7
GND	9	10	V_{CC}

7–Stage Driver Array — 16–Lead DIP, See Diag. 249

NTE2081

In 1	1	16	Out 1
In 2	2	15	Out 2
In 3	3	14	Out 3
In 4	4	13	Out 4
In 5	5	12	Out 5
In 6	6	11	Out 6
In 7	7	10	Out 7
GND	8	9	V_{CC}

6–Stage Darlington Transistor Array — 14–Lead DIP, See Diag. 247

NTE2082

Input 1	1	14	Output 1
Input 2	2	13	Output 2
Input 3	3	12	Output 3
Input 4	4	11	Output 4
Input 5	5	10	Output 5
Input 6	6	9	Output 6
GND	7	8	Common

6–Stage Darlington Transistor Array — 14–Lead DIP, See Diag. 247

NTE2083

Input 1	1	14	Output 1
Input 2	2	13	Output 2
Input 3	3	12	Output 3
Input 4	4	11	Output 4
Input 5	5	10	Output 5
Input 6	6	9	Output 6
GND	7	8	N.C.

4–Stage Darlington Array — 16–Lead DIP, See Diag. 249

NTE2085 / NTE2086

K	1	16	C
C	2	15	N.C.
B	3	14	B
GND	4	13	GND
GND	5	12	GND
B	6	11	B
C	7	10	N.C.
K	8	9	C

4–Stage Darlington Array w/Pre–Drive Stage — 16–Lead DIP, See Diag. 249

NTE2087 / NTE2088

K	1	16	C
C	2	15	B
B	3	14	V_S
GND	4	13	GND
GND	5	12	GND
B	6	11	B
N.C.	7	10	C
C	8	9	K

See Diagrams, beginning on Page 1–320

Schottky Quad 3–Stage Bus Transceiver — 16–Lead DIP, See Diag. 249

NTE6880 (Inverting) / NTE6889 (Non–Inverting)

$\overline{\text{Receiver Enable}}$ Input	1	16	V_{CC}
Receiver Output 1	2	15	Driver Enable Input
Bus 1	3	14	Receiver Output 4
Driver Input 1	4	13	Bus 4
Receiver Output 2	5	12	Driver input 4
Bus 2	6	11	Receiver Output 3
Driver Input 2	7	10	Bus 3
GND	8	9	Driver Input 3

High Speed Hex 3–State Buffer w/Common Enable — 16–Lead DIP, See Diag. 249

NTE6885 (Non–Inverting) / NTE6886 (Inverting)

$\overline{\text{Enable}}$ 1	1	16	V_{CC}
Input A	2	15	$\overline{\text{Enable}}$ 2
Output A	3	14	Input F
Input B	4	13	Output F
Output B	5	12	Input E
Input C	6	11	Output E
Output C	7	10	Input D
GND	8	9	Output D

High Speed Hex 3–State Buffer w/2 & 4 Line Enable — 16–Lead DIP, See Diag. 249

NTE6887 (Non–Inverting) / NTE6888 (Inverting)

$\overline{\text{Enable}}$ 4	1	16	V_{CC}
Input A	2	15	$\overline{\text{Enable}}$ 2
Output A	3	14	Input F
Input B	4	13	Output F
Output B	5	12	Input E
Input C	6	11	Output E
Output C	7	10	Input D
GND	8	9	Output D

DTL Quad Line Driver, RS232C — 16–Lead DIP, See Diag. 249

NTE75188

V_{EE}	1	14	V_{CC}
Input A	2	13	Input D1
Output A	3	12	Input D2
Input B1	4	11	Output D
Input B2	5	10	Input C1
Output B	6	9	Input C2
GND	7	8	Output C

DTL Quad Line Receiver, RS232C — 14–Lead DIP, See Diag. 247

NTE75189

Input A	1	14	V_{CC}
Response Control A	2	13	Input D
Output A	3	12	Response Control D
Input B	4	11	Output D
Response Control B	5	10	Input C
Output B	6	9	Response Control C
GND	7	8	Output C

Dual TTL–MOS Driver — 14–Lead DIP, See Diag. 247

NTE75322

N.C.	1	14	V_{CC} 1
N.C.	2	13	N.C.
A 1	3	12	Y 1
E	4	11	V_{CC} 2
A 2	5	10	Y 2
N.C.	6	9	N.C.
GND	7	8	N.C.

Dual Peripheral AND Driver — 14–Lead DIP, See Diag. 247

NTE75450B

G	1	14	V_{CC}
A 1	2	13	A 2
Y 1	3	12	Y 2
B 1	4	11	B 2
C 1	5	10	C 2
E 1	6	9	E 2
GND	7	8	Sub

Dual Peripheral Driver — 8–Lead DIP, See Diag. 297

NTE75451B / NTE75452B / NTE75453B / NTE75454B

1 A	1	8	V_{CC}
1 B	2	7	2 B
1 Y	3	6	2 A
GND	4	5	2 Y

NTE75451B AND
NTE75453B OR

NTE75452B NAND
NTE75454B NOR

4–Segment MOS to LED Anode Driver — 14–Lead DIP, See Diag. 247

NTE75491B

1A	1	14	4A
1E	2	13	4E
1C	3	12	4C
GND	4	11	V_{SS}
2C	5	10	3C
2E	6	9	3E
2A	7	8	3A

6–Digit MOS to LED Cathode Driver — 14–Lead DIP, See Diag. 247

NTE75492B

1Y	1	14	1A
2Y	2	13	6Y
2A	3	12	6A
GND	4	11	V_{SS}
3A	5	10	5A
3Y	6	9	5Y
4Y	7	8	4A

4–Segment MOS to LED Anode Driver — 16–Lead DIP, See Diag. 249

NTE75493

V_{SS}	1	16	V_{CC}
R_{SET} 1	2	15	R_{SET} 4
I_{OUT} 1	3	14	I_{OUT} 4
IN 1	4	13	IN 4
IN 2	5	12	IN 3
R_{SET} 2	6	11	I_{OUT} 3
I_{OUT} 2	7	10	R_{SET} 3
GND	8	9	CE

6–Digit MOS to LED Cathode Driver — 16–Lead DIP, See Diag. 249

NTE75494

N.C.	1	16	V_{CC}
IN 1	2	15	IN 6
OUT 1	3	14	OUT 6
OUT 2	4	13	OUT 5
IN 2	5	12	IN 5
OUT 3	6	11	OUT 4
IN 3	7	10	IN 4
GND	8	9	CE

See Diagrams, beginning on Page 1–320

(DIODE TRANSISTOR LOGIC)

Dual J–K Flip–Flop **14–Lead DIP, See Diag. 247**
(Power Drain = 28/34mA Max)

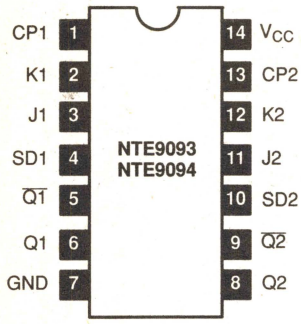

Dual J–K Flip–Flop **14–Lead DIP, See Diag. 247**
(Power Drain = 34/28mA Max)

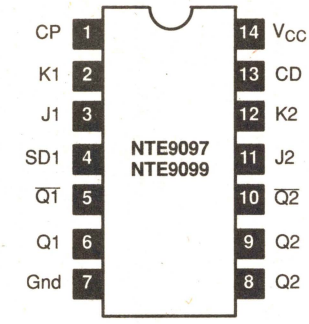

Hex Inverter **14–Lead DIP, See Diag. 247**

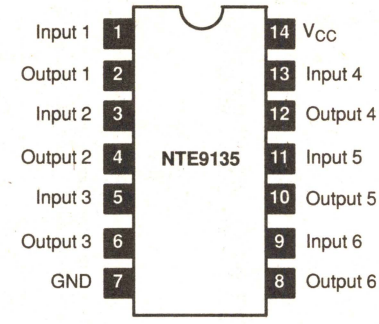

Quad, 2–Input Buffer **14–Lead DIP, See Diag. 297**
Hex Inverter
(Output Loading Factor = 25/27)

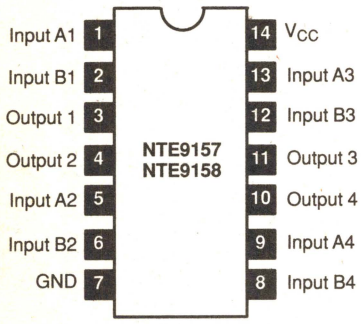

5–Input NAND Gate **14–Lead DIP, See Diag. 297**
(Output Loading Factor = 8/7)

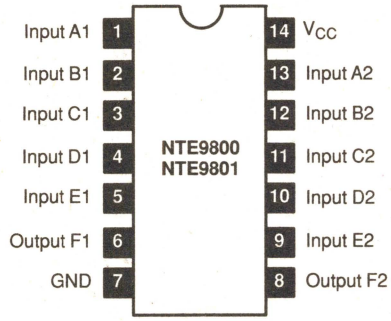

Expandable 8–Input NAND Gate **14–Lead DIP, See Diag. 247**
(Output Loading Factor = 8/7)

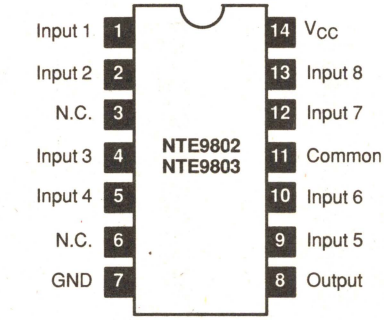

10–Input NAND Gate **14–Lead DIP, See Diag. 247**
(Output Loading Factor = 8/7)

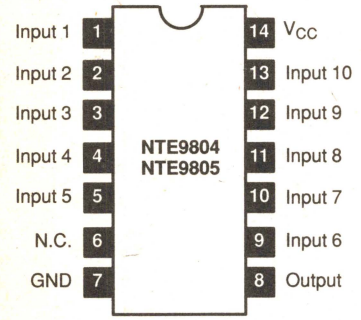

Quad, 2–Input Gate **14–Lead DIP, See Diag. 247**
(Output Loading Factor = 8/7)

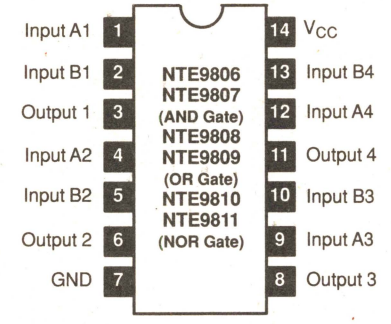

Quad, 2–Input Exclusive OR Gate **14–Lead DIP, See Diag. 247**

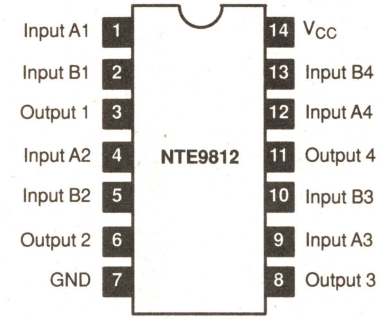

Quad Latch **14–Lead DIP, See Diag. 247**

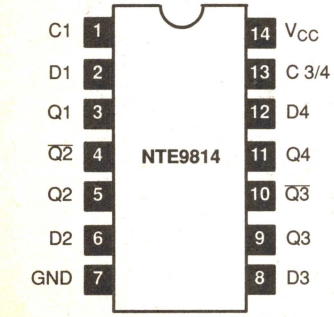

Quad, 2–Input NOR Gate (RTL) **14–Lead DIP, See Diag. 247**

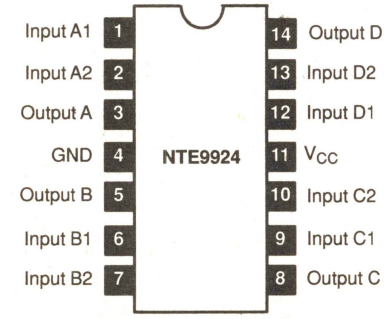

Expandable 4–Input NAND Gate **14–Lead DIP, See Diag. 247**
(Output Loading Factor = 8/7)

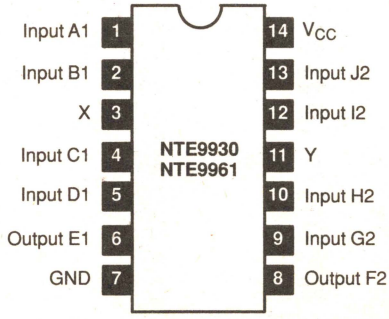

See Diagrams, beginning on Page 1–320

INTEGRATED CIRCUITS – DTL SERIES

(DIODE TRANSISTOR LOGIC)

Expandable Dual 4–Input Buffer (Output Loading Factor = 25/27) — 14–Lead DIP, See Diag. 247

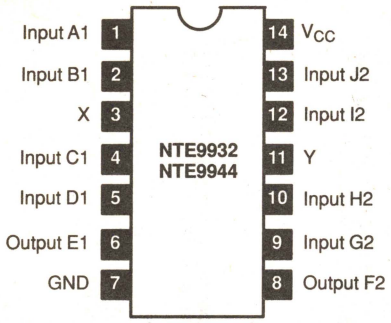

Expandable Dual 3–2–Input Buffer — 14–Lead DIP, See Diag. 247

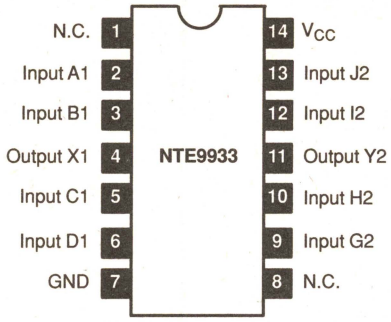

Hex Inverter (Output Loading Factor = 8/8/7) — 14–Lead DIP, See Diag. 247

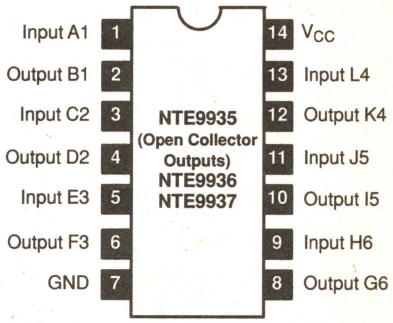

Clocked Flip–Flop (Pull–up Resistor = 6kΩ/2kΩ) — 14–Lead DIP, See Diag. 297

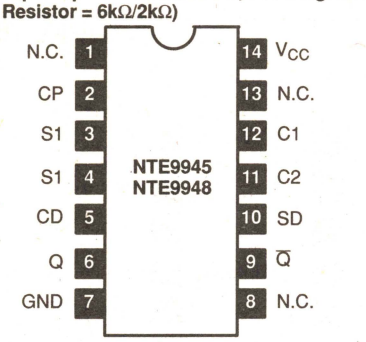

Quad, 2–Input NAND Gate (Pull–up Resistor = 6kΩ/2kΩ) — 14–Lead DIP, See Diag. 297

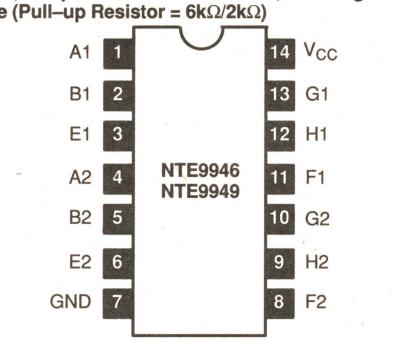

Expandable 8–Input NAND Gate — 14–Lead DIP, See Diag. 247

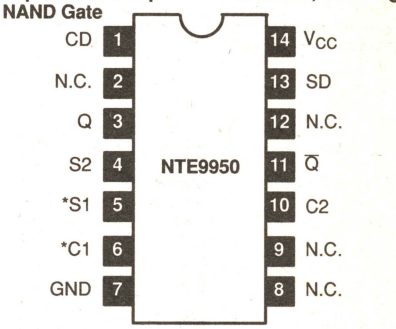

Note: These inputs are capacitively coupled

Monostable Multivibrator — 14–Lead DIP, See Diag. 247

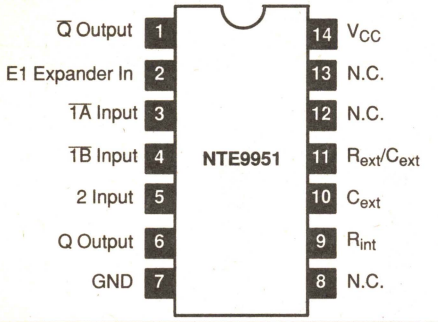

Dual, 4–Input Expandable NAND Gate — 14–Lead DIP, See Diag. 297

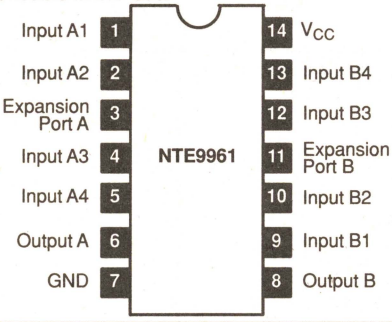

Triple 3–Input NAND Gate (Output Loading Factor = 8/7) — 14–Lead DIP, See Diag. 247

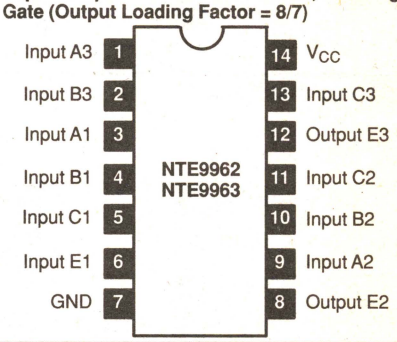

INTEGRATED CIRCUITS – HLL SERIES

(HIGH LEVEL LOGIC)

7–Segment Decoder/Driver/Latch — 16–Lead DIP, See Diag. 249

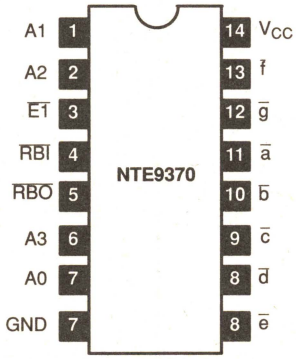

See Diagrams, beginning on Page 1–320

(HIGH THRESHOLD LOGIC)

Expandable, Dual, 4–Input NAND Gate — **14–Lead DIP, See Diag. 247**

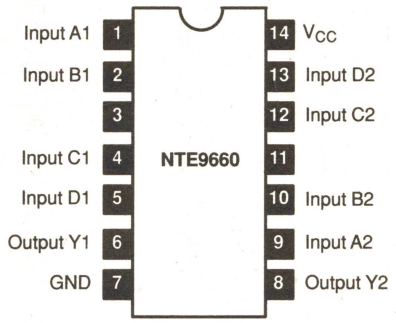

Expandable, 4–Input NAND Gate — **14–Lead DIP, See Diag. 247**

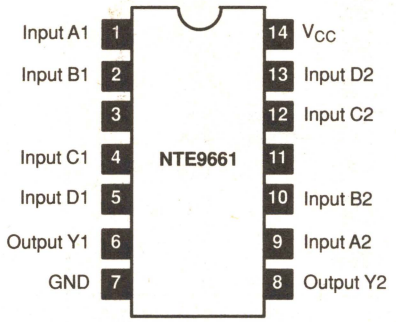

Master–Slave R–S Flip–Flop — **14–Lead DIP, See Diag. 247**

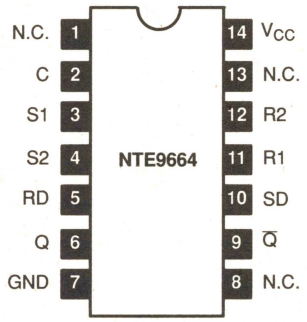

Triple Level Translator — **14–Lead DIP, See Diag. 247**

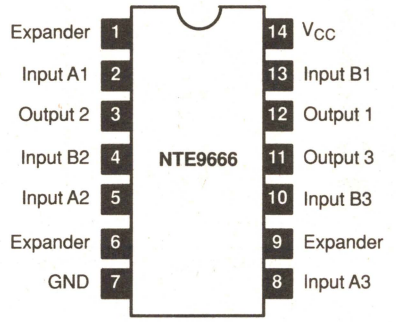

Quad, 2–Input NAND Gate — **14–Lead DIP, See Diag. 247**

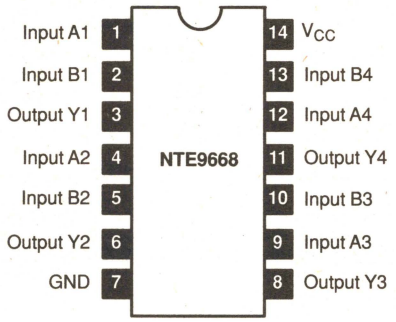

Dual, 4–Input Expander — **14–Lead DIP, See Diag. 247**

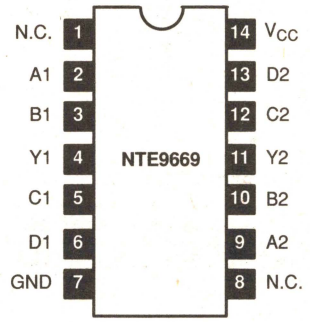

Triple, 3–Input NAND Gate — **14–Lead DIP, See Diag. 247**

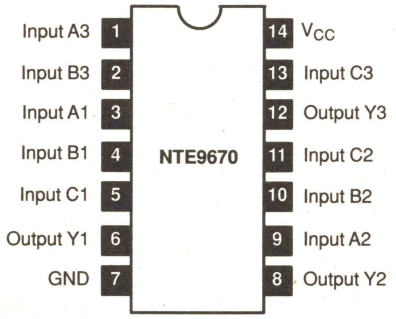

Triple, 3–Input NAND Gate — **14–Lead DIP, See Diag. 247**

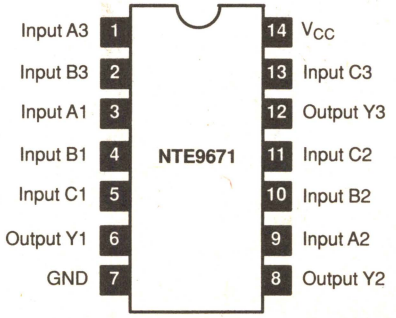

See Diagrams, beginning on Page 1–320

(HIGH THRESHOLD LOGIC)

Quad, 2–Input NAND Gate — 14–Lead DIP, See Diag. 247

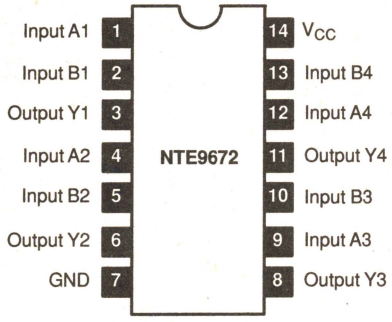

Dual Pulse Stretcher — 14–Lead DIP, See Diag. 247

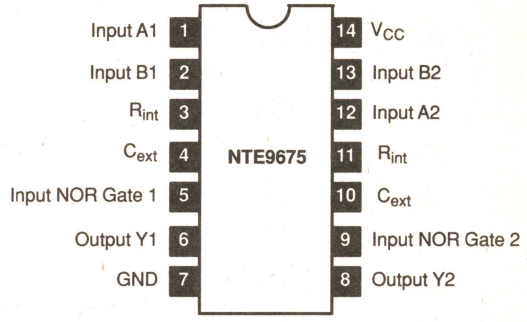

Hex Inverter — 14–Lead DIP, See Diag. 247

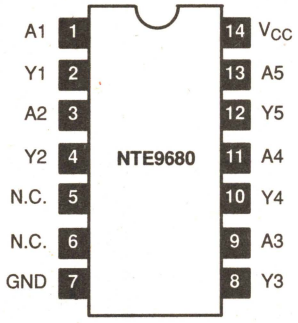

Hex Inverter — 14–Lead DIP, See Diag. 247

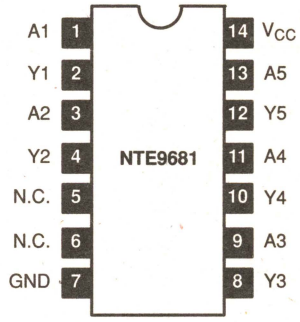

Quad Latch — 16–Lead DIP, See Diag. 248

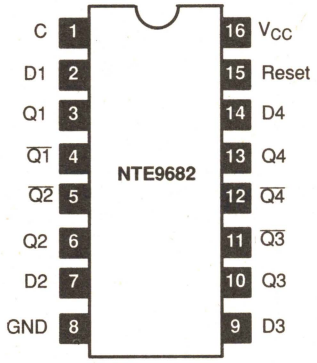

Hex Inverter — 14–Lead DIP, See Diag. 247

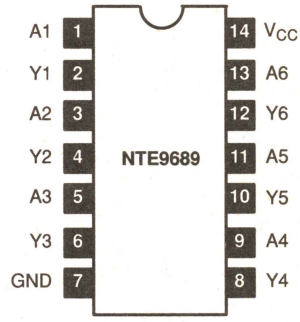

Hex Inverter/Translator — 14–Lead DIP, See Diag. 247

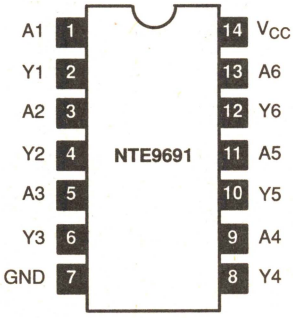

See Diagrams, beginning on Page 1–320

(Includes Peripherals)

8–Bit Multiplying Digital–To–Analog Converter — 16–Lead DIP, See Diag. 249

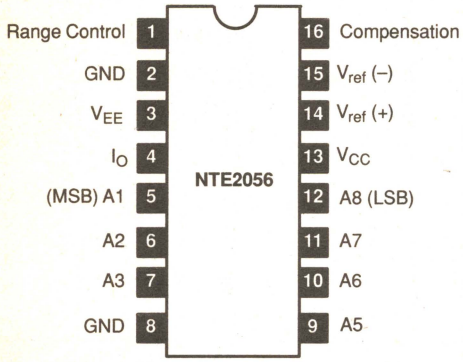

NMOS, 1K Static RAM (SRAM), 350ns — 16–Lead DIP, See Diag. 249

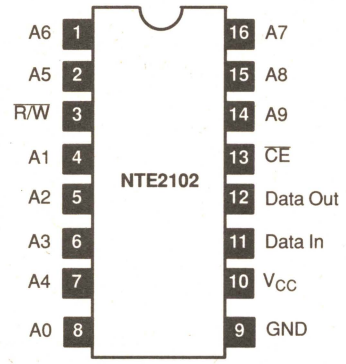

NMOS, 4K Dynamic RAM (DRAM), 200ns — 16–Lead DIP, See Diag. 249

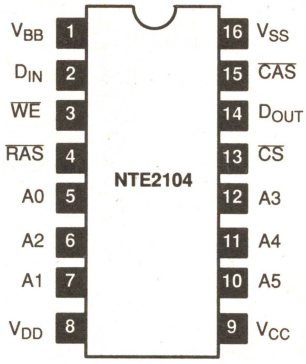

NMOS, 4K Dynamic RAM (DRAM), 200ns — 22–Lead DIP, See Diag. 336

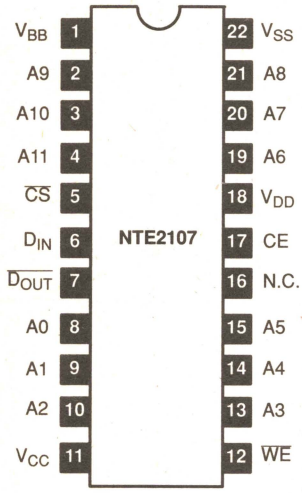

NMOS, 4K Static RAM (SRAM), 300ns — 18–Lead DIP, See Diag. 298

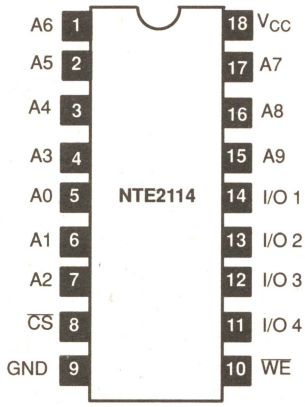

NMOS, 16K Dynamic RAM (DRAM), 200ns — 16–Lead DIP, See Diag. 249

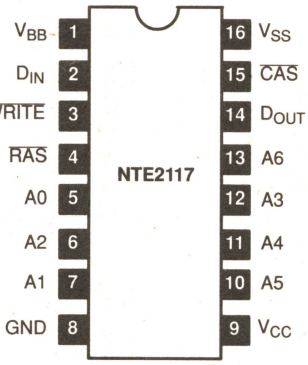

NMOS, 16K Static RAM (SRAM), 150ns — 24–Lead DIP, See Diag. 252

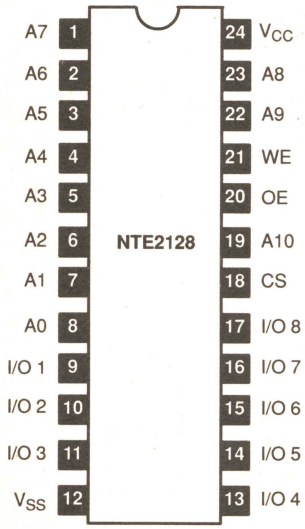

NMOS, 4K Static RAM (SRAM), 55ns — 18–Lead DIP, See Diag. 298

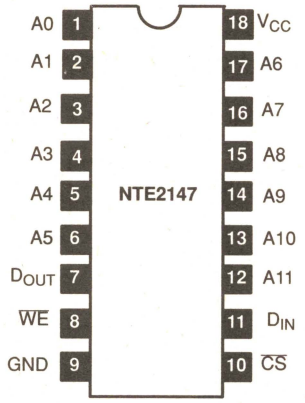

NMOS, 64K Dynamic RAM (DRAM), 150ns — 16–Lead DIP, See Diag. 249

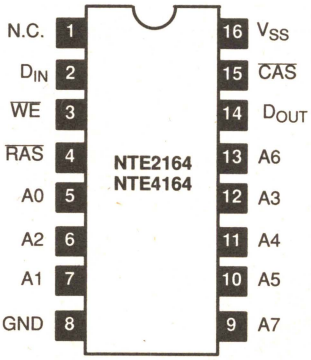

See Diagrams, beginning on Page 1–320

MICROPROCESSOR & MEMORY CIRCUITS

(Includes Peripherals)

NMOS, 32K EPROM, 300ns — **24–Lead DIP, See Diag. 300**

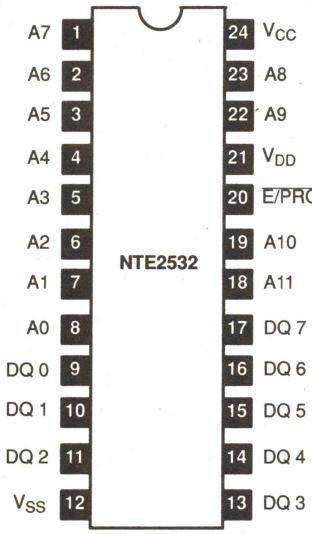

NMOS, 8K EPROM, UV, 450ns — **24–Lead DIP, See Diag. 300**

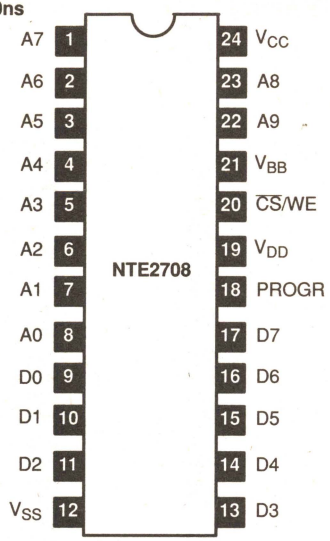

NMOS, 16K EPROM, UV, 450ns — **24–Lead DIP, See Diag. 300**

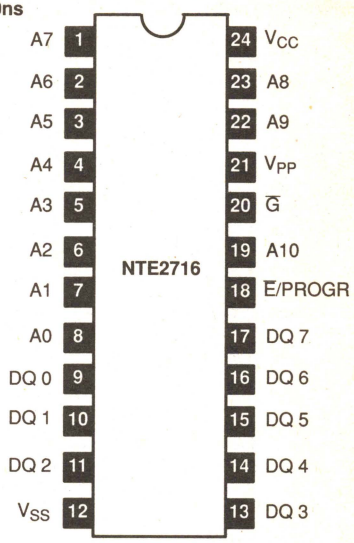

NMOS, 32K EPROM, UV, 200ns — **24–Lead DIP, See Diag. 300**

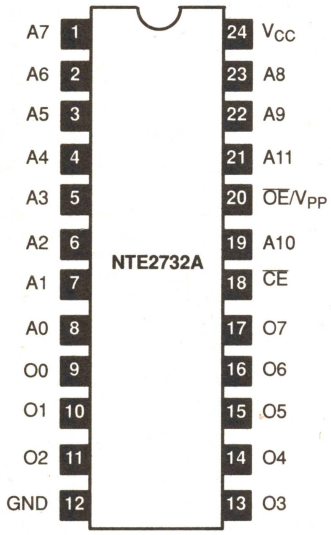

NMOS, 64K EPROM, 200ns — **28–Lead DIP, See Diag. 518**

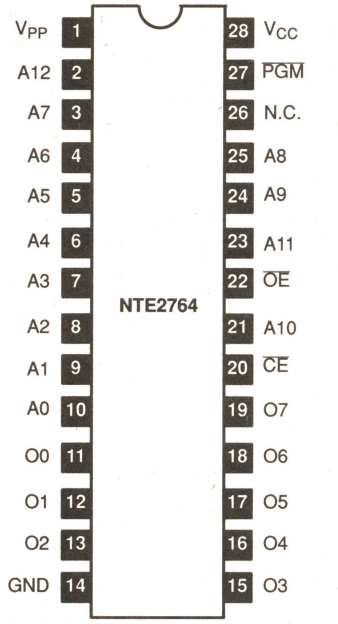

NMOS, 8 Bit Microprocessor (MPU), 4MHz — **40–Lead DIP, See Diag. 299**

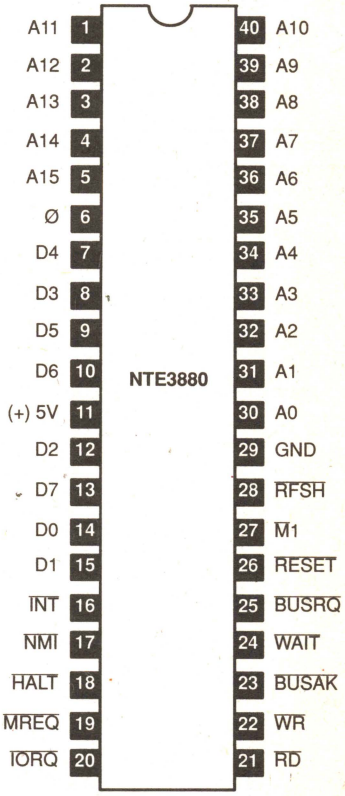

NMOS, 1400 Bit Serial EAROM, 200ns — **14–Lead DIP, See Diag. 249**

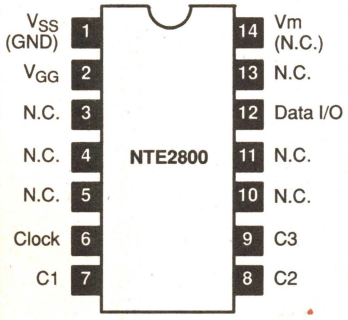

Floppy Disk Read Amplifier System — **28–Lead DIP, See Diag. 340**

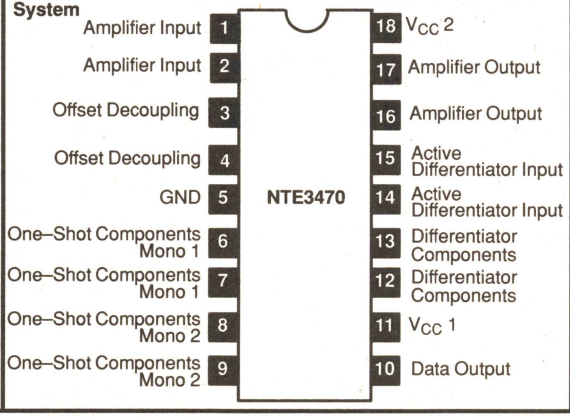

See Diagrams, beginning on Page 1–320

MICROPROCESSOR & MEMORY CIRCUITS

(Includes Peripherals)

NMOS, Parallel I/O Interface (PIO), 4MHz — **40–Lead DIP, See Diag. 299**

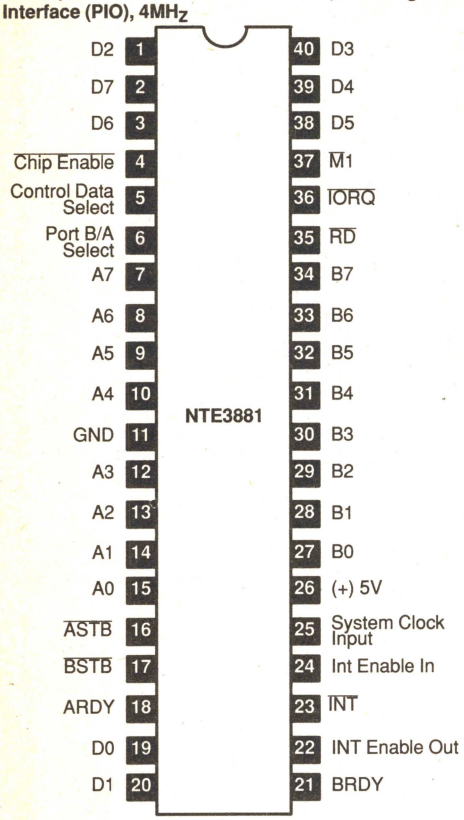

NMOS, Counter Timer Control (CTC) — **40–Lead DIP, See Diag. 299**

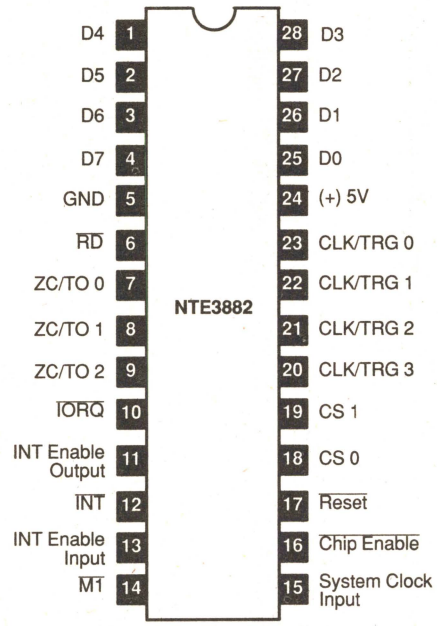

NMOS, 8 Bit Microprocessor (MPU), 1MHz — **40–Lead DIP, See Diag. 299**

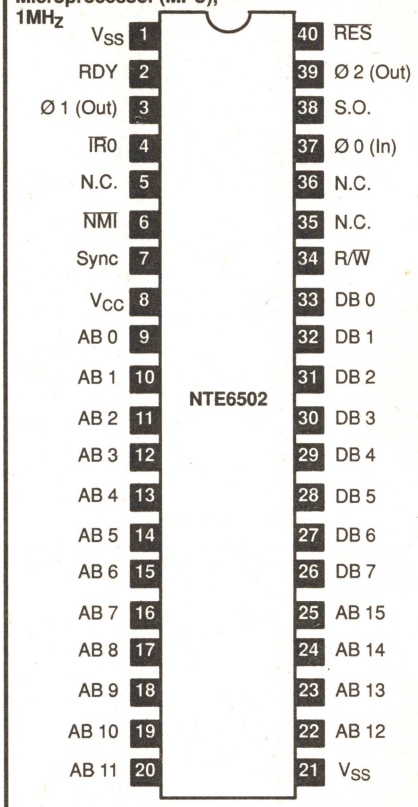

NMOS, 8 Bit Microprocessor (MPU) w/On Chip Clock OSC — **28–Lead DIP, See Diag. 253**

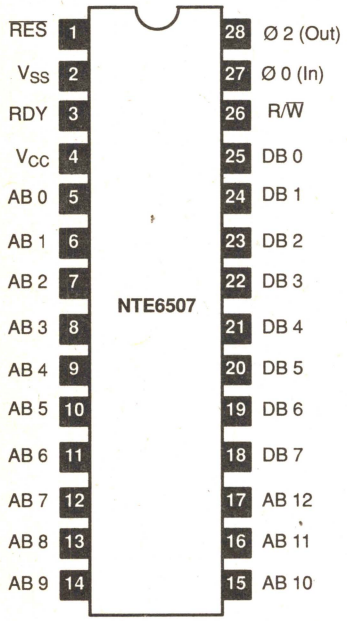

CMOS, 1K Static RAM (SRAM), 300ns — **16–Lead DIP, See Diag. 249**

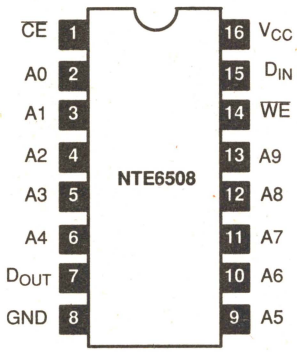

NMOS, 1K Static RAM (SRAM), I/O, Timer Array — **40–Lead DIP, See Diag. 299**

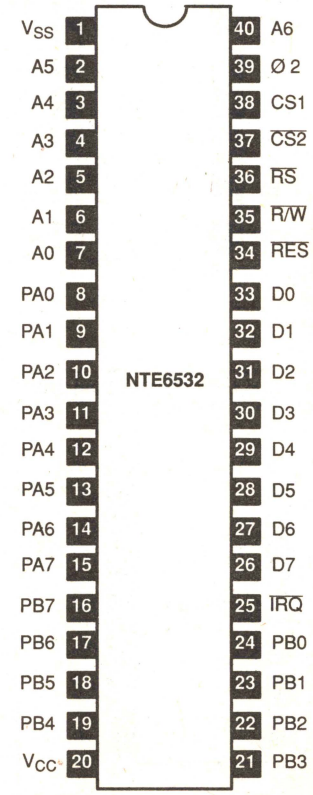

See Diagrams, beginning on Page 1–320

(Includes Peripherals)

NMOS, 8 Bit Microprocessor (MPU), 1MHz — **40–Lead DIP, See Diag. 299**

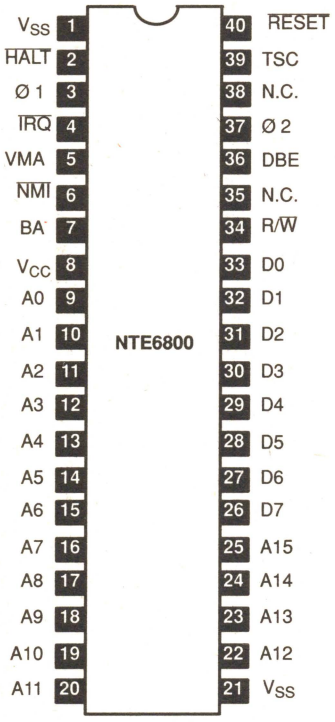

NMOS, 8 Bit Microprocessor (MPU) w/Clock 128 Bytes RAM — **40–Lead DIP, See Diag. 299**

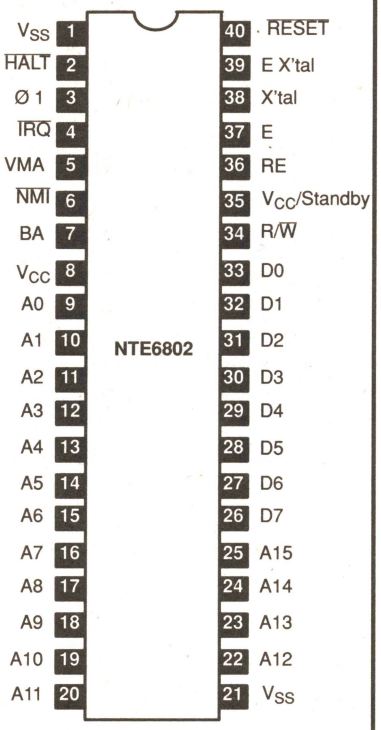

NMOS, 8 Bit Microprocessor (MPU) — **40–Lead DIP, See Diag. 299**

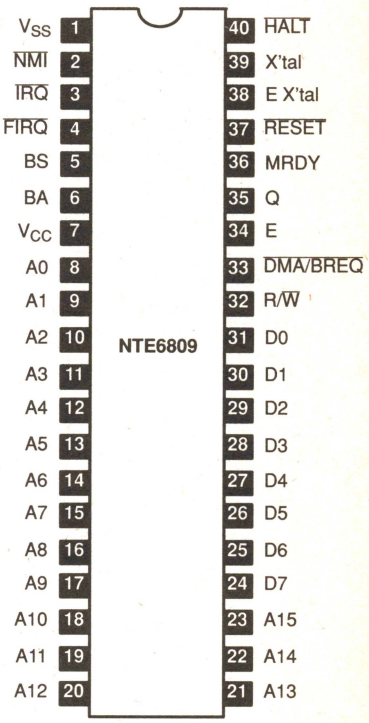

NMOS, 8 Bit Microprocessor (MPU) — **40–Lead DIP, See Diag. 299**

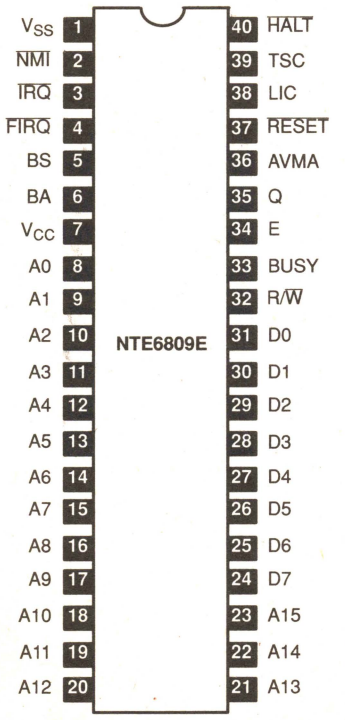

NMOS, 1K Static RAM (SRAM), 450ns — **24–Lead DIP, See Diag. 252**

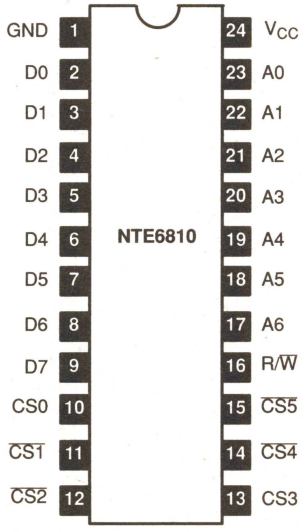

NMOS, Peripheral Interface Adapter (PIA) for NTE6800 — **40–Lead DIP, See Diag. 299**

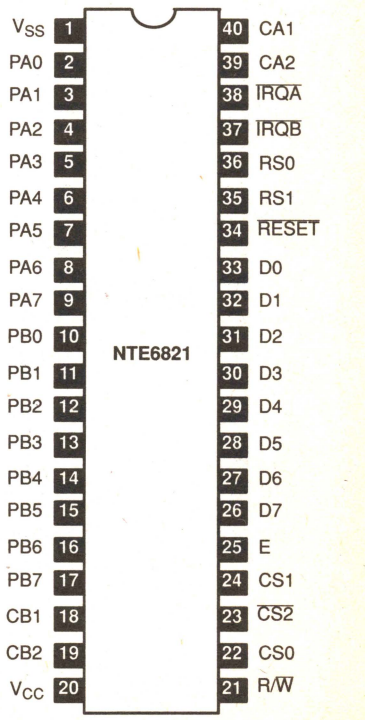

See Diagrams, beginning on Page 1–320

MICROPROCESSOR & MEMORY CIRCUITS

(Includes Peripherals)

NMOS, Asynchronous Communications Interface Adapter (ACIA) — **24–Lead DIP, See Diag. 252**

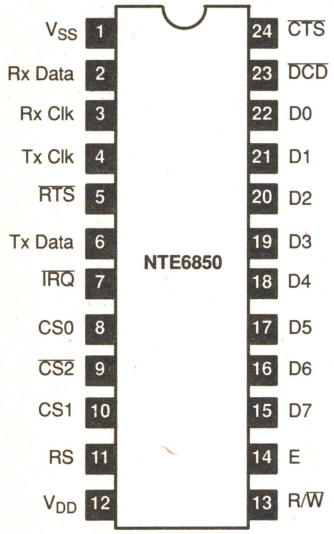

NMOS, Two–Phase Generator/Driver for NTE6800 — **16–Lead DIP, See Diag. 249**

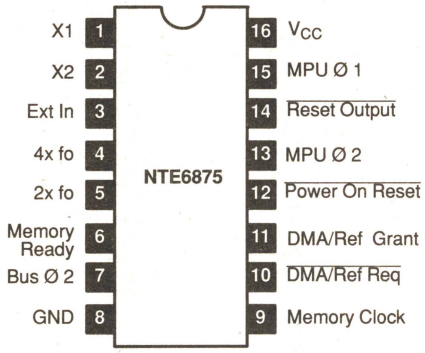

NMOS, 8 Bit Microprocessor (MPU), 2MHz — **40–Lead DIP, See Diag. 299**

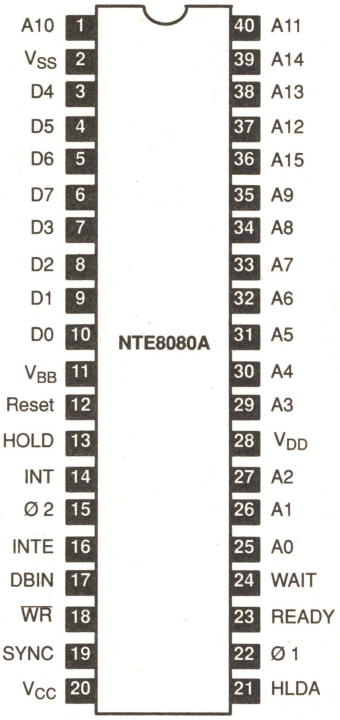

Schottky, 8 Bit Input/Output Port — **24–Lead DIP, See Diag. 252**

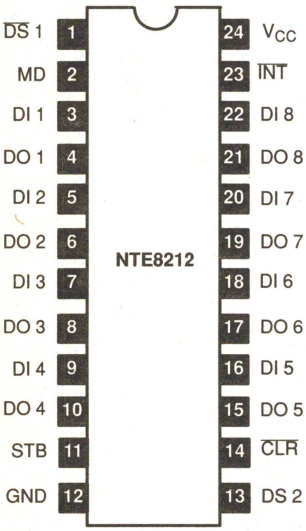

Schottky, 8 Level Priority Interrupt Controller Unit (PICU) — **24–Lead DIP, See Diag. 252**

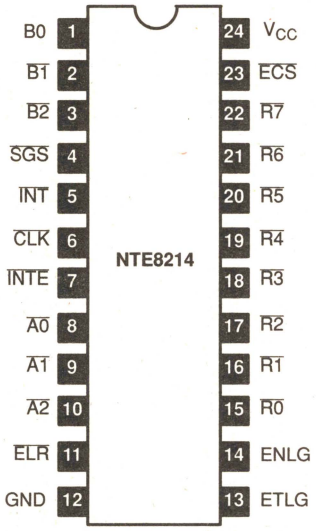

Schottky, 4 Bit Parallel Bidirectional Bus Driver — **16–Lead DIP, See Diag. 249**

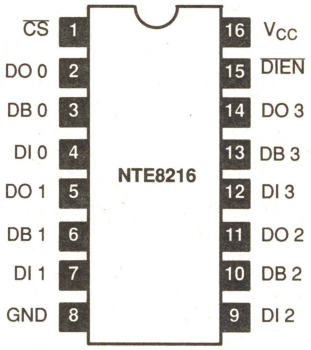

See Diagrams, beginning on Page 1–320

(Includes Peripherals)

Schottky, Clock Generator and Driver for 8080A Processors — 16–Lead DIP, See Diag. 249

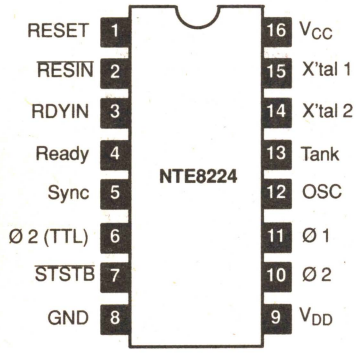

Schottky, Single Chip System Controller for 8080A Processors — 28–Lead DIP, See Diag. 253

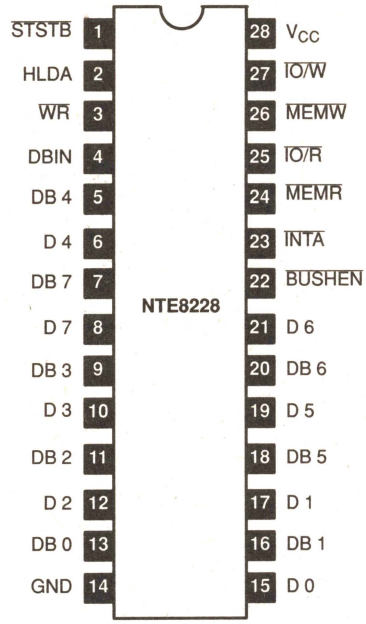

NMOS, Programmable Peripheral Interface — 40–Lead DIP, See Diag. 299

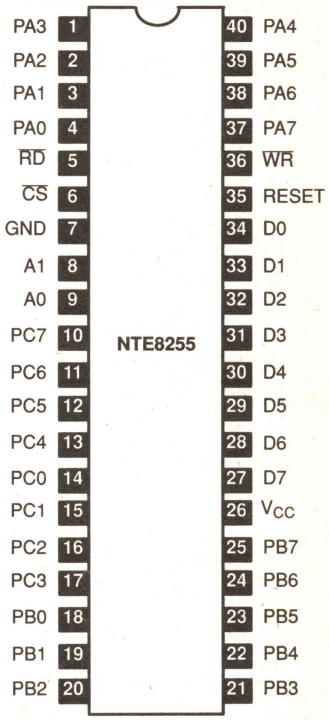

Dual, 8 Bit Shift Register — 16–Lead DIP, See Diag. 249

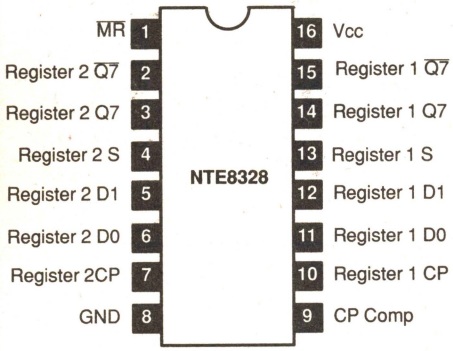

NMOS, 128K EPROM, UV, 250ns — 28–Lead DIP, See Diag. 446

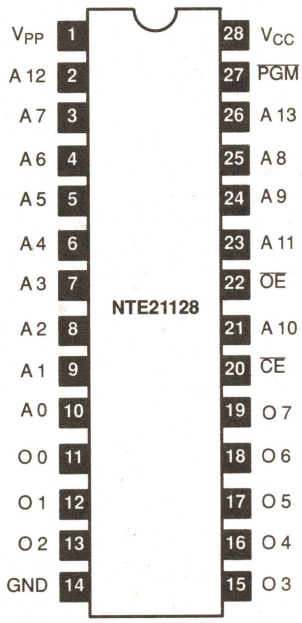

NMOS, 256K Dynamic RAM (DRAM), 150ns — 16–Lead DIP, See Diag. 248

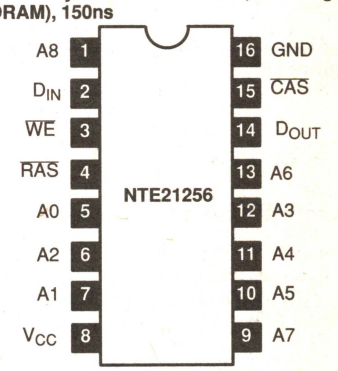

NMOS, 1K Static RAM (SRAM), 450ns — 22–Lead DIP, See Diag. 337

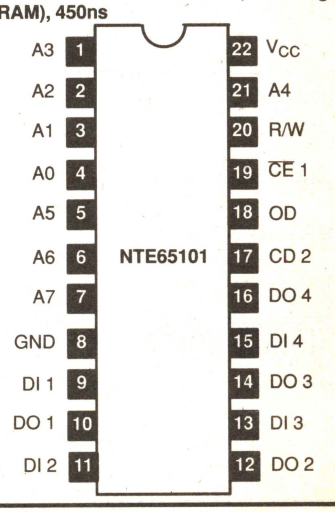

See Diagrams, beginning on Page 1–320

DIMENSIONAL OUTLINE DRAWINGS

Diagram 247

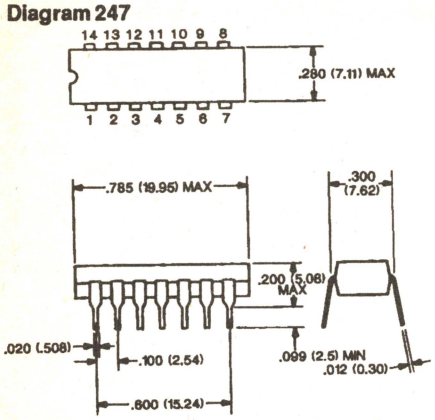

Diagram 248

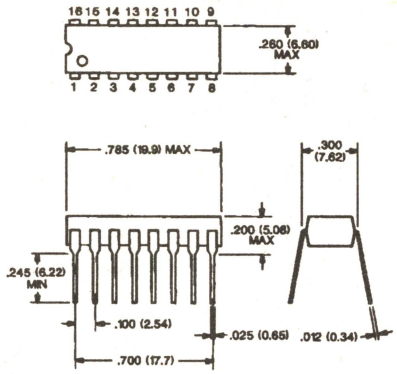

Diagram 249

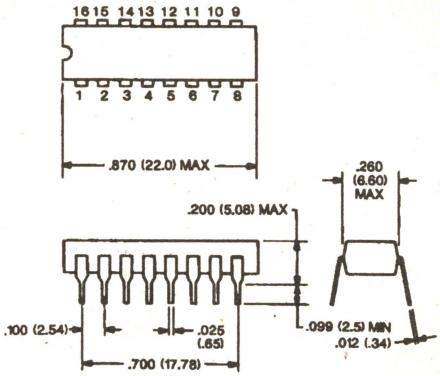

Diagram 252

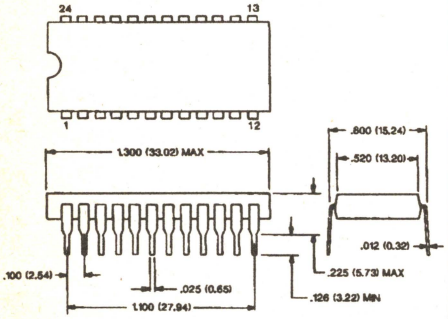

Diagram 253

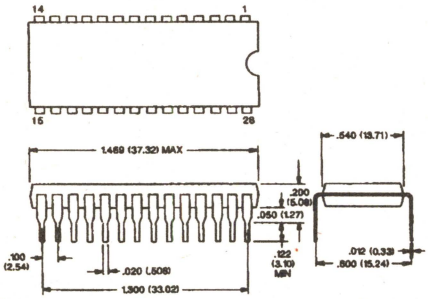

Diagram 293

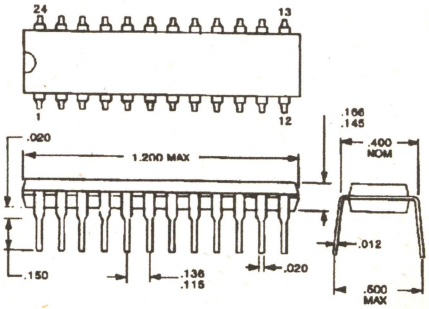

Diagram 294

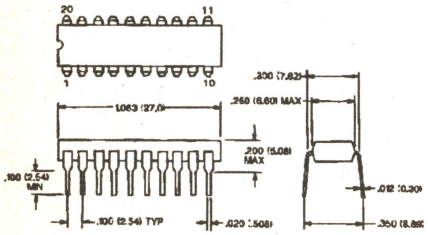

Diagram 297

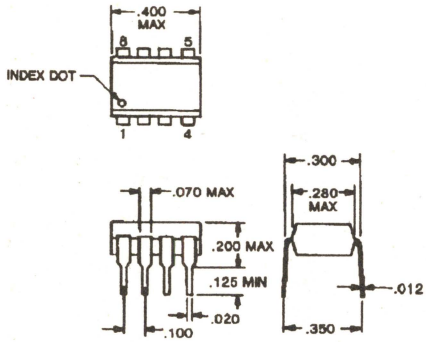

Diagram 298

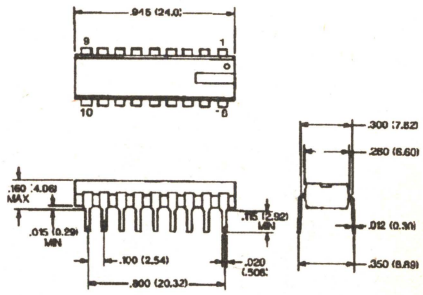

Diagram 299

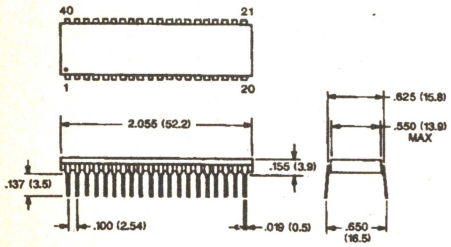

Diagram 300

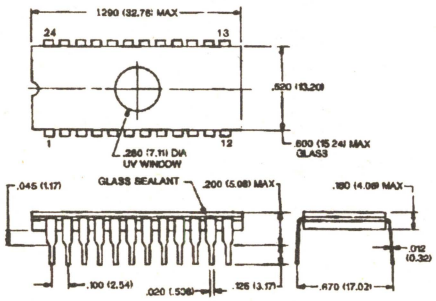

Diagram 336

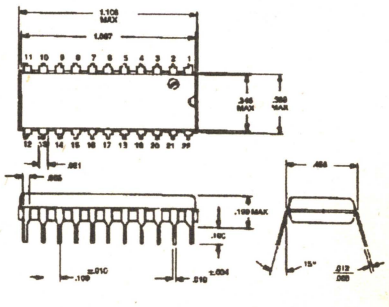

DIMENSIONAL OUTLINE DRAWINGS

Diagram 337

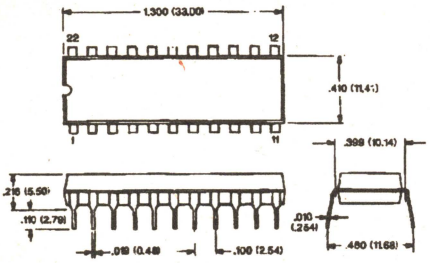

Diagram 339

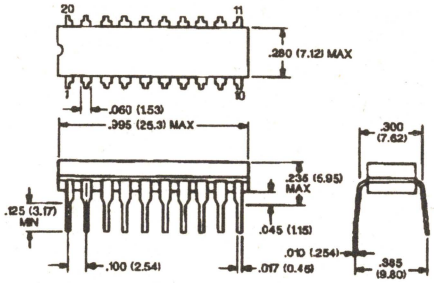

Diagram 340

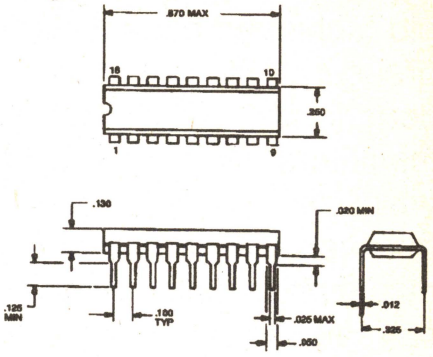

Diagram 341

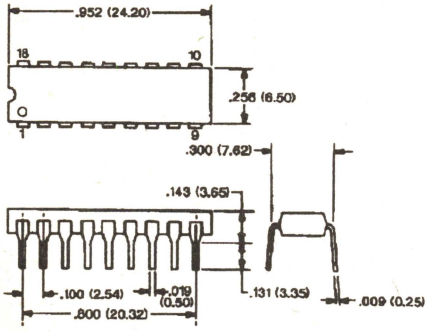

Diagram 343

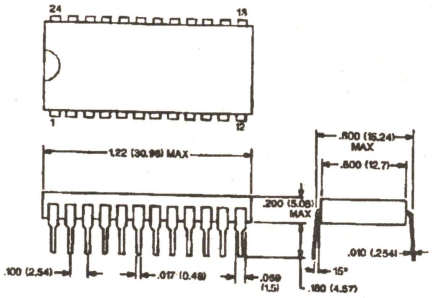

Diagram 445

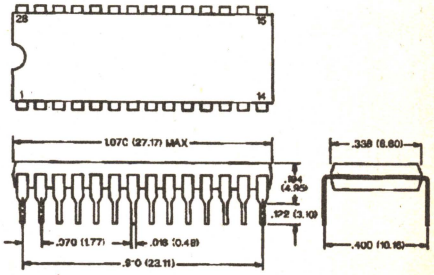

Diagram 446

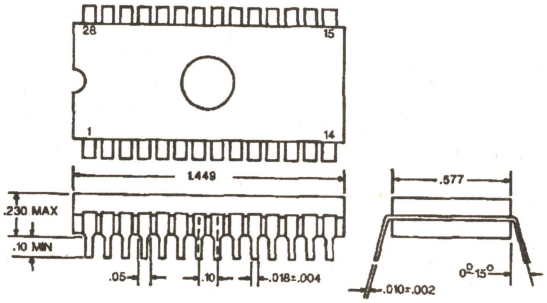

THERMO PADS

NTE's THERMO–PADS do away with the old fashioned mica wafer and conductive grease method of mounting power semiconductors. These thermally conductive insulators offer low heat transfer resistance while still providing high electrical isolation between the parts of the assembly. The elastomeric material combines the electrical isolation of rigid insulators with the ability to conform to rough surfaces and reduce contact resistance in much the same manner as thermal greases. Proper selection and use of these THERMO–PADS results in a securely–mounted power semiconductor and minimum resistance to the heat transfer between it and the heat sink.

INSTALLED COST PER THOUSAND UNITS

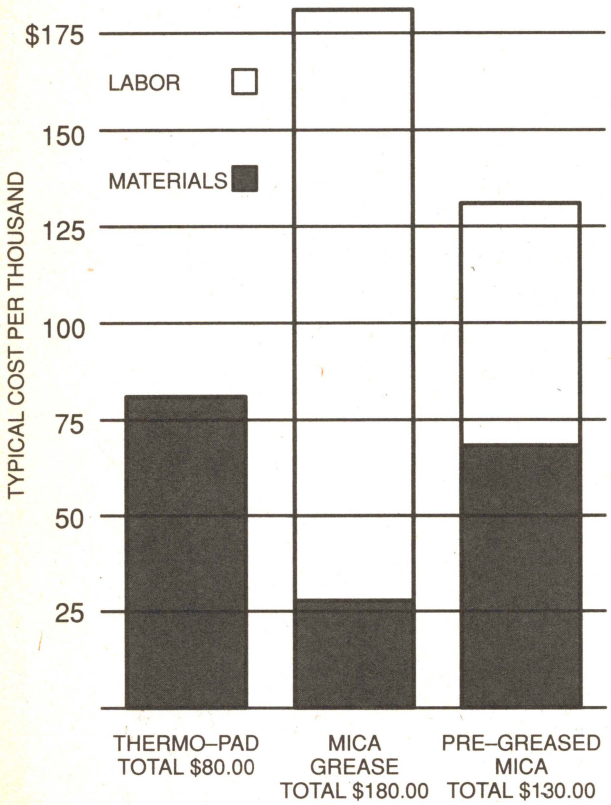

TYPICAL PROPERTIES

PROPERTY	0.009 INCH THICKNESS	TEST METHOD
Color	Gray	Visual
Breaking Strength Lbs./Inch	100	ASTM D 1458
Elongation, Percent	4	ASTM D 412
Volume Resistance Ohm Meter Minimum		
Normal	1.0×10^{13}	
Moist	1.5×10^{10}	ASTM D 257
Breakdown Voltage, Minimum		
Normal	5000	
Moist	2500	ASTM D 149
Dielectric Constant 1000 Cups (H_Z)	5.5	ASTM D 150
Continuous Use Temperature °C	–60° to +180°	–
Thermal Conductance $\frac{W}{m–k}$	0.7	–
Thermal Vacuum Weight Loss Percent (TML) Maximun		
as Manufactured	0.40	NASA
Post Cure 24 Hrs @ 400°F	0.25	SP–R–0022A
Volatile Condensable Material, Percent, Maximun (CVCM)		
as Manufactured	0.11	NASA
Post Cure 24 Hrs @ 400°F	0.07	SP–R–0022A
Hardness, Shore A	85	ASTM D 2240
Specific Gravity	2.0 – 2.1	–
Thickness (Expressed in Inches)	$0.009^{+0.002}_{-0.001}$	–
Thermal Resistance (TO3 Transistor) °C/Watt	0.50	–

DIMENSIONAL OUTLINE DRAWINGS

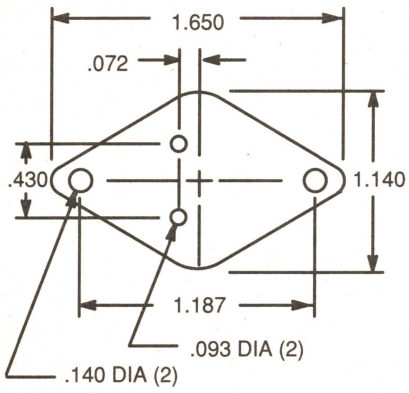

TO3 Style
TP0001

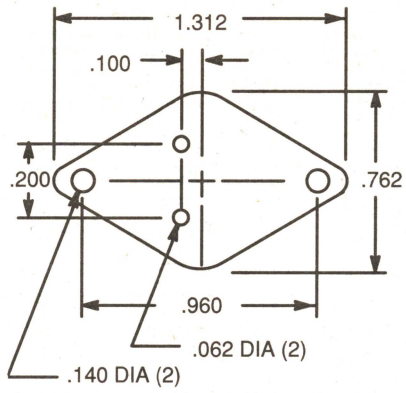

TO66 Style
TP0002

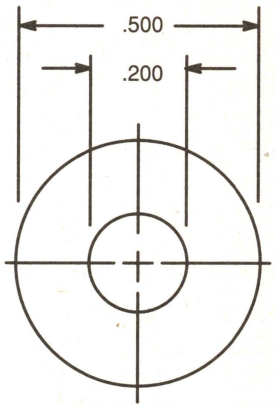

DO4 Style
TP0003

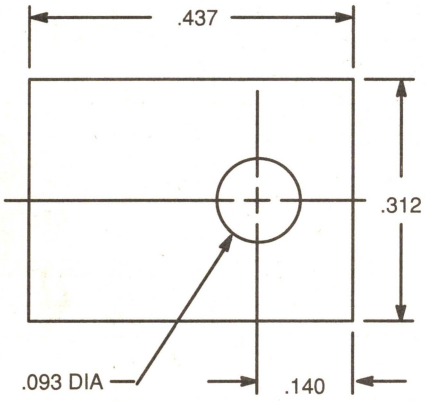

TO126 Style
TP0004

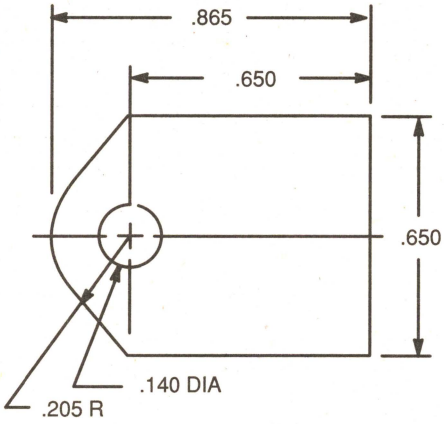

TIP36 Style
TP0005

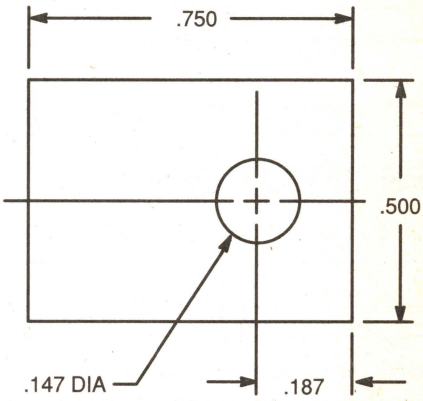

TO220 Style
TP0006

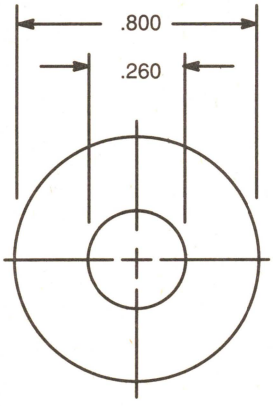

DO5 Style
TP0007

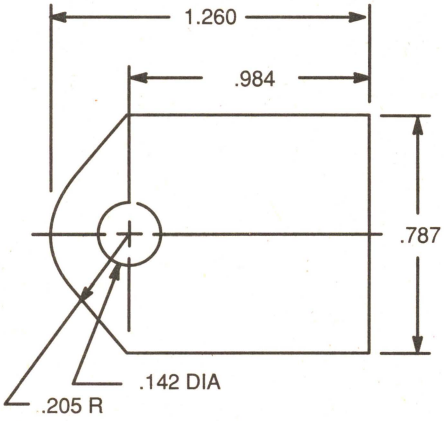

TO3P Style
TP0008

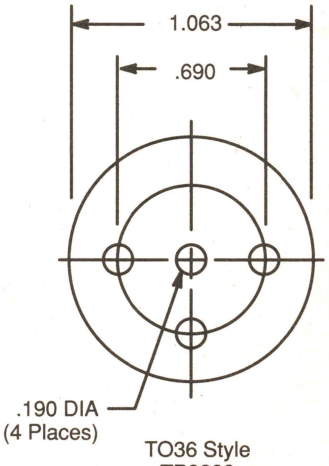

TO36 Style
TP0009

1/8 WATT METAL

Value in Ohms	NTE Stock Number	Value in Ohms	NTE Stock Number	Value in Ohms	NTE Stock Number	Value in Ohms	NTE Stock Number	Value in Ohms	NTE Stock Number	Value in Ohms	NTE Stock Number	Value in Ohms	NTE Stock Number
2.2	EW2D2	15	EW015	100	EW110	680	EW168	4.7K	EW247	33K	EW333	220K	EW422
2.4	EW2D4	16	EW016	110	EW111	750	EW175	5.1K	EW251	36K	EW336	240K	EW424
2.7	EW2D7	18	EW018	120	EW112	820	EW182	5.6K	EW256	39K	EW339	270K	EW427
3.0	EW3D0	20	EW020	130	EW113	910	EW191	6.2K	EW262	43K	EW343	300K	EW430
3.3	EW3D3	22	EW022	150	EW115	1K	EW210	6.8K	EW268	47K	EW347	330K	EW433
3.6	EW3D6	24	EW024	160	EW116	1.1K	EW211	7.5K	EW275	51K	EW351	360K	EW436
3.9	EW3D9	27	EW027	180	EW118	1.2K	EW212	8.2K	EW282	56K	EW356	390K	EW439
4.3	EW4D3	30	EW030	200	EW120	1.3K	EW213	9.1K	EW291	62K	EW362	430K	EW43
4.7	EW4D7	33	EW033	220	EW122	1.5K	EW215	10K	EW310	68K	EW368	470K	EW447
5.1	EW5D1	36	EW036	240	EW124	1.6K	EW216	11K	EW311	75K	EW375	510K	EW451
5.6	EW5D6	39	EW039	270	EW127	1.8K	EW218	12K	EW312	82K	EW382	560K	EW456
6.2	EW6D2	43	EW043	300	EW130	2K	EW220	13K	EW313	91K	EW391	620K	EW462
6.8	EW6D8	47	EW047	330	EW133	2.2K	EW222	15K	EW315	100K	EW410	680K	EW468
7.5	EW7D5	51	EW051	360	EW136	2.4K	EW224	16K	EW316	110K	EW411	750K	EW475
8.2	EW8D2	56	EW056	390	EW139	2.7K	EW227	18K	EW318	120K	EW412	820K	EW482
9.1	EW9D1	62	EW062	430	EW143	3K	EW230	20K	EW320	130K	EW413	910K	EW491
10	EW010	68	EW068	470	EW147	3.3K	EW233	22K	EW322	150K	EW415	1M	EW510
11	EW011	75	EW075	510	EW151	3.6K	EW236	24K	EW324	160K	EW416		
12	EW012	82	EW082	560	EW156	3.9K	EW239	27K	EW327	180K	EW418		
13	EW013	91	EW091	620	EW162	4.3K	EW243	30K	EW330	200K	EW420		

SPECIFICATIONS

Electrical Characteristics @ 70°C

NTE Number	Quantity Per Package	Resistance Range (Ohms)	Tolerance (%)	Voltage (Volts)	Temperature Coefficient (PPM/°C)
EW2D2 thru EW510	6	2.2 to 1M	2	150	200

Mechanical* (Typical, inches/mm)

NTE Number	Body Length (L)	Body Diameter (D)	Lead Diameter (d)	Lead Length (LL)
EW2D2 thru EW510	0.146 (3.7)	0.063 (1.6)	0.016 (0.4)	1.180 (30.0)

* These dimensions are for reference only, please consult the factory for actual size.

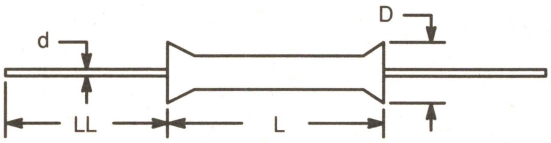

FLAMEPROOF RESISTORS

1/4 WATT METAL

Value in Ohms	NTE Stock Number	Value in Ohms	NTE Stock Number	Value in Ohms	NTE Stock Number	Value in Ohms	NTE Stock Number	Value in Ohms	NTE Stock Number	Value in Ohms	NTE Stock Number	Value in Ohms	NTE Stock Number
1.0	QW1D0	12	QW012	150	QW115	1.8K	QW218	22K	QW322	270K	QW427	3.3M	QW533
1.1	QW1D1	13	QW013	160	QW116	2K	QW220	24K	QW324	300K	QW430	3.6M	QW536
1.2	QW1D2	15	QW015	180	QW118	2.2K	QW222	27K	QW327	330K	QW433	3.9M	QW539
1.3	QW1D3	16	QW016	200	QW120	2.4K	QW224	30K	QW330	360K	QW436	4.3M	QW543
1.5	QW1D5	18	QW018	220	QW122	2.7K	QW227	33K	QW333	390K	QW439	4.7M	QW547
1.6	QW1D6	20	QW020	240	QW124	3K	QW230	36K	QW336	430K	QW443	5.1M	QW551
1.8	QW1D8	22	QW022	270	QW127	3.3K	QW233	39K	QW339	470K	QW447	5.6M	QW556
2.0	QW2D0	24	QW024	300	QW130	3.6K	QW236	43K	QW343	510K	QW451	6.2M	QW562
2.2	QW2D2	27	QW027	330	QW133	3.9K	QW239	47K	QW347	560K	QW456	6.8M	QW568
2.4	QW2D4	30	QW030	360	QW136	4.3K	QW243	51K	QW351	620K	QW462	7.5M	QW575
2.7	QW2D7	33	QW033	390	QW139	4.7K	QW247	56K	QW356	680K	QW468	8.2M	QW582
3.0	QW3D0	36	QW 036	430	QW143	5.1K	QW251	62K	QW362	750K	QW475	9.1M	QW591
3.3	QW3D3	39	QW039	470	QW147	5.6K	QW256	68K	QW368	820K	QW482	10M	QW610
3.6	QW3D6	43	QW043	510	QW151	6.2K	QW262	75K	QW375	910K	QW491	11M	QW611
3.9	QW3D9	47	QW047	560	QW156	6.8K	QW268	82K	QW382	1M	QW510	12M	QW612
4.3	QW4D3	51	QW051	620	QW162	7.5K	QW275	91K	QW391	1.1M	QW511	13M	QW613
4.7	QW4D7	56	QW056	680	QW168	8.2K	QW282	100K	QW410	1.2M	QW512	15M	QW615
5.1	QW5D1	62	QW062	750	QW175	9.1K	QW291	110K	QW411	1.3M	QW513	16M	QW616
5.6	QW5D6	68	QW068	820	QW182	10K	QW310	120K	QW412	1.5M	QW515	18M	QW618
6.2	QW6D2	75	QW075	910	QW191	11K	QW311	130K	QW413	1.6M	QW516	20M	QW620
6.8	QW6D8	82	QW082	1K	QW210	12K	QW312	150K	QW415	1.8M	QW518	22M	QW622
7.5	QW7D5	91	QW091	1.1K	QW211	13K	QW313	160K	QW416	2.0M	QW520		
8.2	QW8D2	100	QW110	1.2K	QW212	15K	QW315	180K	QW418	2.2M	QW522		
9.1	QW9D1	110	QW111	1.3K	QW213	16K	QW316	200K	QW420	2.4M	QW524		
10	QW010	120	QW112	1.5K	QW215	18K	QW318	220K	QW422	2.7M	QW527		
11	QW011	130	QW113	1.6K	QW216	20K	QW320	240K	QW424	3.0M	QW530		

SPECIFICATIONS

Electrical Characteristics @ 70°C

NTE Number	Quantity Per Package	Resistance Range (Ohms)	Tolerance (%)	Voltage (Volts)	Temperature Coefficient (PPM/°C)
QW1D0 thru QW9D1	2	1.0 to 9.1	5	250	100
QW010 thru QW430	4	10 to 300K	2	250	100
QW433 thru QW622	2	330K to 22M	2	250	200

Mechanical* (Typical, inches/mm)

NTE Number	Body Length (L)	Body Diameter (D)	Lead Diameter (d)	Lead Length (LL)
QW1D0 thru QW9D1	0.250 (6.5)	0.091 (2.3)	0.025 (0.63)	1.06 (27.0)
QW010 thru QW430	0.235 (5.97)	0.091 (2.3)	0.025 (0.63)	1.50 (38.1)
QW433 thru QW622	0.250 (6.5)	0.091 (2.3)	0.025 (0.63)	1.18 (30.0)

* These dimensions are for reference only, please consult the factory for actual size.

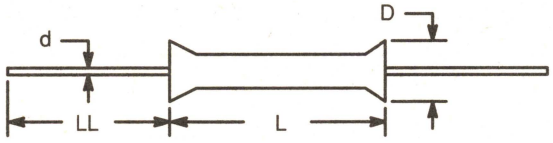

FLAMEPROOF RESISTORS

1/2 WATT METAL

Value in Ohms	NTE Stock Number	Value in Ohms	NTE Stock Number	Value in Ohms	NTE Stock Number	Value in Ohms	NTE Stock Number	Value in Ohms	NTE Stock Number	Value in Ohms	NTE Stock Number	Value in Ohms	NTE Stock Number
0.10	HWD10	1.6	HW1D6	27	HW027	430	HW143	6.8K	HW268	110K	HW411	1.6M	HW513
0.11	HWD11	1.8	HW1D8	30	HW030	470	HW147	7.5K	HW275	120K	HW412	1.8M	HW515
0.12	HWD12	2.0	HW2D0	33	HW033	510	HW151	8.2K	HW282	130K	HW413	2M	HW520
0.13	HWD13	2.2	HW2D2	36	HW036	560	HW156	9.1K	HW291	150K	HW415	2.2M	HW522
0.15	HWD15	2.4	HW2D4	39	HW039	620	HW162	10K	HW310	160K	HW416	2.4M	HW524
0.16	HWD16	2.7	HW2D7	43	HW043	680	HW168	11K	HW311	180K	HW418	2.7M	HW527
0.18	HWD18	3.0	HW3D0	47	HW047	750	HW175	12K	HW312	200K	HW420	3M	HW530
0.20	HWD20	3.3	HW3D3	51	HW051	820	HW182	13K	HW313	220K	HW422	3.3M	HW533
0.22	HWD22	3.6	HW3D6	56	HW051	910	HW191	15K	HW315	240K	HW424	3.6M	HW536
0.24	HWD24	3.9	HW3D9	62	HW056	1K	HW210	16K	HW316	270K	HW427	3.9M	HW539
0.27	HWD27	4.3	HW4D3	68	HW068	1.1K	HW211	18K	HW318	300K	HW430	4.3M	HW543
0.30	HWD30	4.7	HW4D7	75	HW075	1.2K	HW212	20K	HW320	330K	HW433	4.7M	HW547
0.33	HWD33	5.1	HW5D1	82	HW082	1.3K	HW213	22K	HW322	360K	HW436	5.1M	HW551
0.36	HWD36	5.6	HW5D6	91	HW091	1.5K	HW215	24K	HW324	390K	HW439	5.6M	HW556
0.39	HWD39	6.2	HW6D2	100	HW110	1.6K	HW216	27K	HW327	430K	HW443	6.2M	HW562
0.43	HWD43	6.8	HW6D8	110	HW111	1.8K	HW218	30K	HW330	470K	HW436	6.8M	HW568
0.47	HWD47	7.5	HW7D5	120	HW112	2K	HW220	33K	HW333	510K	HW439	7.5M	HW575
0.51	HWD51	8.2	HW8D2	130	HW113	2.2K	HW222	36K	HW336	560K	HW443	8.2M	HW582
0.56	HWD56	9.1	HW9D1	150	HW115	2.4K	HW224	39K	HW339	620K	HW447	9.1M	HW591
0.62	HWD62	10	HW010	160	HW116	2.7K	HW227	43K	HW343	680K	HW451	10M	HW610
0.68	HWD68	11	HW011	180	HW118	3K	HW230	47K	HW347	750K	HW456	11M	HW611
0.75	HWD75	12	HW012	200	HW120	3.3K	HW233	51K	HW351	820K	HW462	12M	HW612
0.82	HWD82	13	HW013	220	HW122	3.6K	HW236	56K	HW356	910K	HW468	13M	HW613
0.91	HWD91	15	HW015	240	HW124	3.9K	HW239	62K	HW362	1M	HW475	15M	HW615
1.0	HW1D0	16	HW016	270	HW127	4.3K	HW243	68K	HW368	1.1M	HW482	16M	HW616
1.1	HW1D1	18	HW018	300	HW130	4.7K	HW247	75K	HW375	1.2M	HW491	18M	HW618
1.2	HW1D2	20	HW020	330	HW133	5.1K	HW251	82K	HW382	1.3M	HW510	20M	HW620
1.3	HW1D3	22	HW022	360	HW136	5.6K	HW256	91K	HW391	1.5M	HW511	22M	HW622
1.5	HW1D5	24	HW024	390	HW139	6.2K	HW262	100K	HW410				

SPECIFICATIONS

Electrical Characteristics @ 70°C

NTE Number	Quantity Per Package	Resistance Range (Ohms)	Tolerance (%)	Voltage (Volts)	Temperature Coefficient (PPM/°C)
HWD10 thru HW9D1	2	0.20 to 9.1	5	300	100
HW010 thru HW510	6	10 to 1M	2	350	100
HW511 thru HW622	2	1.1M to 22M	2	350	200

Mechanical* (Typical, inches/mm)

NTE Number	Body Length (L)	Body Diameter (D)	Lead Diameter (d)	Lead Length (LL)
HWD10 thru HW9D1	0.375 (9.5)	0.138 (3.5)	0.027 (0.7)	1.02 (26)
HW010 thru HW510	0.355 (9.02)	0.148 (3.76)	0.032 (0.81)	1.5 (38.1)
HW511 thru HW622	0.375 (9.5)	0.138 (3.5)	0.032 (0.81)	1.18 (30)

* These dimensions are for reference only, please consult the factory for actual size.

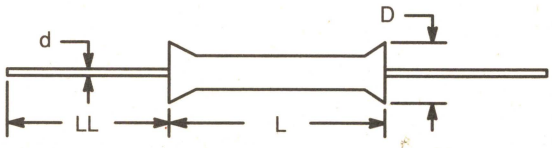

FLAMEPROOF RESISTORS

1 WATT METAL

Value in Ohms	NTE Stock Number	Value in Ohms	NTE Stock Number	Value in Ohms	NTE Stock Number	Value in Ohms	NTE Stock Number	Value in Ohms	NTE Stock Number	Value in Ohms	NTE Stock Number	Value in Ohms	NTE Stock Number
0.10	1WD10	4.3	1W4D3	56	1W056	750	1W175	11K	1W311	150K	1W415	2M	1W520
0.12	1WD12	4.7	1W4D7	62	1W062	820	1W182	12K	1W312	160K	1W416	2.2M	1W522
o.15	1WD15	5.1	1W5D1	68	1W068	910	1W191	13K	1W313	180K	1W418	2.4M	1W524
0.18	1WD18	5.6	1W5D6	75	1W075	1K	1W210	15K	1W315	200K	1W420	2.7M	1W527
0.22	1WD22	6.2	1W6D2	82	1W082	1.1K	1W211	16K	1W316	220K	1W422	3M	1W530
0.27	1WD27	6.8	1W6D8	91	1W091	1.2K	1W212	18K	1W318	240K	1W424	3.3M	1W533
0.33	1WD33	7.5	1W7D5	100	1W110	1.3K	1W213	20K	1W320	270K	1W427	3.6M	1W536
0.39	1WD39	8.2	1W8D2	110	1W111	1.5K	1W215	22K	1W322	300K	1W430	3.9M	1W539
0.47	1WD47	9.1	1W9D1	120	1W112	1.6K	1W216	24K	1W324	330K	1W433	4.3M	1W543
0.56	1WD56	10	1W010	130	1W113	1.8K	1W218	27K	1W327	360K	1W436	4.7M	1W547
0.68	1WD68	11	1W011	150	1W115	2K	1W220	30K	1W330	390K	1W439	5.1M	1W551
0.82	1WD82	12	1W012	160	1W116	2.2K	1W222	33K	1W333	430K	1W443	5.6M.	1W556
1.0	1W1D0	13	1W013	180	1W118	2.7K	1W227	36K	1W336	470K	1W447	6.2M	1W562
1.1	1W1D1	15	1W015	200	1W120	3K	1W230	39K	1W339	510K	1W451	6.8M	1W568
1.2	1W1D2	16	1W016	220	1W122	3.3K	1W233	43K	1W343	560K	1W456	7.5M	1W575
1.3	1W1D3	18	1W018	240	1W124	3.6K	1W236	47K	1W347	620K	1W462	8.2M	1W582
1.5	1W1D5	20	1W020	270	1W127	3.9K	1W239	51K	1W351	68K	1W468	9.1M	1W591
1.6	1W1D6	22	1W022	300	1W130	4.3K	1W243	56K	1W356	750K	1W475	10M	1W610
1.8	1W1D8	24	1W024	330	1W133	4.7K	1W247	62K	1W362	820K	1W482	11M	1W611
2.0	1W2D0	27	1W027	360	1W136	5.1K	1W251	68K	1W368	910K	1W491	12M	1W612
2.2	1W2D2	30	1W030	390	1W139	5.6K	1W256	75K	1W375	1M	1W510	13M	1W613
2.4	1W2D4	33	1W033	430	1W143	6.2K	1W262	82K	1W382	1.1M	1W511	15M	1W615
2.7	1W2D7	36	1W036	470	1W147	6.8K	1W268	91K	1W391	1.2M	1W512	16M	1W616
3.0	1W3D0	39	1W039	510	1W151	7.5K	1W275	100K	1W410	1.3M	1W513	18M	1W618
3.3	1W3D3	43	1W043	560	1W156	8.2K	1W282	110K	1W411	1.5M	1W515	20M	1W620
3.6	1W3D6	47	1W047	620	1W162	9.1K	1W291	120K	1W412	1.6M	1W516	22M	1W622
3.9	1W3D9	51	1W051	680	1W168	10K	1W310	130K	1W413	1.8M	1W518		

SPECIFICATIONS

Electrical Characteristics @ 70°C

NTE Number	Quantity Per Package	Resistance Range (Ohms)	Tolerance (%)	Voltage (Volts)	Temperature Coefficient (PPM/°C)
1WD10 to1W9D1	2	0.10 to 9.1	5	350	200
1W010 to 1W510	4	10 to 1M	2	500	200
1W511 to 1W622	2	1.1M to 22M	2	350	200

Mechanical* (Typical, inches/mm)

NTE Number	Body Length (L)	Body Diameter (D)	Lead Diameter (d)	Lead Length (LL)
1WD10 to 1W9D1	0.425 (10.8)	0.155 (3.9)	0.027 (0.7)	1.375 (35)
1W010 to 1W510	0.440 (11.8)	0.157 (4.0)	0.032 (0.83)	1.18 (30)
1W511 to 1W622	0.425 (10.8)	0.155 (3.9)	0.027 (0.7)	1.375 (35)

* These dimensions are for reference only, please consult the factory for actual size.

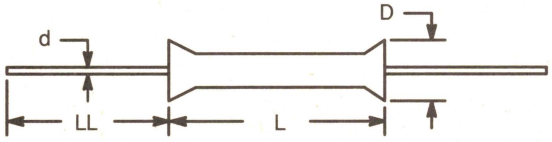

2 WATT METAL

Value in Ohms	NTE Stock Number	Value in Ohms	NTE Stock Number	Value in Ohms	NTE Stock Number	Value in Ohms	NTE Stock Number	Value in Ohms	NTE Stock Number	Value in Ohms	NTE Stock Number	Value in Ohms	NTE Stock Number
0.10	2WD10	4.3	2W4D3	56	2W056	750	2W175	10K	2W310	130K	2W413	1.8M	2W518
0.12	2WD12	4.7	2W4D7	62	2W062	820	2W182	11K	2W311	150K	2W415	2M	2W520
0.15	2WD15	5.1	2W5D1	68	2W068	910	2W191	12K	2W312	160K	2W416	2.2M	2W522
0.18	2WD18	5.6	2W5D6	75	2W075	1K	2W210	13K	2W313	180K	2W418	2.4M	2W524
0.22	2WD22	6.2	2W6D2	82	2W082	1.1K	2W211	15K	2W315	200K	2W420	2.7M	2W527
0.27	2WD27	6.8	2W6D8	91	2W091	1.2K	2W212	16K	2W316	220K	2W422	3M	2W530
0.33	2WD33	7.5	2W7D5	100	2W110	1.3K	2W213	18K	2W318	240K	2W424	3.3M	2W533
0.39	2WD39	8.2	2W8D2	110	2W111	1.5K	2W215	20K	2W320	270K	2W427	3.6M	2W536
0.47	2WD47	9.1	2W9D1	120	2W112	1.6K	2W216	22K	2W322	300K	2W430	3.9M	2W539
0.56	2WD56	10	2W010	130	2W113	1.8K	2W218	24K	2W324	330K	2W433	4.3M	2W543
0.68	2WD68	11	2W011	150	2W115	2K	2W220	27K	2W327	360K	2W436	4.7M	2W547
0.82	2WD82	12	2W012	160	2W116	2.2K	2W222	30K	2W330	390K	2W439	5.1M	2W551
1.0	2W1D0	13	2W013	180	2W118	2.4K	2W224	33K	2W333	430K	2W443	5.6M	2W556
1.1	2W1D1	15	2W015	200	2W120	2.7K	2W227	36K	2W336	470K	2W447	6.2M	2W562
1.2	2W1D2	16	2W016	220	2W122	3K	2W230	39K	2W339	510K	2W451	6.8M	2W568
1.3	2W1D3	18	2W018	240	2W124	3.3K	2W233	43K	2W343	560K	2W456	7.5M	2W575
1.5	2W1D5	20	2W020	270	2W127	3.6K	2W236	47K	2W347	620K	2W462	8.2M	2W582
1.6	2W1D6	22	2W022	300	2W130	3.9K	2W239	51K	2W351	680K	2W468	9.1M	2W591
1.8	2W1D8	24	2W024	330	2W133	4.3K	2W243	56K	2W356	750K	2W475	10M	2W610
2.0	2W2D0	27	2W027	360	2W136	4.7K	2W247	62K	2W362	820K	2W482	11M	2W611
2.2	2W2D2	30	2W030	390	2W139	5.1K	2W251	68K	2W368	910K	2W491	12M	2W612
2.4	2W2D4	33	2W033	430	2W143	5.6K	2W256	75K	2W375	1M	2W510	13M	2W613
2.7	2W2D7	36	2W036	470	2W147	6.2K	2W262	82K	2W382	1.1M	2W511	15M	2W615
3.0	2W3D0	39	2W039	510	2W151	6.8K	2W268	91K	2W391	1.2M	2W512	16M	2W616
3.3	2W3D3	43	2W043	560	2W156	7.5K	2W275	100K	2W410	1.3M	2W513	18M	2W618
3.6	2W3D6	47	2W047	620	2W162	8.2K	2W282	110K	2W411	1.5M	2W515	20M	2W620
3.9	2W3D9	51	2W051	680	2W168	9.1K	2W291	120K	2W412	1.6M	2W516	22M	2W622

SPECIFICATIONS

Electrical Characteristics @ 70°C

NTE Number	Quantity Per Package	Resistance Range (Ohms)	Tolerance (%)	Voltage (Volts)	Temperature Coefficient (PPM/°C)
2WD10 to 2W9D1	2	0.10 to 9.1	5	500	200
2W010 to 2W622	2	10 to 22M	2	500	200

Mechanical* (Typical, inches/mm)

NTE Number	Body Length (L)	Body Diameter (D)	Lead Diameter (d)	Lead Length (LL)
2WD10 to 2W9D1	0.590 (15)	0.220 (5.6)	0.032 (.8)	1.5 (38)
2W010 to 2W622	0.610 (15.5)	0.220 (5.6)	0.032 (.8)	1.18 (30)

* These dimensions are for reference only, please consult the factory for actual size.

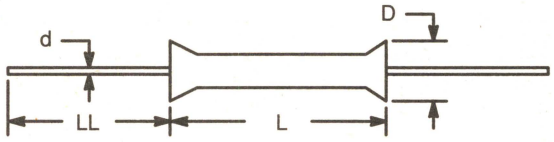

FLAMEPROOF RESISTORS

3 WATT METAL

Value in Ohms	NTE Stock Number	Value in Ohms	NTE Stock Number	Value in Ohms	NTE Stock Number	Value in Ohms	NTE Stock Number	Value in Ohms	NTE Stock Number	Value in Ohms	NTE Stock Number	Value in Ohms	NTE Stock Number
1.0	3W1D0	6.8	3W6D8	47	3W047	330	3W133	2.2K	3W222	15K	3W315	100K	3W410
1.1	3W1D1	7.5	3W7D5	51	3W051	360	3W136	2.4K	3W224	16K	3W316	110K	3W411
1.2	3W1D2	8.2	3W8D2	56	3W056	390	3W139	2.7K	3W227	18K	3W318	120K	3W412
1.3	3W1D3	9.1	3W9D1	62	3W062	430	3W143	3K	3W230	20K	3W320	130K	3W413
1.5	3W1D5	10	3W010	68	3W068	470	3W147	3.3K	3W233	22K	3W322	150K	3W415
1.6	3W1D6	11	3W011	75	3W075	510	3W151	3.6K	3W236	24K	3W324	160K	3W416
1.8	3W1D8	12	3W012	82	3W082	560	3W156	3.9K	3W239	27K	3W327	180K	3W418
2.0	3W2D0	13	3W013	91	3W091	620	3W162	4.3K	3W243	30K	3W330	200K	3W420
2.2	3W2D2	15	3W015	100	3W110	680	3W168	4.7K	3W247	33K	3W333	220K	3W422
2.4	3W2D4	16	3W016	110	3W111	750	3W175	5.1K	3W251	36K	3W336	240K	3W424
2.7	3W2D7	18	3W018	120	3W112	820	3W182	5.6K	3W256	39K	3W339	270K	3W427
3.0	3W3D0	20	3W020	130	3W113	910	3W191	6.2K	3W262	43K	3W343	300K	3W430
3.3	3W3D3	22	3W022	150	3W115	1K	3W210	6.8K	3W268	47K	3W347	330K	3W433
3.6	3W3D6	24	3W024	160	3W116	1.1K	3W211	7.5K	3W275	51K	3W351	360K	3W436
3.9	3W3D9	27	3W027	180	3W118	1.2K	3W212	8.2K	3W282	56K	3W356	390K	3W439
4.3	3W4D3	30	3W030	200	3W120	1.3K	3W213	9.1K	3W291	62K	3W362	430K	3W443
4.7	3W4D7	33	3W033	220	3W122	1.5K	3W215	10K	3W310	68K	3W368	470K	3W447
5.1	3W5D1	36	3W036	240	3W124	1.6K	3W216	11K	3W311	75K	3W375	510K	3W451
5.6	3W5D6	39	3W039	270	3W127	1.8K	3W218	12K	3W312	82K	3W382		
6.2	3W6D2	43	3W043	300	3W130	2K	3W220	13K	3W313	91K	3W391		

SPECIFICATIONS

Electrical Characteristics @ 70°C

NTE Number	Quantity Per Package	Resistance Range (Ohms)	Tolerance (%)	Voltage (Volts)	Temperature Coefficient (PPM/°C)
3W1D0 to 3W451	2	1.0 to 510K	5	750	200

Mechanical* (Typical, inches/mm)

NTE Number	Body Length (L)	Body Diameter (D)	Lead Diameter (d)	Lead Length (LL)
3W1D0 to 3W451	0.965 (24.5)	0.354 (9.0)	0.032 (0.83)	1.18 (30.0)

* These dimensions are for reference only, please consult the factory for actual size.

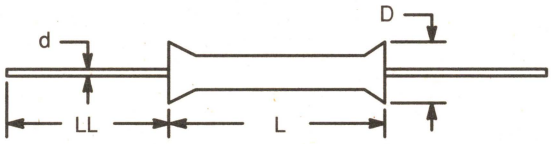

1 WATT FUSIBLE POWER OXIDE

Value in Ohms	NTE Stock Number	Value in Ohms	NTE Stock Number	Value in Ohms	NTE Stock Number	Value in Ohms	NTE Stock Number	Value in Ohms	NTE Stock Number	Value in Ohms	NTE Stock Number	Value in Ohms	NTE Stock Number
1.0	F1W1D0	2.0	F1W2D0	4.3	F1W4D3	8.2	F1W8D2	27	F1W027	100	F1W110	390	F1W139
1.1	F1W1D1	2.2	F1W2D2	4.7	F1W4D7	9.1	F1W9D1	33	F1W033	120	F1W112	470	F1W147
1.2	F1W1D2	2.4	F1W2D4	5.1	F1W5D1	10	F1W010	39	F1W039	150	F1W115	560	F1W156
1.3	F1W1D3	2.7	F1W2D7	5.6	F1W5D6	12	F1W012	47	F1W047	180	F1W118	680	F1W168
1.4	F1W1D4	3.0	F1W3D0	6.2	F1W6D2	15	F1W015	56	F1W056	220	F1W122	820	F1W182
1.5	F1W1D5	3.3	F1W3D3	6.8	F1W6D8	18	F1W018	68	F1W068	270	F1W127	1K	F1W210
1.6	F1W1D6	3.6	F1W3D6	7.5	F1W7D5	22	F1W022	82	F1W082	330	F1W133		
1.8	F1W1D8	3.9	F1W3D9										

SPECIFICATIONS

Electrical Characteristics @ 70°C

NTE Number	Quantity Per Package	Resistance Range (Ohms)	Tolerance (%)	Temperature Coefficient (PPM/°C)
F1W1D0 to F1W210	2	1.0 to 1K	5	200

Mechanical* (Typical, inches/mm)

NTE Number	Body Length (L)	Body Diameter (D)	Lead Diameter (d)	Lead Length (LL)
F1W1D0 to F1W210	0.375 (9.5)	0.135 (3.4)	0.027 (0.7)	1.3 (33)

* These dimensions are for reference only, please consult the factory for actual size.

2 WATT FUSIBLE POWER OXIDE

Value in Ohms	NTE Stock Number	Value in Ohms	NTE Stock Number	Value in Ohms	NTE Stock Number	Value in Ohms	NTE Stock Number	Value in Ohms	NTE Stock Number	Value in Ohms	NTE Stock Number	Value in Ohms	NTE Stock Number
1.0	F2W1D0	2.0	F2W2D0	3.9	F2W3D9	7.5	F2W7D5	22	F2W022	82	F2W082	330	F2W133
1.1	F2W1D1	2.2	F2W2D2	4.3	F2W4D3	8.2	F2W8D2	27	F2W027	100	F2W110	390	F2W139
1.2	F2W1D2	2.4	F2W2D4	4.7	F2W4D7	9.1	F2W9D1	33	F2W033	120	F2W112	470	F2W147
1.3	F2W1D3	2.7	F2W2D7	5.1	F2W5D1	10	F2W010	39	F2W039	150	F2W115	560	F2W156
1.4	F2W1D4	3.0	F2W3D0	5.6	F2W5D6	12	F2W012	47	F2W047	180	F2W118	680	F2W168
1.5	F2W1D5	3.3	F2W3D3	6.2	F2W6D2	15	F2W015	56	F2W056	220	F2W122	820	F2W182
1.6	F2W1D6	3.6	F2W3D6	6.8	F2W6D8	18	F2W018	68	F2W068	270	F2W127	1K	F2W210
1.8	F2W1D8												

SPECIFICATIONS

Electrical Characteristics @ 70°C

NTE Number	Quantity Per Package	Resistance Range (Ohms)	Tolerance (%)	Temperature Coefficient (PPM/°C)
F2W1D0 to F2W210	2	1.0 to 1K	5	200

Mechanical* (Typical, inches/mm)

NTE Number	Body Length (L)	Body Diameter (D)	Lead Diameter (d)	Lead Length (LL)
F2W1D0 to F2W210	0.450 (11.4)	0.162 (4.1)	0.027 (0.7)	1.3 (33)

* These dimensions are for reference only, please consult the factory for actual size.

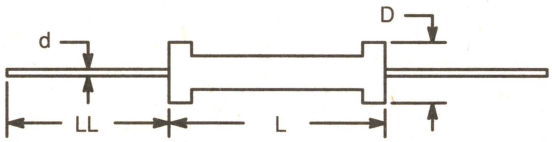

5 WATT POWER WIREWOUND

Value in Ohms	NTE Stock Number	Value in Ohms	NTE Stock Number	Value in Ohms	NTE Stock Number	Value in Ohms	NTE Stock Number	Value in Ohms	NTE Stock Number	Value in Ohms	NTE Stock Number	Value in Ohms	NTE Stock Number
.10	5WD10	.39	5WD39	1.2	5W1D2	8.2	5W8D2	68	5W068	560	5W156	4.7K	5W247
.12	5WD12	.43	5WD43	1.5	5W1D5	10	5W010	82	5W082	680	5W168	5.6K	5W256
.15	5WD15	.47	5WD47	1.8	5W1D8	12	5W012	100	5W110	820	5W182	6.8K	5W268
.18	5WD18	.51	5WD51	2.2	5W2D2	15	5W015	120	5W112	1K	5W210	8.2K	5W282
.20	5WD20	.56	5WD56	2.7	5W2D7	18	5W018	150	5W115	1.2K	5W212	8.5K	5W285
.22	5WD22	.62	5WD62	3.3	5W3D3	22	5W022	180	5W118	1.5K	5W215	10K	5W310
.24	5WD24	.68	5WD68	3.9	5W3D9	27	5W027	220	5W122	1.8K	5W218	11K	5W311
.27	5WD27	.75	5WD75	4.7	5W4D7	33	5W033	270	5W127	2.2K	5W222	12K	5W312
.30	5ED30	.82	5WD82	5.0	5W5D0	39	5W039	330	5W133	2.7K	5W227	15K	5W315
.33	5WD33	.91	5WD91	5.1	5W5D1	47	5W047	390	5W139	3.3K	5W233		
.36	5WD36	1.0	5W1D0	6.8	5W6D8	56	5W056	470	5W147	3.9K	5W239		

SPECIFICATIONS

Electrical Characteristics @ 70°C

NTE Number	Quantity Per Package	Resistance Range (Ohms)	Tolerance (%)	Voltage (Volts)	Temperature Coefficient (PPM/°C)
5WD10 to 5W315	2	0.10 to 15K	5	200	300

Mechanical* (Typical, inches/mm)

NTE Number	Body Length (L)	Body Width/Height (W/H)	Lead Diameter (d)	Lead Length (LL)
5WD10 to 5W315	0.88 (22)	0.38 (9.65)	0.036 (0.80)	1.5 (38.1)

* These dimensions are for reference only, please consult the factory for actual size.

10 WATT POWER WIREWOUND

Value in Ohms	NTE Stock Number	Value in Ohms	NTE Stock Number	Value in Ohms	NTE Stock Number	Value in Ohms	NTE Stock Number	Value in Ohms	NTE Stock Number	Value in Ohms	NTE Stock Number	Value in Ohms	NTE Stock Number
.10	10WD10	.39	10WD39	1.2	10W1D2	8.2	10W8D2	68	10W068	560	10W156	4.7K	10W247
.12	10WD12	.43	10WD43	1.5	10W1D5	10	10W010	82	10W082	680	10W168	5.6K	10W256
.15	10WD15	.47	10WD47	1.8	10W1D8	12	10W012	100	10W110	820	10W182	6.8K	10W268
.18	10WD18	.51	10WD51	2.0	10W2D0	15	10W015	120	10W112	1K	10W210	8.2K	10W282
.20	10WD20	.56	10WD56	2.2	10W2D2	18	10W018	150	10W115	1.2K	10W212	10K	10W310
.22	10WD22	.62	10WD62	2.7	10W2D7	22	10W022	180	10W118	1.5K	10W215	11K	10W311
.24	10WD24	.68	10WD68	3.3	10W3D3	27	10W027	220	10W122	1.8K	10W218	12K	10W312
.27	10WD27	.75	10WD75	3.9	10W3D9	33	10W033	270	10W127	2.2K	10W222	15K	10W315
.30	10WD30	.82	10WD82	4.7	10W4D7	39	10W039	330	10W133	2.7K	10W227	18K	10W318
.33	10WD33	.91	10WD91	5.1	10W5D1	47	10W047	390	10W139	3.3K	10W233	22K	10W322
.36	10WD36	1.0	10W1D0	6.8	10W6D8	56	10W056	470	10W147	3.9K	10W239	27K	10W327

SPECIFICATIONS

Electrical Characteristics @ 70°C

NTE Number	Quantity Per Package	Resistance Range (Ohms)	Tolerance (%)	Voltage (Volts)	Temperature Coefficient (PPM/°C)
10WD10 to 10W327	2	0.10 to 27K	5	550	300

Mechanical* (Typical, inches/mm)

NTE Number	Body Length (L)	Body Width/Height (W/H)	Lead Diameter (d)	Lead Length (LL)
10WD10 to 10W327	1.88 (48)	0.38 (9.65)	0.036 (0.80)	1.5 (38.1)

* These dimensions are for reference only, please consult the factory for actual size.

25 WATT FUSIBLE POWER OXIDE

Value in Ohms	NTE Stock Number	Value in Ohms	NTE Stock Number	Value in Ohms	NTE Stock Number	Value in Ohms	NTE Stock Number	Value in Ohms	NTE Stock Number	Value in Ohms	NTE Stock Number	Value in Ohms	NTE Stock Number
.20	25WD20	.47	25WD47	1.2	25W1D2	5.1	25W5D1	47	25W047	330	25W133	1.8K	25W218
.22	25WD22	.51	25WD51	1.5	25W1D5	6.8	25W6D8	62	25W062	390	25W139	2.2K	25W222
.24	25WD24	.56	25WD56	2.0	25W2D0	8.2	25W8D2	75	25W075	470	25W147	2.7K	25W227
.27	25WD27	.62	25WD62	2.2	25W2D2	10	25W010	100	25W110	560	25W156	3.3K	25W233
.30	25WD30	.68	25WD68	2.7	25W2D7	15	25W015	120	25W112	680	25W168	3.9K	25W239
.33	25WD33	.75	25WD75	3.0	25W3D0	20	25W020	150	25W115	820	25W182	4.7K	25W247
.36	25WD36	.82	25WD82	3.3	25W3D3	27	25W027	180	25W118	1K	25W210	5.6K	25W256
.39	25WD39	.91	25WD91	3.9	25W3D9	30	25W030	220	25W122	1.2K	25W212	6.8K	25W268
.43	25WD43	1.0	25W1D0	4.7	25W4D7	39	25W039	270	25W127	1.5K	25W215	8.2K	25W282

SPECIFICATIONS

Electrical Characteristics @ 70°C

NTE Number	Quantity Per Package	Resistance Range (Ohms)	Tolerance (%)	VOLTAGE (%Volts)	Temperature Coefficient (PPM/°C)
25WD20 to 25W282	1	0.20 to 8.2K	5	800	300

Mechanical* (Typical, inches/mm)

NTE Number	Body Length (L)	Body Width/Height (W/H)	Lead Diameter (d)	Lead Length (LL)
25WD020 to 25W282	2.5 (63.5)	0.50 (12.5)	0.040 (1.0)	1.5 (38.1)

* These dimensions are for reference only, please consult the factory for actual size.

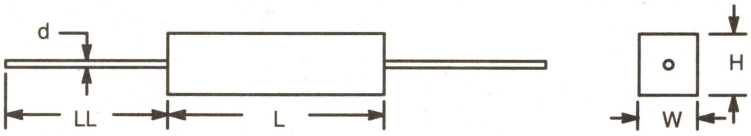

NEV, NEH SERIES

SUBMINIATURE
(NEV: Radial Lead, NEH: Axial Leads)

The NEV and NEH series subminiature aluminum electrolytic capacitors are especially suitable for applications requiring high capacitance, low cost, and very small size. In fact, you'll find these capacitors in some of the most demanding applications, from precision medical electronics and automobiles to the newest personal computers and disk drives.

They operate over a broad temperature range and are available in either blister pack or bulk.

RATINGS

Capacitance Range: 0.1µf to 22,000µf

Tolerance: ±20%

Voltage Range: 6.3V to 100V

PERFORMANCE SPECIFICATIONS

Operating Temperature Range:

–40°C to +85°C (–40°F to +185°F)

Leakage Current: $I \leq 0.01CV + 3\mu A$ (measured after 3 minutes of applied voltage)

I = Leakage Current (µA)
C = Nominal Capacitance (µf)
V = Rated Voltage (V)

Capacitance Tolerance (M): ±20% measured at +20°C (+68°F), 120Hz

Dissipation Factor: measured at +20°C (+68°F),120Hz

Rated Voltage	6.3	10	16	25	35	50–80	100
0.1µf to 1000µf	0.24	0.2	0.17	0.15	0.12	0.10	0.08
1000µf to 22,000µf	Values above plus 0.02 for each 1000µf						

Impedance Ratio at Low Temperature: 120Hz

Comparison Z WV	6.3	10	16	25	35	50–100
Z @ –25°C (–13°F)/ Z @ +20°C (+68°F)	4	3	2	2	2	2
Z @ –40°C (–40°F)/ Z @ +20°C (+68°F)	8	6	4	4	4	4

Surge Voltage:

DC Rated Voltage	6.3	10	16	25	35	50	63	100
Surge Voltage	8	13	20	32	44	63	79	125

Load Life: 1000 ±12Hrs @ +85°C (+185°F), at rated voltage

Leakage Current: Within values specified above
Dissipation Factor: Within ±150% of specified value
Capacitance Change Max: See Table

Rated Voltage	Capacitance Change Max
6.3V to 16V	Within ±30% of the initial value
25V to 100V	Within ±20% of the initial value

Shelf Life: 1000 Hrs @ +85°C (+185°F), no voltage applied

Leakage Current: Within ±200% of specified value
Dissipation Factor: Within ±150% of specified value
Capacitance Change Max: Within ±20% of initial value

MECHANICAL SPECIFICATIONS

Lead Solderability:

Meets the requirements of MIL–STD 202, Method 208

Marking:

Consists of series type, nominal capacitance, rated voltage, temperature range, anode and/or cathode identification, vendor identification.

Recommended Cleaning Solvents:

Methanol, isopropanol ethanol, isobutanol, petroleum ether, propanol and/or commercial detergents. Halogenated hydrocarbon cleaning agents such as Freon (MF, TF, or TC), trichloroethylene, trichloroethane, or methylchloride are not recommended as they may damage the capacitor.

CASE SIZE AND DIMENSIONS:

NEV SERIES

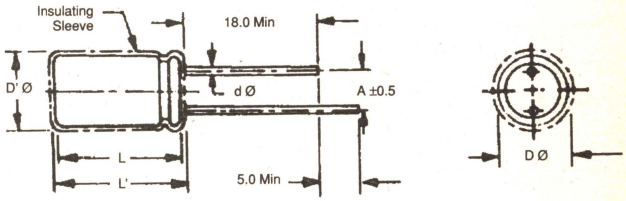

D' Ø = D Ø + 0.5 Max L' = L + 1.0 Max at D Ø ≤ 8.0 L' = L + 2.0 Max at D Ø ≥ 10.0

NEH SERIES

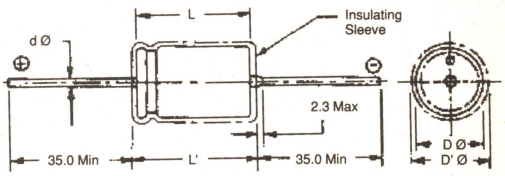

D' Ø = D Ø + 0.5 Max L' = L + 1.0 Max at D Ø ≤ 8.0 L' = L + 2.0 Max at D Ø ≥ 10.0

ORDERING INFORMATION

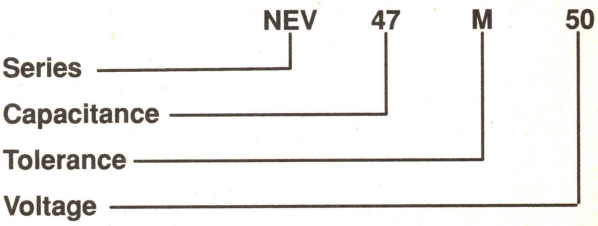

NEV, NEH SERIES

NEV Series (Radial Type) Dimensions: Diameter (D Ø) x Length (L): mm

Cap (µf) \ WV	6.3	10	16	25	35	50	63	100
0.10						5 x 11	5 x 11	5 x 11
0.15								5 x 11
0.22						5 x 11	5 x 11	5 x 11
0.33						5 x 11	5 x 11	5 x 11
0.47						5 x 11	5 x 11	5 x 11
0.56						5 x 11	5 x 11	
0.68								5 x 11
1.0						5 x 11	5 x 11	5 x 11
1.5							5 x 11	5 x 11
2.2						5 x 11	5 x 11	5 x 11
3.3						5 x 11	5 x 11	5 x 11
4.7						5 x 11	5 x 11	5 x 11
6.8						5 x 11	5 x 11	6.3 x 11
10						5 x 11	5 x 11	6.3 x 11
15					5 x 11	5 x 11	6.3 x 11	8 x 11.5
22				5 x 11	5 x 11	5 x 11	6.3 x 11	8 x 11.5
33			5 x 11	5 x 11	5 x 11	6.3 x 11	6.3 x 11	10 x 12.5
47		5 x 11	5 x 11	5 x 11	6.3 x 11	6.3 x 11	8 x 11.5	10 x 16
68		6.3 x 11	6.3 x 11	8 x 11.5	8 x 11.5	10 x 12.5	10 x 16	10 x 20
100		5 x 11	6.3 x 11	6.3 x 11	8 x 11	8 x 11	10 x 12.5	13 x 21
150	8 x11.5	8 x 11.5	8.5 x 11	10 x 12	10 x 16	10 x 20	13 x 20	13x 25
220	6.3 x 11	6.3 x 11	8 x 11.5	8 x 11.5	10 x 12.5	10 x 16	10 x 20	16 x 25
330	6.3 x 11	8 x 11.5	8 x 11.5	10 x 12.5	10 x 16	10 x 20	13 x 21	16 x 25
470	8 x 11	8 x 11.5	10 x 12.5	10 x 16	10 x 20	13 x 21	13 x 25	16 x 31.5
680	10 x 16		10 x 12.5	10 x 16	13 x 21	13 x 25	13 x 25	16 x 25
1000	10 x 12.5	10 x 16	10 x 20	13 x 21	13 x 25	16 x 25	16 x 31.5	18 x 40
1500	13 x 25	13 x 25	16 x 31.5	16 x 35.5	16 x 35.5			
2200	13 x 21	13 x 21	13 x 25	16 x 25	16 x 31.5	18 x 36	18 x 40	
3300	13 x 21	13 x 25	16 x 25	16 x 31.5	18 x 36	18 x 40	22 x 41	
4700	16 x 25	16 x 25	16 x 31.5	18 x 36	18 x 40	22 x 41		
6800	16 x 25	16 x 31.5	18 x 16	18 x 40	22 x 41			
10000	16 x 31.5	18 x 36	18 x 40	22 x 41				
22000		18 x 46						

* These dimensions are for reference only, please consult the factory for actual size.

NEV Series (Radial Type) Mechanical Specifications: mm

Outside Diameter (D Ø)	5	6.3	8	10	13	16	18	22
Lead Spacing (A)	2	2.5	3.5	5	5	7.5	7.5	10
Lead Diameter (d Ø)	0.5	0.6	0.6	0.6	0.6	0.8	0.8	1.0

* These dimensions are for reference only, please consult the factory for actual size.

NEV, NEH SERIES

NEH Series (Axial Type) Dimensions: Diameter (D Ø) x Length (L): mm

Cap (µf) \ WV	6.3	10	16	25	35	50	63	100
0.10						5 x 12.5	5 x 12.5	5 x 12.5
0.22						5 x 12.5	5 x 12.5	5 x 12.5
0.33						5 x 12.5	5 x 12.5	5 x 12.5
0.47						5 x 12.5	5 x 12.5	5 x 12.5
0.68							5 x 12.5	
1.0						5 x 12.5	5 x 12.5	5 x 12.5
1.5							5 x 11	
2.2						5 x 12.5	5 x 12.5	5 x 12.5
3.3						5 x 12.5	5 x 12.5	5 x 12.5
4.7						5 x 12.5	5 x 12.5	5 x 12.5
6.8						5 x 11	6.3 x 11	
10				6.3 x 12.5	5 x 11	6.3 x 12.5	6.3 x 12.5	6.3 x 16
15			5 x 11	5 x 11	6.3 x 11	6.3 x 11	8 x 11.5	
22			5 x 11	6.3 x 12.5	6.3 x 12.5	6.3 x 16	8 x 16	8 x 20
33		5 x 12	6.3 x 12.5	6.3 x 12.5	6.3 x 16	8 x 16	8 x 16	8 x 20
47	5 x 11	6.3 x 12.5	6.3 x 12.5	6.3 x 16	8 x 16	8 x 16	8 x 20	10 x 20
68	6.3 x 11	6.3 x 11	8 x 11.5	8 x 16	8 x 16	10 x 12.5	10 x 16	
100	6.3 x 12.5	6.3 x 16	6.3 x 16	8 x 16	8 x 20	8 x 20	10 x 20	10 x 25
150	8 x 16	8 x 16	8 x 16	10 x 16	10 x 16	10 x 16	10 x 20	
220	8 x 16	8 x 16	8 x 16	8 x 20	10 x 20	10 x 20	10 x 25	13 x 25
330	8 x 16	8 x 16	8 x 20	10 x 20	10 x 20	13 x 25	13 x 25	13 x 35
470	8 x 16	8 x 20	10 x 20	10 x 20	10 x 25	13 x 25	13 x 30	16 x 30
680	10 x 16	10 x 20	10 x 20	10 x 25	13 x 25	13 x 30	16 x 30	16 x 30
1000	10 x 20	10 x 20	13 x 25	13 x 25	13 x 30	16 x 30	16 x 30	18 x 40
1500	13 x 25	13 x 25	13 x 20	16 x 31.5				
2200	10 x 25	13 x 25	13 x 30	16 x 25	16 x 30	18 x 40	22 x 40	
3300	13 x 25	13 x 30	16 x 30	16 x 30	16 x 40	22 x 40	22 x 50	
4700	16 x 30	16 x 30	16 x 40	18 x 40	22 x 40	22 x 50		
6800	16 x 30	16 x 40	18 x 40	22 x 40	22 x 50			
10000	16 x 30	18 x 40	22 x 40	22 x 50				
22000		25 x 50						

* These dimensions are for reference only, please consult the factory for actual size.

NEH Series (Axial Type) Mechanical Specifications: mm

Outside Diameter (D Ø)	5	6.3	8	10	13	16	18	22	25
Lead Diameter (d Ø)	0.6	0.6	0.6	0.6	0.8	0.8	0.8	0.8	0.8

* These dimensions are for reference only, please consult the factory for actual size.

NEVH, NEHH (High Voltage) SERIES

SUBMINIATURE HIGH VOLTAGE (NEVH: Radial Lead, NEHH: Axial Leads)

The NEVH and NEHH series subminiature aluminum electrolytic capacitors are ideal for polarized capacitor applications requiring small size, high capacitance, high voltage, low cost, and dependability over broad temperature ranges.

RATINGS

Capacitance Range: 1.0µf to 470µf

Tolerance: –10%, +75%

Voltage Range: 160V to 450V

PERFORMANCE SPECIFICATIONS

Operating Temperature Range:

- For 160V and 250V:
  –40°C to +85°C (–40°F to +185°F)
- For 350V and 450V:
  –25°C to +85°C (–13°F to +185°F)

Leakage Current: $I \leq 0.02CV + 100\mu A$ (measured after 3 minutes of applied voltage)

I = Leakage Current (µA)
C = Nominal Capacitance (µf)
V = Rated Voltage (V)

Capacitance Tolerance (T): at +20°C (+68°F), 120Hz

Capacitance Values through 4.7µf –10% to +75%
Capacitance Values above 4.7µf –10% to +50%

Dissipation Factor: at +20°C (+68°F),120Hz

Rated Voltage	160, 250, and 350	450
1.0µf to 470µf	0.20	0.25

Impedance Ratio at Low Temperature: 120Hz

Comparison Z WV	160–250	350	450
Z @ –25°C (–13°F)/ Z @ +20°C (+68°F)	2	2	2
Z @ –40°C (–40°F)/ Z @ +20°C (+68°F)	4	–	–

Surge Voltage:

DC Rated Voltage	160	250	350	450
Surge Voltage	200	300	400	500

Load Life: 1000 ±12Hrs @ +85°C (+185°F), at rated voltage

Leakage Current: Within values specified above
Dissipation Factor: Within ±200% of specified value
Capacitance Change Max: See Table

Rated Voltage	Capacitance Change Max
160V to 450V	Within 20% of the initial value

Shelf Life: 1000 Hrs @ +85°C (+185°F), no voltage applied

Leakage Current: Within ±200% of specified value
Dissipation Factor: Within ±150% of specified value
Capacitance Change Max: Within ±20% of initial value

MECHANICAL SPECIFICATIONS

Lead Solderability:

Meets the requirements of MIL–STD 202, Method 208

Marking:

Consists of series type, nominal capacitance, rated voltage, temperature range, anode and/or cathode identification, vendor identification.

Recommended Cleaning Solvents:

Methanol, isopropanol ethanol, isobutanol, petroleum ether, propanol and/or commercial detergents. Halogenated hydrocarbon cleaning agents such as Freon (MF, TF, or TC), trichloroethylene, trichloroethane, or methylchloride are not recommended as they may damage the capacitor.

CASE SIZE AND DIMENSIONS:

NEV SERIES

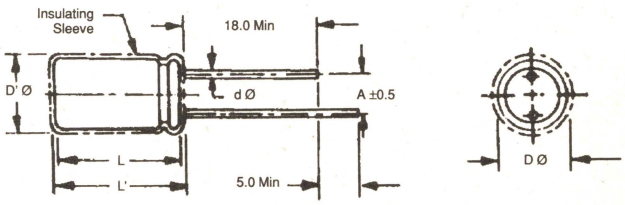

D' Ø = D Ø + 0.5 Max L' = L + 1.0 Max at D Ø ≤ 8.0 L' = L + 2.0 Max at D Ø ≥ 10.0

NEH SERIES

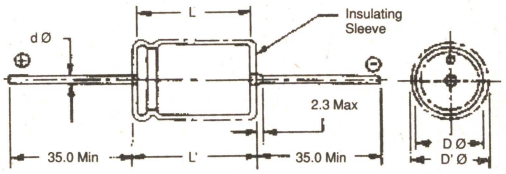

D' Ø = D Ø + 0.5 Max L' = L + 1.0 Max at D Ø ≤ 8.0 L' = L + 2.0 Max at D Ø ≥ 10.0

ORDERING INFORMATION

NEVH 47 T 160

Series — NEVH
Capacitance — 47
Tolerance — T
Voltage — 160

NEVH, NEHH (High Voltage) SERIES

NEVH Series (Radial Type) Dimensions: Diameter (D Ø) x Length (L): mm

Cap (µf) \ WV	160	250	350	450
1.0	6.3 x 11	6.3 x 11	8 x 11.5	10 x 12.5
2.2	6.3 x 11	8 x 11.5	10 x 12.5	10 x 16
3.3	8 x 11.5	10 x 12.5	10 x 16	10 x 20
4.7	8 x 11.5	10 x 12.5	10 x 16	13 x 20
10	10 x 12.5	10 x 20	13 x 21	13 x 25
22	10 x 20	13 x 25	13 x 25	16 x 31.5
33	13 x 21	13 x 25	16 x 31.5	18 x 35.5
47	13 x 25	16 x 25	18 x 36	22 x 35
100	16 x 25	18 x 36	22 x 35	25 x 40
220	18 x 35			
330	22 x 35			
470	22 x 40			

* These dimensions are for reference only, please consult the factory for actual size.

NEVH Series (Radial Type) Mechanical Specifications: mm

Outside Diameter (D Ø)	6.3	8	10	13	16	18	22	25
Lead Spacing (A)	2.5	3.5	5	5	7.5	7.5	10	12.5
Lead Diameter (d Ø)	0.5	0.6	0.6	0.6	0.8	0.8	0.8	1.0

* These dimensions are for reference only, please consult the factory for actual size.

NEHH Series (Axial Type) Dimensions: Diameter (D Ø) x Length (L): mm

Cap (µf) \ WV	160	250	350	450
1.0	6.3 x 16	8 x 16	8 x 16	10 x 20
2.2	8 x 16	8 x 20	10 x 20	10 x 20
3.3	8 x 1 6	10 x 20	10 x 20	10 x 20
4.7	8 x 20	10 x 20	10 x 20	13 x 25
10	10 x 25	10 x 20	13 x 25	13 x 30
22	10 x 20	13 x 25	13 x 30	16 x 30
33	13 x 25	13 x 30	16 x 30	16 x 40
47	13 x 30	16 x 30	16 x 40	16 x 40
100	16 x 30	16 x 40	18 x 40	22 x 40
220	22 x 40			
330	25 x 52			
470	22 x 52			

* These dimensions are for reference only, please consult the factory for actual size.

NEHH Series (Axial Type) Mechanical Specifications: mm

Outside Diameter (D Ø)	6.3	8	10	13	16	18	22	25
Lead Diameter (d Ø)	0.6	0.6	0.6	0.8	0.8	0.8	0.8	0.8

* These dimensions are for reference only, please consult the factory for actual size.

NPR, NPA (Non–Polarized) SERIES

SUBMINIATURE NON–POLARIZED (NPR: Radial Leads, NPA: Axial Leads)

The NPR and NPA Series subminiature aluminum electrolytic capacitors are especially designed for use in circuits whose polarity is reversed or unknown or in crossover networks which do not require tough characteristic requirements.

RATINGS

Capacitance Range: 0.47µf to 1000µf

Tolerance: ±20%

Voltage Range: 16V to 100V

PERFORMANCE SPECIFICATIONS

Operating Temperature Range:

–40°C to +85°C (–40°F to +185°F)

Leakage Current: $I \leq 0.002CV + 3\mu A$ (measured after 5 minutes of applied voltage)

I = Leakage Current (µA)
C = Nominal Capacitance (µf)
V = Rated Voltage (V)

Capacitance Tolerance (M): ±20% measured at 20°C (68°F), 120Hz

Dissipation Factor: measured at +20°C (+68°F), 120Hz

Rated Voltage	16	25	50	63	100
0.1µf to 1000µf	0.16	0.12	0.08	0.06	0.06

Impedance Ratio at Low Temperature: 120Hz

Comparison Z WV	16	25	50	63	100
Z @ –25°C (–13°F)/ Z @ +20°C (+68°F)	2	1.5	1.5	2	2
Z @ –40°C (–40°F)/ Z @ +20°C (+68°F)	3	2	2	4	4

Surge Voltage:

DC Rated Voltage	16	25	50	63	100
Surge Voltage	20	32	63	79	125

Load Life: 1000 ±12Hrs @ +85°C (+185°F), at rated voltage

Leakage Current: Within values specified above
Dissipation Factor: Within ±150% of specified value
Capacitance Change Max: ±15% of initial value

Rated Voltage	Capacitance Change Max
160V to 450V	Within 30% of the initial value

Shelf Life: 1000 Hrs @ +85°C (+185°F), no voltage applied

Leakage Current: Within values specified above
Dissipation Factor: Within ±150% of specified value
Capacitance Change Max: Within ±15% of initial value

MECHANICAL SPECIFICATIONS

Lead Solderability:

Meets the requirements of MIL–STD 202, Method 208

Marking:

Consists of series type, nominal capacitance, rated voltage, temperature range, anode and/or cathode identification, vendor identification.

Recommended Cleaning Solvents:

Methanol, isopropanol ethanol, isobutanol, petroleum ether, propanol and/or commercial detergents. Halogenated hydrocarbon cleaning agents such as Freon (MF, TF, or TC), trichloroethylene, trichloroethane, or methylchloride are not recommended as they may damage the capacitor.

CASE SIZES AND DIMENSIONS:

NPR SERIES

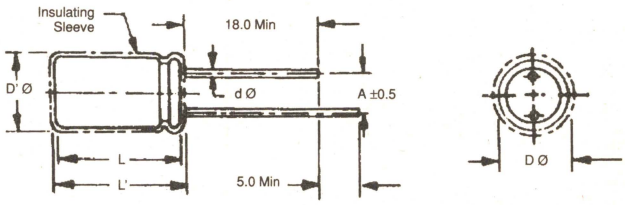

D' Ø = D Ø + 0.5 Max L' = L + 1.0 Max at D Ø ≤ 8.0 L' = L + 2.0 Max at D Ø ≥ 10.0

NPA SERIES

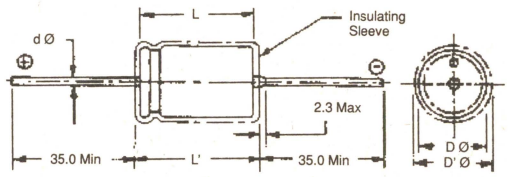

D' Ø = D Ø + 0.5 Max L' = L + 1.0 Max at D Ø ≤ 8.0 L' = L + 2.0 Max at D Ø ≥ 10.0

ORDERING INFORMATION

	NPR	47	M	50
Series				
Capacitance				
Tolerance				
Voltage				

NPR, NPA (Non–Polarized) SERIES

NPR Series (Radial Type) Dimensions: Diameter (D Ø) x Length (L): mm

Rated Voltage (WV)	16	25	50	63	100
Surge Voltage (V) / Cap (µf)	**20**	**32**	**63**	**79**	**125**
0.47			5 x 11		5 x 11
1.0			5 x 11		5 x 11
2.2			5 x 11	5 x 11	6 x 11
3.3			5 x 11	6 x 11	8 x 11.5
4.7		5 x 11	6 x 11	6 x 11	8 x 11.5
10	5 x 11	5 x 11	8 x 11.5	8 x 11.5	10 x 12.5
22	6 x 11	6 x 11	10 x 12.5	10 x 12.5	10 x 20
33	6 x 11	8 x 11.5	10 x 16	10 x 16	13 x 20
47	8 x 11.5	10 x 12.5	10 x 20	10 x 20	13 x 25
100	10 x 12.5	10 x 16	13 x 25	13 x 25	16 x 25
220	10 x 20	13 x 25	16 x 25	16 x 30	
330	13 x 20	13 x 25	16 x 30.5		
470	13 x 25	16 x 25			
1000	16 x 25	16 x 30.5			

* These dimensions are for reference only, please consult the factory for actual size.

NPA Series (Axial Type) Dimensions: Diameter (D Ø) x Length (L): mm

Rated Voltage (WV)	16	25	50	63	100
Surge Voltage (V) / Cap (µf)	**20**	**32**	**63**	**79**	**125**
0.47			6 x 15		6 x 15
1.0			6 x 15		6 x 15
2.2			6 x 15	6 x 15	6 x 15
3.3			6 x 15	6 x 15	6 x 19
4.7			6 x 15	6 x 15	8 x 19
10		6 x 15	6 x 19	8 x 19	10 x 21
22	6 x 15	6 x 19	10 x 21	10 x 21	10 x 25
33	6 x 19	8 x 19	10 x 21	10 x 25	13 x 30
47	8 x 19	8 x 19	10 x 25	10 x 25	13 x 30
100	10 x 21	10 x 25	13 x 30	13 x 30	16 x30
220	10 x 25	13 x 30	16 x 30	16 x 30	
330	10 x 30	13 x 30	16 x 41	16 x 41	
470	13 x 30	16 x 30			
1000	16 x 30				

* These dimensions are for reference only, please consult the factory for actual size.

SOLID TANTALUM CAPACITORS

TD (Resin Dipped Radial) SERIES

SOLID TANTALUM

The TD series is a range of resin dipped tantalum capacitors designed for entertainment, commercial, and industrial equipment. They have sintered anodes and solid electrolyte. The epoxy resin housing is flame retardent with a limiting oxygen index in excess of 30 (ASTM–D–2863).

RATINGS

Capacitance Range: 0.1µf to 680µf
Tolerance: ±20%
Voltage Range: 6.3V to 50V

PERFORMANCE SPECIFICATIONS

Operating Temperature Range:
–55°C to +85°C (–67°F to +185°F)

Capacitance Tolerance (M): ±20%
measured at +20°C (+68°F), 120Hz

Dissipation Factor: measured at +20°C (+68°F),120Hz

Capacitance Range µf	0.1 – 1.5	2.2 – 6.8	10 – 68	100 – 680
	≤ 0.04	≤ 0.06	≤ 0.08	≤ 0.10

Surge Voltage:

DC Rated Voltage	6.3	10	16	20	25	35	50
Surge Voltage	8	13	20	26	33	46	65

MECHANICAL SPECIFICATIONS

Lead Solderability:
Meets the requirements of MIL–STD 202, Method 208

Marking:
Consists of capacitance, DC voltage, and polarity.

Recommended Cleaning Solvents:
Methanol, isopropanol ethanol, isobutanol, petroleum ether, propanol and/or commercial detergents. Halogenated hydrocarbon cleaning agents such as Freon (MF, TF, or TC), trichloroethylene, trichloroethane, or methylchloride are not recommended as they may damage the capacitor.

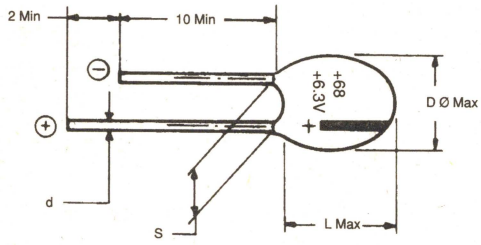

ORDERING INFORMATION

	TD	47	M	50
Series				
Capacitance				
Tolerance				
Voltage				

CAPACITANCE RANGE:

(Number denotes case size)

Rated Voltage (WV)	6.3	10	16	20	25	35	50
Surge Voltage (V) / Cap (µf)	8	13	20	26	33	46	65
0.10						1	1
0.15						1	1
0.22						1	1
0.33						1	2
0.47						1	2
0.68						1	2
1.0				1	1	1	4
1.5			1	1	1	2	5
2.2		1	1	2	2	3	5
3.3	1	1	2	3	3	4	7
4.7	1	2	3	4	4	5	8
6.8	2	3	4	5	5	6	8
10.0	3	4	5	6	6	7	9
15.0	4	5	6	7	7	9	10
22.0	5	6	7	8	9	10	13
33.0	6	7	8	9	10	12	
47.0	7	8	10	11	12	14	
68.0	8	9	11	13	13		
100.0	9	11	13				
150.0	11	13	15				
220.0	12	14	15				
330.0	14	15					
470.0	15						
680.0	15						

TD Series Dimensions: mm

Diameter (D Ø) x Length (L)

Case Size	Diameter (D Ø)	Length (L)	Lead Wire (d)	Spacing (S)
1	4.50	8.50	0.50	2.54 ±0.51
2	4.50	9.00	0.50	
3	5.00	10.00	0.50	
4	5.00	10.50	0.50	
5	5.50	10.50	0.50	
6	6.00	11.50	0.50	
7	6.50	11.50	0.50	
8	7.00	12.00	0.40	
9	8.00	13.00	0.50	5.08 ±0.51
10	8.50	14.00	0.50	
11	9.00	14.00	0.50	
12	9.00	14.50	0.50	
13	9.00	16.00	0.50	
14	10.00	17.00	0.50	
15	10.00	18.50	0.50	

105°C ELECTROLYTIC CAPACITORS

VHT SERIES

SUBMINIATURE (Radial Lead, 105°C Max)

The NTE VHT series of aluminum electrolytic capacitors are designed for use in automotive, commercial, and industrial applications. These high temperature, radial lead capacitors are especially suitable for applications that require extended life and higher temperature operation.

RATINGS

Capacitance Range: 0.1µf to 4700µf

Tolerance: ±20%

Voltage Range: 16 to 250 Volts

PERFORMANCE SPECIFICATIONS

Operating Temperature Range:

–40°C to +105°C (–40°F to +220.9°F)

Leakage Current:

6.3V to 100V: ≤ 0.01CV (+3µA)

160V to 250V: ≤ 0.03CV (+15µA)

Capacitance Tolerance: ±20% (M)
measured at +20°C (+68°F), 120Hz

High Temperature Load Test:

1000 Hrs @ +105°C (+220.9°F) and rated voltage

Ripple Current:

The ripple current multipliers (See Table) adjust the current to make the capacitors operating temperature the same for different ambient temperatures and ripple frequencies.

Temperature	45°C	55°C	65°C	75°C	85°C	95°C	105°C
Multiplier	1.5	1.46	1.32	1.17	1.0	0.79	0.5

Load Life: 1000 Hrs @ +105°C (+220.9°F), no voltage applied

Shelf Life: 1000 Hrs @ +105°C (+220.9°F), no voltage applied

MECHANICAL SPECIFICATIONS

Lead Solderability:

Meets the requirements of MIL–STD 202, Method 208

Marking:

Consists of series type, nominal capacitance, rated voltage, temperature range, anode and/or cathode identification, vendor identification.

Recommended Cleaning Solvents:

Methanol, isopropanol ethanol, isobutanol, petroleum ether, propanol and/or commercial detergents. Halogenated hydrocarbon cleaning agents such as Freon (MF, TF, or TC), trichloroethylene, trichloroethane, or methylchloride are not recommended as they may damage the capacitor.

CASE SIZE AND DIMENSIONS:

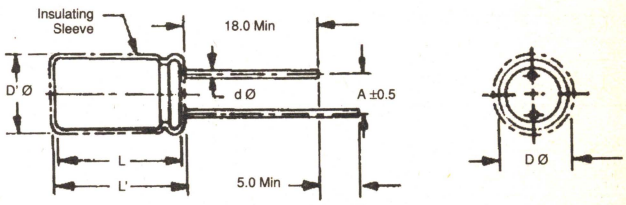

D'Ø = DØ + 0.5 Max L' = L + 1.0 Max at DØ ≤ 8.0 L' = L + 2.0 Max at DØ ≥ 10.0

ORDERING INFORMATION

VHT 10 M 25

Series — VHT
Capacitance — 10
Tolerance — M
Voltage — 25

105°C ELECTROLYTIC CAPACITORS

VHT SERIES

VHT Series Dimensions: Diameter (D Ø) x Length (L): mm

Cap (µf) \ WV	16	25	35	50	63	160	250
0.1				5 x 11			
0.22				5 x 11			
0.33				5 x 11			
0.47				5 x 11	5 x 11		
1.0				5 x 11	5 x 11	6 x 11	6 x 11
2.2				5 x 11	5 x 11	6 x 11	8 x 11.5
3.3				5 x 11	5 x 11	8 x 11.5	10 x 12.5
4.7		5 x 11	5 x 11	5 x 11	5 x 11	8 x 11.5	10 x 12.5
10	5 x 11	5 x 11	5 x 11	5 x 11	6 x 11	10 x 12.5	10 x 20
22	5 x 11	5 x 11	6 x 11	6 x 11	8 x 11.5	10 x 20	13 x 25
33	5 x 11	6 x 11	6 x 11	8 x 11.5	8 x 11.5	13 x 21	13 x 25
47	6 x 11	6 x 11	8 x 11.5	8 x 11.5	10 x 12.5	13 x 25	16 x 25
100	8 x 11.5	8 x 11.5	10 x 12.5	10 x 16	10 x 20	16 x 25	18 x 36
220	10 x 12.5	10 x 16	10 x 20	13 x 20	13 x 20		
330	10 x 16	10 x 20	13 x 20	13 x 20	13 x 25		
470	10 x 20	13 x 20	13 x 25	16 x 20	16 x 20		
1000	13 x 25	16 x 20	16 x 20	16 x 25	18 x 31.5		
2200	16 x 20	16 x 31.5	18 x 31.5				
3300	16 x 31.5	18 x 31.5					
4700	18 x 31.5						

VHT Mechanical Specs: Dimensions (mm)

Outside Diameter	D Ø	5.0	6.0	8.0	10.0	13.0	16.0	18.0
Lead Spacing	A	2.0	2.5	3.5	5.0		7.5	
Lead Wire	d Ø	0.5			0.6		0.65	0.8

CERAMIC DISC CAPACITORS

89000 (50V) SERIES

The 89000 series is a range of insulated disc, monolythic fixed ceramic capacitors. They are most commonly used in consumer electronics and telecommunication equipment.

RATINGS

Capacitance Range: 1.0pf to 0.10µf (100,000pf)

Voltage: 50 Volts DC

Withstand Voltage: 150 Volts DC

PERFORMANCE SPECIFICATIONS

Operating Temperature Range:

–25°C to +85°C (–13°F to +185°F)

Tolerance Range:

8901D0–89010	±0.5pf
89012–89312	±10%
89315	±20%
89322–89410	+80%, –20%

Temperature Coefficient:

8901D0–89110	–	NPO (Stable)
89112–89310	–	YSP (±10%)
89312–89315	–	Y5R (±15%)
89322–89410	–	Y5V (+30% – 80%)

Insulation Resistance: 10,000MΩ Min, but, 5,000MΩ Min for capacitance over 0.020µf

ORDERING INFORMATION

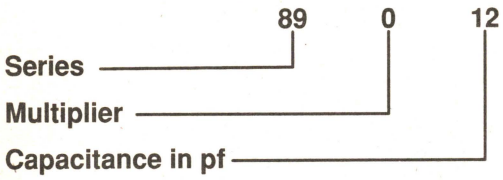

Example: 8901D5 = 1.5pf
89012 = 12pf
89112 = 120pf

MARKING EXAMPLE

Example: 150pf = 151
1500pf = 152
0.015µf = 153

Figure 1

89000 Series Dimensions (Figure 2)

Cap pf	DØ mm	T mm	S mm	Cap pf	DØ mm	T mm	S mm
1.0pf	4	4	2.5	220pf	4	4	2.5
1.5pf	4	4	2.5	330pf	4	4	2.5
2.0pf	4	4	2.5	470pf	4	4	2.5
3.0pf	4	4	2.5	680pf	4	4	2.5
5.0pf	4	4	2.5	820pf	5	4	2.5
6.0pf	4	4	2.5	1000pf	5	4	2.5
7.0pf	4	4	2.5	1200pf	5	4	2.5
8.0pf	4	4	2.5	1500pf	5	4	2.5
10pf	4	4	2.5	2200pf	5	4	2.5
12pf	4	4	2.5	3300pf	8	4	5.1
15pf	4	4	2.5	4700pf	8	4	5.1
18pf	5	4	2.5	5600pf	9.5	4	5.1
22pf	5	4	2.5	6800pf	9.5	4	5.1
33pf	5	4	2.5	8200pf	10.5	3	5.1
39pf	6.3	4	5.1	0.01µf	12.5	3	5.1
47pf	6.3	4	5.1	0.012µf	6.3	4	5.1
56pf	6.3	4	5.1	0.015µf	6.3	4	5.1
68pf	8	4	5.1	0.022µf	8	4	5.1
82pf	8	4	5.1	0.047µf	12.5	4	5.1
100pf	8	4	5.1	0.068µf	12.25	3.25	7.5
120pf	4	4	2.5	0.10µf	7.3	3.25	4.5

Figure 2

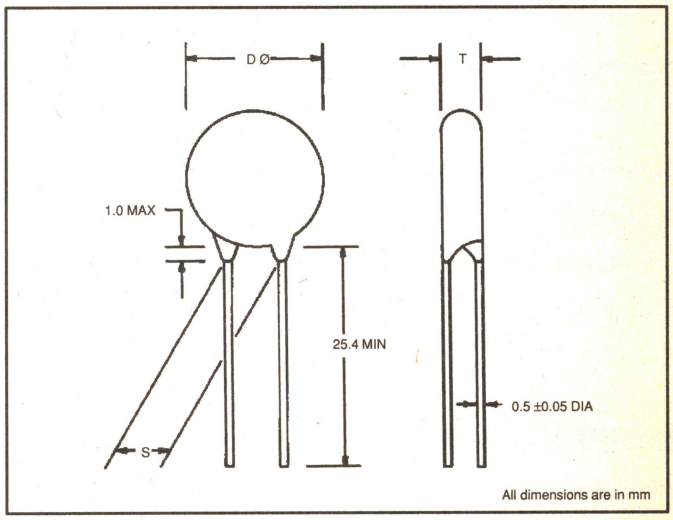

CERAMIC DISC CAPACITORS

90000 (1000V) SERIES

The 90000 series is a range of insulated disc, monolythic fixed ceramic capacitors. They are most commonly used in consumer electronics and telecommunication equipment.

RATINGS

Capacitance Range: 1.0pf to 0.10µf (100,000pf)

Voltage: 1000 Volts DC

Withstand Voltage: 2500 Volts DC

PERFORMANCE SPECIFICATIONS

Operating Temperature Range:

–25°C to +85°C (–13°F to +185°F)

Tolerance Range:

9001D0–9009D0	±0.5pf
90010–90210	±10%
90212–90220	+80%, –20%
90222	±20%
90227–90410	+80%, –20%

Temperature Coefficient:

9001D0–90091	–	SL
90110–90118	–	Y5F
90122–90210	–	Y5P
90212–90220	–	Z5V
90222	–	Z5U
90227–90410	–	Z5V

Insulation Resistance: 7500MΩ Min
measured after 1 Minute at rated voltage

ORDERING INFORMATION

	90	0	2D0
Series			
Multiplier			
Capacitance in pf			

Example: 9002D0 = 2.0pf
90220 = 2000pf
90347 = 0.047µf

MARKING EXAMPLE

Example: 2pf = 2
2000pf = 202
0.047µf = 473

Figure 1

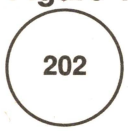

90000 Series Dimensions (Figure 2)

Cap pf	D Ø mm	S mm	Cap pf	D Ø mm	S mm	Cap pf	D Ø mm	S mm
1.0pf	5	7.5	39pf	5	7.5	1500pf	5	7.5
2.0pf	6	7.5	47pf	5	7.5	1800pf	6	7.5
2.2pf	5	7.5	56pf	5	7.5	2000pf	6	7.5
2.7pf	5	7.5	62pf	5	7.5	2200pf	6	7.5
3.0pf	5	7.5	68pf	6	7.5	2700pf	7	7.5
3.3pf	6	7.5	75pf	6	7.5	3000pf	7	7.5
4.0pf	5	7.5	82pf	6	7.5	3300pf	7	7.5
4.7pf	5	7.5	91pf	6	7.5	3900pf	7	7.5
5.0pf	5	7.5	100pf	5	7.5	4300pf	7	7.5
5.6pf	5	7.5	120pf	5	7.5	4700pf	8	7.5
6.2pf	5	7.5	150pf	5	7.5	5000pf	8	7.5
6.8pf	5	7.5	180pf	5	7.5	5600pf	8.5	7.5
7.5pf	5	7.5	220pf	5	7.5	6800pf	10.5	7.5
8.0pf	6	7.5	270pf	6	7.5	7500pf	10.5	7.5
9.0pf	5	7.5	330pf	6	7.5	8200pf	10.5	7.5
10pf	5	7.5	390pf	6	7.5	0.01µf	10.5	7.5
12pf	5	7.5	430pf	6	7.5	0.015µf	10.5	7.5
13pf	5	7.5	470pf	5	7.5	0.020µf	11.0	7.5
15pf	5	7.5	500pf	6	7.5	0.022µf	13.5	8.5
18pf	5	7.5	560pf	6	7.5	0.030µf	13.5	8.5
20pf	5	7.5	680pf	6	7.5	0.033µf	13.5	8.5
22pf	5	7.5	750pf	6	7.5	0.036µf	13.5	8.5
24pf	6	7.5	820pf	6	7.5	0.047µf	16.5	10.5
27pf	5	7.5	910pf	6	7.5	0.050µf	16.5	10.5
30pf	5	7.5	1000pf	5	7.5	0.10µf	20.0	10.5
33pf	5	7.5	1200pf	5	7.5			

Figure 2

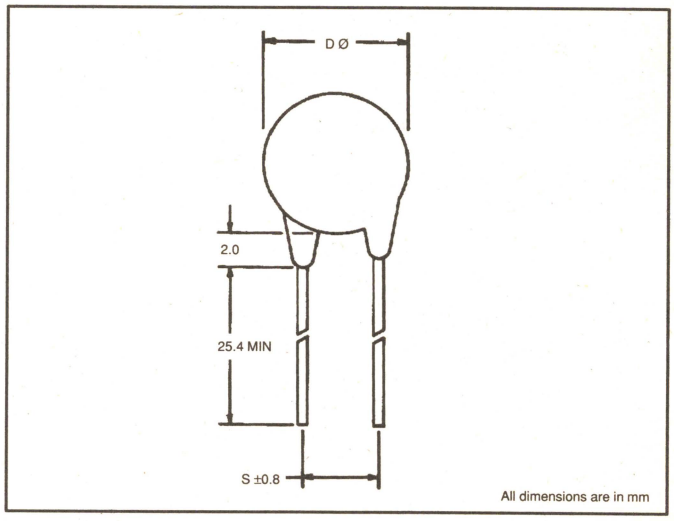

MOTOR RUN CAPACITORS

MRC SERIES

The MRC series is a range of AC metallized capacitors. These capacitors are most often used in motor run, HVAC, lighting, and power supply applications.

FEATURES:

- .25" 4–Way Quick Connect terminals
- Pressure activated circuit interrupter
- Self healing of shorts due to dielectric breakdown
- Non–PCB dielectric fluid
- Low dissipation factor
- Leak–proof terminals

RATINGS

Capacitance Range:

370 Volts – 2mfd to 50mfd

440 Volts – 2mfd to 60mfd

Tolerance: ±10%

PERFORMANCE SPECIFICATIONS

Operating Temperature Range: –55°C to +70°C

Capacitance Change Due To Temp: +5% to–7%

Dissipation Factor: 0.2%

Service Life: *150,000 hours (at Max Rating)
94% survival

Impregnant: Dykanol XK

CAPACITOR CONSTRUCTION

Metallized electrodes on both sides of paper substrate are wound with polypropylene film as a dielectric. During vacuum fluid processing the paper acts as a wick for thorough fluid impregnation to SUPPRESS CORONA and to promote long life.

ORDERING INFORMATION

	MRC	370V	2
Series			
Voltage			
Capacitance			

* EIA Standard is 60,000 hours

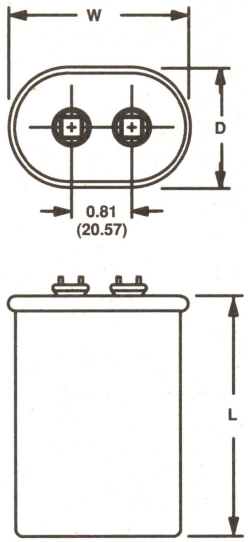

TERMINAL TYPE
Standard terminal 0.25 (6.35) wide x 0.032 (0.85) four blade quick disconnect universal type lugs of tin plated silicon bronze or brass.
NOTE: All dimensions ±0.06 (0.152)

DISSIPATION FACTOR VS. TEMPERATURE

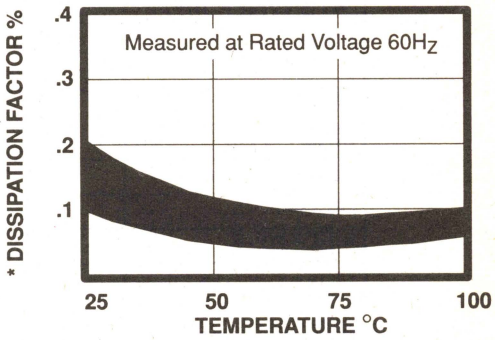

* NOTE – DF values after rated voltage is applied for 24 hours.

CAPACITANCE VS. TEMPERATURE

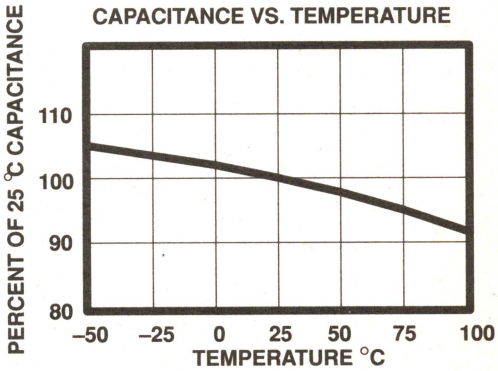

MOTOR RUN CAPACITORS

MRC SERIES

370VAC Ratings and Dimensions @ 70° Case Temp.

NTE Type Number	Capacitance mfd	Case Dimensions – Inch (mm)			Case Style
		W	D	L	
MRC370V2	2	2.16 (54.86)	1.31 (33.27)	2.00 (50.80)	A
MRC370V3	3	2.16 (54.86)	1.31 (33.27)	2.00 (50.80)	A
MRC370V4	4	2.16 (54.86)	1.31 (33.27)	2.00 (50.80)	A
MRC370V5	5	2.16 (54.86)	1.31 (33.27)	2.00 (50.80)	A
MRC370V6	6	2.16 (54.86)	1.31 (33.27)	2.00 (50.80)	A
MRC370V7R5	7.5	2.16 (54.86)	1.31 (33.27)	2.00 (50.80)	A
MRC370V10	10	2.16 (54.86)	1.31 (33.27)	2.50 (63.50)	A
MRC370V12R5	12.5	2.16 (54.86)	1.31 (33.27)	2.75 (69.85)	A
MRC370V15	15	2.16 (54.86)	1.31 (33.27)	3.00 (76.20)	A
MRC370V17R5	17.5	2.16 (54.86)	1.31 (33.27)	3.50 (88.90)	A
MRC370V20	20	2.16 (54.86)	1.31 (33.27)	4.00 (101.60)	A
MRC370V25	25	2.91 (73.91)	1.91 (48.51)	2.75 (69.85)	B
MRC370V30	30	2.91 (73.91)	1.91 (48.51)	3.25 (82.55)	B
MRC370V35	35	2.91 (73.91)	1.91 (48.51)	3.50 (88.90)	B
MRC370V40	40	3.66 (92.96)	1.97 (50.04)	3.25 (82.55)	C
MRC370V45	45	3.66 (92.96)	1.97 (50.04)	3.50 (88.90)	C
MRC370V50	50	3.66 (92.96)	1.97 (50.04)	3.75 (95.25)	C

440VAC Ratings and Dimensions @ 70° Case Temp.

NTE Type Number	Capacitance mfd	Case Dimensions – Inch (mm)			Case Style
		W	D	L	
MRC440V2	2	2.16 (54.86)	1.31 (33.27)	2.00 (50.80)	A
MRC440V3	3	2.16 (54.86)	1.31 (33.27)	2.00 (50.80)	A
MRC440V4	4	2.16 (54.86)	1.31 (33.27)	2.00 (50.80)	A
MRC440V5	5	2.16 (54.86)	1.31 (33.27)	2.00 (50.80)	A
MRC440V6	6	2.16 (54.86)	1.31 (33.27)	2.00 (50.80)	A
MRC440V7R5	7.5	2.16 (54.86)	1.31 (33.27)	2.25 (57.15)	A
MRC440V10	10	2.16 (54.86)	1.31 (33.27)	2.75 (69.85)	A
MRC440V12R5	12.5	2.16 (54.86)	1.31 (33.27)	2.75 (69.85)	A
MRC440V15	15	2.16 (54.86)	1.31 (33.27)	3.75 (95.25)	A
MRC440V17R5	17.5	2.16 (54.86)	1.31 (33.27)	3.75 (95.25)	A
MRC440V20	20	2.91 (73.91)	1.91 (48.51)	2.75 (69.85)	B
MRC440V25	25	2.91 (73.91)	1.91 (48.51)	3.25 (82.55)	B
MRC440V30	30	2.91 (73.91)	1.91 (48.51)	3.75 (95.25)	B
MRC440V35	35	2.91 (73.91)	1.91 (48.51)	3.25 (82.55)	C
MRC440V40	40	3.66 (92.96)	1.97 (50.04)	3.50 (88.90)	C
MRC440V45	45	3.66 (92.96)	1.97 (50.04)	4.00 (101.60)	C
MRC440V50	50	3.66 (92.96)	1.97 (50.04)	4.25 (107.95)	C
MRC440V55	55	3.66 (92.96)	1.97 (50.04)	4.50 (114.30)	C
MRC440V60	60	3.66 (92.96)	1.97 (50.04)	4.75 (120.65)	C

MOTOR START CAPACITORS

MSC SERIES

The MSC Series is a range of AC electrolytic capacitors. These capacitors are most often used to provide the torque necessary to start AC motors and in other intermittent AC applications.

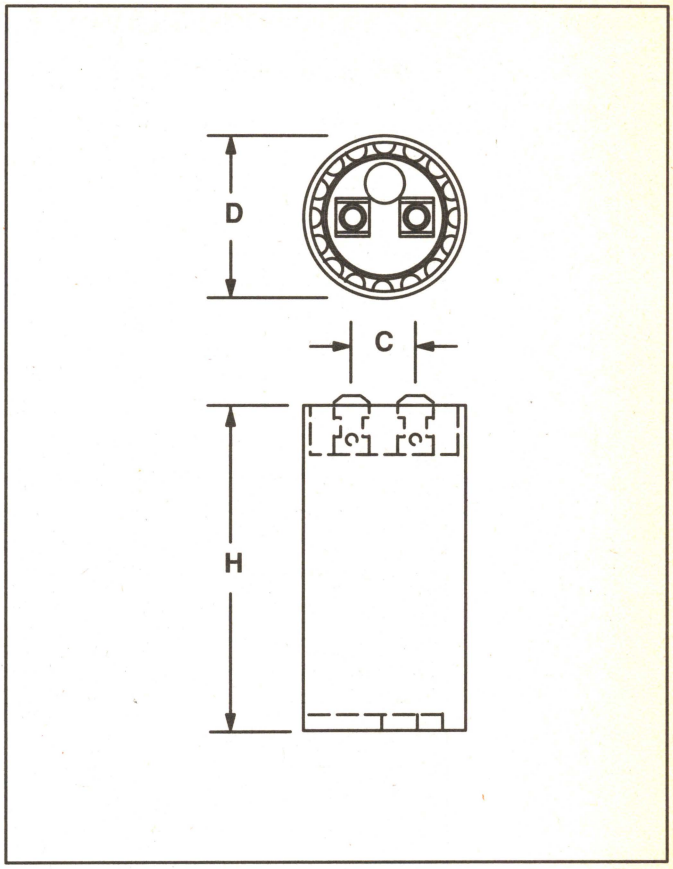

FEATURES:

- Two .25" Quick Connect terminals
- Round moisture and oil resistant plastic case
- 110VAC to 330VAC
- Quick disconnect terminals
- Recessed terminals
- Long life and high reliability

RATINGS

Capacitance Range:

110/125 Volts – 21mfd to 1200mfd

220/250 Volts – 21mfd to 324mfd

330 Volts – 21mfd to 259mfd

PERFORMANCE SPECIFICATIONS

Operating Temperature Range: –40°C to +65°C

Power Factor: 10% Max.; 12% ≤30mfd

Operating Frequency: 47 – 60H_Z

MOUNTING

Vertical mounting of the capacitor with the terminals up is recommended. However, horizontal mounting is acceptable providing the vent is located in the up position. Vertical mounting with the terminals down is not recommended because the capacitor life may be reduced and the operation of the pressure relief vent impaired.

CLEANING

Solvent residues on the capacitors after cleaning may penetrate the seal and cause internal corrosion resulting in shortened life. Alcohol or water detergent cleaning is not usually harmful but halogenated cleaning solvents are not recommended and should be avoided.

SAFETY

Because the watt–second value of these capacitors is high, precautions should be taken during the testing of these devices.

Discharge resistors should be specified when there is a possibility of a residual charge left on the capacitor or to protect contacts. Mis–application, such as exceeding design limits or applying continuous AC voltage, may result in destruction or explosion of capacitors.

ORDERING INFORMATION

MSC 125V 21

Series — MSC

Voltage — 125V

Capacitance — 21

MSC SERIES

110/125VAC Ratings and Dimensions

NTE Type Number	Capacitance mfd	Case Dimensions – Inch (mm)			Case Style
		D	H	C	
MSC125V21	21–25	1.438 (36.53)	2.75 (69.85)	0.50 (12.70)	E
MSC125V25	25–30	1.438 (36.53)	2.75 (69.85)	0.50 (12.70)	E
MSC125V30	30–36	1.438 (36.53)	2.75 (69.85)	0.50 (12.70)	E
MSC125V36	36–43	1.438 (36.53)	2.75 (69.85)	0.50 (12.70)	E
MSC125V43	43–52	1.438 (36.53)	2.75 (69.85)	0.50 (12.70)	E
MSC125V53	53–64	1.438 (36.53)	2.75 (69.85)	0.50 (12.70)	E
MSC125V72	72–86	1.438 (36.53)	2.75 (69.85)	0.50 (12.70)	E
MSC125V88	88–106	1.438 (36.53)	2.75 (69.85)	0.50 (12.70)	E
MSC125V108	108–130	1.438 (36.53)	2.75 (69.85)	0.50 (12.70)	E
MSC125V124	124–149	1.438 (36.53)	2.75 (69.85)	0.50 (12.70)	E
MSC125V145	145–174	1.438 (36.53)	2.75 (69.85)	0.50 (12.70)	E
MSC125V161	161–193	1.438 (36.53)	2.75 (69.85)	0.50 (12.70)	E
MSC125V189	189–227	1.438 (36.53)	2.75 (69.85)	0.50 (12.70)	E
MSC125V216	216–259	1.438 (36.53)	3.38 (85.85)	0.50 (12.70)	F
MSC125V233	233–280	1.438 (36.53)	3.38 (85.85)	0.50 (12.70)	F
MSC125V270	270–324	1.438 (36.53)	3.38 (85.85)	0.50 (12.70)	F
MSC125V324	324–389	1.438 (36.53)	4.38 (111.25)	0.50 (12.70)	G
MSC125V340	340–408	1.810 (45.97)	3.38 (85.85)	0.63 (16.00)	H
MSC125V378	378–454	1.810 (45.97)	3.38 (85.85)	0.63 (16.00)	H
MSC125V400	400–480	1.810 (45.97)	3.38 (85.85)	0.63 (16.00)	H
MSC125V460	460–552	1.810 (45.97)	3.38 (85.85)	0.63 (16.00)	H
MSC125V540	540–648	1.810 (45.97)	3.38 (85.85)	0.63 (16.00)	H
MSC125V590	590–708	1.810 (45.97)	4.38 (111.25)	0.63 (16.00)	J
MSC125V829	829–995	1.810 (45.97)	4.38 (111.25)	0.63 (16.00)	J
MSC125V1000	1000–1200	2.060 (52.32)	4.38 (111.25)	0.88 (22.35)	K

220/250VAC Ratings and Dimensions

NTE Type Number	Capacitance mfd	Case Dimensions – Inch (mm)			Case Style
		D	H	C	
MSC250V21	21–25	1.438 (36.53)	2.75 (69.85)	0.50 (12.70)	E
MSC250V25	25–30	1.438 (36.53)	2.75 (69.85)	0.50 (12.70)	E
MSC250V30	30–36	1.438 (36.53)	2.75 (69.85)	0.50 (12.70)	E
MSC250V36	36–43	1.438 (36.53)	2.75 (69.85)	0.50 (12.70)	E
MSC250V43	43–52	1.810 (45.97)	3.38 (85.85)	0.50 (12.70)	F
MSC250V53	53–64	1.810 (45.97)	3.38 (85.85)	0.50 (12.70)	F
MSC250V72	72–86	1.810 (45.97)	3.38 (85.85)	0.63 (16.00)	H
MSC250V88	88–106	1.810 (45.97)	3.38 (85.85)	0.63 (16.00)	H
MSC250V108	108–130	1.810 (45.97)	3.38 (85.85)	0.63 (16.00)	H
MSC250V124	124–149	1.810 (45.97)	4.38 (111.25)	0.63 (16.00)	J
MSC250V130	130–156	1.810 (45.97)	4.38 (111.25)	0.63 (16.00)	J
MSC250V145	145–174	1.810 (45.97)	4.38 (111.25)	0.63 (16.00)	J
MSC250V161	161–193	2.060 (52.32)	4.38 (111.25)	0.88 (22.35)	K
MSC250V189	189–227	2.060 (52.32)	4.38 (111.25)	0.88 (22.35)	K
MSC250V216	216–259	2.060 (52.32)	4.38 (111.25)	0.88 (22.35)	K
MSC250V233	233–280	2.060 (52.32)	4.38 (111.25)	0.88 (22.35)	K
MSC250V270	270–324	2.060 (52.32)	4.38 (111.25)	0.88 (22.35)	K

MSC SERIES

330VAC Ratings and Dimensions

NTE Type Number	Capacitance mfd	Case Dimensions – Inch (mm)			Case Style
		D	H	C	
MSC330V21	21–25	1.438 (36.53)	2.75 (69.85)	0.50 (12.70)	E
MSC330V25	25–30	1.438 (36.53)	2.75 (69.85)	0.50 (12.70)	F
MSC330V30	30–36	1.438 (36.53)	2.75 (69.85)	0.50 (12.70)	F
MSC330V36	36–43	1.438 (36.53)	2.75 (69.85)	0.50 (12.70)	F
MSC330V43	43–52	1.438 (36.53)	3.38 (85.85)	0.50 (12.70)	F
MSC330V53	53–64	1.810 (45.97)	3.38 (85.85)	0.63 (16.00)	H
MSC330V72	72–86	1.810 (45.97)	4.38 (111.25)	0.63 (16.00)	J
MSC330V88	88–106	1.810 (45.97)	4.38 (111.25)	0.63 (16.00)	J
MSC330V108	108–130	2.060 (52.32)	4.38 (111.25)	0.88 (22.35)	K
MSC330V124	124–149	2.560 (65.02)	4.38 (111.25)	0.88 (22.35)	K
MSC330V145	145–174	2.060 (52.32)	4.38 (111.25)	0.88 (22.35)	K
MSC330V161	161–193	2.560 (65.02)	4.38 (111.25)	0.88 (22.35)	L
MSC330V189	189–227	2.560 (65.02)	4.38 (111.25)	0.88 (22.35)	L
MSC330V216	216–259	2.560 (65.02)	4.38 (111.25)	0.88 (22.35)	L

CEILING FAN CAPACITORS

CFC SERIES

The CFC series is a range of metallized polyester film capacitors designed expressly for ceiling fan use. They are a self–healing flat capacitor winding with polyester film dielectric. They are mounted in a flame retardent plastic case with an epoxy resin end–seal. The CFC series are also used in other electric fans and in fluorescent lamps.

The NTE CFC series is available in 2 wire (single) and 3 wire (dual) capacitor versions.

FEATURES:

- Small size/light weight
- High Insulation resistance
- Small dissipation factor

RATINGS

Capacitance Range:

2 wire 125/250VAC – 1µfd to 6µfd

3 wire 125/250VAC – 2/4µfd to 6/14µfd

PERFORMANCE SPECIFICATIONS

Operating Temperature Range: –25°C to +70°C

Insulation Resistance (at 20°C):

Between Terminals: ≥ 1000MΩ

Between Terminals and Case: ≥ 2000MΩ

2 WIRE SERIES

NTE Type No.	Cap µf	Case Dimensions – inch (mm)		
		W	H	T
CFC–1	1.0	1.260 (32)	.826 (21)	.413 (10.5)
CFC–2	2.0	1.260 (32)	.826 (21)	.413 (10.5)
CFC–3	3.0	1.260 (32)	.905 (23)	.512 (13)
CFC–4	4.0	1.535 (39)	.905 (23)	.512 (13)
CFC–5	5.0	1.535 (39)	.945 (24)	.590 (15)
CFC–6	6.0	1.535 (39)	1.020 (26)	.669 (17)

3 WIRE SERIES

NTE Type No.	Cap µf	Case Dimensions – inch (mm)		
		W	H	T
CFC–2/4	2.0/4.0	1.535 (39)	1.141 (29)	.748 (19)
CFC–2/5.5	2.0/5.5	1.978 (50)	1.180 (30)	.787 (20)
CFC–3/6.5	3.0/6.5	2.017 (51)	1.258 (32)	.866 (22)
CFC–3.5/1.5	3.5/1.5	1.535 (39)	1.141 (29)	.748 (19)
CFC–5/8.2	5.0/8.2	2.017 (51)	1.574 (40)	1.180 (30)
CFC–6/14	6.0/14	2.017 (51)	1.574 (40)	1.180 (30)

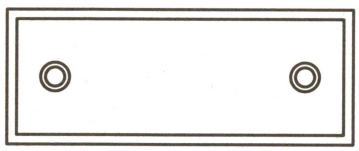

2 Wire Series

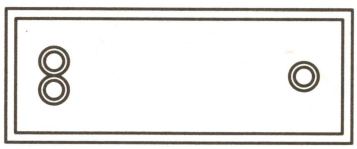

3 Wire Series

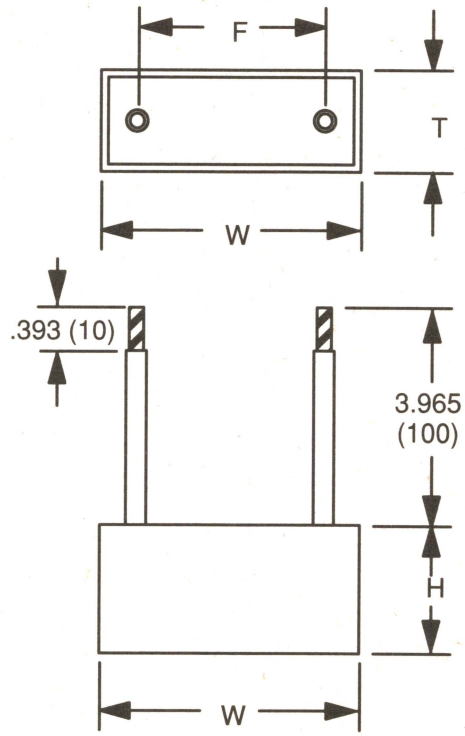

NOTE: F (lead space) = W – .196 (5.0) ±.039 (1.0)

ACCESSORIES

NTE Type Number	Diagram Number	Quantity Per Pkg	SEMICONDUCTOR HEAT SINKS
NTE400	362	2	Heat Sink for TO5/TO39 Type Package
NTE401	352	2	Heat Sink for TO5/TO39 Type Package
NTE402	363	2	Heat Sink for Mounting 2 Plastic Power Types (TO3P, TO126, TO127, TO202, TO218, TO220)
NTE403	364	2	Heat Sink for Mounting 1 Plastic Power Type (TO3P, TO126, TO127, TO202, TO218, TO220)
NTE404	365	1	Heat Sink for TO66 Type Package (Includes Base and Top Piece)
NTE405	366	1	Heat Sink for TO3 Type Package (Includes Base and Top Piece)
NTE406	373	2	Heat Sink for TO202 Type Package
NTE406A	–	2	Heat Sink for TO220 Type Package
NTE410	354	2	Heat Sink for TO1 Type Package
NTE411	345	2	Stud Mount Heat Sink for TO5/TO39 Type Package
NTE412	367	2	Heat Sink for TO18 Type Package
NTE440A	520	1	Heat Sink, Undrilled Mounting Surface
NTE440B	520	1	Heat Sink, Drilled Mounting Surface for TO3, TO48, TO66, TO126, TO127, TO220, DO5 Type Packages
NTE440C	520	1	Heat Sink, Drilled Mounting Surface for TO3, TO36, TO64, DO4 Type Packages
NTE441A	521	1	Heat Sink, Drilled Mounting Surface for Solid State Relays
NTE441B	521	1	Heat Sink, Undrilled Mounting Surface
NTE442C	–	1	Heat Sink, Undrilled Mounting Surface
NTE448B	425	2	Heat Sink for 14/16 Lead DIP Type Package
NTE448E	426	2	Heat Sink for 24 Lead DIP Type Package
NTE448G	427	2	Heat Sink for 40 Lead DIP Type Package
NTE450A	420	1	Heat Sink for 14 Lead DIP Type Package
			HEAT SINK COMPOUND
NTE303	482	5	Thermal Compound, 1 Gram/Tube
			INSULATOR KITS **(Each Kit Includes Mica Insulator & Nylon Bushings)**
NTE413	–	2	Insulator Kit for TO3 Type Package
NTE414	–	2	Insulator Kit for TO36 Type Package (Includes Lock Washer, Solder Lug, Nut, and Plastic Insulating Tube)
NTE415	–	2	Insulator Kit for TO66 Type Package
NTE422	–	2	Insulator Kit for TO220 (Plastic TO66) Type Package
NTE438	–	1	Insulator Kit for DO4/TO64 Stud Type Package (Includes Flat Washer, Solder Lug, and Nut)
NTE439	–	1	Insulator Kit for DO5/TO48 Stud Type Package (Includes Flat Washer, Lock Washer, Solder Lug, and Nut)
			SOCKETS
NTE209	355	2	Socket for TO3 Type Package
NTE409	356	2	Socket for 14 Lead DIP Type Package
NTE416	357	2	Socket for 16 Lead DIP Type Package
NTE417	368	2	Socket for 3 Lead TO18 Type Package
NTE418	369	2	Socket for 4 Lead TO18 Type Package
NTE419	370	2	Socket for 3 Lead TO5 Type Package
NTE421	372	2	Socket for TO66 Type Package
NTE423	353	2	Socket for 8 Lead DIP Type Package
NTE428	358	2	Socket for 24 Lead DIP Type Package
NTE429	359	2	Socket for 28 Lead DIP Type Package

See Diagrams, beginning on Page 1–352

ACCESSORIES

NTE Type Number	Diagram Number	Quantity Per Pkg	SOCKETS (Cont'd)
NTE430	360	1	Socket for 40 Lead DIP Type Package
NTE435K28	–	2	Socket for 28 Lead DIP Type Package, 0.070 (1.78) Lead Spacing
NTE435K30	–	2	Socket for 30 Lead DIP Type Package, 0.070 (1.78) Lead Spacing
NTE435K42	–	1	Socket for 42 Lead DIP Type Package, 0.070 (1.78) Lead Spacing
NTE435K64	–	1	Socket for 64 Lead DIP Type Package, 0.070 (1.78) Lead Spacing
NTE435P6	524	2	Socket for 6 Lead DIP Type Package
NTE435P18	374	2	Socket for 18 Lead DIP Type Package
NTE435P20	375	2	Socket for 20 Lead DIP Type Package
NTE435P22	376	2	Socket for 22 Lead DIP Type Package
NTE436W8	525	2	Socket for 8 Lead DIP Type Package, Wire Wrap Leads
NTE436W14	526	2	Socket for 14 Lead DIP Type Package, Wire Wrap Leads
NTE436W16	527	2	Socket for 16 Lead DIP Type Package, Wire Wrap Leads
NTE436W18	528	2	Socket for 18 Lead DIP Type Package, Wire Wrap Leads
NTE436W20	529	1	Socket for 20 Lead DIP Type Package, Wire Wrap Leads
NTE436W22	530	1	Socket for 22 Lead DIP Type Package, Wire Wrap Leads
NTE436W24	531	1	Socket for 24 Lead DIP Type Package, Wire Wrap Leads
NTE436W28	532	1	Socket for 28 Lead DIP Type Package, Wire Wrap Leads
NTE436W40	533	1	Socket for 40 Lead DIP Type Package, Wire Wrap Leads
			HARDWARE
NTE426	–	2	Metric Hardware Kit (Includes 3mm Nuts and Bolts)
NTE432	361	2	Thread Converter (Converts 3/8–24 to 1/2–20)
NTE433	418	1	High Voltage Splices for CRT Anode Leads (40KV Insulation)

DIMENSIONAL OUTLINE DRAWINGS

Diagram 345

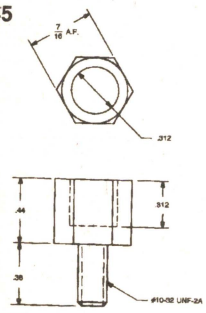

Diagram 352

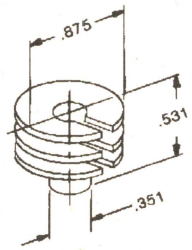

Diagram 353

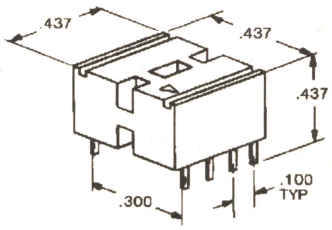

Diagram 354

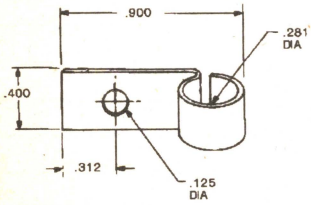

Diagram 355

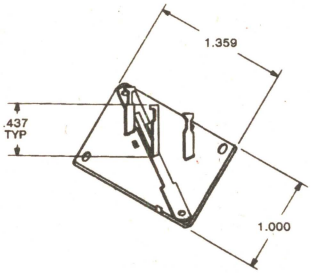

Diagram 356

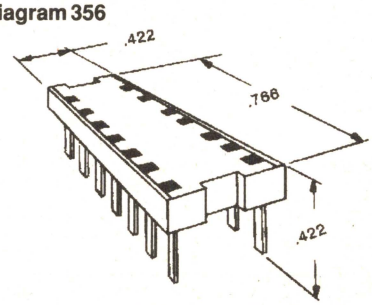

Diagram 357

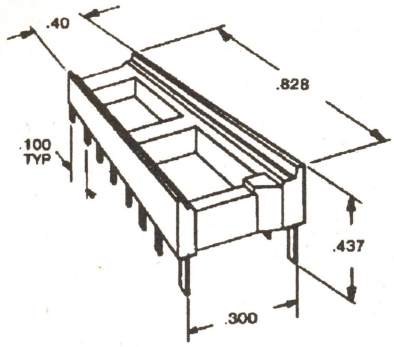

Diagram 358

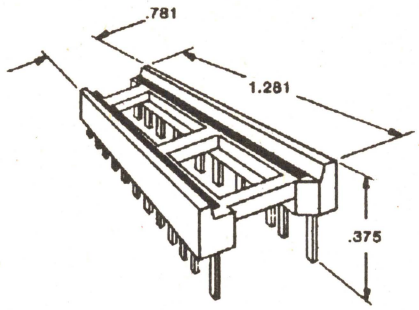

Diagram 359

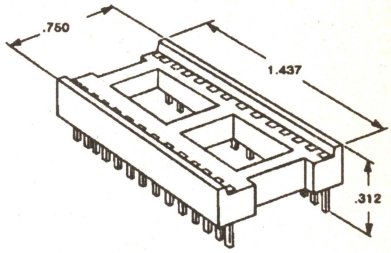

Diagram 360

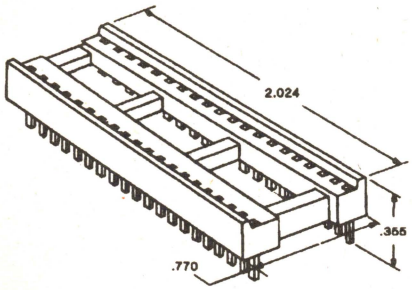

Diagram 361

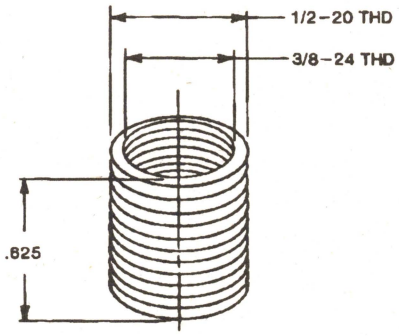

Diagram 362

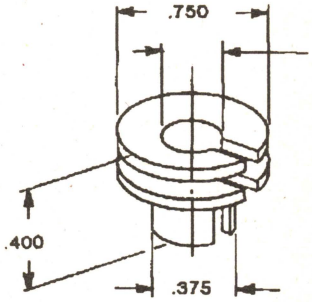

Diagram 363

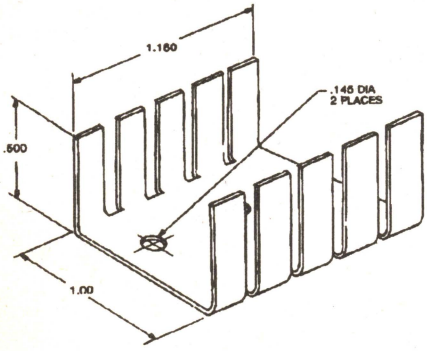

Diagram 364

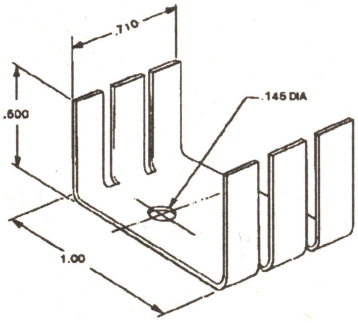

Diagram 365

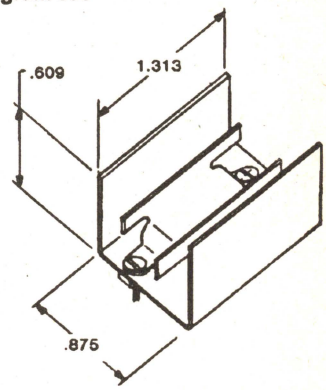

Diagram 366

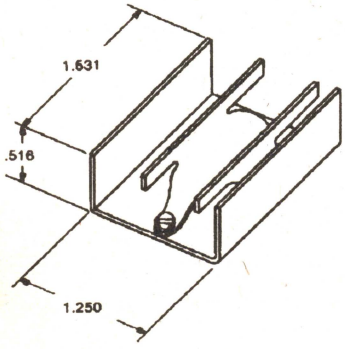

Diagram 367

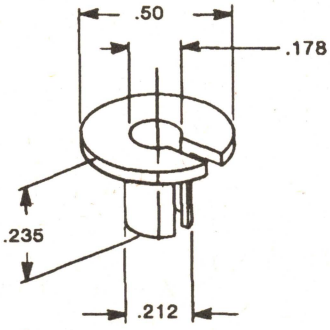

Diagram 368

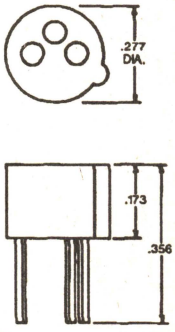

DIMENSIONAL OUTLINE DRAWINGS

Diagram 369

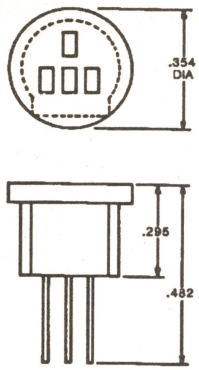

Diagram 370

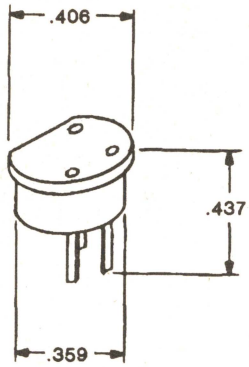

Diagram 372

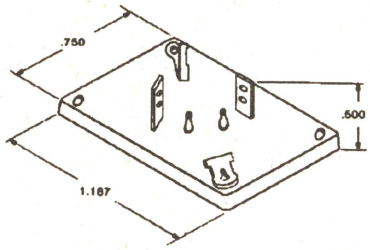

Diagram 373

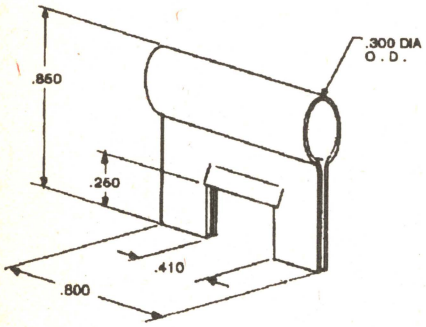

Diagram 374

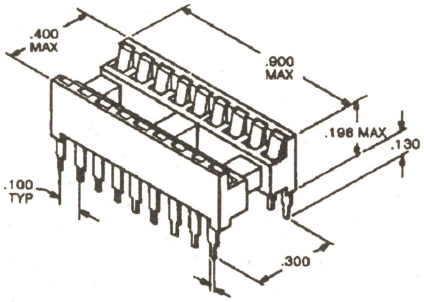

Diagram 375

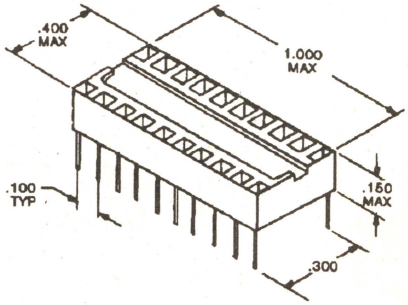

Diagram 376

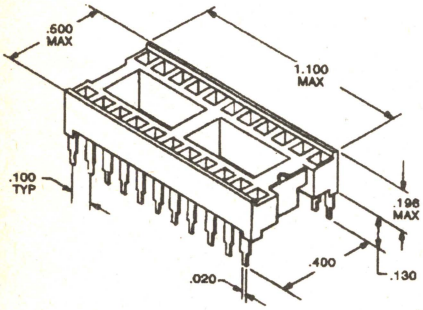

Diagram 418

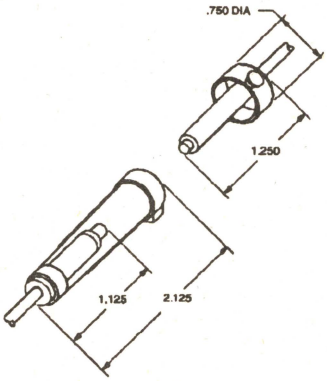

Diagram 420

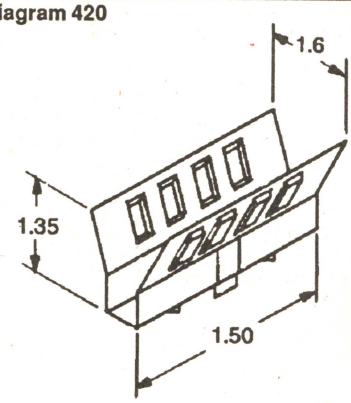

Diagram 425

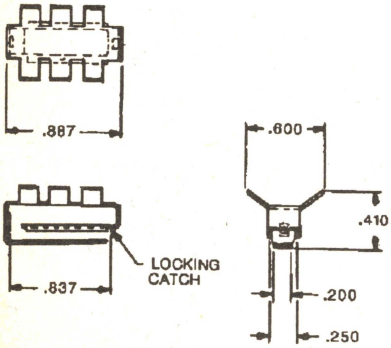

Diagram 426

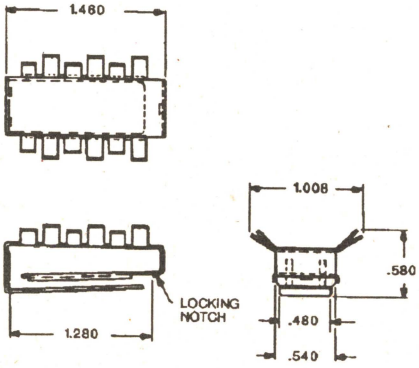

Diagram 427

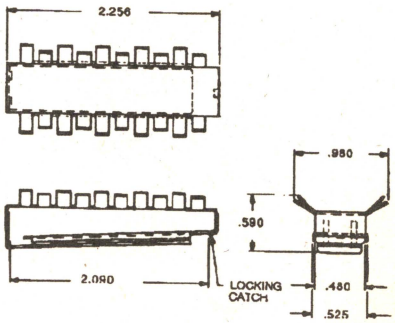

Diagram 482

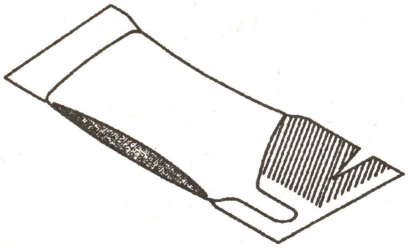

Diagram 520

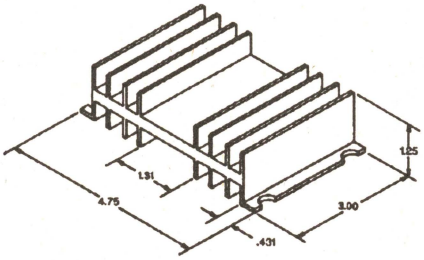

Diagram 521

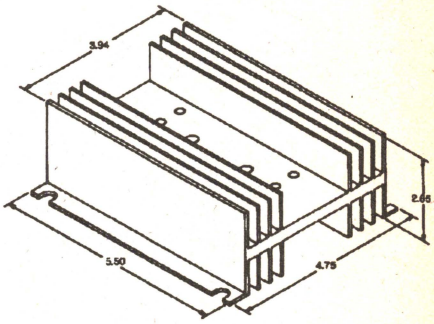

Diagram 524

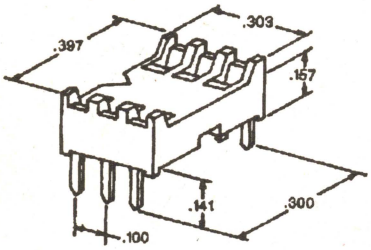

Diagram 525

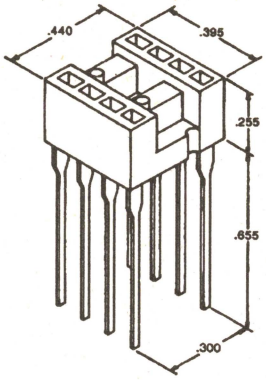

Diagram 526

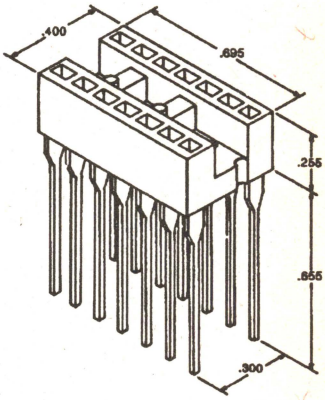

Diagram 527

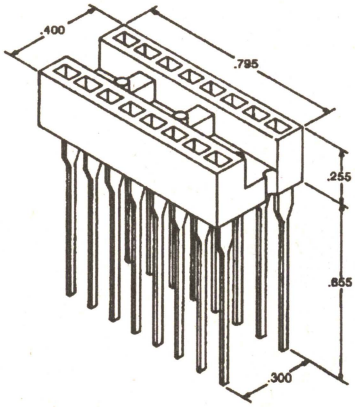

Diagram 528

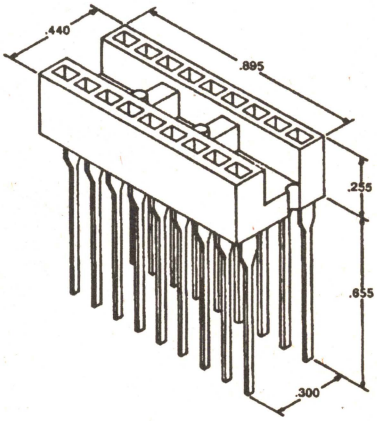

Diagram 529

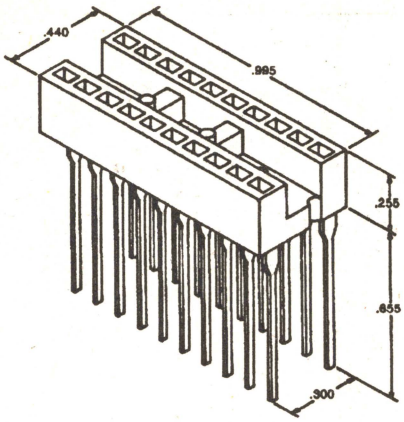

Diagram 530

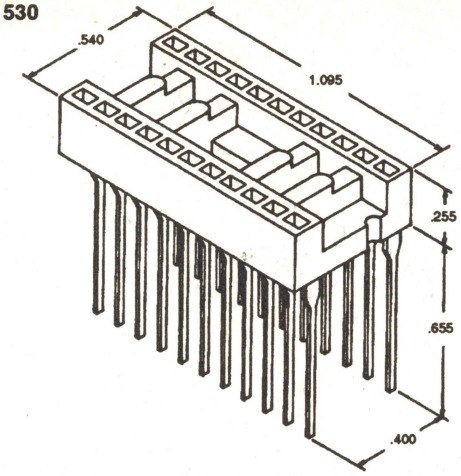

Diagram 531

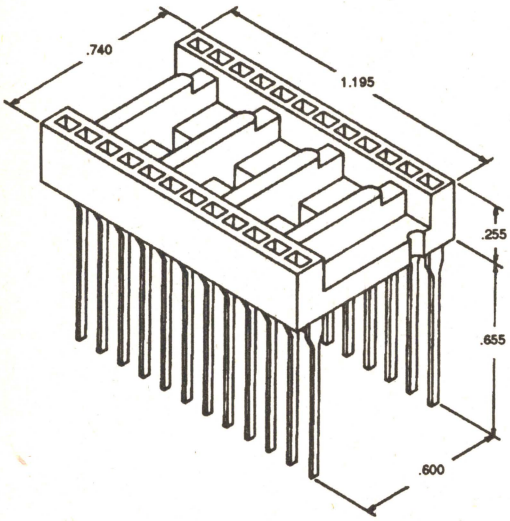

Diagram 532

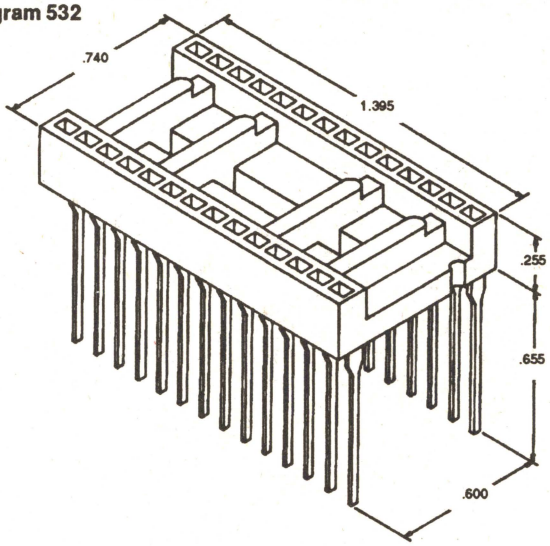

Diagram 533

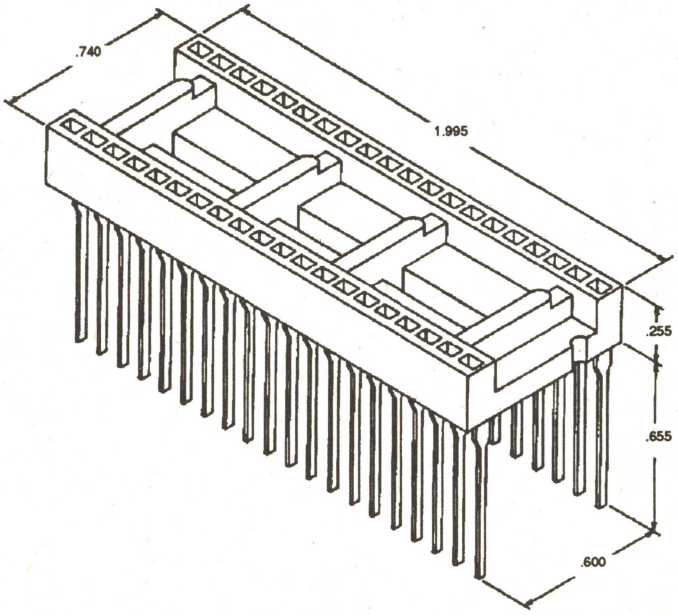

NTE539 = When replacing part numbers 530165–12, MH1011B01, and MH1031C01 with NTE539, cut the "G" lead at the surface of the failed multiplier. Strip and connect to the "G" terminal of the replacement multiplier.

NTE1081A = When an NTE1081A is used to replace a UPC563H, the following modifications must be performed:

1. The 680Ω resistor from Pin3 and Pin4 along with Diode SD45 or 1S953 must be removed.
2. The 10kΩ resistor at Pin9 must be removed.
3. The 220pF capacitor must be changed to 47pF. This capacitor is located between Pin4 and Pin5.
4. Connect the heat sink fin to ground.

The NTE1081A directly replaces the UPC563H2 just by grounding the heat sink.

NTE1091 = To replace a UPC48C with an NTE1091, connect a 3.3kΩ, 1/2W resistor between Pin15 and ground.

NTE1140 = To replace a UPC575C with an NTE1140, the following modifications must be performed:

1. If there is a resistor between Pin5 and Pin6, remove it.
2. Remove any existing resistor between Pin8 and ground.
3. Connect a 47µF capacitor from Pin8 to ground.

NOTE: There are no required modifications when replacing a UPC575C2 with an NTE1140.

NTE123A = To replace a 13–17–6 transistor with an NTE123A, place a 15kΩ resistor from the base of the NTE123A to ground.

NTE1218 = The STK413 and STK415 are discontinued devices and are not directly replaceable. To replace these devices with an NTE1218, the following modifications must be performed (See Figure 1):

1. Pin6 (L Ch) and Pin12 (R Ch) must be disconnected from their loads. In some cases, this may involve cutting out a section of foil on the PC board.
2. The 15Ω resistors in series with the capacitors from Pin2 to ground and from Pin14 to ground must be removed and replaced with 120Ω resistors.
3. A 12kΩ resistor must be placed between Pin2 and Pin5, and a 12kΩ resistor must be placed between Pin11 and Pin14.
4. Between Pin5 and Pin6, connect a 47µF, 16V capacitor, and between Pin10 and Pin11, connect a 47µF, 16V capacitor.

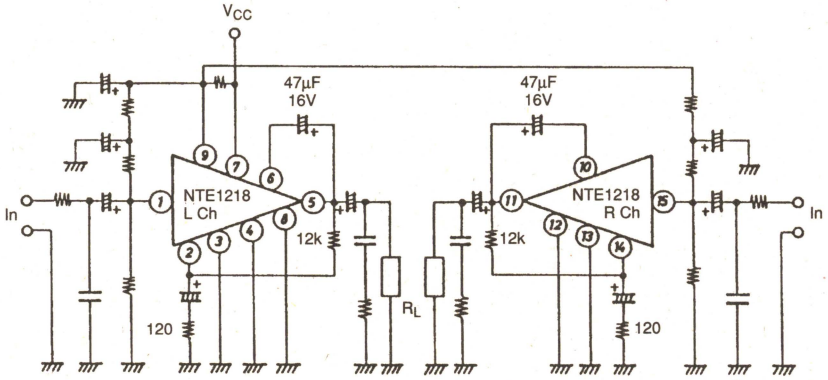

Figure 1

NTE1115A = The TBA810S–H is replaced by an NTE1115A with the following change: A 100Ω, 1/4W resistor must be connected between Pin1 and Pin4.

NTE159 = Two (2) NTE159 transistors may be used to replace a UPA41C. (See Figure 2)

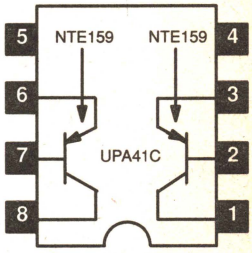

Figure 2

NOTES

NOTES

NOTES

NOTES

NOTES

NOTES

NOTES

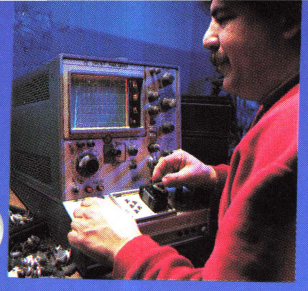

◀ NTE parts are quality tested to consistently assure that MROs and OEMs receive parts that meet or exceed industry specifications.

QUALITY

◀ NTE's warehouse is stocked with substantial supplies of each of our parts to provide off-the-shelf availability.

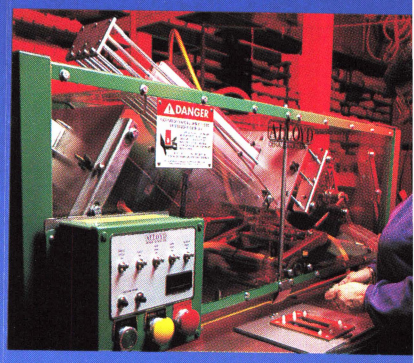

▲ NTE blister-packs products in attractive eas identify packaging to provide eye-catching in-s merchandising.

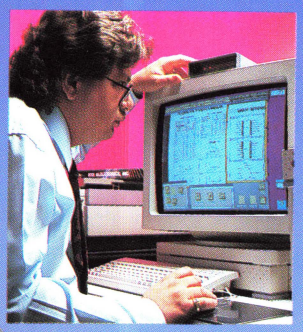

◀ NTE's Technical Services Department constantly updates literature to provide end-users with the most current technical assistance on all components in the vast NTE line. For technical assistance, call 1-800-631-1250 nationwide.

NTE's responsive service force uses sophisticated order processing and inventory control systems to shorten turnaround time and provide customers with real-time information. ▶

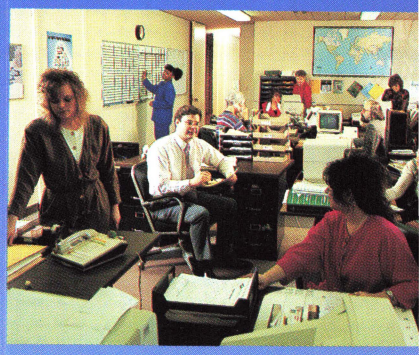

SERVICE

◀ NTE has grown from a company with ten parts in its line to one of the nation's top semiconducto suppliers offering over 3,550 components.

VALUE

◀ NTE's 35,000 square foot headquarters in Bloomfield, NJ houses under one roof, all the essential services and inventory to continually supply replaceme components to distributors in th United States, Canada, Latin America, the Caribbean, Europe and the Middle East.

WHOOSSHHH!

THE FASTEST, EASIEST CROSS-REFERENCING OF ORIGINAL DEVICES TO NTE REPLACEMENT PARTS!

NTE'S NEW SOFTWARE

QUICK Cross™

"*QUICK Cross*" is the industry's first PC-based software cross-reference to NTE's highly successful line of semiconductors and relays!

Just type in any of a quarter of a million industry device numbers — U.S., Japanese, and European — and you'll get the ideal replacement from over 4,750 NTE devices *in about one second!*

All NTE parts carry a two-year warranty and most are available off the shelf.

"*QUICK Cross*" 5¼" and 3½" floppy diskette MS-DOS versions are available direct from NTE or through your local NTE distributor. For your nearest one, call NTE toll-free 1-800-631-1250 (including Canada) or (201) 748-5089. FAX: (201) 748-6224.

NTE®

NTE ELECTRONICS, INC.

A WORLDWIDE REPUTATION FOR QUALITY, SERVICE AND VALUE

USE BUSINESS REPLY CARD AT END OF CATALOG

☐ YES, PLEASE SEND ME THE FOLLOWING NUMBER OF COPIES OF "*QUICK Cross*" SOFTWARE ON FLOPPY DISKETTES:

____5¼" (1.2M) $5.00 ea.

____5¼" (3[illegible]) [illegible] ea.

Enclosed please [illegible] check or money order for $_____ ([illegible] funds only.)

Name_____

Company_____

Address_____

City_____ State_____ Zip_____

Attach this coupon to your letterhead and mail to:

NTE, 44 Farrand St., Bloomfield, NJ 07003

"*QUICK Cross*" software runs in MS-DOS on any IBM PC or compatible with 640K of RAM, a small hard drive, and a 5¼" or a 3½" floppy drive. NTE's database occupies only 2.1 Mbytes of hard disk space when loaded. It is a public domain release.

MS-DOS is a registered trademark of Microsoft Corporation.

IBM is a registered trademark of International Business Machines.

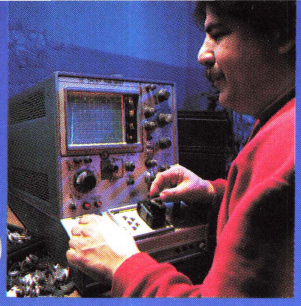

◀ NTE parts are quality tested to consistently assure that MROs and OEMs receive parts that meet or exceed industry specifications.

QUALITY

▲ NTE blister-packs products in attractive easy-to-identify packaging to provide eye-catching in-store merchandising.

◀ NTE's warehouse is stocked with substantial supplies of each of our parts to provide off-the-shelf availability.

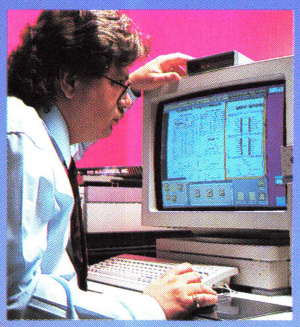

◀ NTE's Technical Services Department constantly updates literature to provide end-users with the most current technical assistance on all components in the vast NTE line. For technical assistance, call 1-800-631-1250 nationwide.

NTE's responsive service force ▶ uses sophisticated order processing and inventory control systems to shorten turnaround time and provide customers with real-time information.

SERVICE

◀ NTE has grown from a company with ten parts in its line to one of the nation's top semiconductor suppliers offering over 3,550 components.

VALUE

◀ NTE's 35,000 square foot headquarters in Bloomfield, NJ houses under one roof, all the essential services and inventory to continually supply replacement components to distributors in the United States, Canada, Latin America, the Caribbean, Europe and the Middle East.

WHOOSSHHH!

THE FASTEST, EASIEST CROSS-REFERENCING OF ORIGINAL DEVICES TO NTE REPLACEMENT PARTS!

NTE'S NEW SOFTWARE

QUICK Cross™

"*QUICK Cross*" is the industry's first PC-based software cross-reference to NTE's highly successful line of semiconductors and relays!

Just type in any of a quarter of a million industry device numbers — U.S., Japanese, and European — and you'll get the ideal replacement from over 4,750 NTE devices *in about one second!*

All NTE parts carry a two-year warranty and most are available off the shelf.

"*QUICK Cross*" 5¼" and 3½" floppy diskette MS-DOS versions are available direct from NTE or through your local NTE distributor. For your nearest one, call NTE toll-free 1-800-631-1250 (including Canada) or (201) 748-5089. FAX: (201) 748-6224.

NTE®

NTE ELECTRONICS, INC.

A WORLDWIDE REPUTATION FOR QUALITY, SERVICE AND VALUE

USE BUSINESS REPLY CARD AT END OF CATALOG

☐ YES, PLEASE SEND ME THE FOLLOWING NUMBER OF COPIES OF "*QUICK Cross*" SOFTWARE ON FLOPPY DISKETTES:

____5¼" (1.2M) $5.00 ea.

____5¼" (3[illegible] ea.

Enclosed please [illegible] check or money order for $_____ (US funds only.)

Name_____

Company_____

Address_____

City_____ State_____ Zip_____

Attach this coupon to your letterhead and mail to:

NTE, 44 Farrand St., Bloomfield, NJ 07003

"*QUICK Cross*" software runs in MS-DOS on any IBM PC or compatible with 640K of RAM, a small hard drive, and a 5¼" or a 3½" floppy drive. NTE's database occupies only 2.1 Mbytes of hard disk space when loaded. It is a public domain release.

MS-DOS is a registered trademark of Microsoft Corporation.
IBM is a registered trademark of International Business Machines.

USING THE NTE CROSS REFERENCE GUIDE

NTE uses its own simplified computer sorting system. Parts starting with the a letter precede those starting with a number.

Example: A thru Z, then 0 thru 9

1. Parts starting with a decimal point or any other special characters are listed first:

   EXAMPLE: .4M4.3AZ5
   .7J2100
   .MZ110B
   (IR) 2SB187

2. Parts starting with a letter are listed in alphabetical order of the letters occurring before a dash or number:

   EXAMPLE: MPS–A56
   MPSA56

3. Parts starting with a number are listed in order of the numbers occurring before a dash or letter:

   EXAMPLE: 1D6
   1M3.6AZ5
   1N4331

4. Devices beginning with a . (decimal point) may be found on the first page (2–2) of this cross reference.

5. Some part numbers frequently misread are:

   A. Zero for the letter "O" and vice–versa
   B. One for the letter "I" or vice–versa
   C. The Greek letter (μ) may be found under (U)

6. The following are special notes which may appear after the NTE replacement number:

   + Rotate device 180 ° to conform with original lead configuration.
   @ Minor mechanical difference exist, but device will fit most applications.
   # Minor electrical difference exist, but device will function in most applications.
   * Lead configuration may vary from the original device. Consult technical section for device outline.
   ( ) More than one device is required to replace the original.
   $ NTE1570 is for transistor tuner only. If unit contains an FET tuner, use NTE1572
   % Must us the insulating hardware supplied.
   & Refer to Special replacement section on page. 1–355

NTE Replacement Guide

FROM .2KT12.8A TO .7ZM68B

PART NUMBER	NTE REPLACEMENT
.2KT12.8A	143A
.4M2.4AZ5	5000A
.4M2.4AZ10	5000A
.4M2.7AZ5	5002A
.4M2.7AZ10	5002A
.4M3.0AZ10	5004A
.4M3.0AZ5	5004A
.4M3.0ZA10	5004A
.4M3.3AZ10	5005A
.4M3.3AZ5	5066A
.4M3.6AZ10	5006A
.4M3.6AZ5	134A
.4M3.9AZ10	5007A
.4M3.9AZ5	5067A
.4M4.3AZ10	5008A
.4M4.3AZ5	5008A
.4M4.7AZ10	5009A
.4M4.7AZ5	5069A
.4M5.1AZ1	5010T1
.4M5.1AZ10	5010A
.4M5.1AZ2	5010T1
.4M5.1AZ5	5010A
.4M5.6AZ1	5011T1
.4M5.6AZ2	5011T1
.4M5.6AZ5	5011A
.4M5.6Z10	5011A
.4M6.2AZ10	5013A
.4M6.2AZ2	5013T1
.4M6.2AZ1	5013T1
.4M6.8AZ10	5014A
.4M6.8Z	5014A
.4M7.5AZ10	5015A
.4M7.5Z	5015A
.4M8.2AZ10	5016A
.4M8.27	5016A
.4M9.1AZ10	5018A
.4M9.1Z	5018A
.4M10AZ1	5019T1
.4M10AZ2	5019T1
.4M10AZ10	5019A
.4M10Z	5019A
.4M11Z	5020A
.4M12AZ1	5021T1
.4M12AZ2	5021T1
.4M12AZ10	5021A
.4M12Z	5021A
.4M13Z	5022A
.4M13Z5	143A
.4M15Z	5024A
.4M16Z	5025A
.4M16Z5	5075A
.4M18Z	5027A
.4M18Z5	5077A
.4M20Z	5029A
.4M22Z	5030A
.4M24Z	5031A
.4M27Z	5033A
.4M27Z5	5033A
.4M30Z	5034A
.4M30Z5	5084A
.4M33Z	5036A
.4M36Z	5037A
.4M39Z	5038A
.4M39Z5	5038A
.4M43Z	5039A
.4M47Z	5040A
.4M51Z	5041A
.4M56Z	5042A
.4M62Z	5044A
.4M68Z	5045A
.4M75Z	5046A
.4M82Z	5047A
.4M91Z	5049A
.4M100Z	5050A
.4M110Z	5051A
.4M120Z	5052A
.4M130Z	5053A
.4M150Z	5055A
.4M160Z	5056A
.4M180Z	5058A
.4M200Z	5060A
.4T5.6	136A
.4T5.6A	136A
.4T5.6B	136A
.4T6.2	137A
.4T6.2A	137A
.4T6.2B	137A
.4T6.8	5071A
.4T6.8A	137A
.4T6.8B	5071A
.4T7.5	138A
.4T7.5A	138A
.4T7.5B	138A
.4T8.2	5072A
.4T8.2A	5072A
.4T8.2B	5072A
.4T9.1	139A
.4T9.1A	139A
.4T9.1B	139A
.4T10	140A
.4T10A	140A
.4T10B	140A
.4T11	5074A
.4T11.5	141A
.4T11.5A	141A
.4T11A	5074A
.4T11B	5074A
.4T12	5021A
.4T12.8	143A
.4T12.8A	143A
.4T12A	142A
.4T12B	142A
.4T13	143A
.4T13A	143A
.4T13B	143A
.4T14	144A
.4T14A	144A
.4T15	145A
.4T15A	5024A
.4T15B	145A
.4T16	5075A
.4T16A	5075A
.4T16B	5075A
.4T18	5077A
.4T18A	5077A
.4T18B	5077A
.4T20	5079A
.4T20A	5079A
.4T20B	5079A
.4T22	5080A
.4T22A	5080A
.4T22B	5080A
.4T22V	5080A
.4T24	5081A
.4T24A	5081A
.4T24B	5081A
.4T27	146A
.4T27A	146A
.4T27B	146A
.4T30	5035A
.4T30A	5084A
.4T30B	5084A
.4T33	147A
.4T33A	147A
.4T33B	147A
.4T36	5085A
.4T36A	5085A
.4T36B	5085A
.4T39	5086A
.4T39A	5086A
.4T39B	5086A
.4T43	5087A
.4T43A	5087A
.4T43B	5087A
.4T47	5088A
.4T47A	5088A
.4T47B	5088A
.4T51	5089A
.4T51A	5089A
.4T51B	5089A
.4T55	148A
.4T55A	148A
.4T56	5090A
.4T56A	5090A
.4T56B	5090A
.4T62	149A
.4T62A	149A
.4T62B	149A
.4T68	5092A
.4T68A	5092A
.4T68B	5092A
.4T75	5093A
.4T75A	5093A
.4T75B	5093A
.4T82	150A
.4T82A	150A
.4T82B	150A
.4T91	5095A
.4T91A	5095A
.4T91B	5095A
.4T100	5096A
.4T100A	5096A
.4T100B	5096A
.4T110	151A
.4T110A	151A
.4T110B	5096A
.4T120	5097A
.4T120A	5097A
.4T120B	5097A
.4T130	5098A
.4T130A	5098A
.4T130B	5098A
.4T150	5100A
.4T150A	5100A
.4T150B	5100A
.4T160	5101A
.4T160A	5101A
.4T160B	5101A
.4T180	5103A
.4T180A	5103A
.4T180B	5103A
.4T200	5105A
.4T200A	5105A
.4T200B	5105A
.4T688	5092A
.5E05	116
.5E1	116
.5E2	116
.5E3	116
.5E4	116
.5E5	116
.5E6	116
.5E7	125
.5E8	125
.5E10	125
.5E12	506
.5J05	116
.5J1	116
.5J2	116
.5J3	116
.5J4	116
.5J5	116
.5J6	116
.5J7	125
.5J8	125
.5J10	125
.5J12	506
.5M2.4ZS5	5000A
.5M2.5ZS10	5000A
.5M2.7ZS10	5001A
.5M2.8ZS10	5002A
.5M2.8ZS5	5003A
.5M3.0ZS10	5004A
.5M3.0ZS5	5004A
.5M3.3ZS10	5005A
.5M3.3ZS5	5066A
.5M3.6ZS5	134A
.5M3.6ZS10	5006A
.5M3.9ZS10	5007A
.5M3.9ZS5	5007A
.5M4.3ZS10	5008A
.5M4.3ZS5	5068A
.5M4.7ZS10	5009A
.5M4.7ZS5	5069A
.5M5.1AZ1	5010T1
.5M5.1AZ2	5010T1
.5M5.1ZS10	5010A
.5M5.1ZS5	5010A
.5M5.6AZ1	5011T1
.5M5.6AZ2	5011T1
.5M5.6ZS10	5011A
.5M6.0ZS10	5012A
.5M6.2AZ2	5013T1
.5M6.2ZS10	5013A
.5M6.8ZS10	5014A
.5M7.5ZS10	5015A
.5M8.2ZS10	5017A
.5M8.2Z10	5016A
.5M8.7ZS5	5073A
.5M9.1ZS10	5018A
.5M10AZ1	5019T1
.5M10AZ2	5019T1
.5M10Z1	5019T1
.5M10Z2	5019T1
.5M10ZS1	5019T1
.5M10ZS2	5019T1
.5M10ZS10	5019A
.5M11ZS10	5020A
.5M12AZ1	5021T1
.5M12AZ2	5021T1
.5M12ZS10	5021A
.5M13ZS5	143A
.5M13ZS10	5022A
.5M14ZS10	5023A
.5M15ZS10	5024A
.5M16ZS5	5075A
.5M16ZS10	5025A
.5M17ZS10	5026A
.5M18ZS5	5077A
.5M18ZS10	5027A
.5M19ZS10	5028A
.5M20ZS5	5029A
.5M20ZS10	5029A
.5M22ZS10	5030A
.5M24ZS10	5031A
.5M25ZS5	5082A
.5M25ZS10	5032A
.5M27ZS5	5002A
.5M27ZS10	5033A
.5M28ZS5	5083A
.5M28ZS10	5034A
.5M30ZS5	5084A
.5M30ZS10	5035A
.5M33ZS10	5036A
.5M36ZS10	5037A
.5M39ZS10	5038A
.5M43ZS5	5039A
.5M43ZS10	5039A
.5M47ZS10	5040A
.5M51ZS10	5041A
.5M56ZS10	5042A
.5M60ZS10	5043A
.5M62ZS10	5044A
.5M68ZS10	5045A
.5M75ZS10	5046A
.5M82ZS10	5047A
.5M87ZS10	5048A
.5M91ZS10	5049A
.5M100ZS10	5050A
.5M110ZS10	5051A
.5M120ZS10	5052A
.5M130ZS10	5053A
.5M140ZS10	5054A
.5M150ZS10	5055A
.5M160ZS10	5056A
.5M170ZS10	5057A
.5M180ZS10	5058A
.5M190ZS10	5059A
.5M200ZS10	5060A
.7E05	116
.7E1	116
.7E2	116
.7E3	116
.7E4	116
.7E5	116
.7E6	116
.7E7	125
.7E8	125
.7E10	125
.7E12	506
.7J05	116
.7J1	116
.7J2	116
.7J3	116
.7J5	116
.7J6	116
.7J7	125
.7J8	125
.7J10	125
.7J12	506
.7J2100	5096A
.7J2120	5097A
.7JM13A	143A
.7JM13B	143A
.7JM13C	143A
.7JM13D	143A
.7JZ6.8	5071A
.7JZ7.5	138A
.7JZ8.2	5072A
.7JZ9.1	139A
.7JZ10	140A
.7JZ11	5074A
.7JZ12	142A
.7JZ13	143A
.7JZ14	144A
.7JZ15	145A
.7JZ16	5075A
.7JZ17	5076A
.7JZ18	5077A
.7JZ19	5078A
.7JZ20	5079A
.7JZ22	5080A
.7JZ24	5081A
.7JZ25	5082A
.7JZ27	146A
.7JZ30	5084A
.7JZ33	147A
.7JZ36	5085A
.7JZ39	5086A
.7JZ43	5087A
.7JZ45	5088A
.7JZ47	5088A
.7JZ50	5089A
.7JZ51	5089A
.7JZ56	148A
.7JZ62	149A
.7JZ68	5092A
.7JZ75	5093A
.7JZ82	150A
.7JZ91	5095A
.7JZ100	5096A
.7JZ110	5151A
.7JZ120	5097A
.7JZ130	5098A
.7JZ140	5099A
.7JZ150	5100A
.7JZ160	5101A
.7JZ180	5103A
.7JZ200	5104A
.7Z6.8	5071A
.7Z6.8A	5071A
.7Z6.8B	5071A
.7Z6.8C	5071A
.7Z6.8D	5071A
.7Z7.5	138A
.7Z7.5A	138A
.7Z7.5B	138A
.7Z7.5C	138A
.7Z7.5D	138A
.7Z8.2	5072A
.7Z8.2A	5072A
.7Z8.2B	5072A
.7Z9.1C	139A
.7Z9.1D	139A
.7Z10	140A
.7Z10A	140A
.7Z10B	140A
.7Z10C	140A
.7Z10D	140A
.7Z11	5074A
.7Z11A	5074A
.7Z11B	5074A
.7Z11C	5074A
.7Z11D	5074A
.7Z12	142A
.7Z12A	142A
.7Z12B	142A
.7Z12C	142A
.7Z12D	142A
.7Z13	143A
.7Z13A	143A
.7Z13B	143A
.7Z13C	143A
.7Z13D	143A
.7Z14	144A
.7Z14A	145A
.7Z14B	145A
.7Z14C	145A
.7Z14D	144A
.7Z15	145A
.7Z15A	145A
.7Z15D	145A
.7Z16	5075A
.7Z16A	5075A
.7Z16B	5075A
.7Z16C	5075A
.7Z16D	5075A
.7Z17	5076A
.7Z17A	5076A
.7Z17B	5076A
.7Z17C	5076A
.7Z17D	5076A
.7Z18	5077A
.7Z18A	5077A
.7Z18B	5077A
.7Z18C	5077A
.7Z18D	5077A
.7Z19	5078A
.7Z19A	5078A
.7Z19B	5078A
.7Z19C	5078A
.7Z19D	5078A
.7Z20	5079A
.7Z20A	5079A
.7Z20B	5079A
.7Z20C	5079A
.7Z20D	5079A
.7Z22	5080A
.7Z22A	5080A
.7Z22B	5080A
.7Z22C	5080A
.7Z22D	5080A
.7Z24	5081A
.7Z24A	5081A
.7Z24B	5081A
.7Z24C	5081A
.7Z24D	5081A
.7Z25	5082A
.7Z25A	5082A
.7Z25B	5082A
.7Z25C	5082A
.7Z25D	5082A
.7Z26	5085A
.7Z27	146A
.7Z27A	146A
.7Z27B	146A
.7Z27C	146A
.7Z27D	146A
.7Z30	5084A
.7Z30A	5084A
.7Z30B	5084A
.7Z30C	5084A
.7Z30D	5084A
.7Z33	147A
.7Z33A	147A
.7Z33B	147A
.7Z33C	147A
.7Z33D	147A
.7Z36A	5085A
.7Z36B	5085A
.7Z36C	5085A
.7Z36D	5085A
.7Z39	5086A
.7Z39A	5086A
.7Z39B	5086A
.7Z39C	5086A
.7Z39D	5086A
.7Z43	5087A
.7Z43A	5087A
.7Z43B	5087A
.7Z43C	5087A
.7Z43D	5087A
.7Z45A	5088A
.7Z45B	5088A
.7Z45C	5088A
.7Z45D	5088A
.7Z47	5088A
.7Z47A	5088A
.7Z47B	5088A
.7Z47C	5088A
.7Z47D	5088A
.7Z50A	5089A
.7Z50B	5089A
.7Z50C	5089A
.7Z50D	5089A
.7Z51	5089A
.7Z51A	5089A
.7Z51B	5089A
.7Z51C	5089A
.7Z51D	5089A
.7Z52A	5089A
.7Z52B	5089A
.7Z52C	5089A
.7Z52D	5089A
.7Z56	5090A
.7Z56A	148A
.7Z56B	148A
.7Z56C	148A
.7Z56D	148A
.7Z62	149A
.7Z62A	149A
.7Z62B	149A
.7Z62C	149A
.7Z62D	149A
.7Z68	5092A
.7Z68A	5092A
.7Z68B	5092A
.7Z68C	5092A
.7Z68D	5092A
.7Z75	5093A
.7Z75A	5093A
.7Z75B	5093A
.7Z75C	5093A
.7Z75D	5093A
.7Z82	150A
.7Z82A	150A
.7Z82B	150A
.7Z82C	150A
.7Z82D	150A
.7Z91	5095A
.7Z91A	5095A
.7Z91B	5095A
.7Z91C	5095A
.7Z91D	5095A
.7Z100	5096A
.7Z100A	5096A
.7Z100B	5096A
.7Z100C	5096A
.7Z100D	5096A
.7Z110	151A
.7Z110A	151A
.7Z110B	151A
.7Z110C	151A
.7Z110D	151A
.7Z120	5097A
.7Z120A	5097A
.7Z120B	5097A
.7Z120C	5097A
.7Z120D	5097A
.7Z130	5098A
.7Z130A	5098A
.7Z130B	5098A
.7Z130C	5098A
.7Z130D	5098A
.7Z140	5099A
.7Z140A	5099A
.7Z140B	5099A
.7Z140C	5099A
.7Z140D	5099A
.7Z150	5100A
.7Z150A	5100A
.7Z150B	5100A
.7Z150C	5100A
.7Z150D	5100A
.7Z160	5101A
.7Z160A	5101A
.7Z160B	5101A
.7Z160C	5101A
.7Z160D	5101A
.7Z180	5103A
.7Z180A	5103A
.7Z180B	5103A
.7Z180C	5103A
.7Z180D	5103A
.7Z200A	5105A
.7Z200B	5105A
.7Z200C	5105A
.7Z200D	5105A
.7ZM1	5074A
.7ZM6.8	5071A
.7ZM6.8A	5071A
.7ZM6.8B	5071A
.7ZM6.8C	5071A
.7ZM6.8D	5071A
.7ZM7.5	138A
.7ZM7.5A	138A
.7ZM7.5B	138A
.7ZM7.5C	138A
.7ZM7.5D	138A
.7ZM8.2	5072A
.7ZM8.2A	5072A
.7ZM8.2B	5072A
.7ZM8.2C	5072A
.7ZM8.2D	5072A
.7ZM9.1	139A
.7ZM9.1A	139A
.7ZM9.1B	139A
.7ZM9.1C	139A
.7ZM9.1D	139A
.7ZM10	140A
.7ZM10A	140A
.7ZM10B	140A
.7ZM10C	140A
.7ZM10D	140A
.7ZM11	5074A
.7ZM11A	5074A
.7ZM11B	5074A
.7ZM11C	5074A
.7ZM12	142A
.7ZM12A	142A
.7ZM12B	142A
.7ZM12C	142A
.7ZM12D	142A
.7ZM13	143A
.7ZM13A	143A
.7ZM13B	143A
.7ZM13C	143A
.7ZM13D	143A
.7ZM14	144A
.7ZM14A	144A
.7ZM14B	144A
.7ZM14C	144A
.7ZM14D	144A
.7ZM15	145A
.7ZM15A	145A
.7ZM15B	145A
.7ZM15C	145A
.7ZM15D	145A
.7ZM16	5075A
.7ZM16A	5075A
.7ZM16B	5075A
.7ZM16C	5075A
.7ZM16D	5075A
.7ZM17	5076A
.7ZM17A	5076A
.7ZM17B	5076A
.7ZM17C	5076A
.7ZM17D	5076A
.7ZM18	5077A
.7ZM18A	5077A
.7ZM18B	5077A
.7ZM18C	5077A
.7ZM18D	5077A
.7ZM19	5078A
.7ZM19A	5078A
.7ZM19B	5078A
.7ZM19C	5078A
.7ZM19D	5078A
.7ZM20	5079A
.7ZM20A	5079A
.7ZM20B	5079A
.7ZM20C	5079A
.7ZM20D	5079A
.7ZM22	5080A
.7ZM22A	5080A
.7ZM22B	5080A
.7ZM22C	5080A
.7ZM22D	5080A
.7ZM24	5081A
.7ZM24A	5081A
.7ZM24B	5081A
.7ZM24C	5081A
.7ZM24D	5081A
.7ZM25	5082A
.7ZM25A	5082A
.7ZM25B	5082A
.7ZM25C	5082A
.7ZM25D	5082A
.7ZM27	146A
.7ZM27A	146A
.7ZM27B	146A
.7ZM27C	146A
.7ZM27D	146A
.7ZM30	5084A
.7ZM30A	5084A
.7ZM30B	5084A
.7ZM30C	5084A
.7ZM30D	5084A
.7ZM33	147A
.7ZM33A	147A
.7ZM33B	147A
.7ZM33C	147A
.7ZM33D	147A
.7ZM33S	147A
.7ZM36	5085A
.7ZM36A	5085A
.7ZM36B	5085A
.7ZM36C	5085A
.7ZM36D	5085A
.7ZM39	5086A
.7ZM39A	5086A
.7ZM39B	5086A
.7ZM39C	5086A
.7ZM39D	5086A
.7ZM43	5087A
.7ZM43A	5087A
.7ZM43B	5087A
.7ZM43C	5087A
.7ZM43D	5087A
.7ZM47	5088A
.7ZM47A	5088A
.7ZM47B	5088A
.7ZM47C	5088A
.7ZM47D	5088A
.7ZM50A	5089A
.7ZM50B	5089A
.7ZM50C	5089A
.7ZM50D	5089A
.7ZM51	5089A
.7ZM51A	5089A
.7ZM51B	5089A
.7ZM51C	5089A
.7ZM51D	5089A
.7ZM52A	5089A
.7ZM52B	5089A
.7ZM52C	5089A
.7ZM52D	5089A
.7ZM56	5090A
.7ZM56A	5090A
.7ZM56B	5090A
.7ZM56C	5090A
.7ZM56D	5090A
.7ZM62	149A
.7ZM62A	149A
.7ZM62B	149A
.7ZM62C	149A
.7ZM62D	149A
.7ZM68	5092A
.7ZM68A	5092A
.7ZM68B	5092A

PART NUMBER	NTE REPLACEMENT
.7ZM68C	5092A
.7ZM68D	5092A
.7ZM75	5093A
.7ZM75A	5093A
.7ZM75B	5093A
.7ZM75C	5093A
.7ZM75D	5093A
.7ZM82	150A
.7ZM82A	150A
.7ZM82B	150A
.7ZM82C	150A
.7ZM82D	150A
.7ZM91	5095A
.7ZM91A	5095A
.7ZM91B	5095A
.7ZM91C	5095A
.7ZM91D	5095A
.7ZM100	5096A
.7ZM100A	5096A
.7ZM100B	5096A
.7ZM100C	5096A
.7ZM100D	5096A
.7ZM110	151A
.7ZM110A	151A
.7ZM110B	151A
.7ZM110C	151A
.7ZM110D	151A
.7ZM120	5097A
.7ZM120A	5097A
.7ZM120B	5097A
.7ZM120C	5097A
.7ZM120D	5097A
.7ZM130	5098A
.7ZM130A	5098A
.7ZM130B	5098A
.7ZM130C	5098A
.7ZM130D	5098A
.7ZM140	5099A
.7ZM140A	5099A
.7ZM140B	5099A
.7ZM140C	5099A
.7ZM140D	5099A
.7ZM150	5100A
.7ZM150A	5100A
.7ZM150B	5100A
.7ZM150C	5100A
.7ZM150D	5100A
.7ZM160	5101A
.7ZM160A	5101A
.7ZM160B	5101A
.7ZM160C	5101A
.7ZM160D	5101A
.7ZM180	5103A
.7ZM180A	5103A
.7ZM180B	5103A
.7ZM180C	5103A
.7ZM180D	5103A
.7ZM200	5105A
.7ZM200A	5105A
.7ZM200B	5105A
.7ZM200C	5105A
.7ZM200D	5105A
.25N6.8	5014A
.25N7.5	5015A
.25N8.2	5016A
.25N9.1	5018A
.25N10	5019A
.25N11	5020A
.25N12	5021A
.25N13	5022A
.25N14	5023A
.25N15	145A
.25N16	5025A
.25N17	5026A
.25N18	5027A
.25N19	5028A
.25N20	5029A
.25N22	5030A
.25N24	5031A
.25N25	5032A
.25N27	5033A
.25N30	5035A
.25N33	5036A
.25N36	5037A
.25N39	5038A
.25N43	5039A
.25N45	5040A
.25N47	5040A
.25N50	5041A
.25N52	5041A
.25N56	5042A
.25N62	5044A
.25N68	5045A
.25N75	5046A
.25N82	5047A
.25N91	5049A
.25N100	5050A
.25N110	5051A
.25N120	5052A
.25N130	5053A
.25N140	5054A
.25N150	5055A
.25N200	5060A
.25NN15	5024A
.25T5.6	136A
.25T5.6A	136A
.25T5.6B	136A
.25T5.8	5070A
.25T5.8A	5070A
.25T6.2	137A
.25T6.2A	137A
.25T6.2B	137A
.25T6.8	5071A
.25T6.8A	5071A

PART NUMBER	NTE REPLACEMENT
.25T7.1	5071A
.25T7.1A	5071A
.25T7.5	138A
.25T7.5A	138A
.25T7.5B	138A
.25T8.2	5072A
.25T8.2A	5072A
.25T8.2B	5016A
.25T8.7	5073A
.25T8.7A	5073A
.25T8.7B	5017A
.25T8.8	5073A
.25T8.8A	5073A
.25T9.1	139A
.25T9.1A	139A
.25T9.1B	139A
.25T10	140A
.25T10.5	140A
.25T10.5A	140A
.25T10A	140A
.25T10B	140A
.25T11	5074A
.25T11.5	141A
.25T11.5B	141A
.25T11A	5074A
.25T11B	5020A
.25T12	142A
.25T12.8	143A
.25T12.8A	143A
.25T12.8B	143A
.25T12A	142A
.25T12B	142A
.25T13	143A
.25T13A	143A
.25T13B	5022A
.25T14	144A
.25T14A	144A
.25T14B	144A
.25T15	145A
.25T15.8	5075A
.25T15.8A	5075A
.25T15A	145A
.25T15B	145A
.25T16	5075A
.25T16A	5075A
.25T16B	5025A
.25T17	5076A
.25T17A	5076A
.25T18	5077A
.25T18A	5077A
.25T18B	5027A
.25T19	5078A
.25T19A	5078A
.25T20	5079A
.25T20A	5079A
.25T20B	5029A
.25T22	5080A
.25T22A	5080A
.25T22B	5030A
.25T23.5	5081A
.25T23.5BA	5081A
.25T24	5081A
.25T24.	5081A
.25T24A	5081A
.25T24B	5031A
.25T25	5082A
.25T25A	5082A
.25T27	146A
.25T27A	146A
.25T27B	146A
.25T28	5083A
.25T28A	5083A
.25T30	5084A
.25T30A	5084A
.25T30B	5035A
.25T33	147A
.25T33A	147A
.25T33B	147A
.25T36	5085A
.25T36A	5085A
.25T36B	5037A
.25T39	5086A
.25T39A	5086A
.25T39B	5038A
.25T43	5087A
.25T43A	5087A
.25T43B	5039A
.25T47	5088A
.25T47A	5088A
.25T47B	5040A
.25T51	5089A
.25T51A	5089A
.25T55	148A
.25T55B	148A
.25T56	5090A
.25T56A	5090A
.25T56B	5042A
.25T60	5091A
.25T60A	5091A
.25T62	149A
.25T62A	149A
.25T62B	149A
.25T68	5092A
.25T68A	5092A
.25T69B	5045A
.25T75	5093A
.25T75A	5093A
.25T75B	5046A
.25T82	150A
.25T82A	150A
.25T82B	150A
.25T87	5094A
.25T87A	5094A
.25T87B	5048A

PART NUMBER	NTE REPLACEMENT
.25T91	5095A
.25T91A	5095A
.25T91B	5049A
.25T100	5096A
.25T100A	5096A
.25T100B	5050A
.25T110	151A
.25T110A	5151A
.25T110B	151A
.25T120	5097A
.25T120A	5097A
.25T120B	5052A
.25T130	5098A
.25T130A	5098A
.25T130B	5053A
.25T140	5099A
.25T150	5100A
.25T150A	5100A
.25T150B	5055A
.25T151B	5041A
.25T160	5101A
.25T160A	5101A
.25T160B	5056A
.25T175	5102A
.25T180	5103A
.25T180A	5103A
.25T180B	5058A
.25T200	5105A
.25T200A	5105A
.25T200B	5060A
.72M6.8A	5071A
.72M6.8B	5071A
.72M6.8C	5071A
.72M6.8D	5071A
.72M16A	5075A
.72M20B	5079A
.72M20C	5079A
.72M20D	5079A
.72M36C	5085A
.72M36D	5085A
.75N5	145A
.75N5.1	135A
.75N5.6	136A
.75N6.2	137A
.75N7.5	138A
.75N12	142A
.75N15	145A
.75N27	146A
.75N33	147A
.75N62	149A
.75N82	150A
.75N110	151A
.726.8D	5071A
.728.2A	5072A
.728.2B	5072A
.728.2C	5072A
.MZ24C	5081A
.MZ110B	151A
.MZM14A	144A
A00	7400
A04049	116
A04049B	116
A060-100	107
A090	109
A090G	109
A04091A	116
A04092	116
A04092A	116
A04092B	116
A04093	116
A04093-A	506
A04093-X	506
A04093A	506
A04093A2	506
A04093X	506
A04201	113A
A0205	169
A04210-A	166
A04210A	116
A04230	506
A04230-A	506
A04350-022	116
A04901A	116
A0-54-175	128
A0-54-195	123AP
A01	177
A01(TRANSISTOR)	160
A02	109
A02(IC)	7403
A03	7404
A04	116
A04(IC)	7405
A05	116
A05(IC)	7410
A05G	552
A06	116
A06(IC)	7420
A06-1-12	123AP
A07	109
A08	506
A08(IC)	7430
A08-105018	130
A08-1050115	181
A09	7440
A054-103	109
A054-105	109
A054-108	123AP
A054-109	129
A054-114	123AP
A054-115	123AP
A054-119	614
A054-148	107
A054-149	156
A054-150	116

PART NUMBER	NTE REPLACEMENT
A054-151	142A
A054-154	130
A054-155	123AP
A054-156	128
A054-157	108
A054-158	108
A054-159	108
A054-160	128
A054-163	108
A054-164	108
A054-165	703
A054-170	107
A054-173	123AP
A054-175	123AP
A054-186	128
A054-187	109
A054-195	123AP
A054-206	128
A054-221	123AP
A054-222	123AP
A054-223	159
A054-224	175
A054-225	123AP
A054-226	110MP
A054-228	177
A054-229	156
A054-230	116
A054-231	143A
A054-232	5079A
A054-233	123AP
A054-234	123AP
A054-470	108
A059-100	160
A059-101	160
A059-102	160
A059-103	160
A059-104	126
A059-105	126
A059-106	102A
A059-107	102A
A059-108	121
A059-109	123AP
A059-110	128
A059-111	224
A059-114	116
A059-115	104
A059-116	102A
A059-117	138A
A059-118	125
A061-105	107
A061-106	107
A061-107	126
A061-108	107
A061-109	107
A061-110	126
A061-111	126
A061-112	107
A061-114	102A
A061-115	102A
A061-116	131
A061-118	116
A061-119	139A
A065-101	116
A065-102	123AP
A065-103	123AP
A065-104	123AP
A065-105	158
A065-106	102A
A065-108	123AP
A065-109	123AP
A065-110	123AP
A065-111	131
A065-112	158
A065-113	123AP
A066-12	177
A066-109	123AP
A066-110	132
A066-111	229
A066-112	123AP
A066-113	159
A066-113(2SC7321)	123AP
A066-113A	159
A066-113AB	159
A066-114	152
A066-115	289
A066-116	195A
A066-117	237
A066-118	159
A066-118A	159
A066-119	109
A066-119(1S1555)	177
A066-119(GE)	109
A066-119(SI)	177
A066-120	109
A066-121	109
A066-122	143A
A066-124	116
A066-125	904
A066-133	143A
A066-143	199
A068-100	116
A068-101	109
A068-102	116
A068-103	139A
A068-104	125
A068-106	132
A068-107	132
A068-108	123AP
A068-109	159
A068-109A	159
A068-111	108
A068-112	108
A068-113	123AP
A068-114	175

PART NUMBER	NTE REPLACEMENT
A069-101	107
A069-102	107
A069-102/103	123AP
A069-103	107
A069-104	123AP
A069-104/106	123AP
A069-105	102A
A069-106	123AP
A069-107	158
A069-109	109
A069-111	110MP
A069-112	116
A069-114	107
A069-115	109
A069-116	107
A069-118	110MP
A069-119	107
A069-120	123AP
A069-121	126
A069-122	123AP
A0375	116
A0377	116
A0491A	116
A0666-118	290
A0311400	1128
A04166-2	145A
A04212-A	125
A04212-B	116
A04212A	116
A04212B	116
A04226	116
A04231-A	166
A042313	116
A04233	116
A04234-2	139A
A04241-A	506
A04242	116
A04284-A	166
A04294	506
A04294-1	506
A04299-202	503
A04299-251	503
A04331-021	116
A04331-023	116
A04331-043	116
A04332-007	138A
A04344-007	138A
A04344-026	5082A
A04716	166
A04727	120
A04731	116
A04735-A	118
A0847905	89
A1	199
A1-3	126
A1-44	130
A1A	154
A1A1	116
A1A5	116
A1A9	116
A1B	123AP
A1B1	116
A1B5	116
A1B9	116
A1C	162
A1C1	116
A1C5	116
A1C9	116
A1D	163A
A1D1	116
A1D5	116
A1D9	116
A1DI	163A
A1DJ	163A
A1E	108
A1E1	116
A1E5	116
A1E9	116
A1F	123AP
A1F1	116
A1F5	116
A1F9	116
A1G	107
A1G1	116
A1G5	116
A1G9	116
A1G-1	107
A1G-1A	108
A1H	123AP
A1H1	125
A1H5	125
A1H9	125
A1H(MOTOROLA)	163A
A1J	123AP
A1K	108
A1K1	125
A1K5	125
A1K9	125
A1L	123AP
A1M	154
A1M1	125
A1M5	125
A1M9	125
A1M-1	107
A1N	124
A1P	107
A1P-1	107
A1P-1A	107
A1P-5	108
A1P-/4923	108
A1P/4922	107
A1P/4923	107
A1P/4923-1	108
A1R	107

PART NUMBER	NTE REPLACEMENT
A1R-1	107
A1R-1/4925	108
A1R-1A	108
A1R-2	107
A1R-2/4926	108
A1R-2A	108
A1R-5	108
A1R-24926	108
A1R/4924	107
A1R/4925	107
A1R/4925A	108
A1R/4926	107
A1R/4926A	108
A1S	154
A1T	123AP
A1T-1	123AP
A1U	161
A1U(3RDIF)	233
A1U(LAST IF)	233
A1V	123AP
A1VE	123AP
A1W	123AP
A1Y	196
A1Z	233
A2A	154
A2A1	116
A2A4	116
A2A5	116
A2A9	116
A2B	123AP
A2B1	116
A2B4	116
A2B5	116
A2B9	116
A2BRN	123AP
A2C	108
A2C1	116
A2C4	116
A2C5	116
A2C9	116
A2D	108
A2D1	116
A2D4	116
A2D5	116
A2D9	116
A2E	130
A2E1	116
A2E4	116
A2E5	116
A2E9	116
A2E-2	130
A2EBLK	130
A2EBRN	130
A2EBRN-1	130
A2F	108
A2F1	116
A2F4	116
A2F5	116
A2F9	116
A2FGRN	123AP
A2G	108
A2G1	116
A2G4	116
A2G5	116
A2G9	116
A2H	108
A2H1	125
A2H4	125
A2H5	125
A2H9	125
A2J	123AP
A2K	154
A2K1	125
A2K4	125
A2K5	125
A2K9	125
A2L	108
A2M	107
A2M1	125
A2M4	125
A2M5	125
A2M9	129
A2M-1	107
A2MA	156
A2N	107
A2N2156	213
A2N-1	107
A2N-2	107
A2N-2A	108
A2P	107
A2P-5	108
A2S	130
A2S-3	130
A2SA550P	129
A2SA564F	129
A2SA564FR	159
A2SA666PQR	102A
A2SB240A	104
A2SB242A	104
A2SB248A	104
A2SC538PQR	123AP
A2SC538R	199
A2SD226OP	175
A2SD226PQ	175
A2SD226OP	152
A2T	108
A2T682	103A
A2T919	108
A2U	124
A2V	108
A2W	108
A2Y	107
A2Z	154
A3A	108

PART NUMBER	NTE REPLACEMENT
A3A1	116
A3A3	116
A3A5	116
A3A9	116
A3B1	116
A3B3	116
A3B5	116
A3B9	116
A3C	108
A3C1	116
A3C3	116
A3C5	116
A3C9	116
A3D	108
A3D1	116
A3D3	116
A3D5	116
A3D9	116
A3E	123AP
A3E1	116
A3E3	116
A3E5	116
A3E9	116
A3F	123AP
A3F1	116
A3F3	116
A3F5	116
A3F9	116
A3G	123AP
A3G1	116
A3G3	116
A3G5	116
A3G9	116
A3H	108
A3H1	125
A3H3	125
A3H5	125
A3H9	125
A3H-1	163A
A3J	199
A3K	199
A3K1	125
A3K3	125
A3K5	125
A3K9	125
A3L	157
A3L4-6001	130
A3L4-6001-01	130
A3M	154
A3M1	125
A3M3	125
A3M5	125
A3M9	125
A3MA	154
A3N	123AP
A3N71	108
A3N72	108
A3N73	108
A3P	108
A3R	108
A3S	123AP
A3SB	108
A3T	123AP
A3T201	101
A3T202	101
A3T203	101
A3T918	161
A3T929	123AP
A3T930	123AP
A3T2221	123AP
A3T2221A	123AP
A3T2222	123AP
A3T2222A	123AP
A3T2484	192
A3T2894	159
A3T2906	159
A3T2906A	159
A3T2907	159
A3T2907A	193
A3T3011	123AP
A3TE120	130
A3TE230	130
A3TE240	130
A3TX003	130
A3TX004	130
A3U	130
A3U-4	130
A3W	123AP
A3Y	124
A3Z	123AP
A4.7S	6115
A4A	123AP
A4A1	116
A4A5	116
A4A9	116
A4A-1-70	121
A4A-1-705	121
A4A-1A9G	121
A4B	199
A4B1	116
A4B5	116
A4B9	116
A4C1	116
A4C5	116
A4C9	116
A4D1	116
A4D5	116
A4D9	116
A4E	107
A4E1	116
A4E5	116
A4E9	116
A4E-5	108
A4F	199

PART NUMBER	NTE REPLACEMENT
A4F1	116
A4F5	116
A4F9	116
A4G	108
A4G1	116
A4G5	116
A4G9	116
A4H	154
A4H1	125
A4H5	125
A4H9	125
A4I7014	181
A4J	130
A4JBLK	130
A4JBRN	130
A4JD3B1	101
A4JRED-1	130
A4JX2A822	103A
A4K	184
A4K1	125
A4K5	125
A4K9	125
A4L	103A
A4M	123AP
A4M1	125
A4M5	125
A4M9	125
A4N	123AP
A4P	123AP
A4R	123AP
A4S	130
A4S-1	130
A4T	108
A4U	123AP
A4V	123AP
A4Y-1	107
A4Y-1A	108
A4Y-2	123AP
A4Z	130
A5-SAM(3)	595
A5A	196
A5A1	116
A5A2	116
A5A5	116
A5A9	116
A5A-1	184
A5A-1B	152
A5A-2	184
A5A-3	184
A5A-4	184
A5A-5	184
A5A-IB	152
A5B	128
A5B1	116
A5B2	116
A5B5	116
A5B9	116
A5C	123AP
A5C1	116
A5C2	116
A5C5	116
A5C9	116
A5D1	116
A5D2	116
A5D5	116
A5D9	116
A5E	188
A5E1	116
A5E2	116
A5E5	116
A5E9	116
A5F	190
A5F1	116
A5F2	116
A5F5	116
A5F9	116
A5FF	190
A5G	184
A5G1	116
A5G2	116
A5G5	116
A5G9	116
A5H	123AP
A5H1	125
A5H2	125
A5H5	125
A5H9	125
A5J	108
A5K	123AP
A5K1	125
A5K2	125
A5K5	125
A5K9	125
A5L	123AP
A5M	123AP
A5M1	125
A5M2	125
A5M5	125
A5M9	125
A5N	123AP
A5P	123AP
A5R	123AP
A5S	123AP
A5T	191
A5T3707	128
A5T404	159
A5T404A	159
A5T2192	293
A5T2222	123AP
A5T2604	159
A5T2605	159
A5T2907	159
A5T3391	293
A5T3391A	293
A5T3392	123AP
A5T3496	159
A5T3504	294
A5T3505	193
A5T3565	123AP
A5T3571	278
A5T3572	278
A5T3638	159
A5T3638A	159
A5T3644	159
A5T3645	159
A5T3707	199
A5T3708	199
A5T3709	199
A5T3710	199
A5T3711	199
A5T3751	128
A5T3821	132
A5T3903	123AP
A5T3904	123AP
A5T3905	159
A5T3906	159
A5T4026	193
A5T4027	159
A5T4028	193
A5T4029	159
A5T4058	234
A5T4059	234
A5T4060	234
A5T4061	234
A5T4062	234
A5T4123	123AP
A5T4124	123AP
A5T4125	159
A5T4126	159
A5T4248	159
A5T4249	159
A5T4250	294
A5T4260	159
A5T4402	159
A5T4403	159
A5T4409	123AP
A5T4410	287
A5T4621	159
A5T5058	287
A5T5059	287
A5T5086	159
A5T5087	294
A5T5172	123AP
A5T5209	123AP
A5T5210	293
A5T5219	123AP
A5T5220	123AP
A5T5221	159
A5T5223	123AP
A5T5225	123AP
A5T5226	159
A5T5227	159
A5T5400	288
A5T5401	288
A5T5550	287
A5T5551	287
A5T6222	293
A5T-1	191
A5TA	191
A5U	123AP
A5V	181
A5W	123AP
A5Y	184
A6A	163A
A6A1	156
A6A5	156
A6A9	156
A6AK	156
A6B	108
A6B1	156
A6B5	156
A6B9	156
A6B-3-70	121MP
A6B-3-705	121MP
A6B-3A9G	121MP
A6C	184
A6C1	156
A6C5	156
A6C9	156
A6C(GRN)	184
A6C-1	184
A6C-1(RED)	184
A6C-1-RED	184
A6C-2	184
A6C-2(BLK)	184
A6C-2-BLACK	184
A6C-3	184
A6C-3(WHT)	184
A6C-3-WHITE	184
A6C-4	184
A6C-GREEN	184
A6D	188
A6D1	156
A6D5	156
A6D9	156
A6D-1	188
A6D-2	188
A6D-3	188
A6E	108
A6E1	156
A6E5	156
A6E9	156
A6F	108
A6F1	156
A6F5	156
A6FK	156
A6G	188
A6G1	156
A6G5	156
A6G9	156
A6H	123AP
A6H1	156
A6H5	156
A6H9	156
A6HD	123AP
A6J	123AP
A6K	123AP
A6K1	156
A6K5	156
A6K9	156
A6L	130
A6LBLK	130
A6LBLK-1	130
A6LBRN	130
A6LBRN-1	130
A6LRED	130
A6LRED-1	130
A6M	163A
A6M1	156
A6M5	156
A6M9	156
A6N	130
A6N1	506
A6N5	506
A6N9	506
A6N-6	130
A6P	108
A6R	123AP
A6S	123AP
A6T	108
A6T5222	278
A6U	108
A6V	107
A6V-5	108
A6W	184
A6Y	190
A6Z	163A
A6ZH	163A
A7-12	130
A7-13	130
A7A	123AP
A7A1	156
A7A5	156
A7A9	156
A7A30	108
A7A31	108
A7A32	108
A7B	124
A7B5	156
A7B9	156
A7B(MOTOROLA)	124
A7C	116
A7C1	156
A7C5	156
A7C7	156
A7C9	156
A7C(MOTOROLA)	184
A7D	116
A7D1	156
A7D5	156
A7D9	156
A7E	116
A7E1	156
A7E5	156
A7E9	156
A7E(TRANS)	123AP
A7F	190
A7F1	156
A7F5	156
A7F9	156
A7G	116
A7G1	156
A7G5	156
A7G9	156
A7H1	156
A7H5	156
A7H9	156
A7K1	156
A7K5	156
A7K9	156
A7M	130
A7M1	156
A7M5	156
A7M9	156
A7M-5(TRANS)	130
A7N	108
A7N1	506
A7N5	506
A7N9	506
A7P	108
A7R	123AP
A7S	123AP
A7T	123AP
A7T3391	293
A7T3391A	293
A7T3392	123AP
A7T5172	123AP
A7T6027	6402
A7T6028	6402
A7U	108
A7V	108
A7W	108
A7Y	123AP
A7Z	184
A8-1	160
A8-1-70	160
A8-1-70-12	160
A8-1-70-12-7	160
A8-1-70-1	160
A8-1-A-4-7B	160
A8-1A	160
A8-1A0	160
A8-1A0R	160
A8-1A1	160
A8-1A2	160
A8-1A3	160
A8-1A3P	160
A8-1A4	160
A8-1A4-7	160
A8-1A4-7B	160
A8-1A5	160
A8-1A5L	160
A8-1A6	160
A8-1A6-4	160
A8-1A7	160
A8-1A7-1	160
A8-1A8	160
A8-1A9	160
A8-1A9G	160
A8-1A19	160
A8-1A21	160
A8-1A82	160
A8-10	160
A8-11	160
A8-12	160
A8-13	160
A8-14	160
A8-15	160
A8-16	160
A8-17	160
A8-18	160
A8-19	160
A8A	194
A8B	123AP
A8C	185
A8D	128
A8E	196
A8F	241
A8G	123AP
A8J	188
A8K	196
A8L	123AP
A8M	162
A8N	194
A8P	130
A8P404-ORN	121
A8P404F	121
A8P-2-70	102A
A8P-2-705	102A
A8P-2A9G	102A
A8P-404-ORN	121
A8R	199
A8S	108
A8T	163A
A8T404	159
A8T404A	159
A8T3391	293
A8T3391A	293
A8T3392	123AP
A8T3702	159
A8T3703	159
A8T3704	293
A8T3705	293
A8T3706	293
A8T3707	123AP
A8T3708	123AP
A8T3709	123AP
A8T3710	123AP
A8T3711	123AP
A8T4026	193
A8T4027	159
A8T4028	193
A8T4029	159
A8T4058	159
A8T4059	159
A8T4060	159
A8T4061	159
A8T4062	159
A8T5172	123AP
A8U	130
A8V	154
A8VA	154
A8W	130
A8Y	241
A8Z	194
A9-175	199
A9A	108
A9B	123AP
A9C	172A
A9D	108
A9E	123AP
A9F	123AP
A9G	123AP
A9H	123AP
A9J	123AP
A9K	162
A9L-4-70	102A
A9L-4-705	102A
A9L-4A9G	102A
A9M	191
A9N	181
A9P	162
A9R	163A
A9S	123AP
A9T	123AP
A9U	123AP
A9V	152
A9W	123AP
A9Y	123AP
A10	74H40
A10A	156
A10B	156
A10C	116
A10D	116
A10E	116
A10G05-010-A	123AP
A10G05-011-A	123AP
A10G05-015-D	123AP
A10M	116
A10N	116
A10P	125
A11	116
A12	102A
A12(IC)	7451
A12-1	225
A12-1-70	123AP
A12-1-705	123AP
A12-1A9G	123AP
A12-2	225
A12A	102A
A12B	102A
A12C	102A
A12D	102A
A12H	102A
A12V	102A
A13(IC)	7454
A13(RECT)	116
A13(TRANS)	160
A13-0032	130
A13-14604-1A	121MP
A13-14604-1B	121MP
A13-14604-1C	121MP
A13-14604-1D	121MP
A13-14604-1E	121MP
A13-14777-1	121MP
A13-14777-1A	121MP
A13-14777-1B	121MP
A13-14777-1C	121MP
A13-14777-1D	121MP
A13-14778-1A	121MP
A13-14778-1B	121MP
A13-14778-1C	121MP
A13-14778-1D	121MP
A13-15809-1	225
A13-17918-1	130
A13-22741-2	121MP
A13-23594-1	130
A13-28432-1	225
A13-33188-2	130
A13-55062-1	225
A13-86416-1	103A
A13-86420-1	101
A13-87433-1	101
A13-SAM(3)	593
A13A2	116
A13AA2	116
A13B2	116
A13C2	116
A13D2	116
A13E2	116
A13F2	116
A13M2	125
A13N1	123AP
A14(IC)	7472
A14(TRANS)	160
A14-586-01	121
A14-601-10	130
A14-601-12	130
A14-601-13	130
A14-602-19	225
A14-602-36	225
A14-602-37	225
A14-602-63	108
A14-603-05	108
A14-603-06	108
A14-1001	126
A14-1002	126
A14-1003	126
A14-1004	102A
A14-1005	102A
A14-1006	102A
A14-1007	102A
A14-1008	102A
A14-1009	102A
A14-1010	102A
A14A	125
A14A8-1	160
A14A8-19	160
A14A8-19G	160
A14A10G	121
A14A-70	121
A14A-705	121
A14B	116
A14C	116
A14D	116
A14E	116
A14E2	116
A14F	125
A14M	116
A14N	156
A14P	125
A14PD1	506
A14PD2	506
A14PD3	506
A14U	125
A15(IC)	7474
A15(TRANS)	102A
A15-1001	126
A15-1002	126
A15-1003	126
A15-1004	102A
A15-1005	102A
A15-1007	109
A15-1008	116
A15A	5801
A15B	5802
A15BK	102A
A15BL	102A
A15BLU	102A
A15C	5803
A15D	5804
A15E	5805
A15F	5800
A15H	102A
A15K	102A
A15M	5806
A15N	5808
A15R	102A
A15U(RECT)	5800
A15U(TRANS)	102A
A15V	102A
A15VR	102A
A15Y	102A
A16	102A
A16A1	103A
A16A2	103A
A17	102A
A17(IC)	7490
A17H	102A
A18	130
A18(IC)	7493A
A18-4	130
A18H	102A
A19	126
A19(IC)	7495
A19-020-072	108
A20	126
A20K	159
A20KA	159
A21	126
A22B	156
A22B1	156
A22D	156
A22D1	156
A22M	156
A23	116
A23B	5944
A23B1	5944
A24	108
A24MW594	108
A24MW595	108
A24MW596	108
A24MW597	108
A24T-016-01L	108
A24T-016-016	108
A25-1001	126
A25-1002	126
A25-1003	126
A25-1004	102A
A25-1005	102A
A25-1006	102A
A25-1007	109
A25-1008	116
A25A509-016-101	123AP
A25A305020101	128
A26	100
A26(W)	177
A27	124
A27(RCA)	175
A28	126
A29	126
A29V082B03	129
A30	109
A30(DIODE)	109
A30(TRANS)	126
A31	100
A31-0206	108
A32	102A
A32-2805-50-1	128
A32-2809	108
A33	102A
A34-6001-1	121
A34-6002-17	121
A35	154
A35(JAPAN)	154
A36	100
A37	126
A38	126
A39	126
A40	100
A40-6704	113A
A40-6722	113A
A40A	5982
A40B	5986
A40C	5988
A40D	5990
A40E	5992
A40F	5980
A40M	5994
A41	160
A41A	5983
A41B	5987
A41C	5989
A41D	5991
A41E	5993
A41F	5981
A41M	5995
A42	160
A42X00022-01	5834
A42X00340-01	109
A42X00041-01	5019A
A42X00460-01	135A
A42X00480-01	5074A
A42X00390-01	177
A42X00290-01	156
A42X00269-01	116
A42X00286-01	102
A42X00373-01(TRAN)	102
A42X00373-01(ZENER)	5070A
A42X00374-01	116
A42X00434-01	123AP
A42X00454-01	5192A
A42X210	103A
A43	126
A44	100
A45	126
A45-1	126
A45-2	126
A45-3	126
A46-867-3	154
A46-8614-3	101
A46-86101-3	107
A46-86109-3	107
A46-86110-3	107
A46-86133-3	107
A46-86301-3	107
A46-86302-3	107
A46-86303-3	107
A48-10075A01	121MP
A48-10075A02	121MP
A48-10075A03	121MP
A48-10075A04	121MP
A48-10075A05	121MP
A48-10075A06	121MP
A48-10075A07	121MP
A48-10075A08	121MP
A48-10103A01	121MP
A48-10103A02	121MP
A48-10103A03	121MP
A48-10103A04	121MP
A48-10103A05	121MP
A48-10103A06	121MP
A48-10103A07	121MP
A48-10103A08	121MP
A48-10103A09	121MP
A48-10103A10	121MP
A48-10103A11	121MP
A48-40247G01	108
A48-43351A02	108
A48-63076A81	121
A48-63076A82	108
A48-63078A52	109
A48-64978A10	121MP
A48-64978A11	121MP
A48-64978A24	121MP
A48-97046A05	108
A48-97046A06	108
A48-97046A07	108
A48-97127A06	108
A48-97127A12	108
A48-97127A18	108
A48-124216	101
A48-124217	101
A48-124218	101
A48-124220	101
A48-124221	101
A48-125233	101
A48-125234	101
A48-125235	101
A48-125236	101
A48-128239	101
A48-134520	101
A48-134648	225
A48-134700	101
A48-134727	121
A48-134731	121
A48-134789	108
A48-134819	154
A48-134837	108
A48-134843	154
A48-134845	108
A48-134853	154
A48-134898	154
A48-134902	108
A48-134904	108
A48-134907	121
A48-134919	154
A48-134922	108
A48-134923	108
A48-134924	108
A48-134925	108
A48-134926	108
A48-134927	154
A48-134931	101
A48-134945	108
A48-134961	108
A48-134962	108
A48-134963	108
A48-134964	108
A48-134965	108
A48-134966	108
A48-134981	108
A48-137002	154
A48-137035	154
A48-137071	108
A48-137075	108
A48-137076	108
A48-137077	108
A48-137102	121
A48-137197	108
A48-137213	1211
A48-137214	121
A48-137215	121
A48-137216	121
A48-137217	121
A48-137218	121
A48-137219	121
A48-137220	121
A48-869254	103A
A48-869283	103A
A48-869476	103A
A48-869476A	103A
A49	126
A50	116
A50(TRANSISTOR)	102A
A51	160
A52	126

PART NUMBER	NTE REPLACEMENT
A53	126
A54-3	152
A54-96-001	123AP
A54-96-002	123AP
A54-96-003	159
A55	100
A56	160
A57	126
A57A144-12	108
A57A145-12	108
A57B124-10	121
A57C5	103A
A57C12-1	154
A57C12-2	154
A57D1-122	154
A57L5-1	121
A57M2-16	154
A57M2-17	154
A57M3-7	121
A57M3-8	121
A58	126
A59	126
A60	126
A61	160
A62-18427	121
A62-19581	108
A63-18426	154
A63-18427	121
A64	102A
A65	102A
A65-09-220	290
A65-1-1A9G	160
A65-1-70	160
A65-1-705	160
A65-1A9G	160
A65-2-70	103A
A65-2-705	103A
A65-2A9G	103A
A65-4-70	101
A65-4-705	101
A65-4A9G	101
A65-P11305-0001A	519
A65-P11311-0001	177
A65-P11324-0001	519
A65A19G	160
A65A-70	160
A65A-705	160
A65B19G	126
A65B-70	126
A65B-705	126
A65C19G	121
A65C-19G	121
A65C-70	121
A65C-705	121
A66	102A
A66-1-70	102A
A66-1-705	102A
A66-1A9G	102A
A66-2-70	102A
A66-2-705	102A
A66-2A9G	102A
A66-3-3A9G	102A
A66-3-70	102A
A66-3-705	102A
A66-3A9G	102A
A66-P11138-0001	128
A66X0043-001	177
A67	126
A67-07-244	199
A67-08-760	316
A67-15-280	195A
A67-33-340	199
A67-33-540	289
A67-37-940	229
A67-70-960	297
A67-76-200	236
A68-23-560	152
A69	126
A69IM4	177
A70	160
A70A	6154
A70B	6154
A70C	6154
A70D	6154
A70E	6156
A70F	160
A70L	160
A70M	6156
A70MA	160
A70N	6158
A70P	6158
A70S	6158
A70T	6158
A71	6158
A71A(RECT)	6154
A71A(TRANS)	126
A71AB	126
A71AC	126
A71B(RECT)	6154
A71B(TRANS	126
A71BS	126
A71C	6154
A71D(RECT)	6154
A71D(TRANS)	126
A71E	6156
A71M	6156
A71N	6158
A71P	6158
A71S	6159
A71T	6159
A71Y	126
A72	126
A72-49-600	519
A72-83-300	6408
A72-86-700	5072A
A72BLU	126
A72BRN	126
A72ORN	126
A72WHT	126
A73	160
A73-16-179	177
A74	160
A74-3-3A9G	100
A74-3-70	100
A74-3-705	100
A74-3A9G	100
A75	126
A75-68-500	116
A75B	126
A76	126
A76-11770	121
A77	126
A77A	126
A77A19G	105
A77A-70	105
A77A-705	105
A77B	126
A77B19G	121MP
A77B-70	121MP
A77B-705	121MP
A77C	126
A77C19G	121
A77C-70	121
A77C-705	121
A77D	126
A78	126
A78B	126
A78C	126
A78D	126
A79	160
A80	126
A81	160
A82	126
A83	126
A83P2B	129
A84	160
A84A19G	121
A84A-70	121
A84A-705	121
A85	126
A86	160
A86-9-1	113A
A86-10-2	101
A86-44-2	101
A86-213-2	154
A86-214-2	154
A86-215-2	154
A86-316-2	154
A86-565-2	194
A86X0030-100	121MP
A87	126
A88	123AP
A88(JAPAN)	123AP
A88-70	160
A88-705	160
A88B19G	160
A88B-70	160
A88B-705	160
A88C19G	100
A88C-70	100
A88C-705	100
A89	160
A90(TRANS)	126
A90A	6354
A90B	6354
A90C	6354
A90D	6354
A90E	6356
A90M	6356
A90N	6358
A90P	6358
A90S	6358
A90T	6358
A90T2	108
A91A	6355
A91B	6355
A91C	6355
A91D	6355
A91E	6357
A91M	6357
A91N	6359
A91P	6359
A91S	6359
A91T	6359
A92	126
A92-1-70	105
A92-1-705	105
A92-1A9G	105
A93	126
A94	126
A95-5280	113A
A95-5281	116
A95-5289	116
A95-5296	118
A95-5297	113A
A95-5314	500A
A97A83	121
A99S07	101
A99SK5	101
A99SK7	101
A100	116
A100(RECT)	116
A100(TRANS)	126
A100A	126
A100B	126
A100C	126
A101	126
A101-A	116
A101A(RECT)	116
A101A(TRANS)	126
A101AA	126
A101AY	126
A101B	126
A101BA	126
A101BB	126
A101BC	126
A101BX	126
A101C	126
A101CA	126
A101CV	126
A101CX	126
A101E	126
A101QA	126
A101V	126
A101X	126
A101Y	126
A101Z	126
A102	126
A102A	126
A102AA	126
A102AB	126
A102B	126
A102BA	126
A102BN	126
A102CA	126
A102TV	126
A103	126
A103A	126
A103B	126
A103C	126
A103CA	126
A103CAK	126
A103CG	126
A103DA	126
A104	126
A104-8	225
A104A	126
A104B	126
A104D	126
A104P	126
A104Y	126
A105	160
A106	123AP
A107	128
A107(JAPAN)	160
A108	123AP
A108(JAPAN)	160
A108A	123AP
A108B	123AP
A109	126
A109R	160
A110	199
A111	123AP
A111(JAPAN)	126
A111T2	154
A112	126
A112-000172	159
A112-000185	159
A112-000187	159
A113	126
A114(TRANS)	102A
A114C	125
A114ES	2356
A114F	507
A115	126A
A115(JAPAN)	102A
A115B	126A
A115B(RECT)	580
A115C(RECT)	580
A115D(RECT)	580
A115E(RECT)	580
A115M(RECT)	580
A116	123AP
A116(JAPAN)	102A
A117	160
A118	160
A120P1	159
A121	126
A121-1	159
A121-1RED	159
A121-15	101
A121-16	101
A121-17	101
A121-21	101
A121-50	101
A121-361	154
A121-444	159
A121-446	159
A121-480	108
A121-495	159
A121-496	159
A121-497	159
A121-497WHT	159
A121-585	107
A121-585B	107
A121-602	159
A121-603	159
A121-679	159
A121-687	107
A121-699	159
A121-746	159
A121-762	101
A121-774	159
A121-1410	101
A122	160
A122(JAPAN)	126
A122-1962	103A
A122GRN	159
A122YEL	159
A123	126
A123-7	116
A124	126
A125	126
A126	160
A127	160
A127-7	101
A128	123AP
A128(JAPAN)	158
A128A	123AP
A129(TRANS)	158
A129-30	101
A129-34	159
A130	154
A130(JAPAN)	160
A130-149	159
A130-40315	159
A130-40429	159
A130-ORN	154
A130-V10	154
A130ORN	108
A130V100	108
A131	126
A132	116
A132(JAPAN)	126
A132(TRANS)	154
A132-1	116
A133	194
A133(JAPAN)	126
A134	126
A135	160
A136	126
A137	123AP
A137(JAPAN)	126
A137(NPN)	123AP
A137(PNP)	159
A138	199
A138(JAPAN)	102A
A139	199
A139(JAPAN)	126
A139(RECT)	6010
A139E	6010
A139ER	6011
A139R(RECT)	6011
A141	123AP
A141(JAPAN)	126
A141B	126
A141C	126
A142	123AP
A142(JAPAN)	126
A142A	126
A142B	126
A142C	126
A143	123AP
A143(JAPAN)	126
A144	126
A144A-1	121
A144A-19	121
A144C	126
A145	126
A145A	126
A145C	126
A146	100
A146B-3	121MP
A146B-39	121MP
A147	100
A148	100
A148P2	102A
A148P2-29	102A
A148P-2	102A
A148P-29	102A
A149	100
A149L-4	102A
A149L-49	102A
A150	126
A151	123AP
A151(JAPAN)	160
A152	123AP
A152(JAPAN)	160
A153	123AP
A153(JAPAN)	126
A154	229
A154(NPN)	108
A154(PNP)	126
A155	229
A155(NPN)	108
A155(PNP)	126
A156	123AP
A156(JAPAN)	126
A157	123AP
A157(JAPAN)	126
A157A	123AP
A157B	123AP
A157C	123AP
A158	123AP
A158A	123AP
A158B	123AP
A158C	123AP
A159	123AP
A159A	123AP
A159B	123AP
A159C	123AP
A160	159
A160(JAPAN)	100
A160A	102
A161	159
A162	159
A163	160
A164	229
A164(NPN)	108
A164(PNP)	126
A165	229
A165(NPN)	108
A165(PNP)	126
A166	126
A167	100
A168	123AP
A168(JAPAN)	100
A168A	100
A168P1	121MP
A169	100
A170	129
A170(JAPAN)	100
A171	159
A171(JAPAN)	100
A172	100
A172A	100
A173	102A
A173B	102A
A174	102
A175	126
A176	126
A176-025-9-002	108
A177	159
A177(A)	159
A177A	159
A177AB	159
A178A	159
A178AB	159
A178B	159
A178BA	159
A179A	159
A179AC	159
A179B	159
A179BB	159
A180	160
A181	102A
A182	100
A183	102A
A187TV	102A
A188	126
A189	126
A192	132
A194	133
A195	133
A196	133
A197	102
A198	100
A200	116
A200-052	159
A201	186
A201-0	126
A201A	126
A201B	126
A201E	126
A201TV0	126
A201TV0	126
A202	126
A202(JAPAN)	126
A202A	126
A202B	126
A202C	126
A202D	126
A203	126
A203(NPN)	186
A203(PNP)	102A
A203A	126
A203AA	102A
A203AA(PNP)	126
A203B	102A
A203B(PNP)	126
A203P	102A
A203P(PNP)	126
A204	100
A205	100
A206	100
A207	100
A208	186
A208(JAPAN)	100
A208(NPN)	186
A209	100
A210	186
A210(JAPAN)	100
A211	5020A
A211(JAPAN)	100
A212	100
A213	126
A214	126
A215	160
A216	126
A217	100
A218	160
A219	160
A220(TRANS)	160
A221	160
A222	160
A223	160
A224	160
A225	160
A226	160
A227	160
A228	160
A229	160
A230	160
A231	158
A232	158
A233	160
A233A	160
A233B	160
A233C	160
A234	160
A234A	160
A234B	126
A234C	126
A235	160
A235A	126
A235B	160
A235C	126
A236	126
A237	126
A238	126
A239	160
A240	160
A240A	160
A240B	160
A240B2	160
A240BL	160
A241	160
A242	160
A243	160
A244	161
A244(AMC)	161
A244(JAPAN)	160
A245	108
A245(AMC)	108
A245(JAPAN)	160
A246	123AP
A246(AMC)	123AP
A246(JAPAN)	126
A246V	126
A247	154
A247(AMC)	154
A247(JAPAN)	126
A248	161
A248(AMC)	123AP
A248(JAPAN)	100
A249	123AP
A249(AMC)	128
A250	126
A251	126
A252	126
A253	186
A253(JAPAN)	126
A254	126
A255	126
A256	126
A257	126
A258	126
A259	126
A260	126
A261	126
A262	126
A263	126
A264	126
A265	126
A266	126
A267	126
A268	126
A269	126
A270	195A
A270(JAPAN)	126
A271	186
A271(JAPAN)	126
A272	152
A272(JAPAN)	126
A273	152
A273(JAPAN)	126
A274(NPN)	195A
A274(PNP)	126
A275	186
A275(JAPAN)	126
A276	152
A276(JAPAN)	160
A277	152
A277(JAPAN)	100
A278	171
A278(JAPAN)	100
A279	171
A279(JAPAN)	100
A280	126
A281	126
A282	100
A283	100
A284	100
A285	160
A286	160
A287	160
A288	126
A288A	126
A289	126
A290	126
A291	126
A292	126
A293	126
A294	126
A295	126
A296	160
A297	160
A297L012C01	159
A297V073C01	129
A297V073C02	129
A297V073C03	159
A297V073C04	159
A297V082B03	129
A298	160
A300	116
A301	123AP
A301(JAPAN)	126
A302	102A
A303	102A
A304	102A
A305	100
A306	123AP
A306(JAPAN)	160
A307	123AP
A307(JAPAN)	160
A308	126
A309	126
A310	154
A310(JAPAN)	126
A311	128
A311(JAPAN)	100
A312	100
A313	126
A314	126
A315	126
A316	126
A321	108
A321(JAPAN)	160
A322	160
A322(JAPAN)	160
A323	123AP
A323(JAPAN)	160
A324	123AP
A324(JAPAN)	160
A325	126
A326	126
A327	160
A329	126
A329A	126
A329B	126
A330	100
A331	126
A332	100
A335	126
A337	126
A338	126
A339	126
A340	160
A341	160
A341-0A	160
A341-0B	160
A341-OB	160
A342	160
A342A	160
A343	126
A344	123AP
A344(JAPAN)	126
A345	123AP
A345(JAPAN)	160
A346	123AP
A346(JAPAN)	160
A347	160
A348	160
A349	160
A350	126
A350A	100
A350C	126
A350H	126
A350R	126
A350T	126
A350TY	126
A350Y	126
A351	126
A351A	126
A351B	126
A352	126
A352A	126
A352B	126
A353	126
A353-9008-001	129
A353A	126
A353C	126
A354	126
A354A	126
A354B	126
A355	126
A355A	126
A356	126
A357	126
A358	126
A359	126
A360	160
A361	160
A362	160
A363	160
A364	126
A365	126
A366	126
A367	126
A368	126
A369	126
A372	160
A373	160
A374	102A
A375	160
A376	160
A376(JAPAN)	126
A377	160
A378	160
A379	160
A380	126
A381	126
A382	126
A383	126
A384	126
A385	126
A385A	126
A385D	126
A387A	6110
A387B	6110
A387C	6110
A387D	6110
A387E	6110
A387M	6110
A387N	6112
A387P	6112
A387PA	6112
A387PB	6112
A387S	6112
A387T	6112
A390A	6110
A390B	6110
A390C	6110
A390D	6110
A390E	6110
A390M	6110
A390N	6112
A390P	6112

PART NUMBER	NTE REPLACEMENT
A390PA	6112
A390PB	6112
A390S	6112
A390T	6112
A391	126
A392	126
A393	126
A393A	126
A394	126
A395	126
A396	102
A397	102
A398	126
A399	126
A399A	6110
A399C	6110
A399D	6110
A399E	6110
A399M	6110
A399N	6112
A399P	6112
A399PA	6112
A399PB	6112
A399S	6112
A399T	6112
A400	116
A400(RECT)	116
A400(TRANS)	126
A401	160
A402	159
A403	160
A404	160
A405	160
A406	102A
A407	102A
A408	160
A409	160
A410	160
A411	160
A412	126
A413	160
A414	100
A415	123AP
A415(JAPAN)	100
A416	121
A417	108
A417(JAPAN)	160
A417-19	161
A417-43	129
A417-62	121
A417-115	154
A417-116	159
A417-132	159
A417-138	129
A417-153	159
A417-154	107
A417-170	129
A417-176	159
A417-182	159
A417-184	159
A417-190	107
A417-196	159
A417-200	159
A417-201	159
A417-205	107
A417-234	129
A417-235	159
A418	108
A419	108
A419(JAPAN)	160
A420	108
A420(JAPAN)	160
A421	160
A422	160
A422-A	116
A425	160
A426	160
A427	108
A427(JAPAN)	108
A428	126
A429	288
A429-0981-12	161
A429-0	288
A429R	288
A429Y	288
A430	161
A430(JAPAN)	160
A430A	6113
A430B	6113
A430C	6113
A430D	6113
A430E	6113
A430M	6113
A430N	6115
A430P	6115
A430PA	6115
A430PB	6115
A430T	6115
A431	160
A431A	160
A432	160
A432A	160
A433	160
A434	160
A435	160
A435A	160
A435B	160
A436	126
A437	126
A437A	6113
A437B	6113
A437C	6113
A437D	6113
A437E	6113
A437M	6113
A437N	6115
A437P	6115
A437PA	6115
A437PB	6115
A437T	6115
A438	126
A440	160
A440A	160
A446	126
A447	126
A448	160
A450	160
A450H	160
A451	161
A451(JAPAN)	160
A451H	160
A452	160
A452H	160
A453	126
A454	123AP
A454(JAPAN)	126
A455	123AP
A455(GERM)	126
A455(IC)	709
A456	126
A457	126
A460	160
A461	160
A462	160
A463	160
A464	160
A465-181-19	161
A466	128
A466(JAPAN)	126
A466-2	126
A466-3	126
A466A	161
A466BLK	126
A466BLU	126
A466YEL	126
A467	229
A467(JAPAN)	159
A467-0	159
A467-0(JAPAN)	159
A467-Y	159
A467-Y(JAPAN)	159
A467G	159
A467G(JAPAN)	159
A467G-0	159
A467G-R	159
A467G-Y	159
A468	126
A469	126
A470	126
A471	126
A471-1	126
A471-2	126
A471-3	126
A472	123AP
A472(JAPAN)	126
A472A	126
A472B	126
A472C	126
A472D	126
A472E	126
A473	108
A473(JAPAN)	153
A473-GR	153
A473-0	153
A473-R	153
A473-Y	153
A473Y	153
A474	126
A476	126
A477	126
A478	126
A479	126
A480	108
A480(JAPAN)	159
A481	161
A481A0030	159
A481A0028	123AP
A481A0031	123AP
A482	161
A482(JAPAN)	159
A483	161
A484	161
A484(ZENITH)	107
A485	108
A486	161
A486(JAPAN)	189
A486E8JAPAN)	189
A488-A0001	177
A488-A0060	519
A489	161
A489(JAPAN)	153
A489-0	153
A489-R	153
A489-Y	153
A490	128
A490(JAPAN)	159
A490(POWER)	153
A490-0	292
A490Y	398
A492	161
A493	159
A493-0	159
A493GR	159
A493Y	159
A494	123AP
A494-GR	159
A494-0	159
A494-Y	159
A495	107
A495(JAPAN)	159
A495-G	159
A495-0	159
A495-R	159
A495-Y	159
A495A	159
A495D	159
A495G-GR	159
A495G-0	159
A495G-R	159
A495G-Y	159
A495W	159
A495Y	159
A496	107
A496(JAPAN)	185
A496-0	185
A496-R	185
A496-Y	185
A496Y	185
A497	108
A497(JAPAN)	129
A498(FET)	222
A498(JAPAN)	129
A498Y	129
A499	159
A499-0	159
A499-R	159
A499-Y	159
A500	116
A500(JAPAN)	159
A500-0	159
A500-R	159
A500-Y	159
A501	129
A502	159
A503	129
A503-0	129
A503-R	129
A503-Y	129
A503GR	129
A504	129
A504-R	129
A504-Y	129
A504GR	129
A505	185
A505-0	185
A505-R	185
A505-Y	185
A506	160
A507	160
A508	160
A509	290
A509-0	290
A509-Y	290
A509GR	290
A509R	290
A509Y	290
A510	159
A510-0	159
A510-R	159
A511	159
A511-0	159
A511-R	159
A512	159
A512-0	159
A512-R	159
A513	159
A513-0	159
A513-R	159
A514-040296	219
A514-04096	457
A514-062025	966
A514-022057	109
A514-033903	116
A514-025607	116
A514-028072	116
A514-028073	116
A514-023553	103
A514-023626	116
A514-027662	102
A514-027757	116
A514-032815	102
A514-033338	85
A514-0339903	116
A514-035596	116
A514-038984	156
A514-042791	109
A514-044910	159
A514-047828	188
A514-047829	189
A514-047830	186
A514-047837	189
A514-054214	130
A514-059464	7403
A514-059628	4011B
A514-061986	7410
A514-100576	56022
A514-100684	3046
A514-101843	4042B
A514-102661	4066B
A514-103420	778A
A514-103488	4070B
A515	130
A516	129
A516A	129
A517	126
A518	126
A522	130
A522(JAPAN)	159
A522-3	130
A522A	159
A523	130
A525	160
A525A	160
A525B	160
A527	129
A528	129
A530	159
A530H	159
A532	129
A532A	129
A532B	129
A532C	129
A532D	129
A532E	129
A532F	129
A537	129
A537A	129
A537AA	129
A537AB	129
A537AC	129
A537AH	129
A537B	129
A537C	129
A537H	129
A538	102A
A539	159
A539L	159
A539S	159
A539Y(EBC)	159
A539Y(KOREA)	159
A542	159
A543	192
A544	159
A545	193
A545GRN	193
A545K	193
A545KLM	193
A545L	193
A545LM	193
A546	129
A546A	129
A546B	129
A546E	129
A546H	129
A547	193
A547A	193
A548	129
A549A	288
A549AH	288
A550	159
A550A	159
A550AQ	159
A550Q	159
A550R	159
A550S	159
A551	129
A551C	129
A551D	129
A551E	129
A552	129
A556-142	109
A560	129
A561	159
A561-0	159
A561-R	159
A561-Y	159
A561GR	159
A562	290
A562-0	290A
A562-0	290A
A562-R	290
A562-Y	290
A562G	290
A562GR	290
A562R	290
A562TH-0	290A
A562TH-0	290A
A562TM-0	290A
A562TM-0	290A
A562Y	290A
A564	234
A564-0	234
A564-0	234
A564A	290A
A564ABQ	234
A564A0	234
A564AP	234
A564AQ	234
A564AS	234
A564AT	234
A564F	234
A564FQ	234
A564FR	234
A564J	234
A564P	234
A564POR	234
A564Q	290A
A564QHD	234
A564QR	234
A564R	290A
A564S	234
A564T	234
A565	159
A565A	159
A565B	159
A565C	159
A565D	159
A565K	159
A565Q	234
A566	218
A566A	218
A566B	218
A566C	218
A567	123AP
A567(JAPAN)	159
A567A	123AP
A568	159
A569	159
A569J	159
A570(TRANS)	159
A571	129
A572	130
A572-1	130
A575K	193
A575L	193
A576-0001-002	159
A576-0001-013	159
A578	234
A578A	234
A578B	234
A578C	234
A579	234
A579A	234
A579B	234
A579C	234
A580-040215	181
A580-080215	181
A580-040315	181
A580-080315	181
A580-080515	181
A580-040515	181
A592Y	159
A593	123AP
A594	129
A594-0	129
A594-R	129
A594-Y	129
A595	102A
A595C	129
A596N	6115
A596P	6115
A596PA	6115
A596PB	6115
A596T	6115
A597	129
A600	116
A603	159
A604	129
A606	129
A606S	129
A607	129
A607A	129
A607B	129
A607C	129
A607D	129
A607S	129
A607SA	129
A607SB	129
A607SC	129
A607SD	129
A608-C	159
A608-D	159
A608-E	159
A608-F	159
A608A	159
A608AE(ECB)	159
A608B	159
A608C	159
A608D	159
A608E	290A
A608F	290A
A608G	159
A608K	290A
A608KE	290A
A608KF	290A
A609	159
A609A	159
A609B	159
A609C	159
A609D	159
A609E	159
A609F	159
A609G	159
A610	159
A610B	159
A611	159
A611-4E	159
A613	218
A614	218
A615-1008	160
A615-1009	160
A615-1010	102A
A615-1011	102A
A615-1012	109
A616	218
A617K	159
A618K	159
A626	219
A627	219
A628	159
A628A	159
A628D	159
A628E	159
A628F	159
A629	159
A634	187A
A634-0	187A
A634A	187A
A634B	187A
A634C	187A
A634D	187A
A634K	187A
A634L	187A
A634M	187A
A636	187A
A636A	187A
A636B	187A
A636C	187A
A636D	187A
A636K	187A
A636L	187A
A636M	187A
A637	159
A638	288
A639	288
A640	159
A640A	159
A640B	159
A640C	159
A640D	159
A640E	159
A640L	159
A640M	159
A640S	159
A641	234
A641(NPN)	123AP
A641(PNP)	234
A641A	234
A641B	234
A641C	234
A641D	234
A641L	234
A641M	234
A641S	234
A642	159
A642-0	159
A642-0(EBC)	159
A642-254	108
A642-260	108
A642-268	108
A642-271	121MP
A642-0	159
A642-0(EBC)	159
A642A	159
A642B	159
A642C	159
A642D	159
A642E	159
A642F	159
A642L	199
A642S	199
A642W	159
A643	193
A643A	193
A643B	193
A643C	193
A643D	193
A643E	193
A643F	193
A643L	193
A643R	193
A643S	193
A643V	193
A643W	193
A644L	199
A644S	199
A645	211
A645L	199
A645S	199
A646	187A
A648	219
A648A	219
A648B	219
A648C	219
A649	281
A649L	123AP
A649S	123AP
A656	187A
A656L	187A
A656M	187A
A658	219
A659	159
A659C	159
A659D	159
A659E	159
A659F	159
A660	614
A661	298
A661-0	298
A661GR	298
A661R	298
A661Y	298
A663	219
A666	234
A666A	234
A666H	234
A666HR	234
A666QRS	234
A666R	234
A666S	234
A667-G	123AP
A667-GRN	199
A667-0	128
A667-ORG	199
A667-RED	199
A667-Y	123AP
A667-YEL	199
A667RED	108
A668-G	123AP
A668-GRN	199
A668-0	128
A668-ORG	199
A668-Y	123AP
A668-YEL	199
A669	159
A669-G	123AP
A669-GRN	199
A669-Y	123AP
A669-YEL	199
A670	153
A670A	153
A670B	153
A670C	153
A671	292
A671A	292
A671B	292
A671C	292
A671K	292
A671KA	292
A671KB	292
A671KC	292
A672	159
A672A	159
A672B	159
A672C	159
A673	294
A673A	290A
A673AA	290
A673AB	290
A673AC	290
A673AD	290
A673AE	290
A673AS	290
A673ASC	290
A673B	290
A673C	290A
A673C2	290
A673D	290
A673WT	290
A675	159
A675A	159
A675B	159
A675C	159
A677	129
A678	159
A678(SONY)	159
A679	281
A679R	281
A679Y	281
A680	281
A680R	281
A680Y	281
A683	294
A683Q	294
A683R	294
A683S	294
A684	294
A684Q	294
A684R	294
A690D	159
A690V081H97	121
A691M4	177
A691M5	177
A691M5-2	177
A692T5	116
A692T5-0	116
A692X13-4	109
A692X16-0	116
A694X1	5022A
A694X1-0A	5022A
A694X1-0A	143A
A695C	298
A695D	298
A696	288
A696C	288
A696D	288
A696E	288
A697	294
A697C	294
A697D	294
A697E	294
A699	187A
A699-0	187A
A699-O	187A
A699A	187A
A699A-Q	187A
A699AO	187A
A699AP	187A
A699AQ	187A
A699AR	187A
A699CF	187A
A699P	187A
A699Q	187A
A699R	187A
A700	187A
A700B	187A
A700Y	187A
A701	159
A701F	159
A701FJ	159
A701FO	159
A702	162
A705	163A
A707	193
A707V	193
A708	129
A708A	129
A708B	129
A708C	129
A715	185
A715A	185
A715B	185
A715C	185
A715D	185
A715FB	108
A715WBP	187A
A715WTA	185
A715WTB	185
A715WTC	185
A715WTD	185
A717	211
A718	159
A719	290
A719E	290A
A719P	290
A719Q	290
A719R	290
A719RS	290

PART NUMBER	NTE REPLACEMENT
A719S	290
A720	298
A720P	298
A720Q	298
A720R	290A
A720S	298
A721	234
A721S	234
A721T	234
A721U	234
A722	234
A722S	234
A722T	234
A722U	234
A723	159
A723A	159
A723B	159
A723C	159
A723D	159
A723E	159
A723F	159
A725	234
A725EH2AB1	125
A725F	234
A725G	234
A725H	234
A726	234
A726F	234
A726G	234
A726H	234
A726S(BCE)	234
A730	159
A731	159
A733	294
A733A	294
A733AK	290A
A733AP	290A
A733AQ	290A
A733B	294
A733C	294
A733D	294
A733E	294
A733F	294
A733H	294
A733I	294
A733IQ	294
A733P	290A
A733Q	290A
A733QP	294
A733R	294
A733Y	159
A736	129
A738C	185
A738D	185
A740	292
A740A	292
A742	129
A743	185
A743A	185
A743AA	185
A743AB	185
A743AC	185
A743AD	185
A743B	185
A743C	185
A743D	185
A744	219
A746	219
A747	123AP
A747A	123AP
A747B	199
A748	123AP
A748B	123AP
A748C	199
A748Q	153
A749	199
A749B	123AP
A749C	199
A751	193
A751Q	193
A751QR	193
A751R	193
A751S	193
A752	193
A752P	193
A752Q	193
A752R	193
A752S	193
A753	281
A753-4004-248	159
A753A	281
A753B	281
A753C	281
A754	153
A754A	153
A754B	153
A754C	153
A754D	153
A755	153
A755A	153
A755B	153
A755C	153
A755D	153
A756	281
A756A	281
A756B	281
A756C	281
A757	281
A757A	281
A757B	281
A757C	281
A758	281
A758A	281
A758B	281
A758C	281
A759	194
A759A	159
A759B	159
A764	218
A765(RECT)	5809
A765(TRANS)	218
A770	197
A771	332
A772	294
A772B1	107
A772D1	108
A772EH	107
A772FE	107
A775	292
A775A	292
A775AA	292
A775AB	292
A775AC	292
A775B	292
A775C	292
A777	298
A777R	298
A778	288
A778A	288
A778AK	288
A778K	288
A779	187A
A779K	187A
A779KB	187A
A779KC	187A
A779KD	187A
A780	708
A780AK	187A
A780AKA	187A
A780AKB	187A
A780AKC	187A
A780AKD	187A
A786Q	290A
A798(TRANS)	43
A798F(TRANS)	43
A798G(TRANS)	43
A798H(TRANS)	43
A800	125
A800(TRANS)	395
A800-511-00	129
A800-516-00	129
A800-523-01	159
A800-523-02	159
A800-527-00	159
A817Y	298
A818	240
A818-0	240
A825	234
A829	159
A829A	159
A829B	159
A829C	159
A829D	159
A829E	159
A829F	159
A833	159
A836	129
A836D	129
A836E	129
A837	281
A840	288
A840LC	288
A840LL	288
A842GR	234
A844	129
A844D	234
A844E	234
A850C(BCE)	290A
A850D(BCE)	290A
A854Q	290A
A879Q	288
A880-250-107	129
A881Q	21
A893A	91
A893AD	91
A893D	91
A909-1008	160
A909-1009	126
A909-1010	126
A909-1011	102A
A909-1012	102A
A909-1013	102A
A909-1015	109
A909-1016	110MP
A909-1017	109
A909-1018	116
A909-1019	116
A909-27125-160	108
A916-31025-5B	108
A916-31025-58	108
A921-59B	108
A921-62B	108
A921-63B	108
A921-64B	108
A921-70B	159
A933	290A
A933Q	290A
A933R	290A
A933RZ	290A
A933S	290A
A933SSJ	290A
A934	294
A935	298
A935R	298
A937	123AP
A937-1	123AP
A937-3	123AP
A937R	17
A940	398
A940D	398
A940E	398
A940R	398
A940RD	398
A940RE	398
A945-0	159
A950Y	290A
A950Y(KOREA)	290A
A952	290A
A952K	290A
A952L	290A
A952L(JAPAN)	290A
A952M	290A
A964-17887	121
A979	41
A979F	41
A979G	41
A979H	41
A984	290A
A984KF	290A
A985A	398
A991-01-0098	159
A991-01-1225	159
A991-01-1316	108
A991-01-1319	159
A991-01-3058	159
A992-00-1192	121
A995	45
A995F	45
A995G	45
A995H	45
A1000	125
A1010L	332
A1011	15023
A1011(IC)	15023
A1011IC	15023
A1013	32
A1013-0	32
A1013-O	32
A1013-R	32
A1013-Y	32
A1013R	32
A1014FA-1	290A
A1015	290A
A1015-0	290A
A1015-Y	290A
A1015FA-0	290A
A1015GR	290A
A1015Y	290A
A1016	129
A1020-0	25
A1020Y	25
A1021	374
A1024	112
A1030	159
A1048	290A
A1048-0	290A
A1048GR	290A
A1048Y	290A
A1061P	391
A1061Q	391
A1061R	391
A1062	37
A1075-B	93
A1075-G	93
A1075B	93
A1075G	93
A1078	55
A1079	55
A1086	123AP
A1087	123AP
A1091	288
A1094	34
A1094R	34
A1094Y	34
A1095	34
A1095R	34
A1095Y	34
A1104	37
A1105	37
A1106	37
A1107	34
A1108	34
A1109	108
A1109(TRANS)	59
A1110	374
A1110-P	374
A1110-Q	374
A1110-R	374
A1110-S	374
A1110P	374
A1110Q	374
A1110R	374
A1110S	374
A1114-1002	160
A1124C	121
A1141(TRANS)	37
A1146(TRANS)	37
A1166(TRANS)	34
A1169(TRANS)	59
A1170	108
A1170(TRANS)	59
A1175	290A
A1175E	290A
A1175F	290A
A1175H	290A
A1175J	290A
A1186(TRANS)	37
A1187(TRANS)	37
A1200	1003
A1201	1003
A1201-H45	1045
A1201-H-75	712
A1201B	1003
A1201C	1003
A1201C-W	1003
A1201T	1003
A1205	37
A1206K	217
A1214	159
A1215	34
A1216	37
A1220	160
A1227	37
A1232	37
A1238	199
A1243	100
A1246S	290A
A1253	2362
A1253S	2362
A1253T	2362
A1253U	2362
A1261L	183
A1314	128
A1317	2362
A1317S	2362
A1317T	2362
A1317U	2362
A1320	288
A1321	288
A1339	2362
A1339R	2362
A1339S	2362
A1339T	2362
A1339U	2362
A1341	128
A1353	1080
A1357N	1483
A1364	1004
A1364N	1004
A1365	712
A1368	738
A1373	1094
A1374	1121
A1375	1122
A1376	1122
A1377	160
A1378	160
A1379	123AP
A1380	123AP
A1383	126
A1384	126
A1390C	2362
A1396	101
A1408	374
A1409	154
A1412-1	123AP
A1414A	121
A1414A9	121
A1418	108
A1460	199
A1462	108
A1462-19	160
A1465-1	160
A1465-4	101
A1465-19	160
A1465-29	103A
A1465-49	101
A1465A	160
A1465A9	160
A1465B	160
A1465B9	160
A1465C	121
A1465C9	121
A1466-1	102A
A1466-2	102A
A1466-3	102A
A1466-19	102A
A1466-19-	102A
A1466-29	102A
A1466-39	102A
A1472-19	123
A1474-3	100
A1474-39	100
A1477A	105
A1477A9	105
A1477B	121MP
A1477B9	121MP
A1477C	121
A1477C9	121
A1484A	121
A1484A9	121
A1488B	160
A1488B9	160
A1488C	100
A1488C9	100
A1492-1	105
A1492-19	105
A1518	108
A1519	108
A1520	108
A1521	108
A1558-17	159
A1567	123AP
A1567-1	123AP
A1606E	55
A1624E	288
A1820-0203-1	941
A1820-0219-1	941M
A1821-0001-1	912
A1826-0007-1	941
A1844-17	159
A1853-0233-1	197
A1854-0533	194
A1858	101
A1867-17	159
A1884-0209	5697
A1884-0218	5697
A1901-0	288
A1901-5338	159
A1901R	288
A1946	116
A2019ZC	123AP
A2039-2	101
A2057A2-198	159
A2057B2-115	107
A2057B104-8	154
A2057B106-12	159
A2057B108-6	159
A2057B110-9	129
A2057B112-9	129
A2057B114-9	129
A2057B115-9	129
A2057B116-9	129
A2057B121-9	129
A2057B122-9	129
A2057B145-12	129
A2057B163-12	129
A2090	154
A2202	552
A2311	234
A2332	161
A2410	123AP
A2411	123AP
A2412	123AP
A2413	123AP
A2414	158
A2415	175
A2416	195A
A2417	163A
A2418	130
A2419	109
A2420	109
A2421	116
A2422	116
A2423	156
A2448	159
A2458	506
A2459	118
A2460	116
A2461	116
A2462	116
A2464	161
A2465	161
A2466	123AP
A2468	123AP
A2469	123AP
A2470	123AP
A2471	128
A2473	109
A2474	142A
A2475	113A
A2476	109
A2479	161
A2480	161
A2481	116
A2482	129
A2485	116
A2498	108
A2499	123AP
A2568(1)LD	157
A2620	154
A2652-919	133
A2746	161
A2798	159
A3148	727
A3300	1005
A3301	1006
A3350	1217
A3513	159
A3523	129
A3533	129
A3533-1	129
A3540	159
A3545	225
A3547	225
A3549	159
A3552	225
A3553	225
A3559	159
A3562	159
A3563	159
A3574	159
A3581	159
A3582	225
A3607	101
A3609	101
A3616-1	129
A3772.01	107
A4010LT	5646
A4030P	1009
A4031	1010
A4031P	1010
A4040P	5679
A4086	159
A4087	159
A4126	159
A4131P	1010
A4201	113A
A4212-A	116
A4212A	125
A4247	121
A4310	159
A4347	121
A4442	159
A4478	129
A4648	154
A4700	101
A4745	159
A4789	108
A4802-00004	159
A4815	159
A4819	154
A4822-130-40348	159
A4838	154
A4843	154
A4844	159
A4851	108
A4853	154
A4950	159
A5226-1	159
A5253	121
A5620	290A
A5640R	234
A6181-1	154
A6230-AH	5313
A6358S	928S
A6661QRS	159
A7253	154
A7520(IC)	15001
A7530N	1827
A8405	159
A8540	159
A8867	159
A9218	519
A9228-3	519
A9982-02	1633
A9982A	1231A
A10105	116
A10113	116
A10118	116
A10142	116
A10164	116
A10165	116
A10167	171
A10169	116
A11744	132
A11745	132
A12163	121
A12178	121
A12546	154
A12594	159
A12888	159
A13658E	712
A14665-2	103A
A14743	175
A15927	121
A20371	109
A20372	123AP
A21268	138A
A22008	159
A24100	123AP
A24594	118
A25762-010	154
A25762-012	154
A29035-E	5071A
A30270	159
A30278	129
A30290	159
A30302	121
A34715	121
A35084	121
A35201	121
A35260	121
A36508	109
A36539	142A
A36577	129
A36896	121
A40410	129
A41440	159
A42946	113A
A42946B	113A
A46051-1	124
A47392R-0	128
A59625-1	159
A59625-2	159
A59625-3	159
A59625-4	159
A59625-5	159
A59625-6	159
A59625-7	159
A59625-8	159
A59625-9	159
A59625-10	159
A59625-11	159
A59625-12	159
A71687-1	159
A72466D2	177
A76228	199
A78331	159
A94004	121
A94037	159
A94063	129
A95115	101
A95211	101
A95227	159
A95232	159
A112363	130
A116078	159
A116081	154
A116084	129
A116284	129
A118284	159
A119730	159
A119983	129
A121467	159
A121659	159
A124047	159
A124623	108
A124624	108
A124755	159
A125329	108
A126524	159
A126700	159
A126705	154
A126707	159
A126715	159
A126718	159
A126719	159
A126724	129
A127364	176
A127712	154
A129509	108
A129510	108
A129511	108
A129512	108
A129513	108
A129571	108
A129572	108
A129573	108
A129574	108
A129697	159
A129699	159
A130139	159
A188103	192
A190429	159
A198794-1	101
A218012DS	121
A297074C11	129
A300043-06	176
A322805-50-1	128
A335854	912
A391593	181
A417014	181
A417032	152
A417033	130
A417034	192
A417756	197
A489751-028	159
A489751-031	159
A573501	154
A600040	2359
A610074-1	159
A610075-1	154
A610083	159
A610083-1	159
A610083-2	159
A610083-3	159
A610110-1	159
A610120-1	159
A631790L	289
A633751	299
A650232E	194
A650235G	290A
A650238A	159
A650372D	290
A650923F	290A
A650925H	290A
A660031	121MP
A660097	121
A670720K	229
A670722D	123AP
A670729B	123AP
A671656A	295
A671656K	295
A673351K	289
A673354K	289
A673355H	289
A673355K	289
A675313F	171
A675315F	171
A675318A	287
A678760A	198
A678760C	124
A678971C	198
A678971D	376
A683565	152
A684606	162
A701584-00	159
A701589-00	159
A710015	5014A
A720657	5547
A758011	125
A759500	125
A772738	108
A772739	108
A815185	129
A815185E	129
A815199	159
A815199-6	159
A815203-5	121MP
A815211	159
A815213	159
A815229	159
A815247	159
A970246	159
A970248	159
A970251	159
A970254	159
A984193	159
A1471114-1	159
A1473549-1	129
A1473563-1	159
A1473570-1	159
A1473574-1	159
A1473590-1	159
A1473591-1	159
A1473597-1	159
A1473616-1	129
A2006681-95	108
A2057013-0004	159
A2057013-0701	159
A2057013-0702	159
A2057013-0703	159
A2090056-1	121
A2090056-5	121
A2090056-27	121
A2091859-0025	121
A2091859-0720	121

PART NUMBER	NTE REPLACEMENT
A2091859-10	121
A2091859-11	121
A2092418	101
A2092418-0711	101
A2092693-0724	108
A2092693-0725	108
A2370773	199
A2498512	159
A3011112	128
A3097563	5401
A3115621	116
A3115690	552
A3170717	154
A3170757	225
A3902441	130
A4037764-2	129
A5010005	519
A5320111	159
A6000020	2355
A6000030	2357
A6000040	2359
A6002020	2355
A6002030	2357
A6002040	2359
A6010030	2358
A6012040	2360
A6041840	458
A6041876	458
A6041880	458
A6048403	459
A6059121	290
A6235070	399
A6314440	289A
A6314446	289A
A6317420	85
A6317440	85
A6317460	85
A6317480	85
A6317520	85
A6317526	85
A6317540	85
A6317547	85
A6317560	85
A6317562	85
A6317567	85
A6317581	85
A6317800	165
A6317900	238
A6317901	238
A6319300	85
A6319302	85
A6319340	85
A6319400	376
A6319403	376
A6319500	375
A6319550	375
A6319576	375
A6321241	289A
A6324842	399
A6324922	399
A6324940	399
A6324942	399
A6324961	399
A6324972	399
A6324992	399
A6325060	399
A6325070	399
A6325077	399
A6325206	375
A6328328	31
A6328333	31
A6330000	399
A6330004	399
A6330059	399
A6330069	399
A6333310	293
A6333320	293
A6333346	293
A6333751	107
A6342200	85
A6346801	238
A6358055	36
A6360250	399
A6363200	2408
A6502380	290A
A6502460	374
A6509120	290A
A6509121	290A
A6509140	290A
A6509141	290A
A6531140	298
A6532300	292
A6532320	398
A6532841	288
A6532921	290A
A6532941	290A
A6533730	153
A6533750	32
A6533760	32
A6534020	290A
A6534021	290A
A6534040	290A
A6534045	290A
A6534060	290A
A6534063	290A
A6534120	294
A6534125	294
A6546025	37
A6610160	153
A6623870	332
A6625365	37
A6707244	85
A6707298	85
A6708303	85
A6708850	289
A6708871	85
A6716560	295
A6716660	374
A6733280	199
A6733340	289A
A6733560	289A
A6734590	188
A6734592	85
A6738701	162
A6754194H	199
A6771373	165
A6773802	94
A6773812	94
A6823560	152
A6836940	284
A6841063	3098
A6841420	331
A6841440	331
A6842185	377
A6843401	175
A6846701	389
A6846801	165
A6846806	165
A6846860	165
A6847905	89
A6848004	89
A6848103	89
A6848520	152
A6848908	56
A6862752	243
A6862754	243
A6867051	2335
A6867061	2335
A6868654	2302
A6868673	2302
A6868702	2302
A6868706	2302
A6868757	2302
A6868767	2302
A7000900	109
A7001800	109
A7001957	109
A7102001	552
A7109304	5004A
A7109395	5007A
A7109432	5008A
A7109433	5008A
A7109473	5009A
A7109890	5013A
A7110015	5014A
A7110016	5011A
A7110017	5011A
A7110018	5011A
A7110040	5010A
A7110041	5010A
A7110052	5013A
A7110055	5013A
A7110076	5013A
A7110077	5013A
A7110114	5014A
A7110115	5014A
A7110116	5014A
A7110151	138A
A7110159	138A
A7110160	5015A
A7110207	5072A
A7110209	5016A
A7110263	5018A
A7110360	5020A
A7110410	5021A
A7110411	5021A
A7110412	5021A
A7110461	5022A
A7110502	135A
A7110508	5024A
A7110509	5024A
A7110563	5025A
A7110604	5027A
A7110633	5029A
A7110634	5029A
A7110645	5030A
A7110663	5029A
A7110743	5036A
A7116105	5008A
A7116115	5008A
A7116205	5010T1
A7116215	5009A
A7116305	5010A
A7116315	5010T1
A7116405	5010A
A7116415	5011A
A7116505	5013T1
A7116515	5013A
A7116615	5014A
A7116625	5014A
A7116705	5014A
A7116805	5015A
A7116825	5016A
A7116915	5018A
A7116925	5018A
A7117005	5018A
A7117205	5021T1
A7117215	5021T1
A7117425	5024A
A7117715	5028A
A7118925	5018A
A7150041	177
A7150258	177
A7150351	519
A7246602	177
A7246653	177
A7246700	177
A7246711	177
A7246727	177
A7249601	519
A7252824	614
A7272130	5093A
A7272143	5093A
A7275400	177
A7279039	121
A7279049	121
A7283550	519
A7285774	121
A7285778	121
A7285900	5011A
A7286100	137A
A7286107	5013A
A7286120	5013A
A7286201	5071A
A7287500	142A
A7287513	142A
A7288504	5081A
A7289047	121
A7289800	506
A7290594	121
A7291252	121
A7297043	121
A7297092	121
A7297093	121
A7509201	116
A7547053	116
A7558521	116
A7568160	552
A7568250	552
A7568300	552
A7568460	552
A7568475	552
A7568480	552
A7568487	552
A7568500	116
A7568521	116
A7568700	116
A7568719	116
A7568752	552
A7568754	116
A7568800	116
A7570013-01	159
A7572100	116
A7572200	116
A7576004-01	159
A7579500	506
A7580110	125
A7580111	125
A7580310	156
A7580656	552
A7580660	552
A7580910	506
A7582000	506
A7671002	5312
A7801166	5405
A7801233	5405
A7803610	5465
A7978850	552
A7978855	552
A7986480	116
A8015613	129
A8632853	383
A8641063	3081
A8641301	3092
A8643100	3098
A11159761	519
A11200482	159
A11414257	123AP
A20030703-0702	159
A23114050	159
A23114051	159
A23114130	154
A23114550	159
A25114130	154
A43021415	123AP
A43023843	130
A43023845	159
A63174020	85
A67531140	298
A71150041	177
A71909304	5004A
A75779500	125
A80052402	130
A80414120	130
A80414130	130
A-04049-B	116
A-04091-A	116
A-04092	116
A-04092-B	116
A-04093	116
A-04093A	116
A-0205	170
A-04901A	116
A-04	116
A-025	169
A-04212-A	116
A-04212-B	116
A-04226	116
A-042313	116
A-04242	116
A-1.5-01	116
A-6-67703	130
A-6-67703-A-7	130
A-18	130
A-86-9-1	178MP
A-95-5281	116
A-95-5289	116
A-95-5296	118
A-95-5314	500A
A-100(RECT)	116
A-102	126
A-106	123AP
A-128	123AP
A-144-3078	5547
A-156	123AP
A-158B	123AP
A-158C	123AP
A-168	123AP
A-195C	159
A-415	123AP
A-473	229
A-494	123AP
A-514-027662	102A
A-567	103
A-567A	123AP
A-1005-725	159
A-1141 6062	123AP
A-1141-5932	128
A-1141-6062	123AP
A-1200 18	123
A-1379	123AP
A-1380	123AP
A-1384	160
A-1567	123AP
A-1634 1125	519
A-1634-1125	519
A-1853-0300-1	234
A-1853-0009-1	106
A-1853-0010-1	106
A-1853-0020-1	159
A-1853-0050-1	234
A-1853-0016-1	159
A-1853-0027-1	159
A-1853-0034-1	106
A-1853-0036-1	159
A-1853-0039-1	159
A-1853-0041-1	129
A-1853-0049-1	159
A-1853-0053-1	218
A-1853-0058-1	159
A-1853-0062-1	159
A-1853-0063-1	218
A-1853-0065-1	159
A-1853-0066-1	234
A-1853-0077-1	234
A-1853-0086-1	234
A-1853-0092-1	159
A-1853-0098-1	234
A-1853-0099-1	159
A-1853-0220-1	218
A-1853-0404-1	199
A-1853-0233-1	153
A-1853-0234-1	153
A-1853-0254-1	153
A-1853-0285-1	159
A-1853-0321-1	159
A-1854-0003-1	123AP
A-1854-0090-1	128
A-1854-0019-1	123AP
A-1854-0022-1	128
A-1854-0023-1	199
A-1854-0025-1	123AP
A-1854-0027-1	123AP
A-1854-0071-1	123AP
A-1854-0087-1	128
A-1854-0088-1	199
A-1854-0092-1	107
A-1854-0094-1	123AP
A-1854-0099-1	123AP
A-1854-0201-1	123AP
A-1854-0408-1	123AP
A-1854-0420-1	152
A-1854-0215-1	123AP
A-1854-0241-1	123AP
A-1854-0246-1	123AP
A-1854-0251-1	123AP
A-1854-0255-1	123AP
A-1854-0284-1	199
A-1854-0291-1	130
A-1854-0294-1	130
A-1854-0354-1	123AP
A-1854-0358-1	194
A-1854-0365-1	194
A-1854-0434-1	123AP
A-1854-0449-1	175
A-1854-0458	181
A-1854-0464	152
A-1854-0471-1	123AP
A-1854-0474-1	194
A-1854-0485	108
A-1854-0492-1	123AP
A-1854-0533	194
A-1854-0541-1	123AP
A-1854-0554-1	123AP
A-1854-JBD1	108
A-1901-0050-1	519
A-1901-0025-1	177
A-1901-0033-1	177
A-1901-0053-1	177
A-1901-0096-1	177
A-1901-0150-1	177
A-1901-044-1	519
A-1901-0156-1	177
A-1901-0196-1	519
A-1901-0461-1	519
A-1901-1067-1	177
A-1946	116
A-2008-9140	519
A-2010-5409-B	912
A-2010-5409-RB	912
A-9982	1231A
A-9982-02A	1633
A-9982-07	1231A
A-9982A	1231A
A-10105	116
A-10113	116
A-10118	116
A-10167	171
A-12791	152
A-13284	1548
A-36617	519
A-54806-A	5547
A-113110	159
A-113335	5942
A-113367(DIODE)	519
A-113367(RECT)	125
A-118038	125
A-120018	128
A-120077	5021A
A-120125(DIODE)	177
A-120125(RECT)	125
A-120278	123AP
A-120304	175
A-120327	130
A-120407	5188A
A-120417	159
A-120420	5005A
A-120526	159
A-125278	5013A
A-125332	123AP
A-132591	5802
A-134166-2	142A
A-140605	130
A-11095924	123AP
A-11166527	130
A-11237336	123AP
A-11790169	519
A-B1000-139	112
A-B1000-162	112
A-PS-1503399-0-0	218
A-PS-1509730-0-0	181
A-PS-1510196-0-0	181
AA015	112
AA1	100
AA1M	225
AA2	101
AA2A	225
AA2K	225
AA2SB240A	121
AA2Z	225
AA3	160
AA3M	225
AA4	121
AA5	105
AA8-1-70	160
AA8-1-705	160
AA8-1A9G	160
AA10	147A
AA10-1	147A
AA50	116
AA100	116
AA101	5402
AA102	5404
AA107	5401
AA108	5402
AA109	5402
AA111	109
AA112	109
AA112P	109
AA113	109
AA114	109
AA115	5402
AA116	109
AA116(SCR)	5404
AA117	109
AA118	109
AA119	109
AA120	109
AA121	109
AA123	109
AA130	109
AA131	109
AA132	109
AA133	225
AA134	109
AA135	109
AA136	109
AA137	109
AA138	109
AA139	109
AA140	109
AA142	109
AA143	109
AA143S	109
AA144	109
AA144SR	109
AA200	116
AA210	109
AA218	109
AA300	116
AA310	225
AA400	116
AA500	116
AA600	116
AA779	109
AA800	125
AA1000	125
AA113852-2	909
AAY10-120	5872
AAY15	109
AAY18	109
AAY22	109
AAY27	109
AAY30	109
AAY33	109
AAY46	109
AAY139	109
AAY-22	116
AAZ10	109
AAZ18	109
AAZ18D	116
AB1-9	139A
AB1-11	5020A
AB1-35	147A
AB50	156
AB100	156
AB200	156
AB300	156
AB400	156
AB500	156
AB600	156
AB700	156
AB800	156
AB1000	156
AB2027	146A
AB4164ANP-15	4164
ABF	184
AC08BGM	5633
AC08BGML	5633
AC08BGR	5633
AC08DGM	5635
AC08DGML	5635
AC08DGMR	5635
AC08EGM	5636
AC08EGML	5636
AC08EGMR	5636
AC08FGM	5637
AC08FGML	5637
AC08FGMR	5637
AC10BGM	5633
AC10BGML	5633
AC10BGMR	5633
AC10DGM	5635
AC10DGMR	5635
AC10EGM	5636
AC10EGML	5636
AC10EGRM	5636
AC10FGM	5637
AC10FGML	5637
AC10FGMR	5637
AC12BGMR	56004
AC12DGML	56006
AC12DGMR	56006
AC12EGML	56008
AC12EGMR	56008
AC18M/U	103A
AC30	156
AC50	156
AC50(DIODE)	177
AC50(RECT)	5800
AC100	156
AC100(PHILCO)	283
AC105	102A
AC106	102A
AC107	160
AC107M	160
AC107N	160
AC108	102A
AC109	102A
AC110	102A
AC113	102A
AC114	102A
AC115	102A
AC116	102A
AC116-G	100
AC116-GRN	100
AC116-Y	100
AC116-YEL	100
AC117	102A
AC117A	102A
AC117B	102A
AC117P	102A
AC118	102A
AC119	102A
AC120	102A
AC121	102A
AC121-IV	102A
AC121-V	102A
AC121-VI	102A
AC121-VII	102A
AC121IV	158
AC121V	158
AC121VI	158
AC121VII	158
AC122	102A
AC122-30	102A
AC122-G	100
AC122-GRN	158
AC122-R	100
AC122-RED	158
AC122-V	100
AC122-VIO	158
AC122-Y	100
AC122-YEL	158
AC122/30-GRN	100
AC122/30-RED	100
AC122/30-YEL	100
AC122GRN	102A
AC122RED	102A
AC122YEL	102A
AC123	102A
AC123-GRN	100
AC123-YEL	100
AC124	102A
AC125	102A
AC126	102A
AC127	103A
AC127-01	103A
AC127-132	103A
AC128	158
AC128-01	158
AC128/01	158
AC128K	158
AC129	160
AC130	101
AC131	102A
AC131-30	158
AC132	102A
AC132-01	102A
AC133A	102A
AC134	102A
AC135	102A
AC136	102A
AC137	102A
AC138	158
AC139	158
AC141	103A
AC141B	103A
AC141K	103A
AC142	158
AC142K	158
AC148	121
AC150	102A
AC150-G	100
AC150-GRN	160
AC150-V	100
AC150-VIO	100
AC150-Y	100
AC150-YEL	160
AC150GRN	102A
AC150YEL	102A
AC151	102A
AC151-IV	102A
AC151-RIV	102A
AC151-RV	102A
AC151-RVI	102A
AC151-V	102A
AC151-VI	102A
AC151-VII	102A
AC151IV	158
AC151R	102A
AC151RIV	158
AC151RV	158
AC151RVI	158
AC151V	158
AC151VI	158
AC151VII	158
AC152	158
AC152-IV	102A
AC152-V	102A
AC152-VI	102A
AC152IV	158
AC152V	158
AC152VI	158
AC153	158
AC153K	158
AC154	158
AC155	102A
AC156	102A
AC157	103
AC160	102A
AC160-G	100
AC160-GRN	160
AC160-RED	160
AC160-V	100
AC160-VIO	160
AC160-YEL	160
AC160A	102A
AC160B	102A
AC160GRN	102A
AC160RED	102A
AC160YEL	102A
AC161	102A
AC162	102A
AC163	102A
AC164	126
AC165	102A
AC166	158
AC167	158
AC168	102A
AC169	126
AC170	102A
AC171	102A
AC172	103A
AC173	102A
AC175	103A
AC175A	103A
AC175B	103A
AC175P	103A
AC176	103A
AC176K	158
AC177	100
AC178	158
AC179	103A
AC180	158
AC180K	158
AC181	103A
AC181K	103A
AC182	102A
AC183	103A
AC184	102A
AC185	103A
AC186	103A
AC187	103A
AC187/01	101
AC187K	103A
AC187R	103A
AC188	158
AC188/01	158
AC188K	158
AC191	102A
AC192	102A
AC193	158
AC193K	158
AC194	103A
AC194K	103A
AC200	156
AC300	5804

PART NUMBER	NTE REPLACEMENT
AC400	5804
AC500	5806
AC600	5806
AC800	5808
AC1000	5809
AC9082	159
AC9083	159
AC9084	159
AC9085	159
AC12801	158
AC18701	107
AC18801	158
AC-107	102A
AC-113	102A
AC-113A	102A
AC-114	102A
AC-116	102A
AC-117	102A
AC-117A	102A
AC-117P	102A
AC-121IV	158
AC-122	102A
AC-123	102A
AC-125	102A
AC-126	102A
AC-127	103A
AC-128	158
AC-132	102A
AC-141B(NPN)	103A
AC-141B(PNP)	102A
AC-141K(NPN)	103A
AC-141K(PNP)	102A
AC-150	102A
AC-151	102A
AC-152	102A
AC-154	102A
AC-155	102A
AC-156	102A
AC-157	103A
AC-161	102A
AC-162	102A
AC-165	102A
AC-166	102A
AC-167	102A
AC-168	102A
AC-169	102A
AC-172	103A
AC-175A	123AP
AC-175B	123AP
AC-175P	123AP
AC-183(NPN)	103A
AC-183(PNP)	102A
AC-186(NPN)	103A
AC-186(PNP)	102A
AC-N7B	102A
ACDC9000-1	159
AC08BGM	5633
AC08BGML	5633
AC08BGR	5633
AC08DGM	5635
AC08DGML	5635
AC08EGM	5636
AC08EGML	5636
AC08EGMR	5636
AC08FGM	5637
AC08FGML	5637
AC08FGMR	5637
ACR83-1001	126
ACR83-1002	126
ACR83-1003	126
ACR83-1004	100
ACR83-1005	100
ACR83-1006	100
ACR83-1007	109
ACR83-1008	116
ACR810-101	126
ACR810-102	126
ACR810-103	126
ACR810-104	100
ACR810-105	100
ACR810-106	100
ACR810-107	109
ACR810-108	116
ACY16	121
ACY17	102
ACY17-1	102A
ACY18	102
ACY18-1	102A
ACY19	102
ACY19-1	102A
ACY20	102A
ACY20-1	102A
ACY21	102A
ACY21-1	102A
ACY22	102A
ACY22-1	102A
ACY23	102A
ACY23-V	102A
ACY23-VI	102A
ACY23V	158
ACY23VI	158
ACY24	160
ACY27	102A
ACY28	102A
ACY29	102A
ACY30	102A
ACY31	102A
ACY32	102A
ACY32-V	102A
ACY32-VI	102A
ACY32V	158
ACY32VI	158
ACY33	102A
ACY33-VI	158

PART NUMBER	NTE REPLACEMENT
ACY33-VII	158
ACY33-VIII	158
ACY33VI	158
ACY33VII	158
ACY34	102A
ACY35	102A
ACY36	102A
ACY38	102A
ACY39	176
ACY40	100
ACY41	102A
ACY41-1	102A
ACY44	102A
ACY44-1	102A
ACY-17	102
ACY-18	102
ACY-19	102
ACY-20	102
ACY-21	102A
ACY-22	102A
ACY-23	102A
ACY-32	102A
ACZ	160
ACZ21	160
AD8	506
AD10	116
AD29	156
AD29A-4	156
AD29A-5	156
AD29A-6	156
AD29A-9	156
AD29E4	159
AD29E5	159
AD29E6	159
AD29E7	159
AD29E8	159
AD29E9	159
AD29E10	159
AD29E-1	159
AD29E-2	159
AD29S	506
AD30	177
AD30A1	159
AD30A2	159
AD30A3	159
AD30A4	159
AD30A5	159
AD50	116
AD100	116
AD100(DIODE)	177
AD101AH	1171
AD103	121
AD104	121
AD105	121
AD130	121
AD130-III	121
AD130-IV	121
AD130-V	121
AD131	121
AD131-III	121
AD131-IV	121
AD131-V	121
AD132	121
AD133	179
AD138	121
AD138/50	121
AD139	104
AD140	121
AD142	179
AD143	179
AD143B	179
AD143R	121
AD145	121
AD148	121
AD149	104
AD149-01	121
AD149-02	121
AD149-IV	121
AD149-V	121
AD149B	121
AD149C	121
AD150	121
AD150(DIODE)	177
AD150-IV	121
AD150-V	121
AD152	131
AD153	121
AD155	131
AD156	131
AD157	155
AD159	121
AD160	175
AD161	155
AD162	131
AD163	127
AD164	131
AD165	155
AD166	127
AD167	127
AD169	131
AD200	116
AD200(DIODE)	177
AD201AH	1171
AD201H	1171
AD262	131
AD263	131
AD301AH	1171
AD301AN	976
AD710CH	910
AD710CN	910D
AD711CH	911
AD741	941
AD741C	941
AD741CH	941

PART NUMBER	NTE REPLACEMENT
AD741CN	941D
AD4001	116
AD4002	125
AD4003	125
AD4004	125
AD4005	125
AD4006	125
AD4007	125
AD13850	121
AD-1UF	116
AD-2	5808
AD-29	506
AD-29B	506
AD-29S	506
AD-139	131
AD-140	121
AD-148	121
AD-149	121
AD-150	121
AD-152	121
AD-156	121
AD-157	121
AD-159	121
AD-162	131
ADC0802LCD	2053
ADC0802LCN	2053
ADC0803LCD	2053
ADC0803LCN	2053
ADC0804LCD	2053
ADC0804LCN	2053
ADX0214	137A
ADX1103	5046A
ADX1148	116
ADX1152	519
ADX1364	519
ADX1473	5007A
ADX1474	5801
ADX1518	5002A
ADY22	121
ADY23	121
ADY24	121
ADY26	213
ADY27	121
ADY28	121
ADY-26	105
ADY-27	102A
ADZ11	105
ADZ12	105
AE1A	156
AE1B	156
AE1C	156
AE1D	156
AE1E	156
AE1F	156
AE1G	156
AE3A	5800
AE3B	5801
AE3C	5802
AE3D	5804
AE3E	5806
AE3F	5808
AE3G	5809
AE10	177
AE30	177
AE50	177
AE100	177
AE150	177
AE200	177
AE304	743
AE320	1232
AE904	743
AE904-02	743
AE904-51	743
AE906	726
AE906-51	726
AE907	737
AE907-51	737
AE907@	723
AE908	789
AE908-51	789
AE920	1232
AE920-7B	1232
AE920-7X	1232
AE920-8	1288
AE-50	102A
AE-904-03	743
AE-906	726
AE-907	737
AEX9846	130
AEX79846	130
AEX-85715	129
AF1	506
AF101	160
AF102	160
AF105	126
AF105A	160
AF106	160
AF106A	160
AF107	160
AF108	126
AF109	160
AF109R	160
AF110	160
AF111	160
AF112	160
AF113	160
AF114	160
AF114N	160
AF115	160
AF115N	160
AF116	160
AF116N	160
AF117	160
AF117C	160

PART NUMBER	NTE REPLACEMENT
AF117N	160
AF118	160
AF119	160
AF120	126
AF121	160
AF121S	160
AF122	160
AF125	160
AF126	160
AF127	160
AF127/01	160
AF128	160
AF129	126
AF130	126
AF131	126
AF132	126
AF133	126
AF134	126
AF135	126
AF136	126
AF137	126
AF137A	160
AF138	126
AF138/20	160
AF138/290	100
AF139	160
AF142	160
AF143	160
AF144	126
AF146	160
AF147	160
AF148	160
AF149	160
AF150	160
AF164	160
AF165	160
AF166	160
AF167	160
AF168	160
AF169	160
AF170	160
AF171	160
AF172	160
AF178	160
AF179	160
AF180	160
AF181	160
AF182	160
AF185	160
AF186	160
AF186G	160
AF186W	160
AF187	102A
AF188	102A
AF192	101
AF193	160
AF200	160
AF200U	102
AF201	160
AF201C	160
AF201U	102
AF202	160
AF202L	160
AF202S	160
AF239	160
AF239S	160
AF240	160
AF251	160
AF252	160
AF253	160
AF256	160
AF267	160
AF279	160
AF279S	160
AF280	121
AF306	160
AF367	160
AF369	160
AF699	159
AF3570	159
AF3590	159
AF21490	159
AF-101	100
AF-105A	160
AF-106	160
AF-109	160
AF-121	160
AF-137	160
AF-166	160
AF-182	160
AFC3527	123AP
AFCS1170F	159
AFS24226	159
AFS-160-1017	109
AFS-160-1020	110MP
AFS-160-1021	116
AFS-760-1017	109
AFT0019M	159
AFT052	159
AFT1341	159
AFT1746	159
AFY10	126
AFY11	126
AFY12	160
AFY14	160
AFY15	160
AFY16	160
AFY18	126
AFY18C	160
AFY18D	160
AFY18E	160
AFY19	160
AFY34	160
AFY37	160

PART NUMBER	NTE REPLACEMENT
AFY39	160
AFY40	160
AFY40K	160
AFY40R	160
AFY41	160
AFY42	160
AFZ11	160
AFZ12	160
AFZ23	100
AG6	188
AG30	177
AG100D	116
AG100G	116
AG100J	116
AG134	126
AH14	125
AH805	125
AH810	125
AH814	125
AH815	125
AH1005	125
AH1010	125
AH1015	125
AIE	161
AJ5	116
AJ10	116
AJ15	116
AJ20	116
AJ25	116
AJ30	116
AJ35	116
AJ40	116
AJ50	116
AJ60	116
AJ103	179
AJ-30	116
AK03	585
AL01Z	587
AL1C	113A
AL100	127
AL101	121
AL102	127
AL103	127
AL112	127
AL113	179
AL210	160
ALB6494612	196
ALC1	113A
ALC1A	113A
ALC-1A	178MP
ALD-35	123AP
ALD-3141	123AP
ALS-8922	123AP
ALZ10	100
AM	128
AM06200012	5014A
AM06200013	519
AM06200014	552
AM06200017	109
AM06200065	5801
AM06200076	503
AM005	116
AM010	116
AM020	116
AM030	116
AM040	116
AM050	116
AM060	116
AM01Z	116
AM025	116
AM035	116
AM1	5830
AM2	5830
AM3	5830
AM4	5830
AM5	5830
AM9	154
AM11	5832
AM12	5832
AM13	5832
AM21	5834
AM22	5834
AM23	5834
AM24	5834
AM31	5836
AM32	5836
AM33	5836
AM34	5836
AM41	5838
AM42	5838
AM43	5838
AM44	5838
AM51	5840
AM52	5840
AM53	5840
AM54	5840
AM62	116
AM63	5842
AM64	5842
AM65	116
AM66	116
AM74LS158PC	74LS158
AM74LS374PC	74LS374
AM300	177
AM300A	177
AM301	177
AM301A	177
AM302	177
AM302A	177
AM303	177
AM303A	177
AM304	177
AM304A	177
AM305	177

PART NUMBER	NTE REPLACEMENT
AM305A	177
AM306	177
AM306A	177
AM307	177
AM307A	177
AM308	177
AM308A	177
AM405	116
AM410	116
AM415	116
AM420	116
AM425	116
AM430	116
AM435	116
AM440	116
AM445	116
AM450	116
AM460	116
AM620	177
AM620A	177
AM626	177
AM626A	177
AM632	177
AM632A	177
AM723HM	923
AM733DC	927D
AM733HC	927
AM741CT	941
AM741HC	941
AM747CT	947
AM747HC	947
AM747HM	947
AM747T	947
AM2708C	2708
AM2708DC	2708
AM2708PC	2708
AM2716 24P	2716
AM2716C	2716
AM2716DC	2716
AM2716PC	2716
AM2732	2732A
AM2732-2	2732A
AM2732-3	2732A
AM2732-4	2732A
AM2764ADC	2764
AM3235	130
AM8080A	8080A
AM9016DPC	2117
AM9060	2107
AM9060CDC	2107
AM9060CPC	2107
AM9060DDC	2107
AM9060DPC	2107
AM9060EDC	2107
AM9060EPC	2107
AM27128	21128
AM27128-3	21128
AM27128-4	21128
AM27128-25	21128
AM27128-30	21128
AM27128-40	21128
AM161011H	123AP
AM161011J	123AP
AM161015H	290A
AM161016H	123AP
AM161038H	85
AM161039H	85
AM161040H	288
AM161041H	287
AM161043H	153
AM161044E	375
AM161050H	159
AM162005A	116
AM167001A	712
AM167013A	749
AM167014A	747
AM-010	116
AM-020	116
AM-030	116
AM-060	116
AM-025	116
AM-035	116
AM-6-5	116
AM-22	116
AM-33	116
AM-G22	116
AM-G-5	116
AM-G-5A	125
AM-G-5C	125
AM-G-10	116
AM-G-11	170
AM-G-22	116
AMC6200065	5801
AMD780	714
AMD-780	714
AMF101	182
AMF104	130
AMF105	130
AMF106	163A
AMF115	130
AMF116	130
AMF117	130
AMF117A	130
AMF118	130
AMF118A	130
AMF119	130
AMF119A	130
AMF120	130
AMF120A	130
AMF201	130
AMF201B	181
AMF201C	181
AMF201D	328
AMF201E	284

PART NUMBER	NTE REPLACEMENT
AMF210	130
AMF210A	130
AMF210B	181
AMF210C	162
AMF-121	130
AMLM101AH	1171
AMLM101H	1171
AMLM201	1171
AMLM201A	1171
AMLM201AH	1171
AMLM201H	1171
AMLM301	1171
AMLM301A	1171
AMLM301AH	1171
AMP2919-2	130
AMP2970-2	129
AMP-2971-4	128
AMU5B7741393	941
AMU5B7747393	947
AMU5R7723312	923
AMU5R7723393	923
AMU6A7723393	923D
AMU6A7741393	941D
AMX3528	291
AMX3548	923D
AMX3550	74LS00
AMX3551	74LS02
AMX3552	74LS04
AMX3553	74LS05
AMX3554	74LS11
AMX3555	74LS20
AMX3556	74LS30
AMX3557	74LS32
AMX3558	74LS74A
AMX3560	74LS93
AMX3561	74LS132
AMX3562	74LS153
AMX3563	74LS157
AMX3564	74LS166
AMX3565	74LS174
AMX3566	74LS175
AMX3567	74LS367
AMX3568	74LS368
AMX3573	75452B
AMX3582	291
AMX3583	123AP
AMX3584	159
AMX3655	7404
AMX3675	7406
AMX3683	7438
AMX3684	7407
AMX3688	927D
AMX3698	74LS08
AMX3701	74LS86
AMX3706	74LS393
AMX3716	74LS14
AMX3799	219
AMX3800	74LS139
AMX3803	74LS123
AMX3804	74LS90
AMX3810	74LS221
AMX3864	74LS244
AMX3867	75188
AMX3868	75189
AMX3898	74LS10
AMX3955	74123
AMX4178	123AP
AMX4181	995
AMX4188	967
AMX4200	834
AMX4225	74LS240
AMX4227	74LS273
AMX4258	941M
AMX4260	1917
AMX4261	6880
AMX4263	123A
AMX4326	927D
AMX4327	922M
AMX4328	74LS38
AMX4330	159
AMX4331	261
AMX4470	74LS245
AMX4574	855
AMX4577	966
AMX4578	6821
AMX4582	5332
AMX4583	74LS138
AMX4584	4050B
AMX4585	4529B
AMX4658	74LS27
AMX4659	74LS145
AMX4660	74LS266
AMX4661	778A
AMX4663	74LS629
AMX4666	4040B
AMX-3551	74LS02
AMX-3683	7438
AMX-3716	74LS14
AMX-4591	7406
AMX-4945	74S04
AN	123AP
AN78L05	977
AN78M05	960
AN78M05F	960
AN78M05LB	960
AN78M08	964
AN78M09	1902
AN78M09-LC	1902
AN78M12	966
AN78M12-LB	966
AN78M12LB	966
AN78M15	968
AN78M15LB	968
AN78N05	116

PART NUMBER	NTE REPLACEMENT
AN90C21	1828
AN90C22	1829
AN103	1192
AN103-0	1192
AN103G	1192
AN115	1226
AN136	1053
AN155	147A
AN158	749
AN203	1054
AN203AA	1054
AN203BA	1054
AN203BB	1054
AN203C	1054
AN206	1057
AN206AB	1057
AN206B	1057
AN206S	1057
AN210	1055
AN210A	1055
AN210B	1055
AN210C	1055
AN210D	1055
AN211	1056
AN211A	1056
AN211AB	1056
AN211B	1056
AN214	1058
AN214P	1058
AN214PQR	1058
AN214Q	1058
AN214R	1058
AN217	1060
AN217AA	1060
AN217AB	1060
AN217BA	1060
AN217BB	1060
AN217CA	1060
AN217CB	1060
AN217P	1060
AN217PBB	1060
AN220	1061
AN221	712
AN222	1004
AN225	1062
AN229	1064
AN236	1123
AN238	749
AN238S	749
AN239	1161
AN240	712
AN240D	712
AN240P	712
AN240PD	712
AN240PN	712
AN240S	712
AN245	1164
AN246	1164
AN253	1072
AN253AB	1072
AN253B	1072
AN253BB	1072
AN259	1487
AN262	1263
AN271	1181
AN271B	1181
AN274	1137
AN277	1073
AN277-AB	1073
AN277A	1073
AN277AB	1073
AN277B	1073
AN277BA	1073
AN278	1448
AN287	1569
AN301	1446
AN302	1264
AN303	1265
AN304	1400
AN305	1266
AN315	1240
AN316	1267
AN318	1268
AN326	1250
AN337	1269
AN360	1223
AN362	1248
AN363N	1217
AN366	1242
AN366P	1242
AN374	1224
AN374P	1452
AN377	788
AN610	1442
AN610P	1442
AN612	1249
AN829	1439
AN1201BR	5875
AN1311	922M
AN1319	919D
AN1324	987
AN1339	834
AN1358	928M
AN1393	943M
AN1458	778A
AN1741	941M
AN2065	1057
AN3210K	1805
AN3211K	1805
AN3313	15043
AN3320K	1808
AN3821K	1809
AN3822K	1809
AN4102	1381
AN4558	778A
AN5010	1402
AN5020	1682
AN5070	1688
AN5111	1440
AN5125	15013
AN5125M	1779
AN5132	1551
AN5135K	1810
AN5135NK	1810
AN5136	1861
AN5136K	15046
AN5136K-R	15046
AN5136KR	15046
AN5215	1234
AN5250	1404
AN5255	1663
AN5256	1663
AN5262	1783
AN5265	1789
AN5310	1410
AN5310K	1410
AN5310L	1410
AN5310M	1410
AN5310N	1410
AN5310U	1417
AN5311	1410
AN5311J	1410
AN5311KL	1410
AN5315	1726
AN5318	1747
AN5318A	1747
AN5318N	1747
AN5320	1415
AN5330	1437
AN5340	1401
AN5352	1835
AN5352N	1835
AN5411	1417
AN5416	1683
AN5435	1295
AN5436	1727
AN5436N	1727
AN5440	1403
AN5510	1406
AN5512	1674
AN5515	1684
AN5515X	1684
AN5520	1485
AN5521	1782
AN5700	1615
AN5703	1625
AN5710	1620
AN5712	1618
AN5720	1607
AN5722	1610
AN5730	1234
AN5732	1234
AN5752	1629
AN5753	1629
AN5836	1780
AN6041	1709
AN6070	1688
AN6209	1710
AN6291	1744
AN6300	1412
AN6306	1712
AN6307	1711
AN6310	1621
AN6320	1419
AN6320N	1419
AN6326	1689
AN6326N	1689
AN6328	1713
AN6330	1419
AN6331	1422
AN6332	1422
AN6340	1428
AN6341	1425
AN6342	1427
AN6342N	1427
AN6343	1700
AN6344	1428
AN6345	1568
AN6350	1701
AN6356	1811
AN6356N	1811
AN6359	1812
AN6359N	1812
AN6360	1702
AN6361	1703
AN6361N	1703
AN6362	15010
AN6366	1813
AN6366K	15028
AN6366NK	1813
AN6387	1630
AN6551	1529
AN6552	778A
AN6552F	778A
AN6553	778A
AN6558	778A
AN6561	928S
AN6562	928M
AN6570	941M
AN6572	778A
AN6573	941S
AN6677	1613
AN6821	1499
AN6873	1715
AN6873N	1715
AN6875	1503
AN6876	1502
AN6877	1501
AN6878	1500
AN6912	834
AN6912N	834
AN6913	1718
AN6914	943M
AN7110	1704
AN7112	1465
AN7115	1381
AN7120	1463
AN7130	1363
AN7131	1365
AN7145	1383
AN7145M	1383
AN7146M	1367
AN7151	1371
AN7154	1369
AN7156	1371
AN7156N	1371
AN7158	1373
AN7158N	1373
AN7168	1395
AN7218	1563
AN7310	1659
AN7311	1435
AN7325P	1730
AN7410	1560
AN7805	960
AN7805F	960
AN7806	962
AN7808	964
AN7810	1932
AN7812	966
AN7812F	966
AN7812LB	966
AN7815	968
AN7818	958
AN7818F	958
AN7824	972
AN7905T	961
AN53230	1415
AN-1	116
AN-203	1054
AN-206	1057
AN-210	1054
AN-214	1058
AN-214P	1058
AN-240	712
AN-612	1249
AN-G5B	125
AN-G-5B	116
AND101RG	3016
AND103G	3014
AND104R	3012
AND105G	3015
AND105R	3013
AND113R	3025
AND114G	3024
AND114OR	3023
AND114R	3018
AND114Y	3021
AND121R	3000
AND122G	3003
AND122R	3004
AND123R	3007
AND124G	3010
AND124OR	3009
AND124Y	3011
AND312R	3056
AND313R	3052
AND314R	3065
ANJ101	159
AO1	126
AO7	101
AO4091A	126
AO4092	116
AO4092A	116
AO4092B	116
AO4093	116
AO4093-A	116
AO4093-X	506
AO4093A	116
AO4166-2	145A
AO4210A	116
AO4212-A	116
AO4212-B	116
AO4230-A	506
AO4233	116
AO4234-2	139A
AO4241-A	506
AO4716	116
AO4727	120
AO4735-A	118
AO4901A	116
APB-11A-1001	160
APB-11A-1004	160
APB-11A-1008	102A
APB-11H-1001	160
APB-11H-1004	160
APB-11H-1007	126
APB-11H-1008	102
APB-11H-1010	102A
AQ2	128
AQ2(PHILCO)	116
AQ3	128
AQ3(PHILCO)	116
AQ4	123
AQ5	128
AQ6	123
AR4	104
AR5	104
AR6	104
AR7	104
AR7C	116
AR8	121
AR8P404R	121
AR9	121
AR10	121
AR11	121
AR12	121
AR13	121
AR14	121
AR15	130
AR15-L8-0026	130
AR16	116
AR17	175
AR17(GREY)	152
AR17(PHILCO)	175
AR17A	175
AR17B	175
AR17GREY	152
AR18	175
AR18(PHILCO)	175
AR19	116
AR20	116
AR21	116
AR22	116
AR22(PHILCO)	182
AR22(RECT)	116
AR22(TRANS)	184
AR23	125
AR23(PHILCO)	183
AR23(RECT)	5808
AR23(TRANS)	185
AR24	125
AR24(PHILCO)	186
AR24(RECT)	5808
AR24(RED)	196
AR24(TRANS)	184
AR24RED	196
AR25	187
AR25(G)	153
AR25(GREEN)	153
AR25(ORANGE)	108
AR25(WHITE)	108
AR25G	187
AR26	211
AR27	197
AR27(GREEN)	153
AR27GREEN	153
AR28	196
AR28(RED)	196
AR28RED	196
AR29	211
AR30	196
AR35	196
AR37	197
AR37(GREEN)	153
AR37GREEN	153
AR38	196
AR38(RED)	196
AR38RED	196
AR44	153
AR102	158
AR103	160
AR104	160
AR105	160
AR107	123AP
AR108	123AP
AR111	161
AR200	108
AR200(GREEN)	107
AR200(W)	123AP
AR200W	108
AR200WHITE	123AP
AR201	108
AR201(Y)	123AP
AR201(YELLOW)	108
AR201Y	108
AR201YELLOW	123AP
AR202	108
AR202(GREEN)	108
AR202G	108
AR202GREEN	123AP
AR203	128
AR203(R)	192
AR203(RED)	128
AR203R	128
AR203RED	192
AR204	123AP
AR205	123AP
AR206	123AP
AR207	192
AR208	123AP
AR209	161
AR210	161
AR211	161
AR212	108
AR213	161
AR213(V)	199
AR213(VIOLET)	161
AR213V	161
AR213VIOLET	199
AR218	161
AR218(ORANGE)	161
AR218(RED)	161
AR218(RO)	199
AR218ORANGE	192
AR218RED	192
AR218RO	161
AR219	161
AR219(YY)	161
AR219YY	107
AR220	161
AR220(GY)	161
AR220(YELLOW)	107
AR220GREEN	161
AR220GY	107
AR220YELLOW	161
AR221	108
AR222	161
AR222(BLUE)	107
AR222(BY)	161
AR222(YELLOW)	107
AR222BLUE	161
AR222BY	107
AR222YELLOW	161
AR224	107
AR224(WHITE)	107
AR224(YELLOW)	107
AR224WHITE	161
AR224YELLOW	161
AR303	123AP
AR304	129
AR304(GREEN)	159
AR304(RED)	129
AR304GREEN	193
AR304RED	193
AR306	123AP
AR306(BLUE)	123AP
AR306(ORANGE)	123AP
AR306BLUE	128
AR306ORANGE	128
AR308	193
AR308(VIOLET)	159
AR308VIOLET	129
AR313	108
AR501	222
AR502	222
AR882	116
AR3470ACP	3470
AR-4	121
AR-5	121
AR-6	121
AR-7	121
AR-8	121
AR-9	121
AR-10	121
AR-11	121
AR-12	121
AR-13	121
AR-14	121
AR-15	124
AR-17	152
AR-18	124
AR-22(DIODE)	116
AR-22(TRANS)	152
AR-23(DIODE)	125
AR-23(TRANS)	153
AR-24	125
AR-25	153
AR-29	187
AR-30	196
AR-102	102A
AR-103	102A
AR-104	102A
AR-105	102A
AR-107	123AP
AR-108	123AP
AR-200	123AP
AR-201	123AP
AR-202	123AP
AR-203	192
AS01	552
AS01V0	552
AS01Z	552
AS2	116
AS3	116
AS3A	5800
AS3B	5801
AS3C	5802
AS3D	5804
AS3E	5806
AS3F	5808
AS4	116
AS5	116
AS6	116
AS11	116
AS14	116
AS15	116
AS215	121
AS477	176
AS3428	101
AS33867	102A
AS33868	102A
AS34280	160
AS-2	116
AS-3	116
AS-4	116
AS-5	116
AS-14	116
AS-15	116
ASD25	101
ASL802001-1	912
ASY12-1	158
ASY12-2	158
ASY13-1	158
ASY13-2	158
ASY14	158
ASY14-1	158
ASY14-2	158
ASY14-3	158
ASY24	102A
ASY24B	102A
ASY26	100
ASY26-RT	160
ASY27	100
ASY28	101
ASY28-RT	101
ASY29	101
ASY29-RT	101
ASY30	126
ASY31	102A
ASY32	102A
ASY48	102A
ASY48-IV	102A
ASY48-V	102A
ASY48-VI	102A
ASY49	102A
ASY50	102A
ASY51	102A
ASY52	102A
ASY53	101
ASY54	102A
ASY55	102A
ASY56	102A
ASY56N	100
ASY57	126
ASY57N	100
ASY58	126
ASY58N	100
ASY59	126
ASY61	103A
ASY62	103A
ASY63	160
ASY63N	160
ASY67	160
ASY70	102A
ASY70-IV	102A
ASY70-VI	102A
ASY70IV	158
ASY70V	158
ASY70VI	158
ASY71	158
ASY72	101
ASY73	101
ASY73-RT	103A
ASY74	101
ASY74-RT	103A
ASY75	101
ASY76	100
ASY76-RT	176
ASY77	100
ASY80	100
ASY80-RT	176
ASY81	176
ASY82	102A
ASY84	102A
ASY86	101
ASY87	101
ASY88	101
ASY89	101
ASY90	102A
ASY91	102A
ASY-24	160
ASY-26	100
ASY-27	100
ASY-31	102A
ASY-62	101
ASY-72	101
ASZ10	126
ASZ11	126
ASZ15	121
ASZ16	121
ASZ17	121
ASZ18	121
ASZ20	160
ASZ20N	160
ASZ21	160
ASZ30	126
AT0017	289
AT0025	289
AT0025A	289
AT0045	289
AT4	160
AT5	160
AT6	102A
AT6A	102A
AT7	192
AT10H	102A
AT10M	102A
AT10N	102A
AT11	106
AT12	128
AT13	160
AT14	160
AT15	160
AT16	160
AT17	160
AT20H	102A
AT20M	102A
AT20N	102A
AT30H	102A
AT30M	102A
AT30N	102A
AT50	102A
AT52	101
AT53	101
AT71	101
AT72	101
AT73R	101
AT74	102A
AT74S	102A
AT75R	101
AT76R	101
AT77	101
AT100H	102A
AT100M	102A
AT100N	102A
AT110	127
AT111	127
AT112	127
AT113	127
AT200	127
AT310	107
AT311	107
AT312	107
AT313	107
AT314	107
AT315	107
AT316	107
AT318	107
AT319	107
AT321	107
AT322	107
AT323	107
AT324	107
AT325	107
AT326	107
AT327	107
AT328	107
AT329	123AP
AT330	107
AT331	159
AT331A	159
AT332	159
AT332A	159
AT333	159
AT335	123AP
AT335A	159
AT336	123AP
AT337	123AP
AT338	107
AT339	128
AT340	161
AT341	161
AT342	161
AT343	161
AT344	161
AT345	161
AT346	161
AT347	123AP
AT348	123AP
AT349	123AP
AT350	154
AT351	154
AT353	123A
AT355	161
AT356	161
AT370	123AP
AT380	128
AT381	128
AT382	128
AT383	128
AT384	128
AT385	128
AT386	128
AT387	128
AT388	128
AT390	129
AT391	129
AT392	129
AT393	129
AT394	129
AT395	129
AT396	129
AT397	129
AT398	129
AT400	123AP
AT401	123AP
AT402	123AP
AT403	123AP
AT404	123AP
AT405	123AP
AT406	123AP
AT407	123AP
AT410	159
AT410-1	159
AT412	159
AT412-1	159
AT413	159
AT413-1	159
AT414	159
AT414-1	159
AT415	159
AT415-1	159
AT416	159
AT416-1	159
AT417	159
AT417-1	159
AT418	159
AT418-1	159
AT419	159
AT419-1	159
AT420	123AP
AT421	123AP
AT422	123AP
AT423	123AP
AT424	123AP
AT425	123AP
AT426	123AP
AT427	123AP
AT430	159
AT430-1	159
AT431	159
AT431-1	159
AT432	159
AT432-1	159
AT433	159
AT433-1	159
AT434	159
AT434-1	159
AT435	159
AT435-1	159
AT436	159
AT436-1	159
AT437	159
AT437-1	159
AT438	159
AT438-1	159

PART NUMBER	NTE REPLACEMENT
AT440	128
AT441	128
AT442	128
AT443	128
AT444	128
AT445	128
AT446	128
AT451	159
AT451-1	159
AT452	159
AT452-1	159
AT453	159
AT453-1	159
AT454	159
AT454-1	159
AT455	159
AT455-1	159
AT460	129
AT461	129
AT462	129
AT463	129
AT464	129
AT465	129
AT466	129
AT467	129
AT468	129
AT470	128
AT471	128
AT472	128
AT473	128
AT474	128
AT475	128
AT476	128
AT477	128
AT478	128
AT479	128
AT480	129
AT481	129
AT482	129
AT483	129
AT484	129
AT485	129
AT490	123AP
AT491	123AP
AT492	123AP
AT493	123AP
AT494	123AP
AT495	123AP
AT520	108
AT521	101
AT551	101
AT874	102A
AT1138	179
AT1138A	179
AT1138B	179
AT1138BR	179
AT1833	179
AT1834	179
AT1856	130
AT2848	129
AT3260	130
AT5156	129
AT-1	160
AT-2	160
AT-3	160
AT-4	160
AT-5	100
AT-6	160
AT-6A	102A
AT-7	128
AT-8	160
AT-9	160
AT-10	130
AT-11	159
AT-12	128
AT-14	160
AT-15	100
AT-50	102A
AT-1856	130
AT/AF1	102
AT/AF2	102
AT/RF1	160
AT/RF2	160
AT/S13	160
ATAF1	102A
ATAF2	102A
ATC-SR-3	156
ATC-TR-4	128
ATC-TR-5	121
ATC-TR-6	121
ATC-TR-7	128
ATC-TR-13	128
ATC-TR-14	121
ATC-TR-15	130
ATC-TR-19	152
ATGP	102A
ATRF1	126
ATRF2	126
ATS13	126
AU01	552
AU01-20	5135A
AU01-24	5137A
AU01-33	5142A
AU01Z	552
AU02	552
AU02V0	552
AU02Z	552
AU100N	158
AU101	127
AU102	121
AU103	127
AU104	127
AU105	127
AU106	127
AU107	127
AU108	127
AU110	127
AU111	127
AU112	127
AU113	127
AU206	127
AU210	127
AU213	127
AU2012	142A
AUY10	121
AUY19	121
AUY20	121
AUY21	104
AUY21A	121
AUY22	104
AUY22A	121
AUY28	127
AUY29	179
AUY30	121
AUY31	121
AUY32	121
AUY33	121
AUY34	127
AUY37	179
AUY38	127
AUY-21	121
AV0000105-0	177
AV01-07	141A
AV03-04	5194A
AV03-08	5183A
AV03-10	5186A
AV03-12	5188A
AV03-15	5191A
AV03-18	5194A
AV03-22	5197A
AV03-27	5200A
AV5	142A
AV10	147A
AV104	5186A
AV105	121
AV105(ZENER)	5188A
AV107(ZENER)	5194A
AV110	5203A
AV116	5220A
AV2012	142A
AV2015	145A
AV2027	146A
AV2027A	146A
AV2033	147A
AV2055	148A
AV2062	149A
AV2082	150A
AV2110	151A
AV8015	5191A
AV8018	5194A
AV8022	5197A
AV8027	5200A
AV8056	5212A
AV8082	5217A
AV-2015	145A
AW0L-13	143A
AW01	142A
AW01(RCA)	143A
AW01-06	137A
AW01-07	5071A
AW01-08	5072A
AW01-08J	5072A
AW01-09	139A
AW01-7	5071A
AW01-9	139A
AW01-9/CP3112030	139A
AW01-10	140A
AW01-11	5074A
AW01-12	142A
AW01-12C	142A
AW01-12V	142A
AW01-13	5022A
AW01-15	145A
AW01-16	5075A
AW01-18	5077A
AW01-20	5079A
AW01-22	5080A
AW01-24	5081A
AW01-27	146A
AW01-30	5084A
AW01-33	147A
AW03-03	5065A
AW03-04	5067A
AW03-05	5069A
AW08-13	143A
AW09	139A
AW0113	142A
AW0122	5080A
AW-01-07	139A
AW-01-08	5072A
AW-01-09	139A
AW-01-10	140A
AW-01-12	116
AW-01-12C	142A
AW-01-22	5080A
AW-01-33	147A
AW-08-13	143A
AWH-24	123AP
AWOL-13	5022A
AX12	142A
AX91770	108
AX-7	138A
AXX3038	2114
AXX3044	2104
AXX3051	6809E
AXX3055	2117
AYY10-120	5852
AZ3.3	5005A
AZ3.6	134A
AZ3.9	5007A
AZ4.3	5008A
AZ4.7	135A
AZ5.1	135A
AZ5.6	136A
AZ6.2	137A
AZ6.8	5014A
AZ7	144A
AZ7.5	5015A
AZ8.2	5016A
AZ9.1	139A
AZ10	140A
AZ11	5020A
AZ12	5021A
AZ13	5022A
AZ15	145A
AZ18	5027A
AZ22	5030A
AZ27	146A
AZ27A	146A
AZ97B	5039A
AZ110	5074A
AZ746	5005A
AZ746A	5005A
AZ747	5006A
AZ747A	5006A
AZ748	5007A
AZ748A	5007A
AZ749	5008A
AZ749A	5008A
AZ750	5009A
AZ750A	5009A
AZ751	5010A
AZ751A	5010A
AZ752	5011A
AZ752A	5011A
AZ753	5013A
AZ753A	5013A
AZ754	5014A
AZ754A	5014A
AZ755	5015A
AZ755A	5015A
AZ756	5016A
AZ756A	5016A
AZ757	5018A
AZ757A	5018A
AZ758	5019A
AZ758A	5019A
AZ759	5021A
AZ759A	5021A
AZ957	5014A
AZ957A	5014A
AZ957B	5014A
AZ958	5015A
AZ958A	5015A
AZ958B	5015A
AZ959	5016A
AZ959A	5016A
AZ959B	5016A
AZ960	5018A
AZ960A	5018A
AZ960B	5018A
AZ961	5019A
AZ961A	5019A
AZ961B	5019A
AZ962	5020A
AZ962A	5020A
AZ962B	5020A
AZ963	5021A
AZ963A	5021A
AZ963B	5021A
AZ964	5022A
AZ964A	5022A
AZ964B	5022A
AZ965	5024A
AZ965A	5024A
AZ965B	5024A
AZ966	5025A
AZ966A	5025A
AZ966B	5025A
AZ967	5027A
AZ967A	5027A
AZ967B	5027A
AZ968	5029A
AZ968A	5029A
AZ968B	5029A
AZ969	5030A
AZ969A	5030A
AZ969B	5030A
AZ970	5031A
AZ970A	5031A
AZ970B	5031A
AZ971	5033A
AZ971A	5033A
AZ971B	5033A
AZ972	5035A
AZ972A	5035A
AZ972B	5035A
AZ973	5036A
AZ973A	5036A
AZ973B	5036A
AZ974	5037A
AZ974A	5037A
AZ974B	5037A
AZ975	5038A
AZ975A	5038A
AZ975B	5038A
AZ976	5039A
AZ976A	5039A
AZ976B	5087A
AZ-050	135A
AZ-090	139A
AZ-052	136A
AZ-054	136A
AZ-056	136A
AZ-058	5070A
AZ-061	137A
AZ-063	137A
AZ-065	5071A
AZ-067	5071A
AZ-069	5071A
AZ-071	138A
AZ-073	138A
AZ-075	138A
AZ-077	5072A
AZ-079	5072A
AZ-081	5072A
AZ-083	5072A
AZ-085	5073A
AZ-088	5073A
AZ-092	139A
AZ-094	140A
AZ-096	140A
AZ-098	140A
AZ-15	145A
AZ-100	140A
AZ-105	5074A
AZ-110	5074A
AZ-115	141A
AZ-120	142A
AZ-125	143A
AZ-130	143A
AZ-135	144A
AZ-140	144A
AZ-145	145A
AZ-150	145A
AZ-157	5075A
AZ-162	5075A
AZ-167	5076A
AZ-172	5076A
AZ-177	5077A
AZ-182	5077A
AZ-187	5078A
AZ-192	5078A
AZ-197	5079A
AZG	107
AZY	107
B0350000	778A
B0306000	1004
B0306004	1004
B00	7442
B004B	166
B004C	167
B004E	168
B010Z	116
B040130	4013B
B0305401	1235
B090	139A
B0102	116
B0102V	116
B0311000	1087
B0301-049	181
B0350500	778A
B0350602	778A
B0470116	4011B
B0470130	4013B
B0470494	4049
B0470522	4052B
B0470532	4053B
B0470662	4066B
B0470932	4093B
B0075660	7473
B01	7475
B01-02	116
B02	7476
B03	74H76
B071	138A
B094	140A
B0272490	1677
B0311400	1128
B0311402	1128
B0311405	1128
B0313800	1130
B0315500	1200
B0316403	712
B0316451	712
B0319200	1155
B0325350	1657
B0325355	1657
B0347500	928M
B0354710	1545
B0354901	1496
B0356385	1842
B0356446	1547
B0356448	1547
B0356602	15003
B0356690	1651
B0356711	1236
B0358272	15035
B0372540	960
B0373230	966
B0383100	7010
B0474370	40174B
B1-8.2	5072A
B1A	182
B1A1	116
B1A5	116
B1A9	116
B1B	116
B1B1	116
B1B5	116
B1B9	116
B1C	184
B1C1	116
B1C5	116
B1C9	116
B1C-1	184
B1C-2	184
B1D	152
B1D1	116
B1D5	116
B1D9	116
B1D-1	184
B1E	191
B1E1	116
B1E1(QUASAR)	191
B1E5	116
B1E9	116
B1E(QUASAR)	191
B1E-1	191
B1F	184
B1F1	116
B1F5	116
B1F9	116
B1G	191
B1G1	116
B1G5	116
B1G9	116
B1H	161
B1H1	125
B1H5	125
B1H9	125
B1H(DIODE)	116
B1H(TRANS)	161
B1J	159
B1K	123AP
B1K1	125
B1K5	125
B1K9	125
B1M	188
B1M1	125
B1M5	125
B1M9	125
B1N	123AP
B1N-1	159
B1N-2	159
B1P	163A
B1P9	116
B1P7201	123AP
B1P-1	163A
B1T	283
B1U	241
B1U148	184
B1W	123AP
B1Z	175
B2	108
B2A	159
B2A1	116
B2A5	116
B2A9	116
B2B	175
B2B1	116
B2B5	116
B2B9	116
B2C1	116
B2C5	116
B2C9	116
B2D	123AP
B2D1	116
B2D5	116
B2D9	116
B2E	159
B2E1	116
B2E5	116
B2E9	116
B2F1	116
B2F5	116
B2F9	116
B2G	159
B2G1	116
B2G5	116
B2G9	116
B2H	162
B2H1	125
B2H5	125
B2H9	125
B2J	184
B2K1	125
B2K5	125
B2K9	125
B2L	283
B2M	188
B2M1	125
B2M5	125
B2M9	125
B2M-1	159
B2M-2	159
B2M-3	159
B2S	159
B2SB241	104
B2SB244	104
B2V	184
B2W	121
B2Y	159
B2Z	123AP
B3	108
B3-12	320
B3A1	116
B3A5	116
B3A9	116
B3B1	116
B3B5	116
B3B9	116
B3C1	116
B3C5	116
B3C9	116
B3D1	116
B3D5	116
B3D9	116
B3E1	116
B3E5	116
B3E9	116
B3F1	116
B3F5	116
B3F9	116
B3G1	116
B3G5	116
B3G9	116
B3H1	125
B3H5	125
B3H9	125
B3K1	125
B3K5	125
B3K9	125
B3M1	125
B3M5	125
B3M9	125
B3N1	506
B3N5	506
B3N9	506
B4	108
B4A1	116
B4A5	116
B4A9	116
B4A-1-A-21	121
B4B1	116
B4B5	116
B4B9	116
B4C1	116
B4C5	116
B4C9	116
B4D1	116
B4D5	116
B4D9	116
B4E1	116
B4E5	116
B4E9	116
B4F1	116
B4F5	116
B4F9	116
B4G1	116
B4G5	116
B4G9	116
B4H1	125
B4H5	125
B4H9	125
B4K1	125
B4K5	125
B4K9	125
B4M1	125
B4M5	125
B4M9	125
B5	102A
B5-31S	5400
B5A	102A
B5A1	116
B5A5	116
B5A9	116
B5A(MOTOROLA)	165
B5B1	116
B5B5	116
B5B9	116
B5C	175
B5C1	116
B5C5	116
B5C9	116
B5D	154
B5D1	116
B5D5	116
B5D9	116
B5E	152
B5E1	116
B5E5	116
B5E9	116
B5F1	116
B5F5	116
B5F9	116
B5G1	116
B5G5	116
B5G9	116
B5H1	125
B5H5	125
B5H9	125
B5K1	125
B5K5	125
B5K9	125
B5M1	125
B5M5	125
B5M9	125
B6A1	156
B6A5	156
B6A9	156
B6B1	156
B6B5	156
B6B9	156
B6B-3-A-21	121MP
B6B-3A21	121MP
B6C1	156
B6C5	156
B6C9	156
B6D1	156
B6D5	156
B6D9	156
B6E1	156
B6E5	156
B6E9	156
B6F1	156
B6F5	156
B6F9	156
B6G1	156
B6G5	156
B6G9	156
B6H1	156
B6H5	156
B6H9	156
B6K1	156
B6K5	156
B6K9	156
B6M1	156
B6M5	156
B6M9	156
B6N1	506
B6N5	506
B6N9	506
B6P	123AP
B7A1	156
B7A5	156
B7A9	156
B7B1	156
B7B5	156
B7B9	156
B7C1	156
B7C5	156
B7C9	156
B7D1	156
B7D5	156
B7D9	156
B7E1	156
B7E5	156
B7E9	156
B7F1	156
B7F5	156
B7F9	156
B7G1	156
B7G5	156
B7G9	156
B7H1	156
B7H5	156
B7H9	156
B7K1	156
B7K5	156
B7K9	156
B7M1	156
B7M5	156
B7M9	156
B7N1	506
B7N5	506
B7N9	506
B8P-2-A-21	102A
B8P-2A21	102A
B9L-4-A-21	102A
B9L-4A21	102A
B9TUI	312
B12	116
B12(DIODE)	116
B12(RECT)	116
B12-01	116
B12-02	116
B12-02R	116
B12-02RK	116
B12-1-A-21	123AP
B12-1A21	123AP
B12-12	325
B14A-1-21	121
B15-12	325
B16A	105
B17	5015A
B17A	105
B18A	105
B19	104
B20	104
B20-001	121
B21	104
B22	102A
B22-3	102A
B22-4	102A
B22A	102A
B22B	102A
B22I	102A
B22R	102A
B22Y	102A
B23	102A
B23-1	102A
B23-2	102A
B23-79	197
B23-82	196
B24	102A
B24-06B	125
B24-06C	125
B24-1	102A
B25	121
B25B	121
B26	102A
B26(JAPAN)	104
B26A	104
B27	104
B28	109
B28(JAPAN)	104
B29	104
B30	109
B30(JAPAN)	104
B30B250KP	168
B30C50KP	167
B30C250	116
B30C250-1	116
B30C250KP	167
B30C350-1	116
B30C500	116
B30C600	116
B30C600CB	116
B30C1000	166
B31	116
B31(RECT)	116
B31(TRANS)	104
B32	102A
B32-0	102A
B32-1	102A
B32-2	102A
B32-4	102A

PART NUMBER	NTE REPLACEMENT
B32N	102A
B33	102A
B33-4	102A
B33C	102A
B33D	102A
B33E	102A
B33F	102A
B34	102
B34N	102
B35C600	116
B37	102A
B37A	102A
B37B	102A
B37C	102A
B37E	102A
B37F	102A
B38	102
B39	102A
B40	102A
B40C1500	166
B41	104
B41-04	552
B42	104
B42-04	552
B43	102A
B43-04	552
B43A	102A
B44	102A
B46	102A
B46-110	113A
B47	102A
B48	102
B49	102A
B50	102
B51	160
B51(JAPAN)	102
B52	102
B53	102
B54	102A
B54B	102A
B54E	102A
B54F	158
B54Y	102A
B55(TRANS)	102A
B56	102A
B56-15	5802
B56-33	5801
B56A	102A
B56B	102A
B56C	102A
B57	102A
B58	158
B59	102A
B60	102A
B60A	102A
B60C300	116
B61	102A
B62	104
B63	131
B64	121
B65	102A
B65-1-A-21	160
B65-1A21	160
B65-2-A-21	103A
B65-2A21	103A
B65-4-A-21	101
B65-4A21	101
B65A-1-21	160
B65B-1-21	160
B65C-1-21	121
B66	102A
B66-1-A-21	102A
B66-1A21	102A
B66-2-A-21	102A
B66-2A21	102A
B66-3-A-21	102A
B66-3A21	102A
B66H	102A
B66X0040-001	142A
B66X0040-002	5079A
B66X0040-003	139A
B66X0040-004	5141A
B66X0040-005	140A
B66X0040-006	130
B66X0040-007	5081A
B66X0040-008	5100A
B66X0033-00	116
B66X0035-001	118
B66X0041-001	120
B67	102A
B67A	102A
B69	121
B71	102
B72	102
B73	102A
B73A	102A
B73B	102A
B73C	102A
B73GR	102A
B74	160
B74-3-A-21	100
B74-3A21	100
B75	102A
B75A	100
B75AH	102A
B75B	102A
B75C	102A
B75F	102A
B75H	102A
B75LB	102A
B76	102A
B77	102A
B77(B)	158
B77(ORGAN)	519
B77A	102A
B77A-1-21	105
B77AA	102A
B77AB	102A
B77AC	102A
B77AD	102A
B77AH	102A
B77AP	102A
B77B	102A
B77B-1-21	121
B77B-11	102A
B77C	158
B77C-1-21	121MP
B77D	102A
B77D0016-1	5675
B77H	102A
B77V	102A
B77VRED	102A
B78	102A
B79	102A
B80	121
B80C1500	166
B81	121
B82	121
B82-004	6085
B83	104
B83-7	5697
B84	121
B84A-1-21	121
B85	102
B87	102
B87J0007	128
B88B-1-21	160
B88C-1-21	100
B89	102A
B89A	102A
B89AH	102A
B89H	102A
B90	102A
B91	102A
B92	102
B92-1-A-21	101
B92-1A21	105
B92-UA21	105
B94	102A
B95	102
B97	102A
B98	102
B100	102
B100(ZENER)	140A
B101	102
B102	102
B103	100
B104	100
B105	158
B106	158
B107	121
B107A	121
B108	158
B108A	158
B108B	158
B109	158
B110	102A
B111	102A
B111K	102A
B112	102A
B113	102A
B114	102A
B115	102A
B116	102A
B117	102A
B117K	102A
B119	121
B119A	121
B120	102A
B122	121
B123	104
B123A	104
B124	121
B125C1500	167
B126	121
B126A	121
B126F	121
B126V	121
B127	121
B127A	121
B128	121
B128A	121
B128V	121
B129	121
B130	131
B130A	131
B131	152
B131(JAPAN)	121
B131A	121
B132	153
B132(JAPAN)	121
B132A	121
B134	121
B134(JAPAN)	102A
B134-D	102A
B134-E	102A
B134A	121
B134C	121
B135	102A
B135B	102A
B135C	102A
B135E	102A
B136	102A
B136-2	102A
B136-3	102A
B136A	102A
B136B	102A
B136C	102A
B136U	102A
B137	121
B138	121
B140	104
B141	104
B142	104
B142B	104
B142C	104
B143	104
B143P	104
B144	104
B144P	104
B145	104
B146	104
B147	104
B149	104
B151(TRANS)	104
B152(TRANS)	104
B153	102
B154	102
B155	102A
B155A	102A
B155B	102A
B156	102A
B156A	102A
B156AA	102A
B156AB	102A
B156AC	102A
B156B	102A
B156C	102A
B156D	102A
B156P	102A
B157	102A
B158	102A
B159	102A
B160	102A
B161	102
B162	102
B163	102
B164	102
B165	102
B166	102
B167	158
B168	102A
B169	123AP
B169(JAPAN)	123AP
B170	102A
B171	158
B171(JAPAN)	102A
B171A	158
B171B	158
B172	158
B172-5	156
B172-10	156
B172-20	156
B172-30	156
B172-40	156
B172-50	156
B172-60	156
B172-70	156
B172-80	156
B172-90	156
B172-100	156
B172A	158
B172AF	158
B172B	158
B172C	158
B172D	158
B172E	158
B172F	158
B172H	158
B172P	158
B172R	158
B173	102A
B173A	102A
B173B	102A
B173C	102A
B173L	102A
B174	102A
B175	158
B175A	158
B175B	158
B175C	158
B175E	158
B176	102A
B176-0	102A
B176-P	102A
B176-PR	102A
B176B	102A
B176M	102A
B176P	102A
B176PRC	102A
B176R	102A
B177	121
B177(JAPAN)	102A
B178	121
B178(JAPAN)	102A
B178-0	102A
B178-S	102A
B178A	102A
B178C	102A
B178D	102A
B178M	102A
B178N	102A
B178T	102A
B178U	102A
B178V	102A
B178X	102A
B178Y	102A
B179	121
B180	158
B180A	158
B181	158
B181A	158
B183	102A
B184	102A
B185	102A
B185(0)	102A
B185(0)	102A
B185AA	102A
B185F	102A
B185P	102A
B186	158
B186(0)	102A
B186(SANYO)	158
B186-1	102A
B186-K	102A
B186A	102A
B186AG	102A
B186B	102A
B186BY	102A
B186G	102A
B186H	102A
B186L	102A
B186Y	102A
B187	158
B187(1)	102A
B187(SANYO)	158
B187AA	102A
B187B	102A
B187C	102A
B187D	102A
B187G	102A
B187K	102A
B187R	102A
B187RED	102A
B187S	102A
B187Y	102A
B187YEL	102A
B188	102A
B191-5	5940
B196	5635
B199	102
B200	102
B200A	102
B200C40	116
B201	102A
B202	102
B203AA	102
B204	179
B205	179
B206	179
B215	121
B216	121
B216A	121
B217	121
B217A	121
B217G	121
B217U	121
B218	102
B219	102
B220	102
B220A	102
B221	102
B221A	102
B222	102
B223	102
B223-10	156
B223-20	156
B223-30	156
B223-40	156
B223-50	156
B223-60	156
B224	121
B224(JAPAN)	102
B225	102
B226	102
B227	102
B228	104
B229	121
B230	104
B231	127
B232	127
B233	104
B234	127
B234N	127
B235	105
B235A	105
B236	105
B237	105
B237-12A	105
B237-12B	105
B238	158
B238-12A	158
B238-12B	158
B238-12C	158
B239	121
B239A	121
B240	160
B240(ZENER)	5081A
B240A	160
B241	102
B243A	127
B246	104
B247	121
B248	121
B248A	121
B249	104
B249A	104
B250	104
B250A	104
B250C7K4S	116
B250C75	116
B250C75K4	116
B250C75K5	116
B250C75K41	116
B250C75K45	116
B250C100	116
B250C100TD	116
B250C125	116
B250C125K4	116
B250C125N2	116
B250C125X4	116
B250C150	116
B250C150K4	116
B250C1500	168
B251	127
B251A	127
B252	127
B252A	127
B253	127
B253A	127
B254	104
B255	104
B256	104
B257	102
B258	105
B259	105
B260	105
B261	102A
B262	102A
B263	102A
B264	102A
B265	102A
B266	102A
B266A-1	159
B266B-1	159
B266P	102A
B266Q	102A
B267	102A
B268	102A
B269	102A
B269-3345	519
B270	102A
B270A	102A
B270B	102A
B270C	102A
B270D	102A
B270E	102A
B271	102A
B272	102A
B273	102A
B274(JAPAN)	127
B274(SYLVANIA)	128
B275	127
B276	127
B282	121
B283	121
B284	121
B285	121
B290	100
B291	100
B292	100
B292A	100
B293	102A
B294	116
B294(RECT)	116
B294(TRANS)	102A
B295	121
B296	127
B299	102A
B300	127
B301	127
B302	102A
B303(TRANS)	102A
B303-0	102A
B303A	102A
B303B	102A
B303C	102A
B303H	102A
B303K	102A
B304	158
B304A	158
B309	127
B310	127
B310(ZENER)	5085A
B311	127
B312	127
B313	127
B314	100
B315	102A
B316	102A
B317	102A
B318	127
B319	127
B320	127
B321	102A
B322	102A
B323	102A
B324	158
B324A	158
B324B	158
B324D	158
B324E	158
B324E-1	158
B324F	158
B324G	158
B324H	158
B324I	158
B324J	158
B324K	158
B324L	158
B324N	158
B324P	158
B324S	158
B324V	158
B326	102
B327	102
B328	102
B329	102A
B329K	102A
B331	213
B331H	213
B331HA	213
B331HB	213
B331HC	213
B332	213
B332H	213
B332HA	213
B332HB	213
B332HC	213
B333	213
B335	102
B336	102A
B337	121
B337A	121
B337B	121
B337BK	121
B337H	121
B337HA	121
B337HB	121
B338	121
B338H	121
B338HA	121
B338HB	121
B339	179
B339H	179
B340	179
B340H	179
B341	127
B341H	127
B341V	127
B342	127
B343	127
B345	102A
B346	102A
B346K	102A
B346Q	102A
B347	102
B348	102A
B348Q	102A
B348R	102A
B349	102A
B350	102
B351	105
B352	294
B352D	294
B353	105
B354	105
B355	104
B356	104
B357	127
B358	127
B359	127
B360	127
B361	127
B362	127
B364	102A
B365	158
B365B	158
B366	102A
B367	131
B367(A)	131
B367A	131
B367B	131
B367C	131
B367H	131
B368	131
B368A	131
B368B	131
B368H	131
B370	102A
B370A	102A
B370AA	102A
B370AB	102A
B370AC	102A
B370AHA	102A
B370AHB	102A
B370B	102A
B370C	102A
B370D	102A
B370P	102A
B370PB	102A
B370V	102A
B371	102A
B371D	102A
B372	158
B373	158
B375	127
B375-2B	127
B375-5B	127
B375A	127
B375A-2B	127
B375A-5B	127
B375A-NB	127
B375TV	127
B376	102A
B376G	102A
B377	102A
B377B	102A
B378	102A
B378A	102
B379	102
B379-2	102
B379A	102
B379B	102
B380	102
B380A	102
B381	102A
B382	102A
B383	102A
B383-1	102A
B383-2	102A
B384	126
B385	126
B386	102A
B387	100
B389	102A
B390	127
B391	121
B392	100
B393	100
B393-5	5309
B393-10	5309
B393-20	5309
B393-30	5310
B393-40	5310
B393-50	5310
B393-60	5310
B393-70	5311
B393-80	5311
B393-90	5311
B393-100	5311
B394	100
B395	100
B396	100
B400	102A
B400A	102A
B400B	102A
B400K	102A
B401	100
B402	100
B403	100
B405	158
B405-2C	158
B405-3C	158
B405-4C	158
B405A	158
B405B	158
B405C	158
B405D	158
B405E	158
B405G	158
B405H	158
B405K	158
B405R	158
B405RE	158
B407	121
B407-0	121
B407-0	121
B407TV	121
B408	100
B410	127
B411	127
B412-15-5	503
B412-20-5	504
B413	104
B414	104
B415	158
B415A	158
B415B	158
B416	100
B417	100
B421	102A
B422	102
B423	102
B424	121
B425	127
B425Y	127
B426	121
B426BL	121
B426R	121
B426Y	121
B427	102A
B428	102A
B430	105
B430-5	5309
B430-10	5309
B430-20	5309
B430-30	5310
B430-40	5310
B430-50	5310
B430-60	5310
B430-70	5311
B430-80	5311
B430-90	5311
B430-100	5311
B431	158
B432	127
B433	105
B434	153
B434-0	153
B434-0	153
B434-R	153
B434-Y	153
B435	153
B435-0	153
B435-0	153
B435-R	153
B435-Y	153
B439	102A
B439A	102A
B440	102A
B443	102A
B443A	102A
B443B	102A
B444	126
B444A	126
B444B	126
B445	121
B446	121
B447	127
B448	131
B449	121
B449F	121
B449P	121
B450	158
B450A	158
B451	158
B452	158

PART NUMBER	NTE REPLACEMENT
B452A	158
B453	158
B454	158
B455	158
B457	158
B457-C	158
B457A	158
B458	131
B458A	131
B459	102A
B459-0	158
B459-0	102A
B459A	102A
B459B	102A
B459C	102A
B459D	102A
B460	102A
B460A	158
B460B	102A
B461	176
B462	131
B463	131
B463BL	131
B463E	131
B463R	131
B463Y	131
B464	127
B465	127
B466	131
B467	131
B468	127
B468A	127
B468B	127
B468C	127
B468D	127
B470	102
B471	121
B471-2	121
B471A	121
B471B	121
B472	121
B472A	121
B472B	121
B473	131
B473D	131
B473F	131
B473H	131
B474	226
B474-2	226
B474-3	226
B474-4	226
B474-6D	226
B474MP	226
B474S	226
B474V4	226
B474V10	226
B474Y	226
B475	158
B475A	158
B475B	158
B475D	158
B475E	158
B475F	158
B475G	158
B475P	158
B475Q	158
B476	158
B481	131
B481D	131
B481E	131
B482	102A
B483	179
B484	179
B485	179
B486	102
B492	176
B492B	176
B494	158
B495	158
B495A	158
B495C	158
B495D	158
B495T	158
B496	102A
B497	102
B498	102A
B500C1500	169
B502	197
B503	197
B506	281
B506A	281
B506C	281
B506D	281
B507	153
B507E	153
B508	153
B509	153
B510	129
B510S	129
B511	153
B511C	153
B511D	153
B512	153
B512-0	153
B512A	153
B513	153
B513A	153
B514	153
B515	153
B516C	102A
B516CD	102A
B516D	102A
B516P	102A
B522-893	113A
B525D	298
B525E	298
B527-062	113A
B528E	292
B532	285
B532P	285
B532Q	285
B532R	285
B532S	285
B534	102A
B534A	102A
B535	158
B536	292
B536A	292
B537	292
B537L	292
B537LM	153
B539	285
B539R	123AP
B541	281
B544	294
B544D	294
B544E	294
B544F	294
B544P1	294
B544P1D	294
B544P1E	294
B544P1F	294
B546	292
B546A	398
B546EX	292
B546I	292
B546K	292
B550	197
B554	285
B554-0	285
B554-R	285
B555	281
B555-0	281
B555-O	281
B560	298
B560D	298
B560E	298
B560F	298
B561	159
B561B	159
B561C	159
B562	288
B562B	288
B562C	288
B565	6060
B565(EDAL)	6060
B568	292
B596Y	197
B600	88
B601-1006	160
B601-1007	160
B601-1008	160
B601-1009	102A
B601-1010	158
B601-1011	109
B601-1012	116
B601K	262
B605	294
B605K	294
B614 007 0	177
B614-007-0	177
B621A	294
B621S	294
B630	398
B632K	185
B641-Q	19
B641-R	19
B641P	290A
B642-0	19
B642-Q	19
B642-R	19
B642-S	19
B643-Q	19
B643-R	19
B644-R	19
B644Q	290A
B644S	290A
B648AB	374
B648AC	374
B664S	290A
B688	37
B692	37
B692X13	109
B699	93
B699B	93
B699C	93
B707K	197
B755(TRANS)	37
B761P	242
B761Q	242
B761R	242
B765K	262
B776	37
B788Q	91
B788R	91
B788S	91
B788T	91
B788U	91
B794L	254
B795	254
B795L	254
B816(TRANS)	37
B823(TRANS)	55
B824R	378
B825	197
B827	2314
B827(TRANS)	37
B827Q	2314
B827R	2314
B827S	2314
B828	2314
B828Q	2314
B828R	2314
B828S	2314
B829	2314
B829Q	2314
B829R	2314
B829S	2314
B834	153
B834-0	197
B834-0	153
B837	5697
B849(TRANS)	37
B855(TRANS)	55
B856(TRANS)	55
B857(TRANS)	55
B858	55
B858(TRANS)	55
B859(TRANS)	55
B860(TRANS)	55
B863(TRANS)	37
B882	264
B882(JAPAN)	264
B883	271
B884	262
B885(JAPAN)	262
B886	264
B940P	398
B941Q	55
B949	262
B1002	519
B1017	121
B1022	102
B1022-1	102A
B1058	102
B1058-1	102A
B1085	121
B1110	121
B1135R	153
B1151	185
B1151A	121
B1151B	121
B1152	121
B1152A	121
B1152B	121
B1154	102
B1154-1	102A
B1178	127
B1201	116
B1202	116
B1202V	116
B1203	116
B1204	125
B1210	54
B1215	104
B1242-60	6076
B1242-120	6078
B1242-120R	6079
B1246-40	6154
B1246-60	6156
B1246-100	6158
B1246-100R	6159
B1248-20	5986
B1248-40	6002
B1274	121
B1274A	121
B1274B	121
B1274R	153
B1368	121
B1368A	121
B1368B	121
B1368C	121
B1368D	121
B1368E	121
B1368F	121
B1904	121
B1914	121
B2090	139A
B2404C	552
B2404D	552
B2406C	552
B2406D	552
B2620	506
B2708	2708
B2716	2716
B2804-D	552
B2804D	552
B3015M	558
B3030	102A
B3465	195A
B3466	196
B3468	195A
B3531	186
B3533	186
B3537	186
B3538	186
B3539	196
B3540	186
B3541	186
B3542	186
B3543	196
B3544	196
B3547	152
B3548	152
B3550	152
B3551	152
B3570	186
B3576	186
B3577	152
B3578	152
B3580	152
B3584	152
B3585	152
B3586	152
B3588	152
B3589	152
B3606	186
B3607	186
B3608	186
B3609	186
B3610	186
B3611	186
B3612	186
B3613	186
B3614	186
B3746	128
B3747	186
B3748	186
B3750	186
B4004B	102A
B4302	552
B4304	552
B4304(RECT)	552
B4304V	552
B4402	552
B4404	552
B4406	552
B5000	152
B5001	186
B5002	152
B5020	130
B5021	152
B5022	152
B5031	152
B5032	152
B5277B	116
B8589JAPAN)	55
B9426	108
B10064	104
B10069	104
B10142	127
B10142A	127
B10142B	127
B10143	127
B10143A	127
B10143B	127
B10162	121
B10163	121
B10474	121
B10475	121
B10912	121
B10913	121
B13517-2	912
B17307	130
B35016	5636
B36564	116
B81004	5800
B102000	127
B102001	127
B102002	127
B102003	127
B103000	127
B103001	127
B103002	127
B103003	127
B103004	127
B113000	179
B133001	182
B133002	182
B133003	182
B133004	182
B133005	182
B133006	182
B133007	182
B133550	130
B133577	130
B133578	123AP
B133684	130
B133685	130
B133823	175
B143000	186
B143001	186
B143003	186
B143004	152
B143009	186
B143010	186
B143011	152
B143012	152
B143015	186
B143016	186
B143018	152
B143019	152
B143024	186
B143025	186
B143026	152
B143027	152
B170000	130
B170000-B	165
B170000-BLK	328
B170000-BRN	328
B170000-ORG	130
B170000-ORN	130
B170000-RED	130
B170000-Y	130
B170000-YEL	181
B170000BLK	130
B170000BRN	130
B170001	130
B170001-B	130
B170001-BLK	130
B170001-BRN	130
B170001-O	130
B170001-ORG	130
B170001-R	130
B170001-RED	130
B170001-Y	130
B170001-YEL	181
B170001BLK	130
B170001BRN	130
B170002	130
B170002-BLK	130
B170002-BRN	130
B170002-O	130
B170002-ORG	130
B170002-R	130
B170002-RED	130
B170002-Y	130
B170002-YEL	181
B170003	130
B170003-B	165
B170003-BLK	181
B170003-BRN	181
B170003-O	130
B170003-ORG	181
B170003-R	130
B170003-RED	181
B170003-Y	130
B170003-YEL	181
B170004	130
B170004-B	130
B170004-BLK	181
B170004-BRN	181
B170004-O	181
B170004-ORG	181
B170004-R	130
B170004-RED	181
B170004-Y	130
B170004-YEL	181
B170005	130
B170005-B	130
B170005-BLK	181
B170005-BRN	181
B170005-O	130
B170005-ORG	181
B170005-R	130
B170005-RED	181
B170005-Y	130
B170005-YEL	181
B170006	130
B170006-B	165
B170006-BLK	181
B170006-BRN	181
B170006-O	162
B170006-ORG	181
B170006-R	162
B170006-RED	181
B170006-Y	162
B170006-YEL	181
B170007	130
B170007-B	181
B170007-BLK	181
B170007-BRN	181
B170007-O	162
B170007-ORG	181
B170007-R	162
B170007-RED	181
B170007-Y	162
B170007-YEL	181
B170008	162
B170008-BLK	181
B170008-BRN	181
B170008-ORG	181
B170008-RED	181
B170008-YEL	181
B170009	130
B170010	130
B170011	130
B170012	130
B170013	130
B170014	130
B170015	130
B170016	130
B170017	181
B170018	130
B170019	130
B170020	130
B170021	130
B170022	130
B170023	181
B170024	130
B170025	130
B170026	181
B176000	163A
B176001	162
B176002	162
B176003	162
B176004	163A
B176005	163A
B176006	163A
B176007	163A
B176009	163A
B176010	163A
B176011	163A
B176013	163A
B176014	163A
B176015	163A
B176024	163A
B176025	163A
B176026	163A
B176027	163A
B176028	163A
B176029	163A
B177000	181
B232008	124
B678760A	198
B 722246-2	123AP
B1760000	283
B5493957-4	129
B5493957-5	129
B5493957-6	129
B7579500	125
B7978850	506
B8780010	123
B-3P	109
B-5	176
B-22-3	102A
B-22-4	102A
B-23	102A
B-23-1	102A
B-23-2	102A
B-24-1	102A
B-26	102A
B-26-1	102A
B-28	109
B-30	109
B-30P	109
B-31	116
B-46-110	178MP
B-66	123AP
B-169	123AP
B-315-1	158
B-324	158
B-1058	102A
B-1338	123AP
B-1421	123AP
B-1426	159
B-1433	123AP
B-1501U	116
B-1511	121
B-1599	177
B-1666	123AP
B-1695	185
B-1702	177
B-1790	184
B-1808	5072A
B-1823	152
B-1842	123AP
B-1872	123AP
B-1881U	116
B-1882U	116
B-1910	199
B-1914	121
B-6001	133
B-6002	145A
B-6288	159
B-6340	128
B-12822-2	130
B-12822-4	181
B-75561-31	159
B-75568-2	107
B-75583-1	123AP
B-75583-2	123AP
B-75583-202	123AP
B-75583-I02	123AP
B-75589-3	123AP
B-75589-13	123AP
B-75608-3	123AP
B-722246-2	123AP
B-F1A	158
B-T1000-139	107
B-T-1000-139	107
BA3-04	552
BA6	158
BA6A	158
BA8-1A-21	160
BA10C	167
BA20	5314
BA40	5314
BA60B	5313
BA67	123AP
BA71	123AP
BA100	116
BA102	614
BA104	116
BA105	116
BA108	116
BA109	614
BA109G	614
BA110	614
BA111	614
BA114	177
BA119	116
BA120	116
BA124	614
BA127	116
BA128	116
BA129	116
BA130	116
BA133	506
BA136A	5800
BA142-01	116
BA145	506
BA147	177
BA153	116
BA157	558
BA159	558
BA167	177
BA168	177
BA170	177
BA174	177
BA178	5800
BA182	177
BA187	177
BA202	519
BA208	165
BA216	519
BA219	519
BA222	1609
BA223	955S
BA223-20	525
BA243	177
BA243A	519
BA244	177
BA301	1135
BA301B	1135
BA302	1431
BA312	1433
BA313	1210
BA316	177
BA317	519
BA318	519
BA328	1659
BA328LN	1659
BA328MR	1170
BA329	1170
BA333	1466
BA401	1104
BA402	1100
BA404	1525
BA511	1165
BA511A	1165
BA521	1166
BA521A	1165
BA526	1612
BA532	1375
BA536	1619
BA546	1627
BA612	2084
BA614A	2083
BA664A	2083
BA715	1529
BA718	1529
BA847	1636
BA1003	172A
BA1350	1631
BA3704	1562
BA4110	1604
BA4220	1557
BA4558	778A
BA4558DX	778A
BA5102	1558
BA5102A	1558
BA5402	1619
BA5402A	1619
BA6124	1561
BA6144	1866
BA6209	1716
BA6209N	519
BA6209U	1716
BA6209UI	1716
BA6238	1834
BA6238A	1834
BA6238AU	1834
BA6304	1679
BA6304A	1679
BA6993	943M
BA-075	138A
BA-100	116
BA-104	116
BA-138	614
BA-142-01	116
BACSH2M1	123AP
BACSH2M2	123AP
BACSH2M3	123AP
BACSIM1	519
BACT2F	123AP
BAR10	584
BAR11	584
BAR28	583
BAS11	552
BAS16	593
BAS19	592
BAS20	592
BAS21	592
BAT18	594
BAT-18	594
BAV18	519
BAV20	177
BAV70	595
BAV205	5838
BAV206	5840
BAV207	5842
BAV208	5846
BAV209	5846
BAV215	5838
BAV216	5840
BAV217	5842
BAV218	5846
BAV219	5846
BAV225	5838
BAV226	5840
BAV227	5842
BAV228	5846
BAV229	5846
BAV305	5838
BAV306	5840
BAV307	5842
BAV308	5846
BAV309	5846
BAV315	5838
BAV316	5840
BAV317	5842
BAV318	5846
BAV319	5846
BAV325	5838
BAV326	5840
BAV327	5842
BAV328	5846
BAV329	5846
BAV405	5858
BAV406	5860
BAV407	5862
BAV408	5866
BAV409	5866
BAV415	5858
BAV416	5860
BAV417	5862
BAV418	5866

PART NUMBER	NTE REPLACEMENT
BAV419	5866
BAV425	5858
BAV426	5860
BAV427	5862
BAV428	5866
BAV429	5866
BAV505	5878
BAV506	5880
BAV507	5882
BAV508	5886
BAV509	5886
BAV515	5878
BAV516	5880
BAV517	5882
BAV518	5886
BAV519	5886
BAV525	5878
BAV526	5880
BAV527	5882
BAV528	5886
BAV529	5886
BAV705	5858
BAV706	5860
BAV707	5862
BAV708	5866
BAV709	5866
BAV715	5858
BAV716	5860
BAV717	5862
BAV718	5866
BAV719	5866
BAV725	5858
BAV726	5860
BAV727	5862
BAV728	5866
BAV729	5866
BAV805	5878
BAV806	5880
BAV807	5882
BAV808	5886
BAV809	5886
BAV815	5878
BAV816	5880
BAV817	5882
BAV818	5886
BAV819	5886
BAV825	5878
BAV826	5880
BAV827	5882
BAV828	5886
BAV829	5886
BAV3308	5846
BAV3309	5846
BAW10TF20	177
BAW11TF21	177
BAW12TF22	177
BAW13TF23	177
BAW16	177
BAW17	177
BAW18	177
BAW24	177
BAW24A	177
BAW24B	177
BAW25	177
BAW25A	177
BAW25B	177
BAW45	177
BAW53	177
BAW56	596
BAW59	177
BAW59A	177
BAW59B	177
BAW62	519
BAW63A	177
BAW63B	177
BAW76	519
BAW99	177
BAX12	116
BAX13	519
BAX16	177
BAX18	116
BAX28	177
BAX30	177
BAX74	177
BAX79C16	5025A
BAX79C18	5027A
BAX79C20	5029A
BAX79C22	5030A
BAX79C24	5031A
BAX79C27	5033A
BAX79C27A	146A
BAX87	177
BAX87A	177
BAX88TF11	177
BAX89A	177
BAX91C/TF102	519
BAX94C62	149A
BAX95TF600	519
BAX96C2V7	5002A
BAX96C3V3	5005A
BAX-13	519
BAX-16	177
BAY15	125
BAY16	125
BAY17	177
BAY18	177
BAY19	177
BAY20	177
BAY23	125
BAY31	519
BAY36	177
BAY41	177
BAY41A	177
BAY41B	177

PART NUMBER	NTE REPLACEMENT
BAY44	116
BAY46	5804
BAY52	177
BAY64	116
BAY68	177
BAY72	177
BAY73	177
BAY86	116
BAY87	116
BAY90	125
BAY93	519
BB1	506
BB1A	116
BB2	506
BB2A	552
BB2A184	116
BB2L	552
BB3I	552
BB3K	552
BB4	552
BB4-FC	552
BB4C	552
BB4T	552
BB6	552
BB6S	506
BB8	506
BB10	552
BB22	614
BB71	123AP
BB104	614
BB105	611
BB105A	611
BB105G	616
BB107	116
BB109	616
BB109G	614
BB117	116
BB122	612
BB127	116
BB142	612
BB526	615P
BB-2	125
BB-4	552
BB-6	552
BB-6S	116
BB-8	552
BB-10	506
BB-10S	506
BB-109	116
BBGS	506
BBIA	116
BC17LB-1	159
BC20C	199
BC25BB	159
BC45B	123AP
BC71	123AP
BC100	154
BC103	128
BC103C	128
BC107	123A
BC107A	123A
BC107B	123A
BC107C	123A
BC108	123A
BC108A	123A
BC108B	123A
BC108C	123A
BC109	123A
BC109B	123A
BC109BP	123AP
BC109C	123A
BC110	123AP
BC111	108
BC112	108
BC113	123A
BC114	123A
BC114TR	123AP
BC115	123
BC116	159
BC116A	159
BC117	154
BC118	123A
BC119	128
BC120	128
BC121	107
BC122	107
BC123	107
BC125	123AP
BC125A	123
BC125B	123
BC126	129
BC126-1	159
BC126A	129
BC127	199
BC128	199
BC129	123AP
BC129A	123AP
BC129B	123AP
BC130	123AP
BC130A	123AP
BC130B	123AP
BC131	123AP
BC131B	123AP
BC132	123A
BC132A	123AP
BC134	123AP
BC135	123AP
BC135A	161
BC136	123
BC137	129
BC137-1	159
BC138	128
BC139	129
BC139A	194

PART NUMBER	NTE REPLACEMENT
BC140	128
BC140-06	297
BC140-6	128
BC140-10	128
BC140-16	128
BC140C	128
BC140D	128
BC141	128
BC141-06	128
BC141-6	128
BC141-10	128
BC141-16	128
BC142	128
BC143	129
BC144	128
BC145	154
BC146	123AP
BC146G	123AP
BC146R	123AP
BC146Y	123AP
BC147	123AP
BC147A	123AP
BC147B	123AP
BC148	123AP
BC148A	123AP
BC148B	123AP
BC148C	123AP
BC149	123AP
BC149A	123AP
BC149B	123AP
BC149C	123AP
BC149G	123AP
BC150	123AP
BC151	123AP
BC152	123AP
BC153	159
BC153-1	159
BC154	159
BC154-1	159
BC155	107
BC155A	108
BC155B	123AP
BC155C	199
BC156	107
BC156A	108
BC156B	123AP
BC156C	199
BC157	159
BC157-1	159
BC157A	159
BC157B	159
BC157VI	194
BC158	159
BC158-1	159
BC158A	159
BC158A-1	159
BC158B	159
BC158B-1	159
BC158C	234
BC158VI	194
BC159	159
BC159-1	159
BC159A	159
BC159A-1	159
BC159B	159
BC159B-1	159
BC159C	234
BC160	129
BC160-06	294
BC160-6	129
BC160-10	129
BC160-16	129
BC161	129
BC161-06	193
BC161-6	129
BC161-10	129
BC161-16	129
BC167	199
BC167A	85
BC167B	199
BC168	85
BC168A	85
BC168B	199
BC168C	199
BC169	85
BC169A	85
BC169B	199
BC169C	199
BC169CL	199
BC170	199
BC170A	199
BC170B	199
BC170C	199
BC171	123AP
BC171A	123AP
BC171B	123AP
BC172	123AP
BC172A	123AP
BC172B	123AP
BC172C	123AP
BC173	199
BC173,B	128
BC173A	199
BC173B	199
BC173C	199
BC174	128
BC174A	128
BC174B	128
BC175	123AP
BC177	234
BC177-1	159
BC177A	234
BC177A-1	159
BC177B	234

PART NUMBER	NTE REPLACEMENT
BC177B-1	159
BC177V	159
BC177V1	159
BC177V1-1	159
BC177V-1	159
BC177VI	159
BC178	234
BC178-1	159
BC178A	234
BC178A-1	159
BC178B	234
BC178B-1	159
BC178C	234
BC178D	159
BC178D-1	159
BC178V	159
BC178V1	159
BC178V1-1	159
BC178V-1	159
BC178VI	159
BC179	234
BC179-1	159
BC179A	234
BC179A-1	159
BC179B	234
BC179B-1	159
BC179C	234
BC180	123AP
BC180B	123AP
BC181	159
BC181A	159
BC181A-1	159
BC182	123A
BC182A	123A
BC182B	123A
BC182K	199
BC182KA	199
BC182KB	199
BC182L	85
BC182LA	85
BC182LB	199
BC183	123A
BC183A	123A
BC183B	123A
BC183C	199
BC183K	199
BC183KA	199
BC183KB	199
BC183KC	199
BC183L	85
BC183LA	85
BC183LB	199
BC183LC	199
BC184	123A
BC184B	123A
BC184C	123A
BC184K	199
BC184KB	199
BC184KC	199
BC184L	85
BC184LB	199
BC184LC	199
BC185	123AP
BC186	123AP
BC187	159
BC187-1	159
BC188	107
BC189	107
BC190A	192
BC190B	192
BC192	159
BC192-1	159
BC194	108
BC194B	108
BC195	108
BC195CD	108
BC196	159
BC196-1	159
BC196A	159
BC196A-1	159
BC196B	159
BC196B-1	159
BC196V1	159
BC196V1-1	159
BC196VI	194
BC197	123AP
BC197A	123AP
BC197B	123AP
BC198	123AP
BC198A	123AP
BC198B	199
BC198C	123AP
BC199	123AP
BC199B	199
BC199C	123AP
BC200	159
BC200-1	159
BC200G	234
BC200R	159
BC200Y	159
BC201	159
BC201-1	159
BC202	159
BC202-1	159
BC203	159
BC203-1	159
BC204	234
BC204-1	159
BC204A	234
BC204A-1	159
BC204B	234
BC204B-1	159
BC204V	159
BC204V1	159

PART NUMBER	NTE REPLACEMENT
BC204V1-1	159
BC204V-1	159
BC204VI	159
BC205	159
BC205-1	159
BC205A	159
BC205A-1	159
BC205B	234
BC205B-1	159
BC205C	234
BC205L	159
BC205V	159
BC205V1	159
BC205V1-1	159
BC205V-1	159
BC205VI	159
BC206	234
BC206-1	159
BC206A	234
BC206B	234
BC206B-1	159
BC206C	234
BC207	123AP
BC207A	123AP
BC207B	123AP
BC207BL	123AP
BC208	123AP
BC208A	123AP
BC208AL	123AP
BC208B	123AP
BC208BL	123AP
BC208C	123AP
BC208CL	123AP
BC209	123AP
BC209/7825B	199
BC209A	123AP
BC209B	123AP
BC209BL	123AP
BC209C	123AP
BC209CL	123AP
BC210	123AP
BC211	128
BC212	159
BC212-1	159
BC212A	193
BC212B	193
BC212K	159
BC212K-1	159
BC212KA	159
BC212KA-1	159
BC212KB	159
BC212KB-1	159
BC212L	159
BC212L-1	159
BC212LA	159
BC212LA-1	159
BC212LB	159
BC212LB-1	159
BC212V1	159
BC212VI	159
BC213	159
BC213-1	159
BC213A	159
BC213B	193
BC213C	294
BC213K	159
BC213K-1	159
BC213KA	159
BC213KA-1	159
BC213KB	159
BC213KB-1	159
BC213KC	159
BC213KC-1	159
BC213L	159
BC213L-1	159
BC213LA	159
BC213LA-1	159
BC213LB	159
BC213LB-1	159
BC213LC	159
BC213LC-1	159
BC214	159
BC214-1	159
BC214A	159
BC214B	193
BC214C	294
BC214K	159
BC214K-1	159
BC214KA	159
BC214KA-1	159
BC214KB	159
BC214KB-1	159
BC214KC	159
BC214KC-1	159
BC214L	159
BC214L-1	159
BC214LA	159
BC214LA-1	159
BC214LB	159
BC214LB-1	159
BC214LC	159
BC214LC-1	159
BC215A	194
BC215B	194
BC216	128
BC216A	128
BC216B	128
BC220	123AP
BC221	159
BC221-1	159
BC222	123AP
BC223A	123AP
BC223B	123AP
BC224	193

PART NUMBER	NTE REPLACEMENT
BC225	234
BC225-1	159
BC226	192
BC231A	159
BC231B	193
BC231M	294
BC232A	128
BC232B	128
BC233A	123AP
BC236	194
BC237	123AP
BC237(PHIN)	199
BC237-18	123AP
BC237A	123AP
BC237A5	123AP
BC237A18	123AP
BC237B	123AP
BC237C5(CBE)	47
BC237C18(CBE)	47
BC237C(CBE)	47
BC238	123AP
BC238(PHIN)	199
BC238-5	128
BC238-16	159
BC238-18	128
BC238A	199
BC238A5	123AP
BC238A18	123AP
BC238B	123AP
BC238B5	123AP
BC238B18	123AP
BC238C	199
BC238C5	123AP
BC238C5(CBE)	47
BC238C18(CBE)	47
BC238CP(CBE)	47
BC239	123AP
BC239(PHIN)	199
BC239-5	123AP
BC239-18	123AP
BC239A	199
BC239B	199
BC239C	199
BC239C5(CBE)	47
BC239C18(CBE)	47
BC239C(CBE)	47
BC250	159
BC250-1	159
BC250A	159
BC250A-1	159
BC250B	159
BC250B-1	159
BC250C	159
BC250C-1	159
BC251	159
BC251A	159
BC251A-1	159
BC251B	159
BC251B-1	159
BC251C	159
BC251C-1	159
BC252	159
BC252-1	159
BC252A	159
BC252A-1	159
BC252B	159
BC252B-1	159
BC252C	159
BC252C-1	159
BC253	159
BC253-1	159
BC253A	159
BC253A-1	159
BC253B	159
BC253B-1	159
BC253C	159
BC253C-1	159
BC254	128
BC255	128
BC256	159
BC256-1	159
BC256A	159
BC256A-1	159
BC256B	159
BC256B-1	159
BC256C-1	159
BC257	159
BC257-1	159
BC257A	193
BC257B	193
BC257VI	159
BC258	159
BC258-1	159
BC258A	193
BC258B	193
BC258C	234
BC258VI	159
BC259	159
BC259-1	159
BC259A	193
BC259B	193
BC259C	232
BC260	159
BC260-1	159
BC260A	159
BC260A-1	159
BC260B	159
BC260B-1	159
BC260C	159
BC260C-1	159
BC261	159
BC261A	159
BC261A-1	159
BC261B	159

PART NUMBER	NTE REPLACEMENT
BC261B-1	159
BC261C	159
BC261C-1	159
BC262	159
BC262-1	159
BC262A	159
BC262A-1	159
BC262B	159
BC262B-1	159
BC262C	159
BC262C-1	159
BC263	159
BC263A	159
BC263A-1	159
BC263B	159
BC263B-1	159
BC263C	159
BC263C-1	159
BC264A	457
BC264C	133
BC266	159
BC266-1	159
BC266A	159
BC266B	159
BC267	123AP
BC268	123AP
BC269	123AP
BC270	123AP
BC271	161
BC280	123AP
BC280A	123AP
BC280B	123AP
BC280C	123AP
BC281	159
BC281-1	159
BC281A	159
BC281A-1	159
BC281B	159
BC281B-1	159
BC281C	159
BC281C-1	159
BC282	123AP
BC283	159
BC283-1	159
BC284	123AP
BC284A	123AP
BC284B	123AP
BC285	123AP
BC286	128
BC287	129
BC288	128
BC289	123AP
BC289A	123AP
BC289B	123AP
BC290	123AP
BC290B	123AP
BC290C	123AP
BC291	159
BC291-1	159
BC291A	159
BC291A-1	159
BC291D	159
BC291D-1	159
BC292	159
BC292A	159
BC292A-1	159
BC292D	159
BC292D-1	159
BC295	108
BC297	193
BC297-7	294
BC298	193
BC300-4	128
BC301	128
BC301-4	128
BC301-5	128
BC302-4	192
BC302-5	192
BC302-6	192
BC303	129
BC303-4	129
BC303-5	129
BC303-6	129
BC304-4	129
BC304-5	129
BC304-6	129
BC307	159
BC307(ALGG)	159
BC307(PHIN)	159
BC307-5	159
BC307-18	159
BC307A	159
BC307B	159
BC307C	234
BC307V1	159
BC307VI	159
BC307VI5	159
BC307VII8	159
BC308	159
BC308(ALGG)	290
BC308(SIEG)	232
BC308-5	159
BC308-18	159
BC308A	159
BC308B	159
BC308C	47
BC308V1	159
BC308VI	194
BC308VI5	159
BC309	159
BC309(ALGG)	159
BC309(SIEG)	159
BC309-5	159
BC309-18	159

PART NUMBER	NTE REPLACEMENT
BC309A	159
BC309B	159
BC309C	159
BC310	128
BC311	129
BC312	198
BC313	129
BC315	159
BC317	123AP
BC317A	123AP
BC317B	123AP
BC318	123AP
BC318A	123AP
BC318B	123AP
BC318C	123AP
BC319	123AP
BC319B	123AP
BC319C	123AP
BC320	159
BC320A	234
BC320C	234
BC321	234
BC321A	234
BC321B	234
BC321C	234
BC322	234
BC322B	234
BC322C	234
BC324	128
BC325	159
BC325A	159
BC326	159
BC326A	159
BC327	159
BC327-5	159
BC327-16	159
BC327-18	159
BC328	159
BC328-5	159
BC328-16	159
BC328-18	159
BC337	123AP
BC337-16	123AP
BC337-25	123AP
BC337-40	123AP
BC338	123AP
BC338-16	123AP
BC338-25	123AP
BC338-40	123AP
BC340-06	293
BC340-6	128
BC340-10	128
BC340-16	128
BC341-06	128
BC341-6	128
BC341-10	128
BC350	159
BC350A	159
BC350B	159
BC350L	159
BC351	159
BC351A	159
BC351B	159
BC351L	159
BC352	159
BC352B	159
BC352L	159
BC360-06	294
BC360-6	129
BC360-10	129
BC360-16	129
BC361-06	193
BC361-6	129
BC361-10	129
BC368	128
BC370	193
BC370VI	159
BC377	192
BC378	192
BC381	159
BC382	194
BC382B	199
BC382C	199
BC383	194
BC383B	199
BC383C	199
BC384	194
BC384B	199
BC384C	199
BC385A	199
BC385B	199
BC386A	199
BC386B	199
BC394	154
BC395	194
BC396	129
BC400	159
BC404	159
BC404A	129
BC404V1	129
BC404VI	159
BC405	159
BC405A	159
BC405B	159
BC406	193
BC406B	159
BC407	199
BC407A	199
BC407B	123AP
BC408	123AP
BC408A	199
BC408B	199
BC408C	199
BC409	123AP
BC409B	123AP
BC409C	123AP
BC412	195A
BC413	199
BC413B	199
BC413C	199
BC413C(CBE)	47
BC413CP(CBE)	47
BC414	199
BC414B	199
BC414C	199
BC414C(CBE)	47
BC414CP(CBE)	47
BC415	159
BC415-6	159
BC415A	159
BC415B	159
BC416	159
BC416-6	159
BC416A	159
BC416B	159
BC417	159
BC418	159
BC418A	159
BC418B	294
BC419	159
BC419A	159
BC419B	294
BC429	128
BC430	188
BC431	123AP
BC431B	123AP
BC432	159
BC442	107
BC446	159
BC446-5	159
BC446-18	159
BC452	123AP
BC455	123AP
BC456	229
BC460	189
BC461	189
BC461-4	193
BC461-5	193
BC461-6	193
BC477	129
BC477A	129
BC477V1	129
BC477VI	194
BC478	159
BC478A	159
BC478B	159
BC479	159
BC479B	159
BC485	123A
BC485A	123A
BC485B	123A
BC485L	123A
BC507A	123AP
BC507B	123AP
BC508	192
BC508A	123AP
BC508B	123AP
BC508C	123AP
BC509	192
BC509B	123AP
BC509C	123AP
BC510	192
BC510B	123AP
BC510C	107
BC512	159
BC512A	159
BC512B	193
BC513	159
BC513A	159
BC513B	193
BC513C	294
BC514	193
BC514A	159
BC514B	193
BC514C	294
BC520	199
BC520B	199
BC520C	199
BC521	199
BC521C	199
BC521D	199
BC522	199
BC522C	199
BC522D	199
BC522E	199
BC523	199
BC523B	199
BC523C	199
BC526A	234
BC526B	234
BC526C	234
BC527	129
BC528	129
BC532	194
BC533	194
BC534	129
BC535	128
BC537	128
BC538	128
BC546	123AP
BC546A	123AP
BC546B	123AP
BC546C	199
BC547	123AP
BC547A	123AP
BC547B	123AP
BC547C	199
BC547VI	199
BC548	123AP
BC548A	123A
BC548B	123AP
BC548BC	123AP
BC548C	123AP
BC548VI	123AP
BC549	123AP
BC549A	123AP
BC549B	123AP
BC549C	199
BC550	123AP
BC550A	123AP
BC550B	123AP
BC550C	199
BC556	159
BC556A	159
BC556VI	159
BC557	159
BC557A	159
BC557B	159
BC557VI	159
BC558	159
BC558A	294
BC558B	159
BC558VI	159
BC559	159
BC559A	294
BC559B	159
BC560A	294
BC560B	294
BC560PA	159
BC560PAK	159
BC560PAL	159
BC560PAM	159
BC560PB	159
BC560PBK	159
BC560PBL	159
BC560PBM	159
BC560PC(ECB)	234
BC560PCK(ECB)	234
BC560PCL(ECB)	234
BC560PCN(ECB)	234
BC582	192
BC582A	192
BC582B	192
BC583	123AP
BC583A	192
BC583B	192
BC584	192
BC585	2409
BC635	382
BC636	383
BC637	297
BC638	383
BC640	383
BC682	194
BC727	129
BC728	129
BC737	128
BC737-10	192
BC738	128
BC846	2408
BC846A	2408
BC846B	2408
BC847	2408
BC847A	2408
BC847B	2408
BC848	2408
BC848A	2408
BC848B	2408
BC856	2409
BC856A	2409
BC856B	2409
BC857	2409
BC857A	2409
BC857B	2409
BC857C	2409
BC858	2409
BC858A	2409
BC858B	2409
BC858C	2409
BC859	2409
BC859A	2409
BC859B	2409
BC859C	2409
BC860	2409
BC860A	2409
BC860B	2409
BC860C	2409
BC1029LB	917
BC1073	104
BC1073A	104
BC1096	123AP
BC1274	104
BC1274A	104
BC1274B	104
BC1473	399
BC1478	123AP
BC3337	293
BC6500	108
BC-71	123AP
BC-107	123AP
BC-107A	123AP
BC-108	123AP
BC-108B	123AP
BC-109B	123AP
BC-114	123AP
BC-119	128
BC-121	123AP
BC-122	123AP
BC-123	123AP
BC-138	128
BC-140	128
BC-140A	128
BC-140B	128
BC-140C	128
BC-140D	128
BC-141	128
BC-142	128
BC-148A	123AP
BC-148B	123AP
BC-148C	123AP
BC-167-B	123AP
BC-169-C	123AP
BC-169B	123AP
BC-169C	123AP
BC-207	123AP
BC-261	192
BC-307	159
BC-1072	123AP
BC-1082	123AP
BC-1086	123AP
BC-1096	123AP
BC-1690	123AP
BCF5	117
BCL4000B	4000
BCL4001B	4001B
BCL4001UB	4001B
BCL4002B	4002B
BCL4006B	4006B
BCL4007UB	4007
BCL4008B	4008B
BCL4011B	4011B
BCL4011UB	4011B
BCL4012B	4012B
BCL4013B	4013B
BCL4014B	4014B
BCL4015B	4015B
BCL4016B	4016B
BCL4017B	4017B
BCL4018B	4018B
BCL4020B	4020B
BCL4021B	4021B
BCL4022B	4022B
BCL4023B	4023B
BCL4024B	4024B
BCL4025B	4025B
BCL4027B	4027B
BCL4028B	4028B
BCL4029B	4029B
BCL4034B	4034B
BCL4035B	4035B
BCL4040B	4040B
BCL4041UB	4041
BCL4042B	4042B
BCL4043B	4043B
BCL4047B	4047B
BCL4049UB	4049
BCL4050B	4050B
BCL4051B	4051B
BCL4052B	4052B
BCL4053B	4053B
BCL4066B	4066B
BCL4068B	4068B
BCL4069UB	4069
BCL4070B	4070B
BCL4071B	4071B
BCL4073B	4073B
BCL4075B	4075B
BCL4076B	4076B
BCL4077B	4077B
BCL4078B	4078B
BCL4081B	4081B
BCL4082B	4082B
BCL4085B	4085B
BCL4086B	4086B
BCL4093B	4093B
BCL4502B	4502B
BCL4510B	4510B
BCL4511B	4511B
BCL4512B	4512B
BCL4514B	4514B
BCL4515B	4515B
BCL4516B	4516B
BCL4518B	4518B
BCL4520B	4520B
BCL4522B	4522B
BCL4528B	4528B
BCL4543B	4543B
BCL4555B	4555B
BCL4556B	4556B
BCL4585B	4585B
BCM1002-1	160
BCM1002-2	107
BCM1002-3	158
BCM1002-4	102A
BCM1002-5	102A
BCM1002-6	131
BCM1002-18	158
BCR10AM8L	56006
BCR10AM10L	56008
BCR25A-4	5683
BCR25A-6	5685
BCR25A-8	5685
BCR25A-10	5687
BCV26	2405
BCV27	2404
BCV28	2427
BCV29	2426
BCV48	2427
BCV49	2426
BCV29	2409
BCW29R	106
BCW30	2409
BCW31	108
BCW31R	108
BCW32	2408
BCW32R	108
BCW34	123AP
BCW35	159
BCW36	123AP
BCW37	159
BCW37A	159
BCW44	192
BCW45	193
BCW46	128
BCW47	128
BCW48	128
BCW48A	123AP
BCW49	128
BCW50	171
BCW51	192
BCW52	193
BCW56	159
BCW56A	159
BCW57	159
BCW57A	159
BCW57B	294
BCW58	159
BCW58A	159
BCW58B	234
BCW59	159
BCW59A	159
BCW59B	234
BCW60	2408
BCW60A	2408
BCW60AA	123AP
BCW60AB	123AP
BCW60AC	123AP
BCW60B	2408
BCW60C	2408
BCW61	2409
BCW61A	193
BCW61B	2409
BCW61BA	193
BCW61BB	193
BCW61BC	234
BCW61BD	234
BCW61C	2409
BCW61D	2409
BCW62	159
BCW62A	159
BCW62B	193
BCW63	159
BCW63A	159
BCW63B	193
BCW63C	294
BCW64	193
BCW64A	159
BCW64B	193
BCW64C	294
BCW65EA	123AP
BCW65EB	123AP
BCW65EC	293
BCW66EF	293
BCW66EG	293
BCW66EH	293
BCW66EW	293
BCW67	2406
BCW67A	2406
BCW67B	2406
BCW67C	2406
BCW67DA	294
BCW67DB	294
BCW67DC	294
BCW68	2406
BCW68DF	294
BCW68DG	294
BCW68DH	294
BCW68F	2406
BCW68G	2406
BCW69	2409
BCW70	2409
BCW70R	193
BCW71	108
BCW71R	108
BCW72	2408
BCW72R	108
BCW73	123A
BCW73-16	192
BCW73-25	123A
BCW74	123A
BCW74-16	192
BCW74-25	123A
BCW75-10	193
BCW75-16	193
BCW75-25	159
BCW76-10	193
BCW76-16	193
BCW77-16	192
BCW77-25	128
BCW78	128
BCW78-16	192
BCW78-25	128
BCW79-10	159
BCW79-16	159
BCW79-25	211
BCW80	129
BCW80-10	159
BCW80-16	159
BCW80-25	211
BCW82	192
BCW82A	192
BCW82B	192
BCW83	123AP
BCW83A	192
BCW83B	192
BCW84	192
BCW84B	85
BCW86	159
BCW87	199
BCW88	234
BCW89	2409
BCW90	192
BCW90A	293
BCW90B	293
BCW90C	293
BCW90K	192
BCW90KA	293
BCW90KB	293
BCW90KC	293
BCW91	192
BCW91A	192
BCW91B	192
BCW91K	192
BCW91KA	192
BCW91KB	192
BCW92	193
BCW92A	294
BCW92B	294
BCW92K	193
BCW92KA	294
BCW92KB	294
BCW93	129
BCW93B	129
BCW94	123AP
BCW94A	123AP
BCW94B	123AP
BCW94C	123AP
BCW94K	128
BCW94KA	123AP
BCW94KB	123AP
BCW94KC	123AP
BCW95	128
BCW95A	123AP
BCW95B	123AP
BCW95K	128
BCW95KA	123AP
BCW95KB	123AP
BCW96	159
BCW96A	159
BCW96B	159
BCW96K	193
BCW96KA	159
BCW96KB	159
BCW97	159
BCW97A	159
BCW97B	159
BCW97K	193
BCW97KA	159
BCW97KB	159
BCW98A	199
BCW98B	199
BCW98C	199
BCW98D	199
BCW99A	294
BCW99B	294
BCW99C	294
BCX10	211
BCX17	159
BCX17R	159
BCX18	288
BCX18R	288
BCX19	123AP
BCX19R	123AP
BCX20	123AP
BCX20R	123AP
BCX51	2429
BCX52	2429
BCX53	2429
BCX54	2428
BCX55	2428
BCX56	2428
BCX58IX	293
BCX58VII	123AP
BCX58VIII	123AP
BCX58X	293
BCX59IX	293
BCX59VII	293
BCX59VIII	293
BCX59X	293
BCX68	2428
BCX69	2429
BCX70	2408
BCX70AG	123AP
BCX70AH	123AP
BCX70AJ	123AP
BCX70G	2408
BCX70H	2408
BCX70J	2408
BCX70K	2408
BCX71	2409
BCX71BG	193
BCX71BH	193
BCX71BJ	234
BCX71BK	234
BCX71H	2409
BCX71J	2409
BCX71K	2409
BCX73-16	293
BCX73-25	293
BCX73-40	293
BCX74-16	293
BCX74-25	293
BCX74-40	293
BCX75-16	294
BCX75-25	294
BCX75-40	294
BCX76-25	294
BCX76-40	294
BCX78IX	294
BCX78VII	106
BCX78VIII	294
BCX79IX	294
BCX79VII	106
BCX79VIII	294
BCY10	159
BCY10A	159
BCY11	159
BCY11A	159
BCY12	159
BCY12A	159
BCY13	123AP
BCY15	123AP
BCY16	123AP
BCY17	129
BCY18	129
BCY19	129
BCY21	129
BCY22	129
BCY23	129
BCY24	129
BCY25	129
BCY26	129
BCY27	129
BCY28	129
BCY29	129
BCY30	129
BCY31	129
BCY32	129
BCY33	129
BCY34	129
BCY35	159
BCY35A	159
BCY36	123AP
BCY37	159
BCY37A	159
BCY38	159
BCY38A	159
BCY39	159
BCY39A	159
BCY40	159
BCY40A	159
BCY42	123AP
BCY43	123AP
BCY46	128
BCY47	128
BCY48	128
BCY49	128
BCY50	123A
BCY50I	160
BCY51	123AP
BCY51I	160
BCY54	159
BCY54A	159
BCY55	199
BCY56	123A
BCY57	123A
BCY58	123A
BCY58-7	123A
BCY58-8	123A
BCY58-9	123A
BCY58-10	123A
BCY58A	123A
BCY58B	123A
BCY58C	123A
BCY58D	123A
BCY58IX	123A
BCY58VII	192
BCY58VIII	192
BCY58X	123A
BCY59	123A
BCY59-7	123A
BCY59-8	123A
BCY59-9	123A
BCY59-10	123A
BCY59A	123A
BCY59B	123A
BCY59C	123A
BCY59D	123A
BCY59IX	123A
BCY59VII	192
BCY59VIII	192
BCY59X	123A
BCY65	128
BCY66	128
BCY67	129
BCY69	123AP
BCY70	159
BCY70A	159
BCY71	159
BCY71A	159
BCY72	159
BCY72A	159
BCY77VII	159
BCY77VIII	159
BCY78	234
BCY78A	193
BCY78B	193
BCY78C	294
BCY78IX	159
BCY78VII	193
BCY78VIII	193
BCY79	234
BCY79A	193
BCY79B	193
BCY79C	294
BCY79IX	159
BCY79VII	159
BCY79VIII	193
BCY84A	123AP
BCY85	194
BCY86	194
BCY87	108
BCY88	108
BCY89	108
BCY90	159
BCY90A	159
BCY90B	159
BCY90B-1	159

PART NUMBER	NTE REPLACEMENT
BCY91	159
BCY91A	159
BCY91B	102A
BCY91B-1	159
BCY92	159
BCY92A	159
BCY92B	159
BCY92B-1	159
BCY93	159
BCY93A	159
BCY93B	159
BCY93B-1	159
BCY94	159
BCY94A	159
BCY94B	159
BCY94B-1	159
BCY95	159
BCY95A	159
BCY95B	159
BCY95B-1	159
BCY96	129
BCY96B	129
BCY97	129
BCY97B	129
BCY98	159
BCY98A	159
BCY98B	159
BCY98B-1	159
BCY443	128
BCY501	123AP
BCY511	123AP
BCY771X	159
BCY-50	123AP
BCY-58	123AP
BCZ10	159
BCZ10A	159
BCZ10B	159
BCZ10C	159
BCZ11	159
BCZ11A	159
BCZ12	159
BCZ12A	159
BCZ12B	159
BCZ12C	159
BCZ13	159
BCZ13A	159
BCZ13B	159
BCZ13C	159
BCZ13D	159
BCZ13E	159
BCZ13F	159
BCZ13G	159
BCZ13H	159
BCZ14	159
BCZ14A	159
BCZ14B	159
BCZ14C	159
BCZ14D	159
BCZ14E	159
BCZ14F	159
BD0A	116
BD3.6FB	5006A
BD3A-1B4	166
BD3A-184	117
BD28	6407
BD71	108
BD93	390
BD106	152
BD106A	152
BD106B	152
BD107	186
BD107A	152
BD107B	152
BD109	152
BD109-6	152
BD111	130
BD111A	181
BD112	130
BD113	130
BD115	154
BD116	130
BD117	116
BD118	130
BD119	124
BD120	124
BD121	130
BD123	280
BD124	152
BD127	124
BD128	124
BD129	124
BD130	130
BD131	184
BD132	242
BD135	375
BD135-6	184
BD135-10	184
BD136	374
BD136-6	185
BD136-10	185
BD137	375
BD137-6	184
BD137-10	184
BD138	374
BD138-6	185
BD138-10	185
BD139	375
BD139-6	184
BD139-10	184
BD140	374
BD140-6	185
BD140-10	185
BD141	280
BD142	130
BD144	162
BD145	130
BD148	182
BD148-6	182
BD148-10	182
BD149	184
BD149-6	182
BD149-10	182
BD151	185
BD152	185
BD153	184
BD154	184
BD155	184
BD156	185
BD157	157
BD158	157
BD160	162
BD162	152
BD163	152
BD165	184
BD166	185
BD167	184
BD168	185
BD169	182
BD170	183
BD171	228A
BD172	228A
BD173	228A
BD175	184
BD176	185
BD177	184
BD178	185
BD179	182
BD180	183
BD181	130
BD182	130
BD183	284
BD183ELK	130
BD184	280
BD185	184
BD186	185
BD187	184
BD188	185
BD189	184
BD190	185
BD195	184
BD196	185
BD197	184
BD198	183
BD199	182
BD200	183
BD201	182
BD202	332
BD203	182
BD204	183
BD205	184
BD206	185
BD207	184
BD208	185
BD213/45	182
BD213/60	182
BD213/80	182
BD214-45	183
BD214/45	183
BD214/60	183
BD214/80	183
BD215	157
BD216	157
BD220	152
BD221	152
BD222	152
BD223	153
BD224	153
BD225	153
BD226	373
BD227	374
BD228	373
BD229	374
BD230	373
BD231	374
BD231A	152
BD232	157
BD233	184
BD234	185
BD235	184
BD236	185
BD237	184
BD238	185
BD239	152
BD239A	152
BD239B	196
BD239C	331
BD240	153
BD240A	153
BD240B	197
BD240C	332
BD241	152
BD241A	152
BD241B	196
BD242	153
BD242A	153
BD242B	197
BD242C	332
BD243	331
BD243A	331
BD243B	331
BD243C	331
BD244	332
BD244A	332
BD244B	332
BD244C	332
BD245	390
BD245A	390
BD245B	390
BD245C	284
BD246	180
BD246A	180
BD246B	180
BD246C	180
BD249	392
BD249A	392
BD249B	392
BD249C	392
BD250	393
BD250A	393
BD250B	393
BD250C	180
BD257	392
BD258	393
BD262	254
BD262(DARLINGTON)	254
BD262A	153
BD262A(DARLINGTON)	254
BD263	253
BD263A	259
BD264	264
BD264A	264
BD265	263
BD266	264
BD266A	264
BD267	263
BD267A	263
BD271	152
BD272	153
BD273	196
BD274	197
BD275	196
BD276	197
BD278	196
BD291	196
BD293	196
BD301	182
BD302	183
BD303	182
BD304	183
BD304/B	378
BD306A	184
BD307A	184
BD311	181
BD312	219
BD313	181
BD314	180
BD315	181
BD316	68
BD317	181
BD318	68
BD375	184
BD376	185
BD377	184
BD433	184
BD434	185
BD435	184
BD436	185
BD437	184
BD438	185
BD439	184
BD440	185
BD441	184
BD442	185
BD446A	254
BD461	182
BD462	183
BD463	182
BD464	183
BD517	188
BD533	152
BD534	153
BD534L	153
BD535	152
BD535/A	152
BD536	153
BD537	196
BD538	197
BD561	184
BD562	185
BD575	241
BD576	242
BD577	241
BD578	242
BD579	196
BD580	242
BD581	182
BD582	183
BD585	241
BD586	242
BD587	241
BD588	242
BD589	241
BD590	242
BD591	196
BD595	182
BD596	183
BD597	182
BD598	183
BD600	183
BD601	182
BD605	182
BD606	183
BD607	182
BD608	183
BD609	182
BD610	183
BD633	196
BD635	196
BD637	182
BD643	263
BD644	264
BD645	263
BD646	264
BD647	263
BD648	264
BD649	263
BD650	264
BD651	263
BD652	264
BD663A	182
BD663B	182
BD675	253
BD675A	253
BD676	254
BD676A	254
BD677	253
BD677A	253
BD678	254
BD678A	254
BD679	253
BD679A	253
BD680	254
BD680A	254
BD695A	259
BD697	270
BD697A	259
BD698	271
BD699	259
BD699A	259
BD701	259
BD705	331
BD706	332
BD707	331
BD708	332
BD709	331
BD710	332
BD711	331
BD712	332
BD733	196
BD735	196
BD737	196
BD785	184
BD786	185
BD787	184
BD788	184
BD790	189
BD795	331
BD796	332
BD797	331
BD798	332
BD799	331
BD800	332
BD801	331
BD802	332
BD805	331
BD806	332
BD807	331
BD808	332
BD809	331
BD810	332
BD826	187A
BD875	253
BD876	254
BD877	253
BD895	263
BD895A	263
BD896	264
BD896A	264
BD897	263
BD897A	263
BD898	264
BD898A	264
BD899	263
BD899A	263
BD900	2344
BD900A	2344
BD901	2343
BD901A	263
BD902	2344
BD902A	264
BD905	331
BD906	332
BD907	331
BD908	332
BD909	331
BD910	332
BD911	331
BD912	332
BD933	54
BD934	55
BD935	54
BD936	55
BD937	54
BD938	55
BD939	54
BD940	55
BD941	54
BD941F	54
BD942	55
BD943	152
BD944	153
BD945	152
BD946	153
BD947	152
BD948	153
BD949	152
BD950	153
BD951	377
BD952	378
BD953	54
BD954	55
BD955	54
BD956	55
BD70932	4093B
BD-00072	103A
BD-1A	116
BD-3A184	166
BD-107	116
BD-107(RECT)	116
BD-127	116
BD-131	241
BD-132	242
BDOA	166
BDT29	291
BDT29A	291
BDT29B	291
BDT29C	291
BDT30	292
BDT30A	292
BDT30B	292
BDT30C	292
BDT31	291
BDT31A	291
BDT31B	291
BDT31C	291
BDT32	292
BDT32A	292
BDT32B	292
BDT32C	292
BDT41	331
BDT41A	331
BDT41B	331
BDT41C	331
BDT42	332
BDT42A	332
BDT42B	332
BDT42C	332
BDT60	262
BDT60A	262
BDT60B	262
BDT60C	2344
BDT61	261
BDT61A	261
BDT61B	261
BDT61C	2343
BDT62	264
BDT62A	264
BDT62B	264
BDT62C	2344
BDT63	263
BDT63A	263
BDT63B	2343
BDT63C	2343
BDT64	2344
BDT64A	2344
BDT64B	2344
BDT64C	2344
BDT65	2343
BDT65A	2343
BDT65B	2343
BDT65C	2343
BDT91	331
BDT92	332
BDT93	331
BDT94	332
BDV64	271
BDV64A	271
BDV64B	271
BDV64C	271
BDV65	270
BDV65A	270
BDV65B	270
BDV91	390
BDV92	391
BDV93	390
BDV94	391
BDV95	390
BDV96	391
BDW23	261
BDW23A	261
BDW23B	261
BDW23C	2343
BDW24	262
BDW24A	262
BDW24B	262
BDW24C	2344
BDW51	60
BDW51A	60
BDW51B	60
BDW51C	60
BDW52	61
BDW52A	61
BDW52B	61
BDW52C	61
BDW93	263
BDW93A	263
BDW93B	263
BDW93C	263
BDW94	264
BDW94A	264
BDW94B	264
BDW94C	264
BDX10	280
BDX11	280
BDX12	162
BDX13	181
BDX18	219
BDX18N	219
BDX20	285
BDX23	283
BDX24	280
BDX25	291
BDX27	153
BDX27-6	153
BDX27-10	153
BDX28	153
BDX28-6	153
BDX28-10	153
BDX29	291
BDX29-6	291
BDX29-10	291
BDX30	291
BDX30-6	291
BDX30-10	291
BDX32	238
BDX33	263
BDX33A	263
BDX33B	263
BDX33C	2343
BDX33D	263
BDX34	264
BDX34A	264
BDX34B	264
BDX34C	2344
BDX34D	264
BDX40	130
BDX41	181
BDX42	253
BDX43	253
BDX45	254
BDX46	254
BDX50	284
BDX51	284
BDX53	263
BDX53A	263
BDX53B	263
BDX54	264
BDX54A	264
BDX54B	264
BDX60	284
BDX61	284
BDX62	244
BDX62A	244
BDX62B	244
BDX63	243
BDX63A	247
BDX64	248
BDX64A	248
BDX64B	248
BDX65	247
BDX65A	247
BDX65B	247
BDX66	250
BDX66A	250
BDX66B	248
BDX67	249
BDX67A	249
BDX70	196
BDX71	196
BDX72	196
BDX73	196
BDX74	152
BDX75	152
BDX77	331
BDX78	332
BDX83	247
BDX83A	247
BDX83B	247
BDX83C	247
BDX85	247
BDX85A	247
BDX85B	247
BDX85C	247
BDX86	248
BDX86A	248
BDX86B	248
BDX86C	248
BDX87	247
BDX87A	247
BDX87B	247
BDX87C	247
BDX88	248
BDX88A	248
BDX88B	248
BDX88C	248
BDX91	130
BDX93	130
BDX95	162
BDX96	180
BDX250	284
BDY10	181
BDY11	181
BDY12	152
BDY13	152
BDY13-10	152
BDY15	155
BDY15A	155
BDY15B	155
BDY15C	155
BDY16	175
BDY16A	155
BDY16B	155
BDY17	130
BDY18	284
BDY19	284
BDY20	284
BDY23	130
BDY23A	181
BDY23B	181
BDY23C	280
BDY24	283
BDY25	283
BDY26	283
BDY27	283
BDY28	283
BDY34	152
BDY37	284
BDY38	130
BDY39	130
BDY53	130
BDY54	162
BDY55	284
BDY56	284
BDY57	327
BDY58	327
BDY60	179
BDY61	179
BDY63	280
BDY65	190
BDY66	190
BDY69	281
BDY70	129
BDY71	175
BDY72	175
BDY73	284
BDY74	280
BDY76	181
BDY77	284
BDY78	175
BDY79	175
BDY80	152
BDY81	291
BDY82	153
BDY83	153
BDY90	328
BDY90(AUDIO)	280
BDY91	328
BDY91(AUDIO)	280
BDY92	328
BDY92(AUDIO)	280
BDY93	283
BDY93/01	165
BDY94	283
BDY95	162
BDY97	385
BDY97C	385
BDY99	162
BDY-10	181
BE6	100
BE6A	100
BE71	128
BE107	116
BE117	116
BE127	116
BE173	107
BE-26	218
BE-55	614
BE-66	123AP
BF1	102A
BF1A	102A
BF2	102A
BF5	121
BF40B84	5309
BF65	234
BF71	123AP
BF108	154
BF109	154
BF110	154
BF111	154
BF114	154
BF115	123AP
BF117	154
BF118	154
BF119	154
BF120	287
BF121	107
BF123	107
BF125	107
BF127	107
BF137	171
BF140	154
BF140A	154
BF140R	154
BF140S	154
BF152	108
BF153	108-1
BF154	108
BF155	161
BF155R	154
BF155S	154
BF156	154
BF157	154
BF157B	154
BF158	108
BF159	108
BF160	108-1
BF161	161
BF162	108
BF163	108
BF164	108
BF165	108
BF166	161
BF167	161
BF168	161
BF169	161
BF173	161
BF173A	108
BF174	154
BF175	161
BF176	108
BF177	154
BF178	154
BF179	154
BF179A	154
BF179B	154
BF179C	154
BF180	161
BF181	161
BF182	161
BF183	161
BF183A	123AP
BF184	161
BF185	161
BF186	154
BF187	108
BF188	108
BF189	123AP
BF194	107

PART NUMBER	NTE REPLACEMENT
BF194A	108
BF194B	107
BF195	107
BF195C	107
BF195D	107
BF196	107
BF197	107
BF198	229
BF199	229
BF200	161
BF200(ZENITH)	107
BF206	161
BF207	161
BF208	161
BF209	161
BF212	161
BF213	161
BF214	161
BF215	161
BF216	107
BF217	107
BF218	107
BF219	107
BF220	107
BF222	161
BF223	108
BF224	108
BF224J	123AP
BF225	108
BF225J	123AP
BF226	161
BF227	161
BF228	194
BF229	107
BF230	107
BF232	161
BF233-2	108
BF233-3	108
BF233-4	108
BF233-5	108
BF233-6	229
BF234	229
BF235	108
BF236	108
BF237	108
BF238	108
BF240	107
BF240B	229
BF241	107
BF241C	229
BF241D	229
BF243	234
BF244	133
BF244A	132
BF244B	132
BF244C	132
BF245	133
BF245A	133
BF245B	133
BF245C	133
BF246	133
BF247	133
BF248	123AP
BF249	159
BF250	123AP
BF251	161
BF252	161
BF253	107
BF254	108
BF254B	161
BF255	108
BF255C	161
BF255D	161
BF256	132
BF256A	133
BF256B	133
BF256C	133
BF257	154
BF258	154
BF259	154
BF260	161
BF261	161
BF262	108
BF263	108
BF264	108
BF270	161
BF271	161
BF273	161
BF273C	161
BF273D	161
BF274	161
BF274B	161
BF274C	161
BF279	161
BF287	161
BF288	161
BF290	161
BF291	123AP
BF291A	123AP
BF291B	123AP
BF292	171
BF292A	154
BF292B	154
BF292C	154
BF293	123AP
BF293A	123AP
BF293D	123AP
BF294	154
BF297	194
BF298	288
BF299	288
BF302	161
BF303	311
BF304	161
BF305	154
BF306	278
BF308	311
BF309	311
BF310	107
BF311	107
BF314	311
BF315	106
BF316	106
BF321A	123
BF321B	123AP
BF321C	123AP
BF321D	123AP
BF321E	123AP
BF321F	123AP
BF322	278
BF323	294
BF324	395
BF325	278
BF329	107
BF330	278
BF332	107
BF333	107
BF333C	107
BF333D	107
BF334	107
BF335	107
BF336	154
BF337	154
BF338	154
BF339	106
BF340	159
BF340A	159
BF340B	159
BF340C	159
BF340D	159
BF341	341
BF341A	159
BF341B	159
BF341C	159
BF341D	159
BF342	159
BF342A	159
BF342B	159
BF342C	159
BF342D	159
BF343	159
BF344	161
BF345	161
BF348	133
BF355	154
BF357	108
BF362	161
BF363	161
BF364	229
BF365	229
BF368	128
BF377	278
BF378	278
BF379	159
BF385	108
BF387	128
BF394B	128
BF397	288
BF397A	288
BF398	288
BF398A	288
BF398B	288
BF411	194
BF412	194
BF414	159
BF422	399
BF440	123AP
BF441	123AP
BF450	290
BF451	159
BF456	171
BF457	171
BF458	171
BF459	157
BF494	229
BF494B	229
BF495	229
BF506	159
BF516	395
BF523	395
BF536	2401
BF540	159
BF541	288
BF542	288
BF594	108
BF595	108
BF596	123AP
BF597	199
BF709	395
BF819	198
BF820	2412
BF821	2413
BF822	2412
BF823	2413
BF824	2401
BF869	171
BF870	296
BF871	171
BF872	296
BF939	395
BF26235-5	117
BF-115	108
BF-180	123AP
BF-200(PENNCREST)	161
BF-214	123AP
BF-215	123AP
BF-226	123AP
BF-255	123AP
BF-422	399
BF-832	159
BFN16	2430
BFN17	2431
BFN18	2430
BFN19	2431
BFN21	2413
BFN22	2412
BFN23	2413
BFN24	2412
BFQ85	63
BFR11	123AP
BFR16	192
BFR18	171
BFR19	171
BFR20	171
BFR22	190
BFR25	199
BFR26	123AP
BFR28	108
BFR36	278
BFR38	395
BFR40	192
BFR40T05	192
BFR41	293
BFR41T05	293
BFR51	192
BFR52	293
BFR57	171
BFR58	171
BFR59	171
BFR61	193
BFR62	294
BFR80	193
BFR80T05	193
BFR81	294
BFR81T05	294
BFR90	65
BFR92	2402
BFR92A	2402
BFR92S	2402
BFR93	2402
BFR93A	2402
BFR93S	2402
BFR99	395
BFR99A	395
BFS11	161
BFS13E	107
BFS13F	107
BFS13G	107
BFS14A	159
BFS14B	159
BFS14C	159
BFS14D	159
BFS14E	107
BFS14F	107
BFS14G	107
BFS15E	107
BFS15F	107
BFS15G	107
BFS16	159
BFS16A	159
BFS16B	159
BFS16C	159
BFS16D	159
BFS16E	107
BFS16F	107
BFS16G	107
BFS17	108
BFS17R	108
BFS18	107
BFS18CA	161
BFS18R	107
BFS19	107
BFS19CB	123AP
BFS19R	107
BFS20	107
BFS20R	107
BFS21	133
BFS21A	133
BFS22	195A
BFS23	195A
BFS26	159
BFS26A	159
BFS26B	159
BFS26C	159
BFS26D	159
BFS26E	159
BFS26F	159
BFS26G	159
BFS27E	161
BFS27F	161
BFS27G	161
BFS28	221
BFS28R	221
BFS29	128
BFS29P	192
BFS30	192
BFS30P	192
BFS31	159
BFS31P	123AP
BFS32	159
BFS32P	159
BFS32PQR	159
BFS33	159
BFS33P	159
BFS34	193
BFS34P	159
BFS36	128
BFS36A	123AP
BFS36B	123AP
BFS36C	123AP
BFS37	159
BFS37A	159
BFS38	123AP
BFS38A	123AP
BFS39	192
BFS40	159
BFS40A	159
BFS41	159
BFS42	123AP
BFS42A	123AP
BFS42B	123AP
BFS42C	123AP
BFS43	123AP
BFS43A	123AP
BFS43B	123AP
BFS43C	123AP
BFS44	193
BFS45	193
BFS50	186
BFS51	186
BFS55A	199
BFS58	108
BFS59	192
BFS60	192
BFS62	108
BFS68	132
BFS68P	132
BFS69	159
BFS91A	298
BFS91B	298
BFS92	189
BFS93	189
BFS95	189
BFS96	193
BFS97	193
BFS99	171
BFT20	159
BFT21	294
BFT22	294
BFT29	128
BFT30	192
BFT31	293
BFT54	293
BFT55	199
BFT60	129
BFT61	129
BFT62	129
BFT70	193
BFT71	294
BFT79	129
BFT80	129
BFT81	129
BFT92	2403
BFT93	2403
BFT93A	2403
BFV10	123AP
BFV11	123AP
BFV12	123AP
BFV14	293
BFV20	159
BFV21	159
BFV22	159
BFV25	159
BFV26	159
BFV27	161
BFV28	161
BFV29	159
BFV30	159
BFV33	159
BFV34	159
BFV35	288
BFV36	288
BFV37	199
BFV38	199
BFV40	123AP
BFV41	123AP
BFV42	123AP
BFV43	123AP
BFV44	123AP
BFV45	123AP
BFV46	123AP
BFV47	123AP
BFV52	293
BFV53	123AP
BFV54	123AP
BFV55	123AP
BFV59	161
BFV60	161
BFV61	161
BFV62	199
BFV80	161
BFV82	159
BFV82A	159
BFV82B	159
BFV82C	159
BFV83	108
BFV83A	108
BFV83B	123AP
BFV83C	123AP
BFV85	123AP
BFV85A	123AP
BFV85B	123AP
BFV85C	123AP
BFV85D	108
BFV85E	108
BFV85F	108
BFV85G	108
BFV86	159
BFV86A	159
BFV86B	159
BFV86C	159
BFV87	123AP
BFV88	123AP
BFV88A	123AP
BFV88B	123AP
BFV88C	123AP
BFV89	199
BFV89A	199
BFW10	132
BFW11	132
BFW12	132
BFW13	133
BFW16	278
BFW16A	278
BFW17	278
BFW17A	278
BFW19	278
BFW20	193
BFW21	194
BFW22	234
BFW29	192
BFW30	278
BFW31	193
BFW32	123AP
BFW33	128
BFW37	154
BFW41	161
BFW43	288
BFW44	129
BFW45	154
BFW46	123AP
BFW47	278
BFW50	166
BFW54	132
BFW55	132
BFW56	132
BFW57	194
BFW58	194
BFW59	123AP
BFW60	123AP
BFW61	132
BFW63	161
BFW64	108
BFW68	123AP
BFW87	189
BFW88	189
BFW89	159
BFW90	159
BFW91	129
BFW92	316
BFW98	278
BFX12	106
BFX13	106
BFX17	128
BFX18	108
BFX19	108
BFX20	108
BFX21	108
BFX29	129
BFX30	129
BFX31	161
BFX32	107
BFX33	278
BFX34	154
BFX35	159
BFX37	234
BFX38	129
BFX39	129
BFX40	129
BFX41	129
BFX43	108
BFX44	108
BFX45	108
BFX47	161
BFX48	106
BFX50	128
BFX51	128
BFX52	128
BFX53	192
BFX55	186
BFX59	319P
BFX59F	192
BFX60	161
BFX61	128
BFX62	161
BFX65	159
BFX66	194
BFX68	128
BFX68A	128
BFX69	128
BFX69A	128
BFX73	161
BFX74	128
BFX74A	129
BFX77	161
BFX84	128
BFX85	128
BFX86	128
BFX87	129
BFX88	129
BFX89	161
BFX92	123AP
BFX92A	192
BFX93	123AP
BFX94	128
BFX95	128
BFX95A	123AP
BFX96	128
BFX96A	186
BFX97	128
BFX97A	293
BFX98	154
BFY	123AP
BFY10	128
BFY11	128
BFY12	128
BFY13	128
BFY14	128
BFY15	128
BFY16	192
BFY17	128
BFY18	129
BFY19	128
BFY22	123AP
BFY23	123AP
BFY23A	123AP
BFY24	123AP
BFY25	123AP
BFY26	123AP
BFY27	128
BFY28	123AP
BFY29	123AP
BFY30	123AP
BFY33	123AP
BFY34	128
BFY37	123AP
BFY37I	123AP
BFY39	123AP
BFY39-1	199
BFY39-2	199
BFY39-3	199
BFY39/1	123AP
BFY39/2	123AP
BFY39/3	123AP
BFY39/11	194
BFY39I	123AP
BFY40	128
BFY41	198
BFY43	154
BFY44	128
BFY45	154
BFY46	128
BFY47	107
BFY48	107
BFY49	107
BFY50	128
BFY51	128
BFY51(RTCF)	293
BFY52	128
BFY53	128
BFY55	128
BFY55(RTCF)	297
BFY56	128
BFY56A	128
BFY56B	297
BFY57	154
BFY63	123AP
BFY64	129
BFY65	154
BFY66	128
BFY67	128
BFY67A	128
BFY67C	128
BFY68	128
BFY68A	128
BFY69	107
BFY69A	107
BFY69B	161
BFY70	128
BFY72	123
BFY73	123AP
BFY74	123AP
BFY75	123AP
BFY76	123A
BFY77	123AP
BFY78	108
BFY79	161
BFY80	154
BFY81	81
BFY85	123A
BFY86	123A
BFY87	161
BFY87A	116
BFY88	278
BFY90	108
BFY90(SIEG)	123A
BFY90B	108
BFY94	159
BFY99	128
BFY167	161
BFY371	123AP
BFY391	123AP
BFY501	194
BFY-22	123AP
BFY-23	123AP
BFY-23A	123AP
BFY-24	123AP
BFY-29	123AP
BFY-30	123AP
BFY-37	108
BFY-39	123AP
BFY-47	108
BFY-48	108
BG71	123AP
BG-66	123AP
BG-94	123AP
BGP	123AP
BH4R1	116
BH4R6	156
BH71	123AP
BH-DX0038CEZZ	116
BI71	123AP
BI-82	159
BIP7201	123
BIR	247
BIW	123A
BJ1A	159
BJ1B	159
BJ1C	159
BJ2	159
BJ2A	159
BJ2B	159
BJ2C	159
BJ2D	159
BJ3	159
BJ3A	159
BJ3B	159
BJ4	159
BJ4A	159
BJ4B	159
BJ4C	159
BJ4D	159
BJ5	159
BJ5A	159
BJ5B	159
BJ6	159
BJ6A	159
BJ6B	159
BJ6C	159
BJ6D	159
BJ7	159
BJ7A	159
BJ7B	159
BJ7C	159
BJ7D	159
BJ8	159
BJ8A	159
BJ8B	159
BJ8C	159
BJ8D	159
BJ9	159
BJ9A	159
BJ9B	159
BJ9C	159
BJ9D	159
BJ10	159
BJ11	159
BJ11A	159
BJ11B	159
BJ12	159
BJ12B	159
BJ12C	159
BJ13	159
BJ13A	159
BJ13B	159
BJ14	159
BJ14A	159
BJ15	159
BJ56	159
BJ160	159
BJ161	159
BJ161A	159
BJ161B	159
BJ161C	159
BJ-155	614
BLX19	73
BLX20	73
BLX21	73
BLX25	70
BLX26	70
BLX27	70
BLX28	70
BLX29	70
BLX30	70
BLX65	278
BLX88	278
BLX89	278
BLY3	186
BLY10	130
BLY11	130
BLY12	130
BLY15	130
BLY15A	175
BLY20	186
BLY21	152
BLY27	192
BLY28	192
BLY33	278
BLY34	278
BLY35	152
BLY36	152
BLY37	186
BLY38	186
BLY47	130
BLY47A	175
BLY48	130
BLY48A	175
BLY49	162
BLY49A	175
BLY50	162
BLY53	186
BLY61	128
BLY62	186
BLY63	152
BLY78	186
BLY79	152
BLY88	152
BLY88A	325
BLY89	152
BLY91	186
BLY92	152
BLY93	192
BLY99	278
BMT1991	159
BMT2303	159
BMT2411	159
BMT2412	159
BN5111	1440
BN5111B	1440
BN5416	1683
BN5436N	1727
BN7133	130
BN7168	175
BN7214	130
BN7253	154

PART NUMBER	NTE REPLACEMENT
BN7517	123AP
BN7518	123AP
BN7551	142A
BN5111B	1440
BN-66	123AP
BO10Z	116
BO94	140A
BO102V	116
BO8875/2	159
BO311006	1087
BO311007	1087
BO311008	1087
BO316451	712
BO316541	712
BO319200	1155
BO347500	928M
BO470016	4001B
BO470932	4093B
BO-71	107
BP67	123AP
BP5263	160
BPS-S-50	519
BPW30	3036
BPX25A	3036
BPX38	3031
BPX43	3032
BPX59	3036
BPY62	3032
BQ67	123AP
BQ-94	123AP
BQA02-30A	5035A
BR32J01	5313
BR42	116
BR44	116
BR46	116
BR47	116
BR48	116
BR52	116
BR61	5312
BR61G	5312
BR62	5313
BR62G	5313
BR64	5314
BR64G	5314
BR66	5315
BR66G	5315
BR67	123AP
BR68	5316
BR68G	5316
BR78	316
BR81D	166
BR81G	5312
BR82D	167
BR82G	5313
BR84D	168
BR84G	5314
BR86D	169
BR86G	5315
BR88D	170
BR88G	5316
BR100	6408
BR100B	186
BR101B	152
BR251	5322
BR251G	5322
BR252	5322
BR252G	5322
BR254	5324
BR254G	5324
BR256	5326
BR256G	5326
BR258	5327
BR258G	5327
BR605	5312
BR605G	5312
BR610	5317
BR610G	5317
BR805D	166
BR805G	5312
BR810D	170
BR810G	5317
BR2505	5322
BR2505G	5322
BR2510	5328
BR2510G	5328
BR51400-1	116
BR51401-2	116
BR-1	166
BR-10S	506
BR-55	614
BR-66	123AP
BR-82	159
BR-100B	186
BR-101B	152
BR-832	159
BRA40	5314
BRC5296	152
BRC6109	197
BRC-116	130
BRC-5496	196
BRN-SPEC-24-12	519
BRX60	5412
BRX61	5413
BRX62	5414
BRX64	5415
BRX65	5416
BRX66	5416
BS08A	6403
BS08H	5651
BS1	116
BS2	116
BS6-01A	5673
BS6-02A	5673
BS6-03A	5675
BS6-04A	5675
BS7-02A	56004
BS7-04A	56006
BS7-05A	56008
BS7-06A	56008
BS8-01A	5673
BS8-02A	5673
BS8-03A	5673
BS8-04A	5675
BS10-01A	5673
BS10-02A	5673
BS10-03A	5675
BS10-04A	5675
BS67	123AP
BS475	123AP
BS9011G	123AP
BS74154	74154
BS-1	167
BS-66	123AP
BS-94	123AP
BS-B1	166
BS-B2	167
BS-B4	168
BSA01	177
BSA02	177
BSA11	177
BSR31	2429
BSR33	2429
BSR40	2428
BSR41	2428
BSR42	2428
BSR43	2428
BSS10	123AP
BSS13	278
BSS17	129
BSS18	129
BSS19	171
BSS20	171
BSS21	123AP
BSS22	123A
BSS23	192
BSS26	108
BSS28	278
BSS29	278
BSS30	224
BSS32	224
BSS33	198
BSS37	288
BSS38	194
BSS38(CBE)	287
BSS40	293
BSS41	293
BSS44	129
BSS68	288
BSS79	2408
BSS79C	2408
BST15	2431
BST16	2431
BST39	2430
BST40	2430
BST50	2426
BST51	2426
BST52	2426
BST60	2427
BST61	2427
BST62	2427
BSV15	129
BSV15-6	189
BSV15-10	189
BSV16	129
BSV16-6	189
BSV16-10	189
BSV17	189
BSV17-6	189
BSV17-10	189
BSV21	159
BSV21A	159
BSV35	108
BSV35A	123AP
BSV35B	108
BSV35C	108
BSV35D	108
BSV36	313
BSV40	123AP
BSV41	123AP
BSV42	159
BSV43A	159
BSV43B	193
BSV44A	159
BSV44B	193
BSV45A	159
BSV45B	193
BSV46	159
BSV47A	159
BSV47B	193
BSV48A	159
BSV48B	193
BSV49A	159
BSV49B	193
BSV51	128
BSV52	108
BSV52R	108
BSV53	123AP
BSV53P	107
BSV54	123AP
BSV54P	107
BSV55	123A
BSV55A	159
BSV55AP	159
BSV55P	159
BSV59	123AP
BSV60	186
BSV65FA	123AP
BSV65FB	123AP
BSV68	288
BSV69	192
BSV77	161
BSV82	129
BSV83	129
BSV84	123AP
BSV85	293
BSV86	123AP
BSV87	123AP
BSV88	123AP
BSV89	123AP
BSV90	123AP
BSV91	123AP
BSV92	229
BSV95	278
BSV96	159
BSV97	159
BSV98	159
BSW10	128
BSW11	123AP
BSW12	123AP
BSW13	161
BSW19	123AP
BSW19A	288
BSW19VI	288
BSW20	159
BSW20A	288
BSW20VI	288
BSW21	159
BSW21A	159
BSW22	159
BSW22A	159
BSW23	129
BSW24	159
BSW26	128
BSW27	128
BSW28	128
BSW29	128
BSW32	154
BSW33	123AP
BSW34	123AP
BSW35	128
BSW39	123AP
BSW39-10	128
BSW39-16	128
BSW40	129
BSW40-6	129
BSW40-10	129
BSW40-16	129
BSW40-25	129
BSW41	123AP
BSW42	123AP
BSW42A	123AP
BSW43	123AP
BSW43A	123AP
BSW44	159
BSW44A	159
BSW45	159
BSW45A	159
BSW49	293
BSW51	123AP
BSW52	123AP
BSW53	123AP
BSW58	123AP
BSW65	128
BSW66	128
BSW67	190
BSW68	190
BSW69	154
BSW70	154
BSW72	159
BSW73	159
BSW74	159
BSW75	159
BSW81	159
BSW82	123AP
BSW83	123AP
BSW84	123AP
BSW85	123AP
BSW88	123AP
BSW88A	123AP
BSW88B	123AP
BSW89	123AP
BSW89A	123AP
BSW89B	123AP
BSW92	123AP
BSW-21A	159
BSW-22	159
BSW-22A	159
BSW-24	159
BSW-44	159
BSW-44A	159
BSW-45	159
BSW-45A	159
BSW-68	198
BSW-72	159
BSW-73	159
BSW-74	159
BSW-75	159
BSX12	108
BSX12A	192
BSX19	123AP
BSX20	311
BSX21	123A
BSX22	128
BSX23	128
BSX24	123AP
BSX25	123AP
BSX26	108
BSX27	108
BSX28	108
BSX29	106
BSX30	123AP
BSX32	195A
BSX33	128
BSX35	108
BSX36	159
BSX38	123AP
BSX38A	123AP
BSX38B	123AP
BSX39	123AP
BSX40	129
BSX41	129
BSX44	123AP
BSX45	128
BSX45-6	128
BSX45-10	128
BSX45-16	128
BSX46	128
BSX46-6	128
BSX46-10	128
BSX46-16	128
BSX47	128
BSX47-6	128
BSX47-10	128
BSX48	123A
BSX49	123AP
BSX51	123AP
BSX51A	123AP
BSX52	123AP
BSX52A	123AP
BSX53	123AP
BSX54	123AP
BSX59	195A
BSX60	128
BSX61	128
BSX62	128
BSX62B	128
BSX62C	128
BSX62D	128
BSX63	128
BSX63B	128
BSX63C	128
BSX66	123AP
BSX67	123AP
BSX68	123AP
BSX69	123AP
BSX70	128
BSX71	128
BSX72	128
BSX75	123AP
BSX76	123AP
BSX77	123AP
BSX78	123AP
BSX79	123AP
BSX79A	123AP
BSX79B	123AP
BSX80	123AP
BSX81	123AP
BSX81A	123AP
BSX81B	123AP
BSX87	123AP
BSX87A	108
BSX88	108
BSX88A	108
BSX89	123AP
BSX90	123AP
BSX91	123AP
BSX92	108
BSX93	108
BSX94A	123AP
BSX95	128
BSX96	128
BSX97	123AP
BSY10	123
BSY11	123
BSY17	123AP
BSY18	123AP
BSY19	123AP
BSY20	123AP
BSY21	123AP
BSY22	108
BSY23	108
BSY24	123
BSY25	128
BSY26	123AP
BSY27	123AP
BSY28	123AP
BSY29	123AP
BSY34	123AP
BSY38	123AP
BSY39	123AP
BSY40	159
BSY41	159
BSY44	128
BSY45	128
BSY46	128
BSY48	123AP
BSY49	123AP
BSY51	123
BSY52	123
BSY53	123
BSY54	123
BSY55	128
BSY56	128
BSY58	123AP
BSY59	123AP
BSY61	123AP
BSY62	123AP
BSY62A	123AP
BSY62B	192
BSY63	123AP
BSY68	194
BSY70	108
BSY71	128
BSY72	108
BSY73	123AP
BSY74	123AP
BSY75	123AP
BSY76	123AP
BSY77	128
BSY78	128
BSY79	128
BSY80	123AP
BSY81	128
BSY82	128
BSY83	128
BSY84	128
BSY85	128
BSY86	128
BSY87	128
BSY88	128
BSY89	123AP
BSY90	128
BSY91	128
BSY92	128
BSY93	123AP
BSY95	123AP
BSY95A	123AP
BSY165	123AP
BSY168	123AP
BSY-40	159
BSY-41	159
BSY-62	108
BSY-72	108
BSY-73	108
BSY-74	108
BSY-80	108
BSY-95	108
BT67	123AP
BT71	123AP
BT82	159
BT100A-300R	5456
BT101-500R	5456
BT102-300R	5484
BT102-500R	5486
BT107	5486
BT108	5486
BT137-500	5645
BT137-500E	5645
BT137-500F	5645
BT137-500G	5645
BT137-600	5645
BT137-600E	5645
BT137-600F	5645
BT137-600G	5645
BT137F-500	5620
BT138-500	56008
BT138F-500	5671
BT138F-600	5671
BT138F-800	5671
BT139F-500	5671
BT139F-600	5671
BT139F-800	5671
BT151	5466
BT151-500R	5466
BT832	159
BT929	161
BT930	316
BT151500R	5456
BT-94	123AP
BTA06-200	5638
BTA06-200S	5638
BTA06-400	5638
BTA06-400S	5638
BTA08-200	5638
BTA08-200S	5638
BTA08-400	5638
BTA08-400S	5638
BTA10-200AW	5645
BTA10-200BW	5645
BTA10-200CW	5645
BTA10-400AW	5645
BTA10-400BW	5645
BTA10-400CW	5645
BTA10-600AW	5645
BTA10-600BW	5645
BTA10-600CW	5645
BTA12-200	5671
BTA12-200AW	5671
BTA12-200BW	5671
BTA12-400	5671
BTA12-400AW	5671
BTA12-400BW	5671
BTA12-600	5671
BTA12-600AW	5671
BTA12-600BW	5671
BTA12-700	5671
BTA12-700AW	5671
BTA12-700BW	5671
BTA12-800	5671
BTA12-800AW	5671
BTA12-800BW	5671
BTA16-200	5671
BTA16-200AW	5671
BTA16-200BW	5671
BTA16-400	5671
BTA16-400AW	5671
BTA16-400BW	5671
BTA16-600	5671
BTA16-600AW	5671
BTA16-600BW	5671
BTA16-700	5671
BTA16-700AW	5671
BTA16-700BW	5671
BTA16-800	5671
BTA16-800AW	5671
BTA16-800BW	5671
BTA25-200	56014
BTA25-200A	56014
BTA25-400	56014
BTA25-400A	56014
BTA26-200	56030
BTA26-400	56030
BTA26-400A	56014
BTA26-600	56031
BTA41-200	56030
BTA41-400	56030
BTA41-600	56031
BTB06-200B	5633
BTB06-200C	5633
BTB06-200S	5608
BTB06-400B	5635
BTB06-400C	5635
BTB06-400S	5608
BTB06-600B	5637
BTB06-600C	5637
BTB06-600S	5609
BTB06-700B	5610
BTB06-700C	5610
BTB06-700S	5610
BTB06-800S	5610
BTB08-200B	5633
BTB08-200C	5633
BTB08-200S	5608
BTB08-400B	5635
BTB08-400C	5635
BTB08-400S	5608
BTB08-600B	5637
BTB08-600C	5637
BTB08-600S	5609
BTB08-700C	5610
BTB08-700S	5610
BTB08-800S	5610
BTB10-200AW	5633
BTB10-200BW	5633
BTB10-400AW	5635
BTB10-400BW	5635
BTB10-600AW	5637
BTB10-600BW	5637
BTB10-600C	5637
BTB12-200AW	56004
BTB12-200BW	56004
BTB12-400AW	56006
BTB12-400BW	56006
BTB12-600AW	56008
BTB12-600BW	56008
BTB12-700AW	56010
BTB12-700BW	56010
BTB12-800AW	56010
BTB12-800BW	56010
BTB16-200AW	56004
BTB16-200BW	56004
BTB16-400AW	56006
BTB16-400BW	56006
BTB16-600AW	56008
BTB16-600BW	56008
BTB16-700AW	56010
BTB16-700BW	56010
BTB16-800AW	56010
BTB16-800BW	56010
BTB26-200	56033
BTB26-400	56033
BTB26-600	56033
BTB41-200	56033
BTB41-200A	56033
BTB41-200B	56033
BTB41-400	56033
BTB41-400A	56033
BTB41-400B	56033
BTB41-600	56033
BTB41-600A	56033
BTB41-600B	56033
BTB1000	156
BTD0105A	5640
BTD0110A	5640
BTD0120A	5641
BTD0130A	5642
BTD0140A	5642
BTD0150A	5643
BTD0160A	5643
BTD0205A	5640
BTD0210A	5640
BTD0220A	5641
BTD0230A	5642
BTD0240A	5642
BTD0250A	5643
BTD0260A	5643
BTD0305A	5631
BTD4L	6407
BTM50	116
BTM1000	156
BTM-50	5800
BTR0205A	5631
BTR0210	5632
BTR0210A	5632
BTR0220	5633
BTR0220A	5633
BTR0230	5634
BTR0230A	5634
BTR0240	5635
BTR0240A	5635
BTR0250	5636
BTR0250A	5636
BTR0260	5637
BTR0260A	5637
BTR0305	5631
BTR0310	5632
BTR0310A	5632
BTR0320	5633
BTR0320A	5633
BTR0330	5634
BTR0330A	5634
BTR0340	5635
BTR0340A	5635
BTR0350	5636
BTR0350A	5636
BTR0360	5637
BTR0360A	5637
BTR0505	5631
BTR0505A	5631
BTR0510	5632
BTR0510A	5632
BTR0520	5633
BTR0520A	5633
BTR0530	5634
BTR0530A	5634
BTR0540	5635
BTR0540A	5635
BTR0550	5636
BTR0550A	5636
BTR0560	5637
BTR0560A	5637
BTU0310	5673
BTU0320	5673
BTU0330	5675
BTU0340	5677
BTU0350	5677
BTU0360	5677
BTU0420A	5673
BTU0505	5673
BTU0510	5673
BTU0520	5673
BTU0530	5675
BTU0540	5675
BTU0550	5676
BTU0560	5676
BTU0605	5681
BTU0610	5682
BTU0620	5683
BTU0630	5684
BTU0640	5685
BTU0650	5687
BTU0535	5677
BTU650	5686
BTU1005	5673
BTU1010	5673
BTU1020	5673
BTU1040	5675
BTU1605	5673
BTU1610	5673
BTU1620	5673
BTU1640	5675
BTU3605	5697
BTV0405	56022
BTV0410	56022
BTV0420	56022
BTV0430	56024
BTV0440	56024
BTV0450	56026
BTV0460	56026
BTV24-600R	5568
BTV24-800R	5569
BTV24-1200R	5569
BTW40-400RU	5545
BTW40-600RU	5547
BTW40-800RU	5548
BTW45-400RU	5527
BTW45-600RU	5529
BTW45-800RU	5531
BTW48-200	5567
BTW48-400	5568
BTW48-600	5568
BTW48-800	5569
BTW48-1200	5569
BTW50-100	5567
BTW50-200	5567
BTW50-400	5568
BTW50-600	5568
BTW50-800	5569
BTW50-1000	5569
BTW50-1200	5569
BTW66-200	5534
BTW66-400	5534
BTW66-600	5534
BTW67-200	5534
BTW67-400	5534
BTW67-600	5534
BTW68-200N	5539
BTW68-300N	5539
BTW68-400N	5539
BTW68-600N	5540
BTW68-800N	5540
BTW69-200	5538
BTW69-200N	5539
BTW69-300	5538
BTW69-300N	5539
BTW69-400	5538
BTW69-400N	5539
BTW69-500	5538
BTW69-500N	5540
BTW69-600	5538
BTW69-600N	5540
BTW69-700	5538
BTW69-800	5538
BTW69-800N	5540
BTW92-800RU	5548
BTW16300	5675
BTX070	102A
BTX0505	56022
BTX0510	56022
BTX0520	56022
BTX0530	56024
BTX0550	56026
BTX0560	56026
BTX0605	56022
BTX0610	56022
BTX0620	56022
BTX0630	56024
BTX0640	56024

PART NUMBER	NTE REPLACEMENT
BTX0650	56026
BTX0660	56026
BTX068	123AP
BTX071	103A
BTX81-100R	5542
BTX81-300R	5544
BTX81-400R	5545
BTX81-500R	5546
BTX81-600R	5547
BTX94-200	5693
BTX94-400	5695
BTX94-400H	5685
BTX94-400J	5685
BTX94-600	5697
BTX94-600H	5687
BTX94-600J	5687
BTX2367B	123AP
BTX-070	123AP
BTX-068	199
BTX-071	129
BTX-084	234
BTX-094	123AP
BTX-095	123AP
BTX-096	123AP
BTX-097	129
BTX-2367B	123AP
BTY87-100R	5502
BTY87-200R	5504
BTY87-300R	5506
BTY87-400R	5507
BTY87-500R	5508
BTY87-600R	5529
BTY87-700R	5530
BTY87-800R	5531
BTY91-100R	5522
BTY91-200R	5524
BTY91-300R	5526
BTY91-400R	5527
BTY91-500R	5528
BTY91-600R	5529
BTY91-700R	5530
BTY91-800R	5531
BU029	117
BU67	123AP
BU71	123AP
BU102	163A
BU104	162
BU105	165
BU105-02	165
BU106	162
BU107	162
BU108	165
BU109	163A
BU110	162
BU111	163A
BU114	163A
BU115	165
BU120	162
BU121	283
BU122	283
BU123	283
BU126	163A
BU130	162
BU131	162
BU132	163A
BU133	163A
BU204	165
BU205	165
BU206	165
BU207	163A
BU208	165
BU208A	238
BU208D	89
BU209	165
BU210	283
BU211	283
BU212	283
BU225	165
BU310	163A
BU311	163A
BU312	163A
BU406	379
BU407	379
BU408	379
BU409	379
BU426	2310
BU426A	2310
BU505	2303
BU508	2300
BU508A	2300
BU508D	2318
BU508DF	2300
BU806	2315
BU807	2315
BU808	2315
BU920P	2316
BU921P	2316
BU922	98
BU922P	2316
BU930	98
BU931	98
BU931P	2317
BU931R	98
BU931RP	2317
BU932	98
BU932P	2317
BU932R	98
BU932RP	2317
BU4011B	4011B
BU4013B	4013B
BU4053B	4053B
BU4066B	4066B
BU4066BP	4066B
BUC97704-2	123AP
BUK456-800A	2387
BUK456-800B	2387
BUK457-500B	2385
BUL146	379
BUP21	2311
BUP21A	2311
BUP21B	2311
BUP21C	2311
BUP22	2311
BUP22A	2311
BUP22B	2311
BUP22C	2311
BUP23	2311
BUP23A	2311
BUP23B	2311
BUP23C	2311
BUS13	53
BUS21	2319
BUS21A	2319
BUS21B	2319
BUS21C	2319
BUS22	2319
BUS22A	2319
BUS22B	2319
BUS22C	2319
BUS23	2319
BUS23A	2319
BUS23B	2319
BUS23C	2319
BUT13P	256
BUV11	386
BUV11N	386
BUV20	387
BUV47	2311
BUV47A	2311
BUV48	2311
BUV48A	2311
BUV56	379
BUV82	2310
BUV83	2310
BUW11	2310
BUW11A	2310
BUW12	2310
BUW12A	2310
BUW13	2311
BUW13A	2311
BUW34	53
BUW35	53
BUW44	53
BUW45	53
BUW74	386
BUW75	386
BUW76	386
BUX11	327
BUX12	327
BUX13	386
BUX14	386
BUX16	283
BUX16A	283
BUX16B	283
BUX16C	283
BUX17	385
BUX17A	385
BUX17B	385
BUX17C	385
BUX18	162
BUX18A	162
BUX18B	162
BUX32	2311
BUX32A	2311
BUX32B	2311
BUX39	327
BUX40	327
BUX41	386
BUX41N	386
BUX42	386
BUX43	386
BUX47	2311
BUX47A	2311
BUX48	2319
BUX48A	385
BUX67	369
BUX67A	369
BUX67B	369
BUX67C	369
BUX81	386
BUX82	283
BUX83	283
BUX84	2313
BUX85	2313
BUX86	2327
BUX87	2327
BUX97	386
BUX97A	386
BUX97B	386
BUY10	130
BUY11	130
BUY12	162
BUY13	162
BUY14	182
BUY18S	283
BUY20	162
BUY21	162
BUY21A	162
BUY22	162
BUY24	152
BUY35	162
BUY38	175
BUY43	181
BUY44	162
BUY46	181
BUY55	162
BUY55-4	162
BUY55-10	162
BUY56	162
BUY56-4	162
BUY56-6	162
BUY56-10	162
BUY69	283
BUY69A	283
BUY69B	283
BUY69C	283
BUY70A	283
BUY70B	283
BUY70C	283
BUY71	62
BUY72	162
BUY72-4	162
BUY72-6	162
BUY72-10	162
BUZ14	2392
BUZ17	2392
BUZ24	2392
BUZ25	2392
BUZ31	2388
BUZ32	2388
BUZ32A	2388
BUZ32B	2388
BUZ32C	2388
BUZ40	2380
BUZ42	2380
BUZ44	2386
BUZ44A	2386
BUZ63	2386
BUZ63B	2386
BUZ71	66
BUZ71A	66
BUZ72	66
BUZ72A	66
BUZ73A	2388
BUZ74A	2380
BUZ84	2384
BUZ84A	2384
BV25	116
BV67	123AP
BV71	123AP
BVX40-1000R	5891
BVX48-600	5882
BVX48/600	5882
BW67	123AP
BW71	123AP
BWS66	198
BWS67	198
BX090	139A
BX67	123AP
BX71	123AP
BX495(SONY)	158
BX909	139A
BX-324	158
BX-495	158
BXY10	125
BXY63	139A
BXY79C10	519
BY0331	580
BY67	123AP
BY71	123AP
BY100	125
BY100S	125
BY101	116
BY102	116
BY103	506
BY104	125
BY105	125
BY106	116
BY107	116
BY108	125
BY109	125
BY111	116
BY112	116
BY113	116
BY114	5806
BY115	116
BY116	116
BY117	116
BY118	125
BY119	125
BY121	116
BY122	166
BY123	167
BY124	116
BY125	116
BY126	5808
BY126/50	156
BY126/100	156
BY126/200	156
BY126/300	156
BY126/400	156
BY127	5809
BY127/500	125
BY127/600	125
BY127/700	125
BY128	125
BY129	125
BY130	116
BY133	506
BY134	116
BY135	116
BY141	116
BY153	116
BY156	156
BY157	506
BY158	506
BY164	166
BY172	156
BY173	156
BY179	170
BY201	5830
BY201-2	5832
BY202	5832
BY203	5834
BY203/16	525
BY203/20	525
BY204	5836
BY205	5838
BY206	5840
BY207	552
BY208	5846
BY208/600	558
BY208/1000	558
BY209	5846
BY211	5830
BY212	5832
BY213	5834
BY214	5836
BY214-50	5812
BY214-100	5812
BY214-200	5814
BY214-400	5814
BY214-600	5815
BY214-800	5817
BY214-1000	5817
BY215	5038A
BY216	5840
BY217	5842
BY218	5846
BY219	5846
BY221	5830
BY222	5832
BY226	5840
BY227	5842
BY229	581
BY229-200	581
BY229-400	581
BY251	5802
BY252	5804
BY253	5806
BY254	5808
BY296	580
BY298	580
BY301	5830
BY302	5832
BY303	5834
BY304	5836
BY305	5838
BY306	5840
BY307	5842
BY308	5846
BY309	5846
BY311	5830
BY312	5832
BY313	5834
BY314	5836
BY315	5838
BY316	5840
BY317	5842
BY318	5846
BY319	5846
BY321	5830
BY322	5832
BY323	5834
BY324	5836
BY325	5858
BY326	5840
BY327	5842
BY328	5846
BY396	580
BY397	580
BY401	5850
BY402	5852
BY403	5854
BY404	5856
BY405	5858
BY406	5860
BY406A	5860
BY407	5862
BY407A	5860
BY408	5866
BY409	5866
BY411	5850
BY412	5852
BY413	5854
BY414	5856
BY415	5858
BY416	5860
BY417	5862
BY418	5866
BY419	5866
BY421	5850
BY422	5852
BY423	5854
BY424	5856
BY425	5858
BY426	5860
BY427	5862
BY428	5866
BY429	5866
BY488	5874
BY501	5870
BY502	5872
BY503	5874
BY504	5876
BY505	5878
BY506	5880
BY507	5882
BY508	5886
BY509	5886
BY511	5870
BY512	5872
BY513	5874
BY514	5876
BY515	5878
BY516	5880
BY517	5882
BY518	5886
BY519	5886
BY521	5870
BY522	5872
BY523	5874
BY524	5876
BY525	5878
BY526	5880
BY527	5882
BY528	5886
BY529	5886
BY701	5850
BY702	5852
BY703	5854
BY704	5856
BY705	5858
BY706	5860
BY707	5862
BY708	5866
BY709	5866
BY711	5850
BY712	5852
BY713	5854
BY714	5856
BY715	5858
BY716	5860
BY717	5862
BY718	5866
BY719	5866
BY721	5850
BY722	5852
BY723	5854
BY724	5856
BY725	5858
BY726	5860
BY727	5862
BY728	5866
BY729	5866
BY801	5870
BY802	5872
BY803	5874
BY804	5876
BY805	5878
BY806	5880
BY807	5882
BY808	5886
BY809	5886
BY811	5870
BY812	5872
BY813	5874
BY814	5876
BY815	5878
BY816	5880
BY818	5886
BY819	5886
BY821	5870
BY822	5872
BY823	5874
BY824	5876
BY825	5878
BY826	5880
BY827	5882
BY828	5886
BY829	5886
BY1001	125
BY1002	125
BY1101	125
BY1102	125
BY1200	125
BY1201	125
BY1202	125
BY2001	5848
BY2002	5848
BY2101	5848
BY2102	5848
BY2201	5848
BY2202	5848
BY3001	5848
BY3002	5848
BY3101	5848
BY3102	5848
BY3201	5848
BY3202	5848
BY4001	5868
BY4002	5868
BY4101	5868
BY4102	5868
BY4201	5868
BY4202	5868
BY5001	5890
BY5002	5890
BY5101	5890
BY5102	5890
BY5201	5890
BY5202	5890
BY7001	5868
BY7002	5868
BY7101	5868
BY7102	5868
BY7201	5868
BY7202	5868
BY8001	5890
BY8002	5890
BY8101	5890
BY8102	5890
BY8201	5890
BY8202	5890
BY-127	116
BY-208-1000	558
BYD14K	125
BYD33D	552
BYD33G	552
BYD33J	580
BYP20-50	6240
BYP20-100	6240
BYP20-150	6240
BYR28-500	6241
BYR28-600	6241
BYT03-200	588
BYT16P-200	6240
BYT16P-300	6241
BYT16P-400	6241
BYT28-300	6241
BYT28-400	6241
BYT28-500	6241
BYT95A	580
BYV10-20	585
BYV10-20A	585
BYV10-30	585
BYV10-40	585
BYV20-30	6084
BYV20-35	6084
BYV20-40	6084
BYV20-45	6084
BYV21-30	6084
BYV21-35	6084
BYV21-40	6084
BYV21-45	6084
BYV26A	587
BYV27	588
BYV27-50	588
BYV27-100	588
BYV27-150	588
BYV27-200	588
BYV28	588
BYV28-50	588
BYV28-100	588
BYV28-150	588
BYV28-200	588
BYV29-500	598
BYV32-50	6240
BYV32-100	6240
BYV32-150	6240
BYV32-200	6240
BYV33J	580
BYV72-50	6246
BYV72-100	6246
BYV72-150	6246
BYV72-200	6246
BYV72F-50	6246
BYV72F-100	6246
BYV72F-150	6246
BYV72F-200	6246
BYV74-300	6247
BYV74-400	6247
BYV74-500	6247
BYV74F-300	6247
BYV74F-400	6247
BYV74F-500	6247
BYV92-200	6006
BYV92-300	6008
BYV92-400R	6009
BYV95B	580
BYV95C	580
BYVF74-400	6247
BYW76	116
BYW88-50	5870
BYW88-50R	5871
BYW88-100	5872
BYW88-100R	5873
BYW88-200	5874
BYW88-200R	5875
BYW88-300	5876
BYW88-300R	5877
BYW88-400	5878
BYW88-400R	5879
BYW88-500	5880
BYW88-500R	5881
BYW88-600	5882
BYW88-600R	5883
BYW88-800	5886
BYW88-800R	5887
BYW88-1000	5890
BYW88-1000R	5891
BYW95B	580
BYW95C	580
BYW98-50	588
BYW98-100	588
BYW98-150	588
BYW98-200	588
BYW99-50	6246
BYW99-100	6246
BYW99-150	6246
BYW99-200	6246
BYW99-300	6247
BYW99-400	6247
BYW99-500	6247
BYW99-600	6247
BYW100-50	588
BYW100-100	588
BYW100-150	588
BYW100-200	588
BYX4-1000R	5891
BYX10	125
BYX12/400	125
BYX13/600	125
BYX13/1000	5999
BYX15	5999
BYX16	5998
BYX22-1200	506
BYX22/200	116
BYX22/400	116
BYX22/600	116
BYX22/800	125
BYX25-600	5924
BYX25-600R	5925
BYX25-800	5928
BYX25-800R	5929
BYX25-1000	5932
BYX25-1000R	5933
BYX26-60	156
BYX28/600	5842
BYX30/150	5802
BYX36-150	156
BYX36-300	116
BYX36-600	116
BYX36/150	116
BYX36/300	116
BYX36/600	116
BYX38	156
BYX38-300	5898
BYX38-300R	5899
BYX38-600	5904
BYX38-600R	5905
BYX38-900	5910
BYX38-900R	5911
BYX38/300	5836
BYX38/300R	5899
BYX38/600	5842
BYX38/600R	5839
BYX38/900	5848
BYX38/900R	5843
BYX38/1200	5846
BYX38/1200R	5847
BYX39-600	5862
BYX39-600R	5863
BYX39-800	5866
BYX39-800R	5867
BYX39-1000	5868
BYX39-1000R	5869
BYX39/600	5882
BYX39/800	5886
BYX39/1000	5890
BYX40-600	5882
BYX40-600R	5883
BYX40-800	5886
BYX40-800R	5887
BYX40-1000	5890
BYX40-1000R	5891
BYX40-8000R	5887
BYX42-300	5876
BYX42-300R	5877
BYX42-600	5882
BYX42-600R	5883
BYX42-900	5890
BYX42-900R	5891
BYX42/300	5878
BYX42/600	5882
BYX42/900	5890
BYX45-600R	156
BYX45-800R	156
BYX45-1000R	156
BYX46-200	5896
BYX46-200R	5897
BYX46-300	5898
BYX46-300R	5899
BYX46-400	5900
BYX46-400R	5901
BYX46-500	5902
BYX46-500R	5903
BYX46-600	5904
BYX46-600R	5905
BYX48-300	5876
BYX48-600	5882
BYX48-600R	5863
BYX48-900	5890
BYX48-900R	5869
BYX48/300	5878
BYX48/600	5882
BYX48/900	5890
BYX50-200	5854
BYX50-200R	5855
BYX50-300	5856
BYX50-400	5858
BYX50-400R	5859
BYX50-500	5860
BYX50-500R	5861
BYX50-600	5862
BYX50-600R	5863
BYX51-100	5894
BYX52-300	5988
BYX52-300R	5989
BYX52-600	5994
BYX52-600R	5995
BYX52-900	6002
BYX52-900R	6003
BYX56-600	5994
BYX56-600R	5995
BYX56-800	5998
BYX56-800R	5999
BYX56-1000	6002
BYX56-1000R	6003
BYX57-500	506
BYX57-600	506
BYX58-50	177
BYX58-100	177
BYX58-200	177
BYX60-50	116
BYX60-100	116
BYX60-200	116
BYX60-300	116
BYX60-400	116
BYX60-500	116
BYX60-600	116
BYX60-700	125
BYX61-50	5892
BYX61-100	5894
BYX61-300	5898
BYX61-400	5900

PART NUMBER	NTE REPLACEMENT
BYX62-600	5904
BYX63-600	6010
BYX63-600R	6011
BYX64-600	6010
BYX64-600R	6011
BYX65-50	6006
BYX65-50R	6007
BYX65-100	6006
BYX65-100R	6007
BYX65-200	6006
BYX65-200R	6007
BYX65-300	6008
BYX65-300R	6009
BYX65-400	6008
BYX65-400R	6009
BYX66-400	5900
BYX66-600	5904
BYX66-800	5908
BYX66-1000	5910
BYX67-500	6010
BYX67-500R	6011
BYX67-600	6010
BYX67-600R	6011
BYX38900	5882
BYX39600	5882
BYX40600	5882
BYX42600	5882
BYX48600	5882
BYX55009	125
BYY31	116
BYY32	116
BYY33	116
BYY34	116
BYY35	116
BYY36	116
BYY37	125
BYY57-500	5827
BYY57/500	5827
BYY57/500-E	5827
BYY58-500	5826
BYY58/500	5826
BYY58/500-E	5826
BYY60	156
BYY61	156
BYY88	5874
BYY89	116
BYY91	125
BYY-31	116
BYY-32	116
BYY-35	116
BYZ13	5944
BYZ83-C9V1	5018A
BZ050	135A
BZ060	5012A
BZ080	5072A
BZ090	139A
BZ090.1Z9	139A
BZ052	136A
BZ058	5070A
BZ066	5071A
BZ071	138A
BZ075	138A
BZ081	5072A
BZ085	5072A
BZ094	139A
BZ1-9	139A
BZ1-90	139A
BZ3.6	134A
BZ3.9	134A
BZ4.3	5008A
BZ4.7	135A
BZ5.1	135A
BZ5.6	136A
BZ6.2	136A
BZ6.8	5014A
BZ7.5	5015A
BZ8.2	5016A
BZ9.1	139A
BZ67	123AP
BZ71	123AP
BZ79C10	140A
BZ88/C4V7	136A
BZ100	140A
BZ102-2V8	5003A
BZ102-3V4	5005A
BZ110	5074A
BZ120	142A
BZ130	143A
BZ140	144A
BZ150	145A
BZ162	5075A
BZ170	5076A
BZ177	5077A
BZ182	5077A
BZ190	5078A
BZ192	5078A
BZ197	5079A
BZ210	5079A
BZ230	5080A
BZ240	5081A
BZ260	146A
BZ270	146A
BZ290	5084A
BZ300	5084A
BZ310	5084A
BZ320	147A
BZ350	5085A
BZ360	5085A
BZ804D	552
BZ1021V4	177
BZ-0900	139A
BZ-0800	5072A
BZ-050	135A
BZ-080	139A

PART NUMBER	NTE REPLACEMENT
BZ-090	139A
BZ-090(DIODE)	109
BZ-090(ZENER)	139A
BZ-0901	139A
BZ-052	136A
BZ-054	136A
BZ-056	136A
BZ-058	5070A
BZ-061	137A
BZ-063	137A
BZ-065	5071A
BZ-067	5071A
BZ-069	5071A
BZ-071	138A
BZ-073	138A
BZ-075	138A
BZ-077	5072A
BZ-079	5072A
BZ-081	5072A
BZ-083	5072A
BZ-085	5073A
BZ-088	5073A
BZ-092	139A
BZ-094	139A
BZ-096	140A
BZ-098	140A
BZ-12	142A
BZ-100	140A
BZ-105	5074A
BZ-110	5074A
BZ-115	141A
BZ-120	142A
BZ-125	143A
BZ-130	143A
BZ-135	144A
BZ-140	144A
BZ-140LF	144A
BZ-145	145A
BZ-150	145A
BZ-157	5075A
BZ-162	5075A
BZ-167	5076A
BZ-172	5076A
BZ-177	5077A
BZ-182	5077A
BZ-187	5078A
BZ-192	5078A
BZ-197	5079A
BZ-210	5079A
BZ-220	5080A
BZ-230	5081A
BZ-240	5081A
BZ-250	5082A
BZ-260	146A
BZ-270	146A
BZ-280	5083A
BZ-290	5084A
BZ-300	5084A
BZ-310	147A
BZ-320	147A
BZ-320LF	147A
BZ-330	147A
BZ-340	5085A
BZ-350	5085A
BZ-X19	145A
BZ/88/C4V7	135A
BZS2.7	5002A
BZS3.3	5005A
BZV85C51	5089A
BZX10	137A
BZX14	139A
BZX17	142A
BZX19	145A
BZX25	146A
BZX25A	146A
BZX27	147A
BZX29C4V7	5069A
BZX29C5V1	135A
BZX29C5V6	136A
BZX29C6V2	137A
BZX29C6V8	5071A
BZX29C7V5	138A
BZX29C8V2	5072A
BZX29C9V1	139A
BZX29C10	140A
BZX29C11	5074A
BZX29C12	142A
BZX29C13	143A
BZX29C15	145A
BZX29C16	5075A
BZX29C18	5077A
BZX29C20	5079A
BZX29C22	5080A
BZX29C24	5081A
BZX29C27	146A
BZX29C30	5084A
BZX29C33	147A
BZX29C36	5085A
BZX29C39	5086A
BZX29C43	5087A
BZX29C47	5088A
BZX29C51	5089A
BZX29C56	5090A
BZX29C62	149A
BZX29C82	150A
BZX46C2V7	5002A
BZX46C3V0	5004A
BZX46C3V3	5005A

PART NUMBER	NTE REPLACEMENT
BZX46C6V2	137A
BZX46C6V8	5014A
BZX46C7V5	5015A
BZX46C8V2	5016A
BZX46C9V1	139A
BZX46C10	5019A
BZX46C11	5020A
BZX46C12	5021A
BZX46C13	5022A
BZX46C15	5024A
BZX46C16	5025A
BZX46C18	5027A
BZX46C20	5029A
BZX46C22	5030A
BZX46C24	5031A
BZX46C27	5033A
BZX46C30	5035A
BZX46C33	5036A
BZX46C36	5037A
BZX46C39	5038A
BZX46C43	5039A
BZX46C47	5040A
BZX55C2V4	5000A
BZX55C2V7	5002A
BZX55C3V	5004A
BZX55C3V0	5004A
BZX55C3V3	5005A
BZX55C3V6	5006A
BZX55C3V9	5007A
BZX55C4V3	5008A
BZX55C4V7	5009A
BZX55C5V1	5010A
BZX55C5V6	5011A
BZX55C6V2	5013A
BZX55C6V8	5014A
BZX55C7V5	5015A
BZX55C8V2	5016A
BZX55C9V1	5018A
BZX55C10	5019A
BZX55C11	5020A
BZX55C12	5021A
BZX55C13	5022A
BZX55C15	5024A
BZX55C16	5025A
BZX55C18	5027A
BZX55C20	5029A
BZX55C22	5030A
BZX55C24	5031A
BZX55C27	5033A
BZX55C30	5035A
BZX55C33	5036A
BZX55C36	5037A
BZX55C39	5039A
BZX55C43	5043A
BZX55D5V6	5117A
BZX55D6V8	5120A
BZX55D8V1	5124A
BZX55D8V2	5122A
BZX55D10	5125A
BZX60C36	5085A
BZX61-C36	5143A
BZX70C7V5	5121A
BZX70C8V2	5122A
BZX70C9V1	5124A
BZX70C10	5125A
BZX70C11	5126A
BZX70C12	5127A
BZX70C18	5133A
BZX70C22	5136A
BZX70C24	5137A
BZX70C27	5139A
BZX70C30	5141A
BZX70C33	5142A
BZX70C36	5143A
BZX70C39	5144A
BZX70C43	5145A
BZX70C47	5146A
BZX70C51	5147A
BZX70C56	5148A
BZX70C62	5150A
BZX70C68	5151A
BZX70C75	5152A
BZX71C5V1	5010A
BZX71C5V6	5011A
BZX71C6V2	5013A
BZX71C6V8	5014A
BZX71C7V5	5015A
BZX71C8V2	5016A
BZX71C9V1	139A
BZX71C9V2	5018A
BZX71C10	5019A
BZX71C11	5020A
BZX71C12	5021A
BZX71C13	5022A
BZX71C15	5024A
BZX71C16	5025A
BZX71C18	5027A
BZX71C20	5029A
BZX71C22	5030A
BZX71C24	5031A
BZX72	5018A
BZX72A	5002A
BZX72B	5018A
BZX72C	5018A
BZX75C2V8	5003A
BZX75C3V6	5006A
BZX79	5011A
BZX79-C7V5	138A
BZX79-C7VS	5015A
BZX79-C12	5021A
BZX79/C4V7	5009A
BZX79/C6.8	5071A
BZX79/C6V2	5013A
BZX79/C12	5021A

PART NUMBER	NTE REPLACEMENT
BZX79/C13	5022A
BZX79/C16	5025A
BZX79/C18	5077A
BZX79/C24	5081A
BZX79/C30	5035A
BZY79B5V1	5010T1
BZY79B5V6	5011T1
BZY79B6V2	5013T1
BZY79B6V8	5014A
BZY79B6VB	5014A
BZY79B10	5019T1
BZY79B12	5021T1
BZY79C2V4	5000A
BZY79C2V7	5002A
BZY79C3V	5004A
BZY79C3V0	5004A
BZY79C3V3	5005A
BZY79C3V6	5006A
BZY79C3V9	5007A
BZY79C4V3	5008A
BZY79C4V7	5009A
BZY79C5V1	5010A
BZY79C5V6	5011A
BZY79C6V2	5013A
BZY79C6V8	5014A
BZY79C7V5	5015A
BZY79C8V2	5016A
BZY79C9V1	5018A
BZY79C9V8	5071A
BZY79C10	5019A
BZY79C10V	5019A
BZY79C11	5020A
BZY79C11V	5020A
BZY79C12	5021A
BZY79C12V	5012A
BZY79C13	5022A
BZY79C15	5024A
BZY79C15V	5024A
BZY79C16	5025A
BZY79C16V	5025A
BZY79C18	5027A
BZY79C18V	5027A
BZY79C20	5029A
BZY79C20V	5029A
BZY79C22	5030A
BZY79C22V	5030A
BZY79C24	5031A
BZY79C24V	5031A
BZY79C27	5033A
BZY79C27A	146A
BZY79C27V	5033A
BZY79C30	5035A
BZY79C30V	5035A
BZY79C33	5036A
BZY79C33V	5036A
BZY79C36	5037A
BZY79C39	5038A
BZY79C43	5039A
BZY79C47	5040A
BZY79C51	5041A
BZY79C56	5042A
BZY79C62	5044A
BZY79C68	5045A
BZY79C75	5046A
BZY79D5V1	5010A
BZX83C2V4	5000A
BZX83C2V7	5002A
BZX83C3V0	5004A
BZX83C3V3	5005A
BZX83C3V6	5006A
BZX83C3V9	5007A
BZX83C4V3	5008A
BZX83C4V7	5009A
BZX83C5V1	5010A
BZX83C5V6	5011A
BZX83C6V2	5012A
BZX83C6V8	5014A
BZX83C7V5	5015A
BZX83C8V2	5016A
BZX83C9V1	5018A
BZX83C10	5019A
BZX83C11	5020A
BZX83C12	5021A
BZX83C13	5022A
BZX83C15	5024A
BZX83C16	5025A
BZX83C18	5027A
BZX83C20	5029A
BZX83C22	5030A
BZX83C24	5031A
BZX83C27	5033A
BZX83C30	5035A
BZX83C33	5036A
BZX83C36	5037A
BZX83C39	5038A
BZX83C43	5039A
BZX83C68	5045A
BZX83C75	5046A
BZX85C3V6	5006A
BZX85C4V3	5068A
BZX85C43	5087A
BZX88C2V7	5002A
BZX88C27	5033A
BZX88C33	5036A
BZX94C62	149A
BZX95C4V7	5009A
BZY95C5V1	5010A
BZY95C5V6	5011A
BZX95C6V2	5013A
BZX95C6V8	5014A
BZX95C7V5	5015A
BZX95C8V2	5016A
BZX95C9V1	5018A
BZY95C10	5019A

PART NUMBER	NTE REPLACEMENT
BZX95C11	5020A
BZX95C12	5012A
BZX95C13	5022A
BZX95C15	5024A
BZX95C16	5025A
BZX95C18	5027A
BZX95C20	5029A
BZX95C22	5030A
BZX95C24	5031A
BZX95C27	5033A
BZX95C30	5035A
BZX95C33	5036A
BZX95C36	5037A
BZX96C3V3	5066A
BZX96C3V6	5006A
BZX96C3V9	5007A
BZX96C4V3	5008A
BZX96C4V7	5009A
BZX96C5V1	5010A
BZX97-C2V7	5002A
BZX97-C4V3	5008A
BZX97-C4V7	5009A
BZX97-C5V1	5010A
BZX97-C6V8	5014A
BZX97-C11	5020A
BZX97-C12	5021A
BZX97-C13	5022A
BZX97-C15	5024A
BZX97-C16	5025A
BZX97-C18	5027A
BZX97-C20	5029A
BZX97-C27	5033A
BZX97-C51	5041A
BZX97C2V4	5000A
BZX97C2V7	5002A
BZX97C3V3	5005A
BZX97C3V6	5006A
BZX97C3V9	5007A
BZX97C4V3	5008A
BZX97C4V7	5009A
BZX97C5V1	5010A
BZX97C5V6	5011A
BZX97C6V2	5013A
BZX97C6V8	5014A
BZX97C7V5	5015A
BZX97C8V2	5016A
BZX97C9V1	5018A
BZX97C10	5019A
BZX97C11	5020A
BZX97C12	5021A
BZX97C13	5022A
BZX97C15	5024A
BZX97C16	5025A
BZX97C18	5027A
BZX97C20	5029A
BZX97C22	5030A
BZX97C24	5031A
BZX97C27	5033A
BZX97C30	5035A
BZX97C33	5036A
BZX97C36	5037A
BZX97C39	5038A
BZX97C43	5039A
BZX97C47	5040A
BZX707C7V5	5121A
BZX5565V1	5010A
BZX-46C15	145A
BZX-71C15	145A
BZX-79C15	145A
BZY18	142A
BZY19	142A
BZY29C33	147A
BZY56	5009A
BZY57	5010A
BZY58	5011A
BZY59	5013A
BZY60	5014A
BZY61	5015A
BZY62	5016A
BZY63	5018A
BZY64	5008A
BZY65	5010A
BZY66	5013A
BZY67	5015A
BZY68	5018A
BZY69	5021A
BZY74	5180A
BZY75	5182A
BZY76	5185A
BZY78	5011A
BZY78P	5011A
BZY83/C5V1	135A
BZY83/C5V6	136A
BZY83/C10	140A
BZY83/C15	145A
BZY83/C16	145A
BZY83/CV51	135A
BZY83/D5V6	136A
BZY83/D10	140A
BZY83/D15	145A
BZY83C4V7	5009A
BZY83C5V1	5010A
BZY83C5V6	5011A
BZY83C6V2	5013A
BZY83C6V8	5014A
BZY83C7V5	5015A
BZY83C8V2	5016A
BZY83C9V1	5018A
BZY83C10	5019A
BZY83C11	5020A
BZY83C12	5021A
BZY83C13V5	5022A
BZY83C15	5024A
BZY83C16	145A

PART NUMBER	NTE REPLACEMENT
BZY83C16V5	5026A
BZY83C18	5027A
BZY83C20	5029A
BZY83C22	5030A
BZY83C24V5	5032A
BZY83D4V7	5009A
BZY83D5V6	5011A
BZY83D6V8	5014A
BZY83D8V2	5016A
BZY83D10	5019A
BZY83D12	5021A
BZY83D15	5024A
BZY83D18	5027A
BZY83D22	5030A
BZY84D5V6	5178A
BZY84D6V8	5181A
BZY84D8V2	5183A
BZY84D10	5185A
BZY84D12	5188A
BZY85/C3V6	134A
BZY85/C5V1	135A
BZY85/C5V6	136A
BZY85/C10	140A
BZY85/C15	145A
BZY85/C27	146A
BZY85/D5V6	136A
BZY85/D10	140A
BZY85/D15	145A
BZY85B2V7	5002A
BZY85B3V3	5005A
BZY85C2V7	5002A
BZY85C3	5004A
BZY85C3V3	5005A
BZY85C3V6	5006A
BZY85C3V9	5007A
BZY85C4V3	5008A
BZY85C4V7	5009A
BZY85C5V1	5010A
BZY85C5V6	5011A
BZY85C6V2	5013A
BZY85C6V8	5014A
BZY85C7V5	5015A
BZY85C8V2	5016A
BZY85C9V1	5018A
BZY85C10	5019A
BZY85C11	5020A
BZY85C12	5021A
BZY85C13	5022A
BZY85C13V5	5023A
BZY85C15	5024A
BZY85C16	5025A
BZY85C16V5	5026A
BZY85C18	5027A
BZY85C20	5029A
BZY85C22	5030A
BZY85C24	5031A
BZY85C24V5	5032A
BZY85C27	5033A
BZY85C30	5035A
BZY85C33	5036A
BZY85D4V7	5009A
BZY85D5V6	5011A
BZY85D6V8	5014A
BZY85D8V2	5016A
BZY85D10	5019A
BZY85D12	5021A
BZY85D15	5024A
BZY85D18	5027A
BZY85D22	5030A
BZY88	5021A
BZY88-C4V7	5009A
BZY88-C6V8	5014A
BZY88-C10	5019A
BZY88-C15	5024A
BZY88/6V2	137A
BZY88/C4V7	136A
BZY88/C5V1	135A
BZY88/C5V6	136A
BZY88/C6V2	137A
BZY88/C9V1	139A
BZY88/C9V5	139A
BZY88/C9V7	135A
BZY88C3V3	5005A
BZY88C3V6	5006A
BZY88C3V9	5007A
BZY88C4V3	5008A
BZY88C4V7	5009A
BZY88C5V1	5010A
BZY88C5V6	5011A
BZY88C6V2	5012A
BZY88C6V8	5014A
BZY88C7V5	5015A
BZY88C8V2	5016A
BZY88C9V1	5018A
BZY88C10	5019A
BZY88C11	5020A
BZY88C12	5021A
BZY88C13	5022A
BZY88C15	5024A
BZY88C16	5025A
BZY88C18	5027A
BZY88C20	5029A
BZY88C22	5030A
BZY88C24	5031A
BZY88C27	5033A
BZY88C30	5035A
BZY88C33	5036A
BZY92/C5V1	135A
BZY92/C5V6	136A
BZY92/C15	145A
BZY92/C27	146A
BZY92C3V9	5067A
BZY92C4V3	5068A
BZY92C4V7	5069A

PART NUMBER	NTE REPLACEMENT
BZY92C5V1	135A
BZY92C5V6	136A
BZY92C6V2	137A
BZY92C6V8	5071A
BZY92C7V5	138A
BZY92C8V2	5072A
BZY92C9V1	139A
BZY92C10	140A
BZY92C11	5074A
BZY92C12	142A
BZY92C13	143A
BZY92C15	145A
BZY92C16	5075A
BZY92C18	5077A
BZY92C20	5079A
BZY92C22	5080A
BZY92C24	5081A
BZY92C27	146A
BZY92C30	5084A
BZY92C33	147A
BZY92C36	5085A
BZY93C6V8	5147A
BZY93C7V5	5248AK
BZY93C7V5R	5248A
BZY93C8V2	5249AK
BZY93C8V2R	5249A
BZY93C9V1	5251AK
BZY93C9V1R	5251A
BZY93C10	5252AK
BZY93C10R	5252A
BZY93C11	5253AK
BZY93C11R	5253A
BZY93C12	5254AK
BZY93C12R	5254A
BZY93C13	5255AK
BZY93C13R	5255A
BZY93C15	5257AK
BZY93C15R	5257A
BZY93C16	5258AK
BZY93C16R	5258A
BZY93C18	5260AK
BZY93C18R	5260A
BZY93C20	5262AK
BZY93C20R	5262A
BZY93C22	5263AK
BZY93C22R	5263A
BZY93C24	5264AK
BZY93C24R	5264A
BZY93C27	5266AK
BZY93C27R	5266A
BZY93C30	5268AK
BZY93C30R	5268A
BZY93C33	5269AK
BZY93C33R	5269A
BZY93C36	5270AK
BZY93C36R	5270A
BZY93C39	5271AK
BZY93C39R	5271A
BZY93C43	5272AK
BZY93C43R	5272A
BZY93C51	5276AK
BZY93C51R	5276A
BZY93C56	5278AK
BZY93C56R	5278A
BZY93C62	5280AK
BZY93C62R	5280A
BZY93C68	5281AK
BZY93C68R	5281A
BZY93C75	5282AK
BZY93C75R	5282A
BZY94/C12	142A
BZY94/C15	145A
BZY94C10	5019A
BZY94C11	5020A
BZY94C12	5021A
BZY94C13	5022A
BZY94C15	5024A
BZY94C16	5025A
BZY94C18	5027A
BZY94C20	5029A
BZY94C22	5030A
BZY94C24	5031A
BZY94C27	5033A
BZY94C30	5035A
BZY94C33	5036A
BZY94C36	5037A
BZY94C39	5038A
BZY94C43	5039A
BZY94C47	5040A
BZY94C51	5041A
BZY94C56	5042A
BZY94C62	5044A
BZY94C68	5045A
BZY94C75	5046A
BZY95-C20	5135A
BZY95C10	5125A
BZY95C11	5126A
BZY95C12	5127A
BZY95C13	5128A
BZY95C15	5130A
BZY95C16	5131A
BZY95C18	5133A
BZY95C20	5135A
BZY95C22	5136A
BZY95C24	5137A
BZY95C27	5139A
BZY95C30	5141A
BZY95C33	5142A
BZY95C36	5143A
BZY95C39	5144A
BZY95C43	5145A
BZY95C47	5146A
BZY95C51	5147A
BZY95C56	5148A

PART NUMBER	NTE REPLACEMENT
BZY95C62	5150A
BZY95C68	5150A
BZY95C75	5152A
BZY96-C10	5125A
BZY96C4V7	5115A
BZY96C5V1	5116A
BZY96C5V6	5117A
BZY96C6V2	5119A
BZY96C6V8	5120A
BZY96C7V5	5121A
BZY96C8V2	5122A
BZY96C9V1	5124A
BZY96C10	5125A
BZY97C3V0	5004A
BZY-19	142A
BZY-83C15	145A
BZY-83D15	145A
BZZ10	5012A
BZZ11	5014A
BZZ12	5015A
BZZ13	5016A
BZZ14	5278A
BZZ15	5180A
BZZ17	5182A
BZZ18	5183A
BZZ19	5185A
BZZ20	5186A
BZZ21	5187A
BZZ22	5188A
BZZ23	5189A
BZZ24	5191A
BZZ25	5192A
BZZ26	5194A
BZZ27	5196A
BZZ28	5197A
BZZ29	5198A
C060607	519
C00 68602300	123AP
C00-686-0241	159
C00-68602300	123AP
C010174-02	912
C060474	74LS51
C060612	4164
C010745	6507
C010745-03	6507
C010745-12	6507
C010750	6532
C010750-03	6532
C010750-12	6532
C010816	4050B
C010816-01	4050B
C010816-03	4050B
C010819-01	960
C061702	928M
C0406	580
C0406(RECT)	580
C0410	125
C0410V	125
C014806	6502
C014806-03	6502
C014806-12	6502
C014806-12(1)	6502
C014809	159
C0508	515
C0510	125
C00686-0258-0	159
C0068602720	159
C017097	74LS08
C0-10750	6532
C0C13000-1C	192
C02	5072A
C05-03C	113A
C08P1	113A
C049	5804
C0615	506
C014311	7474
C014312	74LS09
C014313	74LS244
C014313(1)	74LS244
C014331	2117
C014331-09	2117
C014334	4013B
C014336	4051B
C014336(1)	4051B
C014339	74LS10
C014340	74LS02
C014341	74LS00
C014341(1)	74LS10
C014344	74LS138
C014344(1)	74LS138
C014345	74LS158
C014348	960
C014349	966
C014361	74LS42
C014362	74LS32
C014377	6502
C014377(1)	6502
C014888	135A
C018991	159
C061428	74LS138
C061850	74LS14
C1.0E02	125
C1-1003	723
C1/2-12	278
C1A	178MP
C1B	116
C1D-02A	113A
C1H	116
C2AJ102	116
C3-4	5547
C4C3.6	5006A
C4LS374AP	74LS374
C6	238
C6A	5408
C6B	5408
C6B3	5400
C6F	5408
C6G	5408
C6U	5408
C7	234
C7A4	5454
C8	234
C9FF-10A580	128
C10	113A
C10-02A	113A
C10-04C	113A
C10-1B	113A
C10-2NA	113A
C10-13B	113A
C10-15B	113A
C10-15C	113A
C10-16A	113A
C10-18B	113A
C10-20A	178MP
C10-22C	178MP
C10-31A	113A
C10-38C	113A
C10-47B	113A
C10A	5482
C10B	5483
C10C	5484
C10D	5485
C10F	5481
C10G	5483
C10H	5484
C10P04Q	6087
C10U	5480
C11A	5482
C11B	5483
C11C	5484
C11D	5485
C11E	5486
C11F	5481
C11G	5483
C11H	5484
C11M	5487
C11S1C1E1C	116
C11U	5480
C12(TRANS)	128
C13(TRANS)	101
C14	101
C15(TRANS)	123AP
C15-1	123AP
C15-2	123AP
C15-3	123AP
C15A	5482
C15B	5483
C15C	5484
C15D	5485
C15E	5486
C15F	5481
C15G	5483
C15H	5484
C15M	5487
C15U	5480
C16	123AP
C16A	123AP
C16P04Q	6246
C17	108
C17A	108
C18	123AP
C19	128
C20	128
C20A	5491
C20B	5492
C20C	5545
C20D	5496
C20F	5491
C20U	5491
C21	130
C22	128
C23	128
C23H12B	116
C24	128
C25-06M	552
C26	123AP
C27	128
C27C85F	85
C28	123
C29	123
C30	128
C30-1	5547
C30-2	5547
C30-5	5547
C30A	5522
C30B	5524
C30C	5526
C30D	5527
C30F	5521
C30U	5520
C31	128
C32	128
C32A	128
C33	123AP
C34(TRANS)	103A
C35(TRANS)	103A
C35A	5542
C35B	5543
C35C	5544
C35D	5545
C35E	5546
C35F	5541
C35G	5545
C35H	5544
C35M	5547
C35N	5548
C35S	5548
C35U	5541
C36(TRANS)	101
C36A	5502
C36B	5504
C36C	5506
C36D	5507
C36E	5508
C36F	5501
C36G	5503
C36H	5505
C36U	5500
C37	123AP
C37(TRANS)	123AP
C37A	5522
C37B	5524
C37C	5526
C37D	5527
C37E	5528
C37F	5545
C37G	5545
C37M	5529
C37N	5531
C37S	5530
C37U	5520
C38	123AP
C38(TRANS)	123AP
C38A	5542
C38B	5543
C38C	5544
C38D	5545
C38E	5546
C38F	5541
C38G	5543
C38H	5544
C38M	5547
C38U	5541
C39(TRANS)	108-1
C39-207	123AP
C39A	108
C40	108
C41	163A
C41TV	163A
C42	162
C42A	162
C43	162
C44	162
C44-04	552
C45	123AP
C45B	5575
C45D	5577
C46	128
C47	123AP
C48	123
C48C	123AP
C49	128
C49A10	5371
C49A20	5371
C49B10	5371
C49B20	5371
C49C10	5371
C49C20	5371
C49D10	5371
C49D20	5371
C49E10	5371
C49E20	5371
C49M10	5371
C49M20	5371
C49Y	130
C50(TRANS)	101
C50A	101
C50BA042	121
C51	128
C52(TRANS)	123AP
C52D	5577
C53	123AP
C54	123AP
C55	123AP
C56	107
C58	154
C58A	154
C59	128
C60	109
C60(DIODE)	109
C60(TRANS)	101
C61	128
C62(TRANS)	123AP
C63	123AP
C63(JAPAN)	108-1
C64	123AP
C64(JAPAN)	154
C65	154
C65B	154
C65N	154
C65Y	154
C65YA	154
C65YB	154
C65YTV	154
C66	154
C66-P11111-0001	123AP
C66-P11150-00001	123AP
C67	123AP
C68	123AP
C69	128
C70	154
C71	101
C72	101
C73	100
C73(JAPAN)	101
C74	108
C75	100
C75(JAPAN)	101
C76	100
C76(JAPAN)	101
C77	101
C77C	101
C78	101
C79	108
C80	108
C82-004	6085
C82S	108
C83-829	116
C83-880	116
C87	123AP
C88	154
C88A	154
C89	101
C90	101
C91	103
C95	154
C97	128
C97A	128
C98	108
C99	108
C99CD	128
C100	123AP
C100-0Y	123AP
C101	124
C101(JAPAN)	124
C101A	124
C101B	299
C101X	124
C102	129
C102(JAPAN)	105
C102(RAPAN)	105
C103	123AP
C103(JAPAN)	123AP
C103A	5402
C103A(SCR)	5402
C103A(TRANSISTOR)	123AP
C103B	5404
C103Q	5400
C103Y	5400
C103YY	5401
C104	123AP
C104A	123AP
C105	123AP
C106(PNP)	129
C106A	5454
C106A1	5454
C106A2	5455
C106A3	5455
C106A4	5455
C106B	5455
C106B1	5455
C106B2	5455
C106B3	5455
C106B4	5455
C106C	5456
C106C1	5456
C106C2	5456
C106C3	5456
C106C4	5456
C106D	5457
C106D1	5457
C106D2	5457
C106D3	5457
C106D4	5457
C106E	5458
C106E1	5458
C106F	5453
C106F1	5453
C106F2	5453
C106F3	5453
C106F4	5453
C106M	5458
C106M1	5458
C106Q	5452
C106Q1	5452
C106Q2	5452
C106Q3	5452
C106Q4	5452
C106Y	5455
C106Y1	5452
C106Y2	5452
C106Y3	5452
C106Y4	5452
C107A	5455
C107A1	5455
C107A2	5455
C107A3	5455
C107B	5455
C107B2	5455
C107B3	5455
C107B4	5455
C107C	5456
C107C1	5456
C107C2	5456
C107C3	5456
C107C4	5456
C107D	5457
C107D1	5457
C107D2	5457
C107D3	5457
C107D4	5457
C107F	5453
C107F1	5453
C107F2	5453
C107F3	5453
C107F4	5453
C107Q	5452
C107Q1	5452
C107Q2	5452
C107Q3	5452
C107Q4	5452
C107Y	5452
C107Y1	5452
C107Y2	5452
C107Y3	5452
C107Y4	5452
C108	128
C109	128
C109A	128
C110	123AP
C111	123AP
C111B	108
C111E	123AP
C112(JAPAN)	128
C112(PNP)	129
C113	128
C114	128
C114ESN	2355
C115	128
C116	195A
C116A	5462
C116B	5463
C116C	5465
C116D	5465
C116F	5461
C116T	195A
C117	128
C118	129
C118(JAPAN)	128
C119	129
C119(JAPAN)	128
C120	128
C121	128
C122	123AP
C122(TRANS)	128
C122A	5462
C122A1	5462
C122A2	5462
C122A3	5462
C122A4	5462
C122A5	5462
C122A6	5462
C122B	5463
C122B1	5463
C122B2	5463
C122B3	5463
C122B4	5463
C122B5	5463
C122B6	5463
C122C1	5465
C122C2	5465
C122C3	5465
C122C4	5465
C122C5	5465
C122C6	5465
C122D	5465
C122D1	5465
C122D2	5465
C122D3	5465
C122D4	5465
C122D5	5465
C122D6	5465
C122E1	5466
C122F	5461
C122F1	5461
C122M1	5466
C123(TRANS)	128
C124	128
C124ES	2357
C125	160
C127	108
C128	101
C129	101
C130	128
C131	123AP
C132	123AP
C133	123AP
C134	123AP
C134B	123AP
C135	123AP
C135A	5542
C135B	5543
C135C	5544
C135D	5545
C135E	5546
C135F	5541
C135M	5547
C136	123AP
C137(TRANS)	123AP
C137A	5542
C137E	5546
C137M	5547
C138(TRANS)	123AP
C138A	123AP
C138E10E	5360
C138E20E	5360
C138M10M	5360
C138M20M	5360
C139(TRANS)	123AP
C139E10E	5360
C139E20E	5360
C139M10M	5360
C139M20M	5360
C140(TRANS)	128
C140A	5360
C140B	5360
C140C	5360
C140D	5360
C140F	5360
C140M	5360
C141A	5360
C141B	5360
C141C	5360
C141D	5360
C141F	5360
C141M	5360
C144E	2359
C144E15E	5360
C144E30E	5360
C144ES	2359
C147	128
C147A	5567
C147B	5567
C147C	5568
C147D	5568
C147E	5568
C147M	5568
C147N	5569
C147P	5569
C147PA	5569
C147PB	5569
C147S	5569
C147T	5569
C148(TRANS)	108
C150	128
C150E	5572
C150M	5572
C150N	5574
C150P	5574
C150PA	5574
C150PB	5574
C150PBX500	5584
C150S	5574
C150T	128
C150T(SCR)	5574
C151	123AP
C152(TRANS)	128
C152E	5577
C152M	5577
C152N	5579
C152P	5579
C152PA	5579
C152PB	5579
C152S	5579
C152T	5579
C154	152
C154B	152
C154C	152
C154D	5371
C154E	5371
C154H	152
C154M	5371
C155	108
C155A	5371
C155B	5371
C155C	5371
C155D	5371
C155E	5371
C156	108
C156A(SCR)	5368
C156B(SCR)	5368
C156C(SCR)	5368
C156D(SCR)	5368
C156M(SCR)	5368
C157	123
C157A(SCR)	5368
C157B(SCR)	5368
C157C(SCR)	5368
C157D(SCR)	5368
C157E(SCR)	5368
C157M(SCR)	5368
C158E	5371
C158M	5371
C158N	5372
C158P	5372
C158PA	5372
C158PB	5372
C158S	5372
C158T	5372
C159	123AP
C159E	5368
C159E(SCR)	5368
C159M	5368
C159N	5369
C159P	5369
C159PA	5369
C159PB	5369
C159S	5369
C159T	5369
C160	123AP
C162YA-Y	289A
C163	195A
C164A	5371
C164C	5371
C164D	5371
C164E	5371
C164M	5371
C165B	5371
C165C	5371
C165D	5371
C165E	5371
C165M	5371
C165N	5372
C166	123AP
C167	123AP
C170	108
C171	107
C172	108
C172A	108
C173	101
C174	107
C174A	107
C175	101
C175B	102A
C177	101
C178	101
C179	103A
C180(TRANS)	103A
C180A	5580
C180AX500	5587
C180B	5580
C180BX500	5587
C180C	5582
C180CX500	5587
C180D	5582
C180DX500	5587
C180E	5582
C180EX500	5587
C180M	5582
C180MX500	5587
C180N	5584
C180P	5584
C180PA	5584
C180PB	5584
C180S	5584
C180T	5584
C181	103A
C182	313
C182Q	313
C183	313
C183E	313
C183J	313
C183K	313
C183L	313
C183M	313
C183P	313
C183Q	313
C183R	313
C183W	313
C184	313
C184A	5374
C184B	5374
C184C	5374
C184D	5374
C184E	5374
C184H	313
C184J	313
C184L	313
C184M	5374
C184N	5375
C185	313
C185(TRANS)	313
C185A	5374
C185B	5374
C185C	5374
C185D	5374
C185E	5374
C185J	313
C185M	5374
C185N	5375
C185Q	313
C185R	313
C185V	108
C186	107
C187	107
C188	128
C188A	125
C188AB	128
C189	128
C190	128
C191	123AP
C192	123AP
C193	123AP
C194	123AP
C195	123AP
C196	123AP
C197	123AP
C199	108
C200(SCR)	5494
C200(TRANS)	123AP
C201	129
C201(JAPAN)	123AP
C202	129
C202(JAPAN)	123AP
C203	123AP
C203A	5402
C203B	5404
C203C	5405
C203D	5405
C204	123AP
C205	123AP
C206	108
C208	128
C210	128
C211	128
C212	194
C213	128
C214	128
C215	128
C216	128
C217	128
C218	123AP
C218A	123AP
C220	128
C220(TRANS)	123AP
C220A	5502
C220A2	5562
C220A4	5534
C220B	5504
C220B2	5562
C220B4	5534
C220C	5506
C220C2	5564
C220C4	5534
C220D	5507
C220D2	5564
C220D4	5534
C220E	5508
C220E2	5566
C220E4	5534
C220F	5501
C220F2	5562
C220F4	5534
C220M4	5534
C220U	5500
C220U2	5562
C220U4	5534
C221	128

PART NUMBER	NTE REPLACEMENT
C222	128
C222A	5514
C222B	5514
C222C	5515
C222D	5516
C222E	5516
C222F	5514
C222U	5514
C223(TRANS)	128
C224	128
C225	128
C226	128
C227	128
C228	128
C228A	5542
C228A3	5562
C228A4	5534
C228B	5543
C228B3	5562
C228B4	5534
C228C	5545
C228C3	5562
C228C4	5534
C228D	5545
C228D3	5564
C228D4	5534
C228E	5547
C228E3	5566
C228E4	5534
C228F4	5534
C228M	5566
C228M4	5534
C228U4	5534
C229	128
C229A	5517
C229B	5517
C229C	5518
C229D	5518
C229E	5519
C229M	5519
C230	123AP
C230A4	5534
C230B4	5534
C230C4	5534
C230D4	5534
C230E4	5534
C230F4	5534
C230M4	5534
C230U4	5534
C231	128
C231D	5518
C232	128
C232D	5518
C233	128
C234	128
C234A2	5562
C234A3	5562
C234A4	5534
C234B2	5562
C234B3	5562
C234B4	5534
C234C2	5564
C234C3	5564
C234C4	5534
C234D2	5564
C234D3	5564
C234D4	5534
C234E2	5566
C234E3	5566
C234E4	5534
C234F2	5562
C234F3	5562
C234F4	5534
C234M	5519
C234M2	5566
C234M3	5566
C234M4	5534
C234U2	5562
C234U3	5562
C234U4	5534
C235	293
C235(0)	190
C235-0	293
C235-O	293
C236	128
C237	123AP
C238	128
C239	123AP
C240	162
C241	162
C242	162
C243	162
C244	130
C245	162
C246	162
C247	128
C248	128
C249	128
C250	161
C251	161
C251A	161
C252	161
C253	161
C254	175
C261	192
C263	108
C266	107
C267	123AP
C267A	123AP
C268	128
C268A	128
C269	108
C270	162
C271	108
C272	108
C273	154
C277C	103A
C281	123AP
C281A	123AP
C281B	123AP
C281C	123AP
C281C-EP	123AP
C281D	123AP
C281EP	123AP
C281H	123AP
C281HA	123AP
C281HB	123AP
C281HC	123AP
C282	123AP
C282AR	85
C282H	123AP
C282HA	123AP
C282HB	123AP
C282HC	123AP
C283	123AP
C284	123AP
C284H	123AP
C284HA	123AP
C284HB	123AP
C285	123AP
C285A	123AP
C286(TRANS)	108
C287(TRANS)	313
C287A	313
C288	313
C288A	313
C289	108
C290	224
C290(TRANS)	195A
C290A	5587
C290B	5587
C290C	5587
C290D	5587
C290E	5587
C290M	5587
C290N	5589
C290P	5589
C290PA	5589
C290PB	5589
C290S	5589
C290T	5589
C291(TRANS)	128
C292	128
C293	195A
C296	108
C299	225
C300	123AP
C301	123AP
C301A(PNP)	129
C302	106
C302(JAPAN)	123AP
C302(PNP)	129
C306	128
C307	128
C308	128
C309	128
C310	128
C311	195A
C312	224
C313	108
C313(JAPAN)	161
C313C	161
C313H	161
C315	123AP
C316	108
C317	123AP
C317C	123AP
C318	108
C318(JAPAN)	123AP
C318A	108
C318A(JAPAN)	123AP
C319	123AP
C320	123AP
C321	123AP
C321H	123AP
C321HA	123AP
C321HB	123AP
C321HC	123AP
C321V	127
C323	123AP
C324	123AP
C324A	123AP
C324H	123AP
C324HA	123AP
C325	152
C325A	152
C325E	152
C327	159
C327(EUROPE)	159
C328	159
C328(EUROPE)	159
C328A	123AP
C328BK	319P
C329	107
C329B	107
C329C	107
C333H	278
C333HA	278
C333HB	278
C333HC	278
C335	199
C337	188
C337(EUROPE)	188
C337B	121
C338	123AP
C338(EUROPE)	123AP
C341V	127
C348	161
C350(TRANS)	123AP
C350H	123AP
C351	107
C351(FA)	107
C352(JAPAN)	123AP
C352A	123AP
C352A(JAPAN)	128
C353	128
C353A	128
C354A(SCR)	5380
C354B(SCR)	5380
C354C(SCR)	5380
C354D(SCR)	5380
C354E(SCR)	5380
C354M(SCR)	5380
C355A(SCR)	5380
C355B(SCR)	5380
C355C(SCR)	5380
C355D(SCR)	5380
C355E(SCR)	5380
C355M(SCR)	5380
C356	123AP
C358C	928M
C358E(SCR)	5380
C358M(SCR)	5380
C358N	5381
C358P	5381
C358PA	5381
C358PB	5381
C358S	5381
C360	123AP
C360D	123AP
C361	107
C362	107
C363	123AP
C364A(SCR)	5380
C364B(SCR)	5380
C364C(SCR)	5380
C364D(SCR)	5380
C364E(SCR)	5380
C364M(SCR)	5380
C365A(SCR)	5380
C365B(SCR)	5380
C365C(SCR)	5380
C365D(SCR)	5380
C365E(SCR)	5380
C365M(SCR)	5380
C365N	5381
C365S	5381
C366	123AP
C367	123AP
C368	199
C368BL	199
C368GR	199
C368V	199
C369	123AP
C369BL	123AP
C369G	123AP
C369G-BL	123AP
C369G-GR	123AP
C369G-V	123AP
C369GBL	123AP
C369GGR	123AP
C369GR	123AP
C369V	123AP
C370	108
C370G	108
C370H	108
C370J	108
C370K	108
C371	123AP
C371(0)	123AP
C371-0	123AP
C371-R	123AP
C371-R-1	199
C371B	123AP
C371G	123AP
C371R	123AP
C372	85
C372(0)	123AP
C372-0	123AP
C372-1	123AP
C372-2	123AP
C372-R	123AP
C372-Y	123AP
C372-Z	123AP
C372GR	123AP
C372H	123AP
C372Y	123AP
C373	199
C373BL	199
C373G	199
C373GR	199
C373W	199
C374	199
C374-BL	199
C374-V	199
C374JA	199
C375	311
C375-0	311
C375-Y	311
C376	128
C377	123AP
C378	123AP
C379	123AP
C380	229
C380-0	229
C380-0/4454C	229
C380A	5590
C380A(0)	229
C380A-0(TV)	229
C380A-R	229
C380A-R(TV)	229
C380AO	229
C380AR	85
C380ATV	229
C380AY	229
C380B	5590
C380C	5591
C380D	5591
C380E	5591
C380M	5591
C380N	5592
C380P	5592
C380PA	5592
C380PB	5592
C380R	229
C380R/4454C	229
C380S	5592
C380T	5592
C380Y	229
C381	107
C381-0	107
C381-R	107
C381BN	107
C381R	107
C382	319P
C382-BK(1)	319P
C382-BK(2)	319P
C382-GR	319P
C382-GY	319P
C382BL	319P
C382BN	319P
C382BR	319P
C382G	319P
C382R	319P
C382V	319P
C383	319P
C383G	319P
C383T	319P
C383W	319P
C383Y	319P
C384	108
C384-0	108
C384A(SCR)	5380
C384C(SCR)	5380
C384D(SCR)	5380
C384E(SCR)	5380
C384M(SCR)	5380
C384Y	108
C385	107
C385A	107
C385A(SCR)	5380
C385B(SCR)	5380
C385C(SCR)	5380
C385D(SCR)	5380
C385E(SCR)	5380
C385M(SCR)	5380
C385N	5381
C385S	5381
C386	108
C386A-0(TV)	108
C387	108
C387(TRANS)	316
C387A	108
C387A(FA-3)	108
C387A(FA-3)TRAN	316
C387A(TRANS)	316
C387E	5386
C387G	108
C387G(TRANS)	316
C387M	5386
C387N	5387
C387P	5387
C387PA	5387
C387PB	5387
C387S	5387
C387T	5387
C388	123AP
C388(TRANS)	233
C388-A	85
C388A	85
C388A(KOREA)	85
C388A-TM	85
C388ATM	85
C388ATV	233
C388E	5386
C388M	5386
C388N	5387
C388P	5387
C388PA	5387
C388PB	5387
C388S	5387
C388T	5387
C389	161
C389-0	161
C389R	161
C390(TRANS)	161
C390E	5595
C390EX555	5595
C390M	5595
C390MX555	5595
C390N	5596
C390NX555	5596
C390P	5596
C390PA	5596
C390PAX555	5596
C390PB	5596
C390PBX555	5596
C390PX555	5596
C390S	5596
C390SX555	5596
C390T	5596
C390TX555	5596
C392	108
C393C	943M
C393C1C	943M
C393C(IC)	943M
C394	107
C394(SCR)	5386
C394(TRANS)	229
C394-0	229
C394-O	229
C394A	5386
C394B	5386
C394C	5386
C394D	5386
C394E	5386
C394GR	229
C394M	5386
C394MX35	5386
C394R	229
C394W	229
C394Y	229
C395	123AP
C395(SCR)	5386
C395A	123AP
C395A(SCR)	5386
C395B	5386
C395C	5386
C395D	5386
C395E	5386
C395M	5386
C395R	123AP
C396	123AP
C397(TRANS)	108
C397E	5386
C397M	5386
C397N	5387
C397P	5387
C397PA	5387
C397PB	5387
C397S	5387
C397T	5387
C398(FA-1)	161
C398(TRANS)	161
C398E	5386
C398M	5386
C398N	5387
C398P	5387
C398PA	5387
C398PB	5387
C398T	5387
C399	161
C400	123AP
C400-GR	199
C400-0	123AP
C400-R	123AP
C400-Y	123AP
C401	106
C401(JAPAN)	123AP
C402	129
C403(C)	123AP
C403B(SONY)	128
C403C	123AP
C403C(SONY)	128
C404	123AP
C405	108
C406	161
C407	154
C407(JAPAN)	162
C408	163A
C409	163A
C410	163A
C411	163A
C412	163A
C420	128
C423	123AP
C423B	123AP
C423C	123AP
C423D	123AP
C423E	123AP
C423F	123AP
C424	108
C424(JAPAN)	123AP
C424D	123AP
C425	123AP
C425B	123AP
C425C	123AP
C425D	123AP
C425E	123AP
C425F	123AP
C426	128
C428	293
C429	108
C429J	108
C429X	108
C430	108
C430H	108
C430W	108
C440	123
C441	123
C442	123
C443	128
C444	123AP
C450	123AP
C451E	5598
C451M	5598
C454	195A
C454(A)	123AP
C454A	123AP
C454B	123AP
C454C	85
C454D	123AP
C454L	123AP
C454LA	123AP
C455	289
C456-0	224
C456-O	195A
C456A	195A
C456D	195A
C458	85
C458(C)	289
C458A	289
C458AD	289
C458B	289
C458B(JAPAN)	85
C458B-D	289
C458BC	289
C458BK	289
C458BL	289
C458BLG	289
C458C	85
C458CLG	289
C458CM	289
C458D	85
C458G	289
C458GLB	289
C458K	289
C458KA	289
C458KB	289
C458KC	289
C458KD	289
C458L	289
C458LB	289
C458LG	289
C458LG(B)	123AP
C458LGA	289
C458LGB	289
C458LGC	289
C458LGD	289
C458LGO	289
C458LGS	289
C458M	289
C458P	289
C458RGS	289
C458TOK	289
C458VC	289
C459	128
C459B	128
C459D	289
C460	85
C460(A)	123AP
C460(B)	123AP
C460A	233
C460B	233
C460C	233
C460D	233
C460G	233
C460GB	233
C460H	233
C460K	233
C460L	233
C461	229
C461A	229
C461B	229
C461C	229
C461E	229
C461L	229
C463	319P
C463(Y)	131
C463H	319P
C464	161
C464C	161
C465	161
C466	161
C466H	161
C468	123AP
C468(LGR)	289
C468A	123AP
C469	313
C469A	313
C469F	313
C469K	313
C469Q	313
C469R	313
C470	154
C472Y	154
C475	123AP
C475K	123AP
C476	123AP
C477	108
C478	195A
C478(D)	224
C478_4	195A
C478D	195A
C479	128
C481	195A
C481X	224
C482	195A
C482-0	195A
C482-Y	195A
C482_GR	195A
C482GR	195A
C482X	195A
C482Y	195A
C485LGBM	289
C487	175
C488	175
C489	175
C490	175
C491	175
C491BL	175
C491R	175
C491Y	175
C492	162
C494-R	184
C495	184
C495-0	184
C495-Y	295
C495T	295
C495T(CB)	295
C495Y	295
C496	295
C496(0)	295
C496-0	295
C496-0	295
C496-R	295
C496-Y	295
C496Y	184
C497	128
C497-0	128
C497-R	128
C497-Y	128
C498	128
C498-0	128
C498-R	128
C498-Y	128
C499	194
C499-R(FA-1)	194
C499-RY	194
C499-Y(FA-1)	194
C499R	194
C499Y	194
C500	154
C500R	154
C500Y	154
C501(TRANS)	128
C501A	5594
C501B	5594
C501C	5595
C501D	5595
C501E	5595
C501M	5595
C501N	5596
C501P	5596
C501PA	5596
C501PB	5596
C501S	5596
C501T	5596
C502	129
C502(JAPAN)	195A
C503	128
C503-0	128
C503-Y	128
C503GR	128
C504	128
C504-0	128
C504-Y	128
C504GR	128
C505	154
C505-0	154
C505-R	154
C506	154
C506-0	154
C506-R	154
C507	154
C507-0	154
C507-R	154
C507-Y	154
C509	289
C509(0)	128
C509(0)	128
C509G	128
C509Y	289
C511A	5454
C511B	5455
C511C	5456
C511F	5454
C511G	5454
C511H	5456
C511U	5452
C512	128
C512-0	128
C512-R	128
C513	128
C513-0	128
C513R	128
C514	124
C515	124
C515A	124
C515A(BK)	124
C515AX	124
C516	128
C517	237
C517C	237
C519	162
C519A	162
C520(TRANS)	130
C520A	130
C521	130
C521A	130
C522	225
C522-0	225
C522-R	225
C523	225
C523-0	225
C523-R	225
C524	225
C524-0	225
C524-R	225
C525	225
C525-0	225
C525-R	225
C526	154
C529	123AP
C529A	123AP
C535	229
C535A	229
C535B	229
C535C	229
C535G	229
C536	199
C536A	199
C536AG	199
C536B	85
C536C	85
C536D	199
C536DK	199
C536E	85

PART NUMBER	NTE REPLACEMENT
C536ED	199
C536EH	199
C536EJ	199
C536EN	199
C536ER	199
C536ET	199
C536EZ	199
C536F	85
C536F1	199
C536F2	199
C536FC	199
C536FP	199
C536FS	199
C536FS6	199
C536FZ	199
C536G	85
C536GF	199
C536GK	199
C536GT	199
C536GV	199
C536GY	199
C536H	199
C536K	85
C536KE	85
C536KF	85
C536KG	85
C536W	199
C537	199
C537(F)	123AP
C537(G)	123AP
C537-01	123AP
C537A	123AP
C537B	123AP
C537C	123AP
C537D	123AP
C537D2	123AP
C537E	123AP
C537EF	123AP
C537EH	123AP
C537EJ	123AP
C537EK	123AP
C537F	123AP
C537F1	123AP
C537F2	123AP
C537FC	123AP
C537FV	123AP
C537G	123AP
C537G1	123AP
C537GF	123AP
C537GI	123AP
C537H	123AP
C537HT	123AP
C537W	123AP
C538	123AP
C538A	123AP
C538AQ	123AP
C538P	123AP
C538Q	123AP
C538R	123AP
C538S	123AP
C538T	123AP
C539	123AP
C539K	123AP
C539L	123AP
C539R	123AP
C539S	123AP
C540	123AP
C544	108
C544C	108
C544D	108
C544E	108
C545	107
C545A	107
C545B	107
C545C	107
C545D	107
C545E	107
C547C	123AP
C547C(EUROPE)	123AP
C548	123AP
C548(EUROPE)	123AP
C548A	199
C548A(EUROPE)	199
C548AEUROPE	199
C548C	123AP
C548C(EUROPE)	123AP
C549C	199
C557	159
C557(EUROPE)	159
C558	159
C558(EUROPE)	159
C558B	159
C558B(EUROPE)	159
C558C	91
C558C(EUROPE)	91
C559B	297
C560	128
C561	108
C562	161
C562O	129
C562Y	161
C563	161
C563A	161
C563A(3RDIF)	233
C564	128
C564A	128
C564P	128
C564Q	128
C564R	128
C564S	128
C564T	128
C566	123AP
C567	161
C568	108
C571	195A
C575C2	1140
C580	195A
C582	124
C582A	124
C582B	124
C582BC	124
C582BX	124
C582BY	124
C582C	124
C583	278
C583C	278
C586	162
C587	123AP
C587A	123AP
C588	123AP
C589	154
C590	289
C590Y	289
C593	123AP
C594	128
C595	123AP
C596	1187
C596C	1187
C601	311
C602E	123AP
C605	313
C605(NEC)	313
C605(Q)	313
C605K	313
C605L	313
C605M	313
C605Q	313
C605TW	313
C606	313
C606(NEC)	313
C608	237
C608E	237
C608T	237
C609	237
C609F	237
C609T	237
C610	159
C611	108
C611A	5408
C611B	5408
C611F	5408
C611G	5408
C611U	5408
C612	108
C613	108
C614	195A
C614D	195A
C614E	195A
C614F	195A
C614G	195A
C615	195A
C615A	195A
C615B	195A
C615C	195A
C615D	195A
C615E	195A
C615F	195A
C615G	195A
C619	123AP
C619B	123AP
C619C	123AP
C619D	123AP
C620	123AP
C620C	123AP
C620CD	123AP
C620D	123AP
C620DE	123AP
C620E	123AP
C621	123AP
C622	123AP
C627	154
C628	128
C629	107
C631	123AP
C631A	123AP
C632	123AP
C632A	123AP
C633	123AP
C633-7	123AP
C633A	123AP
C633G	123AP
C633H	123AP
C634	123AP
C634A	123AP
C635A	124
C636	383
C636(EUROPE)	159
C637	297
C640	123AP
C640B	123AP
C641	108
C641B	108
C641K	85
C642	164
C642A	164
C643	238
C643A	238
C644	199
C644C	199
C644F	199
C644F/494	199
C644FR	199
C644FS	199
C644H	199
C644HR	199
C644HS	293
C644P	199
C644PJ	199
C644Q	199
C644R	199
C644RST	199
C644S	199
C644S/494	199
C644ST	199
C644T	199
C645	107
C645A	107
C645B	107
C645C	107
C645G	107
C645N	107
C647Q	130
C647R	130
C648	199
C648H	199
C649	108
C650	199
C650B	199
C651	278
C652	311
C654	123AP
C655	123AP
C656	107
C657	107
C658	108
C658A	108
C659	108
C662	108
C663	161
C664	130
C664B	130
C664C	130
C665	280
C665H	280
C665HA	280
C665HB	280
C668	229
C668-0	229
C668A	229
C668B	229
C668B1	229
C668BC2	229
C668C	229
C668C1	229
C668CD	229
C668D	229
C668D0	229
C668D1	229
C668DE	229
C668DO	229
C668DV	229
C668DX	229
C668DZ	229
C668E	229
C668E1	229
C668E2	229
C668EP	229
C668EV	229
C668EX	229
C668F	229
C670	124
C673	234
C673C2	159
C673D	159
C674	107
C674(JAPAN)	167
C674B	161
C674C	161
C674CV	161
C674D	161
C674E	161
C674F	161
C674G	161
C675	283
C675-0	107
C680	175
C680A	175
C680R	175
C681	283
C681A	283
C681B	283
C681YL	283
C682	161
C682A	161
C682B	161
C683	161
C683A	161
C683B	161
C683V	161
C684	108
C684(JAPAN)	108
C684A	108
C684A(JAPAN)	108
C684B	108
C684BK	108
C684F	108
C685	124
C685(0)	124
C685A	124
C685B	124
C685GU	124
C685P	124
C685S	124
C685Y	124
C686	154
C686-248-0	159
C687	162
C688	108
C689	123AP
C689H	123AP
C693	199
C693(JAPAN)	199
C693A	199
C693B	199
C693C	199
C693D	199
C693E	199
C693E(JAPAN)	199
C693EB	199
C693ET	199
C693F	199
C693FC	199
C693FL	199
C693FU	199
C693G	199
C693G(JAPAN)	199
C693GL	199
C693GS	199
C693GU	199
C693GZ	199
C693H	199
C694	199
C694D	123AP
C694E	199
C694F	199
C694G	199
C694Z	199
C695	107
C696	195A
C696A	195A
C696B	195A
C696D	195A
C696E	195A
C696F	195A
C696G	195A
C696H	195A
C696I	195A
C697	237
C697A	237
C697D	237
C697F	237
C701	311
C701(TRANS)	123
C701N	5599
C701P	5599
C701PA	5599
C701PB	5599
C701S	5599
C701T	5599
C702	123
C703N	5599
C703P	5599
C703PA	5599
C703PB	5599
C703S	5599
C703T	5599
C705	107
C705B	107
C705C	107
C705D	107
C705E	107
C705F	107
C705TV	107
C707	107
C707H	107
C708	128
C708A	128
C708AA	128
C708AB	128
C708AC	128
C708AH	128
C708AHA	128
C708AHB	128
C708AHC	128
C708B	128
C708C	128
C709	123AP
C709B	123AP
C709C	123AP
C709CD	123AP
C709D	123AP
C710	123AP
C710(B)	123AP
C710(C)	123AP
C710(D)	123AP
C710-1	123AP
C710-2	123AP
C710-4	123AP
C710-13(BCE)	85
C710-14	107
C710-14(BCE)	85
C710B	123AP
C710B2	123AP
C710BC	123AP
C710C	123AP
C710D	123AP
C710DE	123AP
C710E	123AP
C711	199
C711(E)	199
C711A	199
C711AD(BCE)	85
C711AE	199
C711AH(BCE)	199
C711C(BCE)	85
C711D	199
C711E	199
C711F	199
C711F(BCE)	85
C711FG	199
C711G	199
C711H(BCE)	199
C712	123AP
C712A	123AP
C712C	123AP
C712D	123AP
C712E	123AP
C712W	123AP
C713	123AP
C714	123AP
C715	199
C715(JAPAN)	123AP
C715A	123AP
C715B	123AP
C715C	123AP
C715D	123AP
C715E	123AP
C715EJ	123AP
C715EV	123AP
C715F	123AP
C715XL	123AP
C716	123AP
C716B	123AP
C716C	123AP
C716D	123AP
C716E	123AP
C716F	123AP
C716G	123AP
C717	161
C717(FINAL-IF)	123AP
C717B	161
C717BK	161
C717BLK	161
C717C	161
C717E	161
C720	123AP
C722	229
C725	123AP
C725-0	123AP
C727	154
C728	154
C731R	128
C732	199
C732BL	199
C732GR	199
C732S	199
C732V	199
C732Y	199
C733	199
C733-0	199
C733-0	199
C733BL	199
C733GR	199
C733R	199
C733V	199
C733Y	199
C734	128
C734-0	128
C734-0	128
C734-R	128
C734-Y	128
C734GR	128
C734O	128
C734Y	128
C735	289
C735(FA-3)	108
C735(0)	289
C735-0	289
C735-0	161
C735-R	123AP
C735B	289
C735F	289
C735FA3	289
C735GR	289
C735H	289
C735J	289
C735K	289
C735L	289
C735Y	289
C736	130
C738	107
C738C	107
C738D	107
C739	107
C739C	107
C740	108
C741	123AP
C742	123AP
C743A	154
C744	192
C746A	154
C748	108
C752	85
C752G	123AP
C752GY(JAPAN)	85
C752Y	85
C760	123AP
C761	161
C761Y	161
C761Z	161
C762	161
C763	229
C763(C)	107
C763B	229
C763C	229
C763CD	229
C763D	229
C764	133
C765	130
C768	130
C772	107
C772B	229
C772BG	229
C772BH	229
C772BV	229
C772BX	229
C772BY	229
C772C	229
C772C1	229
C772C2	229
C772CK	229
C772CL	229
C772CS	229
C772CU	229
C772CV	229
C772CX	229
C772D	229
C772DJ	229
C772DU	229
C772DV	229
C772DX	229
C772DY	229
C772E	229
C772F	229
C772K	229
C772KB	229
C772KC	229
C772KD	229
C772KD1	229
C772KD2	229
C772R	229
C772R(JAPAN)	229
C772RB-D	229
C772RD	229
C773	123AP
C773C	123AP
C773D	123AP
C773E	123AP
C774	195A
C775	195A
C776	195A
C776(Y)	224
C776Y	195A
C777	237
C778	237
C778B	237
C780	287
C780AG	287
C780AG-0	287
C780AG-R	287
C780AG-Y	287
C780G	287
C781	195A
C782	124
C783	124
C784	229
C784-0	229
C784-0	229
C784A	229
C784BN	229
C784R	229
C784Y	229
C785	107
C785(0)	229
C785-0(ECB)	229
C785BN	229
C785D	229
C785E	229
C785M-0(ECB)	229
C785R	229
C786	229
C786R	161
C787	161
C788	154
C789	152
C789-0	152
C789-0	152
C789-R	152
C789-Y	152
C790-0	291
C791	175
C792	94
C793	130
C793BL	130
C793R	130
C793Y	130
C794R	130
C795	124
C795A	124
C796	123AP
C797	128
C798	128
C799	236
C799K	237
C800	107
C803	128
C805	154
C806	283
C806A	283
C807	163A
C807A	163A
C814	192
C815	293
C815(M)	123AP
C815-0	123AP
C815-0	123AP
C815A	123AP
C815B	123AP
C815C	123AP
C815F	123AP
C815K	123AP
C815L	123AP
C815M	123AP
C815S	123AP
C815SA	123AP
C815SC	123AP
C815Y	123AP
C815Y(EBC)	123AP
C815Y(KOREA)	123AP
C816	128
C816K	128
C818	154
C821	278
C822	278
C825	123AP
C826	128
C827	128
C828	199
C828-0	199
C828-OP	199
C828A	199
C828AP	199
C828AQ	199
C828AR	199
C828AS	123AP
C828E	199
C828F	199
C828FR	199
C828H	199
C828K	199
C828LR	199
C828LS	199
C828N	199
C828P	199
C828Q	85
C828QRS	199
C828R	85
C828R/494	199
C828S	85
C828S(JAPAN)	85
C828T	199
C828W	199
C828Y	199
C829	123AP
C829A	123AP
C829B	123AP
C829BC	123AP
C829C	123AP
C829D	123AP
C829R	123AP
C829X	123AP
C829Y	123AP
C830	175
C830A	175
C830B	175
C830C	175
C833BL	199
C835	107
C836M	123AP
C837	107
C837F	107
C837H	107
C837K	107
C837L	107
C837WF	107
C838	123AP
C838(H)	199
C838(J)	199
C838(K)	199
C838(M)	199
C838A	123AP
C838B	123AP
C838C	123AP
C838D	123AP
C838E	123AP
C838F	123AP
C838H	123AP
C838J	123AP
C838K	123AP
C838L	123AP
C838M	123AP
C838R	123AP
C839	293
C839(H)	123AP
C839(J)	123AP
C839(M)	123AP
C839A	123AP
C839B	123AP
C839C	123AP
C839D	123AP
C839E	123AP
C839F	123AP
C839H	123AP
C839J	123AP
C839L	123AP
C839M	123AP
C839N	123AP
C839S	123AP
C840	175
C840A	175
C840AC	175
C840H	175
C840PQ	175
C844	123AP
C847	123AP
C848	123AP
C849	123AP
C850	123AP
C851	130
C853	192
C853A	192
C853B	192
C853C	192
C853KLM	192
C853L	192
C856	154
C856-02	154
C856C	154
C857	154
C857H	154
C858	199
C858E	199
C858F	199
C858FG	199
C858G	199
C859	199
C859E	199
C859F	199

PART NUMBER	NTE REPLACEMENT
C859FG	199
C859G	199
C859GK	199
C860	161
C860C	161
C860D	161
C860E	161
C863	161
C864	161
C867	124
C868	154
C869	154
C870	123AP
C870BL	123AP
C870E	123AP
C870F	123AP
C871	123AP
C871BL	123AP
C871D	123AP
C871E	123AP
C871F	123AP
C871G	123AP
C875	128
C875-1	128
C875-1C	128
C875-1D	128
C875-1E	128
C875-1F	128
C875-2	128
C875-2C	128
C875-2D	128
C875-2E	128
C875-2F	128
C875-3	128
C875-3C	128
C875-3D	128
C875-3E	128
C875-3F	128
C875BR	128
C875C	128
C875D	128
C875E	128
C875F	128
C876	128
C876C	128
C876D	128
C876E	128
C876F	128
C876TV	128
C876TVD	128
C876TVE	128
C876TVEF	128
C881	192
C881A	192
C881B	192
C881C	192
C881D	192
C881K	192
C881L	192
C889	162
C894	123AP
C895	175
C896	123AP
C897	280
C897A	280
C897B	280
C897C	280
C898	280
C898A	280
C898B	280
C898C	280
C899	123AP
C899K	123AP
C900	199
C900(L)	199
C900A	199
C900B	199
C900C	199
C900D	199
C900E	199
C900F	199
C900L	199
C900M	199
C900S	199
C900SA	199
C900SB	199
C900SC	199
C900SD	199
C900U	199
C901	163A
C901A	163A
C903D	229
C907	199
C907A	199
C907AC	199
C907AD	199
C907AH	199
C907C	199
C907D	199
C907H	199
C907HA	199
C912	108
C913	123AP
C917	229
C917K	229
C918	161
C920	229
C920E	107
C920Q	229
C920R	229
C921	107
C921C1	107
C921K	107
C921L	107
C921M	107
C922	107
C922A	107
C922B	107
C922C	107
C922K	107
C922L	107
C922M	107
C923	199
C923A	199
C923B	199
C923C	199
C923D	199
C923E	123AP
C923F	199
C924	108
C924E	108
C924F	108
C924M	108
C925	123AP
C926	154
C926A	154
C927	319P
C927A	319P
C927B	319P
C927C	319P
C927CJ	161
C927CU	319P
C927CW	319P
C927D	319P
C927E	319P
C928	161
C928B	161
C928C	161
C928D	161
C928E	161
C929	107
C929-0	229
C929B	229
C929C	229
C929C1	229
C929D	229
C929D1	229
C929DE	229
C929DP	229
C929DU	229
C929DV	229
C929E	229
C929ED	229
C929F	229
C929FK	229
C930	107
C930B	229
C930BK	229
C930BV	229
C930C	229
C930CK	199
C930CL	229
C930CS	229
C930D	229
C930DE	107
C930DH	199
C930DS	229
C930DT	229
C930DT-2	229
C930DX	229
C930DZ	199
C930E	107
C930EP	229
C930ET	107
C930EV	229
C930EX	229
C930F	229
C931	186A
C931C	186A
C931D	186A
C931E	186A
C932	152
C932E	152
C933	123AP
C933BB	123AP
C933C	123AP
C933D	123AP
C933E	123AP
C933F	123AP
C933FP	123AP
C933FPC	123AP
C933FPD	123AP
C933FPE	123AP
C933FPF	123AP
C933FPG	123AP
C933G	123AP
C934	128
C934(RECT)	117
C934(TRANS)	123AP
C934C	123AP
C934D	123AP
C934E	123AP
C934F	123AP
C934G	123AP
C934P	123AP
C935	162
C936	164
C937	238
C937(BK)	238
C937(YL)	238
C937-01	238
C937A	238
C937B	238
C937YL	238
C938	123AP
C938A	123AP
C938B	123AP
C938C	123AP
C939	328
C939D	289
C939L	328
C940	283
C940L	283
C940M	283
C941	123AP
C941-0	123AP
C941-O	123AP
C941-R	123AP
C941-Y	123AP
C941R	123AP
C943	123AP
C943A	123AP
C943B	123AP
C943C	123AP
C944	123AP
C944A	123AP
C944B	123AP
C944C	123AP
C944D	123AP
C944K	123AP
C945	85
C945(R)	199
C945-0	199
C945A	199
C945AP	199
C945AQ	199
C945B	199
C945C	199
C945D	199
C945E	199
C945F	199
C945G	199
C945H	199
C945K	199
C945L	199
C945M	199
C945O	199
C945P	85
C945P(JAPAN)	85
C945Q	85
C945Q(JAPAN)	85
C945QL	199
C945QP	199
C945R	199
C945S	199
C945T	199
C945TQ	199
C945TR	199
C945X	199
C945Y	123AP
C947	161
C948	161
C957	161
C959	128
C959A	128
C959B	128
C959C	128
C959D	128
C959M	128
C959S	128
C959SA	128
C959SB	128
C959SC	128
C959SD	128
C960	123AP
C960(JAPAN)	225
C960A	225
C960B	225
C960C	225
C960D	225
C960S	225
C960SA	225
C960SB	225
C960SC	225
C960SD	225
C966	123AP
C967	123AP
C968	123AP
C968P	123AP
C971	192
C972	128
C972C	128
C972D	128
C972E	128
C982	172A
C983	198
C983-0	198
C983-R(ECB)	287
C983-Y	198
C983A	198
C983C	198
C983R	198
C983S	198
C983Y	198
C984	123AP
C984A	123AP
C984B	123AP
C984C	123AP
C991	123AP
C992	123AP
C993	128
C995	154
C996	225
C997	161
C999	165
C999A	165
C1000	199
C1000-BL	199
C1000-GR	199
C1000-Y	123AP
C1000Y	199
C1001	278
C1002	199
C1003	123AP
C1004	164
C1004A	164
C1005	165
C1005A	165
C1006	199
C1006A	199
C1006B	199
C1006C	199
C1007	123AP
C1008	128
C1008Y	123AP
C1010	199
C1010A	199
C1010B	199
C1010C	199
C1012	154
C1012A	154
C1013	300
C1013C	300
C1013D	300
C1014	300
C1014B	300
C1014C	300
C1014CD	300
C1014D	300
C1014D1	300
C1017	299
C1018	299
C1018B	210
C1023	108
C1023(JAPAN)	107
C1023-0	107
C1023-Y	107
C1023G	107
C1024	175
C1024-D2	175
C1024B	175
C1024C	175
C1024D	175
C1024E	175
C1024F	175
C1025	175
C1025CTV	175
C1026	107
C1026G	107
C1026Y	107
C1027	163A
C1030	280
C1030A	280
C1030B	280
C1030C	280
C1030D	280
C1030P	280
C1032	107
C1032G	107
C1032P	9932
C1032Y	107
C1033	123AP
C1033A	123AP
C1033P	9933
C1035	161
C1035C	161
C1035D	161
C1035E	161
C1035P	9935
C1036	161
C1036P	9936
C1044	161
C1044P	9944
C1045	164
C1045B	164
C1045C	164
C1045D	164
C1045E	164
C1045P	9945
C1045R	164
C1046	165
C1046P	9946
C1047	229
C1047B	229
C1047C	229
C1047D	229
C1047E	229
C1048	154
C1048B	154
C1048C	154
C1048D	154
C1048E	154
C1048F	154
C1050D	162
C1050E	162
C1050F	162
C1051	280
C1051C	280
C1051D	280
C1051E	280
C1051F	280
C1051LC	280
C1051LD	280
C1051LE	280
C1051LF	280
C1052P	9099
C1053P	9093
C1055H	218
C1056	154
C1057P	9157
C1058P	9158
C1059	124
C1060	152
C1060A	152
C1060B	152
C1060BM	152
C1060C	152
C1060D	152
C1061	152
C1061A	152
C1061B	152
C1061C	152
C1061D	152
C1061T	152
C1061T-B	152
C1061TB	152
C1062P	9962
C1070	161
C1071	123AP
C1072	128
C1072A	128
C1079	280
C1079R	280
C1079Y	280
C1080	280
C1080R	280
C1080Y	280
C1086	165
C1086M	165
C1095	186A
C1095L	186A
C1095M	186A
C1096	186A
C1096(M)	186A
C1096-0	186A
C1096-3ZM	186A
C1096A	186A
C1096B	186A
C1096C	186A
C1096D	186A
C1096K	186A
C1096L	186A
C1096M	186A
C1096N	186A
C1096W	186A
C1098	186A
C1098A	186A
C1098B	186A
C1098C	186A
C1098D	186A
C1098L	186A
C1098M	186A
C1100	165
C1101	164
C1101A	164
C1101B	164
C1101C	164
C1101D	164
C1101E	164
C1101F	164
C1101L	164
C1102	124
C1102(M)	124
C1102A	124
C1102B	124
C1102C	124
C1102K	124
C1102L	124
C1102M	124
C1103	154
C1103(A)	154
C1103A	154
C1103B	154
C1103C	154
C1103L	154
C1104	124
C1104A	124
C1104B	124
C1104C	124
C1105	124
C1105A	124
C1105B	124
C1105C	124
C1105K	124
C1105L	124
C1105M	124
C1106	162
C1106A	162
C1106B	162
C1106C	162
C1106K	162
C1106L	162
C1106M	162
C1107Q	186A
C1111	280
C1114	283
C1115	280
C1116	154
C1116-0	154
C1123	107
C1124	190
C1126	107
C1127	171
C1128	161
C1128(3RD-IF)	123AP
C1128(S)	161
C1128C	229
C1128D	123AP
C1129	161
C1129(R)	161
C1151	164
C1151A	164
C1152	162
C1152F	162
C1152G	162
C1153	165
C1154	163A
C1155	190
C1156	190
C1157	190
C1158	108
C1159	107
C1160	175
C1160K	175
C1160L	175
C1161	175
C1162	184
C1162(RF-PWR)	299
C1162A	184
C1162B	184
C1162C	373
C1162C(RF-PWR)	299
C1162CP	184
C1162MP	184
C1162WB	184
C1162WBP	186A
C1162WTB	184
C1162WTC	184
C1162WTD	184
C1166	186
C1166-0	186
C1166D	186
C1166GR	186
C1166R	186
C1166Y	186
C1167	165
C1168	124
C1168X	124
C1170	165
C1170A	165
C1170B	165
C1171	165
C1172	238
C1172A	238
C1172B	238
C1173	152
C1173(RF-PWR)	236
C1173-0	152
C1173-GR	152
C1173-O	152
C1173-R	152
C1173-Y	152
C1173C	152
C1173R	152
C1173X	152
C1173X0	152
C1173Y	152
C1174	165
C1175	123AP
C1175C	123AP
C1175D	123AP
C1175E	123AP
C1175F	123AP
C1182B	161
C1182C	161
C1182D	161
C1184	164
C1184A	164
C1184B	164
C1184C	164
C1184D	164
C1184E	164
C1185	162
C1185A	162
C1185B	162
C1185C	162
C1185H2(IC)	1293
C1185H(IC)	1293
C1185K	162
C1185L	162
C1185M	162
C1187	229
C1187R	123AP
C1195	162
C1204	199
C1204B	199
C1204C	199
C1204D	199
C1205	108
C1205A	108
C1205B	108
C1205C	108
C1209	297
C1209C	297
C1210	287
C1210C	287
C1210D	287
C1210E	287
C1211	293
C1211C	293
C1211D	293
C1211E	293
C1212	184
C1212A	184
C1212AA	184
C1212AB	184
C1212AC	184
C1212AD	184
C1212AWT	184
C1212AWTA	184
C1212AWTB	184
C1212AWTC	184
C1212AWTD	184
C1212B	184
C1212C	184
C1212D	184
C1212WT	184
C1212WTA	184
C1212WTB	184
C1212WTC	184
C1212WTD	184
C1213	289
C1213A	289A
C1213AA	289
C1213AB	289
C1213AC	289A
C1213AD	289
C1213AK	289
C1213AKA	289
C1213AKB	289
C1213AKC	289
C1213AKD	289
C1213B	289
C1213BC	289
C1213C	289A
C1213CD	289
C1213D	289
C1214	289
C1214A	289
C1214B	289
C1214C	289
C1214D	289
C1215	199
C1217	171
C1218	128
C1220E	128
C1222	199
C1222A	199
C1222B	199
C1222C	199
C1222D	199
C1226	186A
C1226-0	186A
C1226A	186A
C1226AC	186A
C1226AO	186A
C1226AP	186A
C1226AQ	186A
C1226AR	186A
C1226C	186A
C1226CF	186A
C1226F	186A
C1226P	186A
C1226Q	186A
C1226QR	186A
C1226R	186A
C1226RL-P	186A
C1235	124
C1237	235
C1237E	236
C1239	237
C1243	300
C1243-24	210
C1243C	300
C1243C1	300
C1243C2	300
C1243D	300
C1243D1	300
C1243D2	300
C1243E	300
C1244	123AP
C1252H2	1794
C1253	2362
C1253H2	1795
C1253T	2362
C1253U	2362
C1260	316
C1278	194
C1278S	194
C1279	194
C1279S	194
C1280	172A
C1280A	172A
C1280AS	172A
C1280S	172A
C1293A(LAST-IF)	123AP
C1293B	123AP
C1295	165
C1295-0	165
C1295A	165
C1303	278
C1304	124
C1304BK	124
C1306	235
C1306I	235
C1307	236
C1308	238
C1308K	238
C1309	165
C1312	199
C1312F	199
C1312G	199
C1312H	199
C1312Y	199
C1312YF	199
C1312YG	199
C1312YH	199
C1313	199
C1313F	199
C1313G	199
C1313H	199
C1313Y	199
C1313YF	199
C1313YG	199
C1313YH	199
C1317	289
C1317B	289
C1317P	289
C1317Q	289
C1317R	289
C1317S	289
C1317T	289
C1318	297
C1318C	297
C1318Q	297
C1318R	297
C1318S	297
C1325	165

PART NUMBER	NTE REPLACEMENT
C1325A	165
C1327	199
C1327FS	199
C1327U	199
C1328	199
C1328T	199
C1328U	199
C1330	192
C1330A	192
C1330B	192
C1330C	192
C1330D	192
C1330L	192
C1330R	192
C1335	199
C1335A	199
C1335B	199
C1335C	199
C1335D	199
C1335E	199
C1335F	199
C1342	289
C1342A	289
C1342B	289
C1342C	289
C1343	280
C1343A	280
C1343B	280
C1343C	280
C1343H	280
C1343HA	280
C1343HB	280
C1344	199
C1344C	199
C1344D	199
C1344E	199
C1344F	199
C1345	199
C1345C	199
C1345F	199
C1346	192
C1346R	192
C1346S	192
C1347	192
C1347Q	192
C1347R	192
C1347S	192
C1348	238
C1353H2	1795
C1356C2	1483
C1358	165
C1358K	165
C1358P	165
C1358Q	165
C1358R	165
C1359	229
C1359A	229
C1359B	229
C1359C	229
C1360	199
C1360A	199
C1361	123AP
C1362	123AP
C1363	123AP
C1363CA	1409
C1364	123AP
C1364-5	85
C1364-7	85
C1364A	123AP
C1366C2	1522
C1367	164
C1367A	164
C1368	184
C1368C	184
C1368D	186A
C1372Y	123
C1373HA	15004
C1377	236
C1382	373
C1382-0	157
C1382-0	157
C1382Y	157
C1383	293
C1383P	293
C1383Q	293
C1383R	293
C1383R/494	192
C1383S	293
C1383X	293
C1384	293
C1384Q	293
C1384R	293
C1384S	293
C1386C	184
C1390A	107
C1390I	123AP
C1390J	123AP
C1390K	123AP
C1390V	123AP
C1390W	123AP
C1390WH	123AP
C1390WI	123AP
C1390WX	123AP
C1390WY	123AP
C1390X	123AP
C1390XJ	123AP
C1390XK	123AP
C1390YM	123AP
C1391	124
C1391VL	124
C1393	123AP
C1394	107
C1396	107
C1398	152
C1398Q	152
C1402	280
C1406HA	1792
C1407	192
C1407P	192
C1407R	192
C1407S	192
C1409	291
C1409A	291
C1409AA	291
C1409AB	291
C1409AC	291
C1409B	291
C1409C	291
C1410	291
C1410A	291
C1410AA	291
C1410AB	291
C1410AC	291
C1410B	291
C1410C	291
C1413	165
C1413A	165
C1415	376
C1416	123A
C1416BL	199
C1417	107
C1417C	107
C1417D	107
C1417D(1)	107
C1417D(U)	107
C1417DU	107
C1417F	107
C1417G	107
C1417H	107
C1417U	107
C1417V	107
C1417VW	107
C1417W	107
C1418	152
C1418A	152
C1418B	152
C1418C	152
C1418D	152
C1419	152
C1419A	152
C1419B	152
C1419C	152
C1419D	152
C1424	316
C1429	188
C1429-1	128
C1429-2	128
C1437	100
C1438	100
C1446	190
C1446B	198
C1446C	198
C1446LB	198
C1446LB11	198
C1446PQ	198
C1446Q	198
C1447-0	198
C1447-0	198
C1447LB	198
C1447R	198
C1448	375
C1448A	375
C1448P	375
C1448Q	375
C1448R	375
C1448S	375
C1449	295
C1450S	152
C1472K	172A
C1473AH	399
C1473AQ	399
C1473AR	399
C1473NCO	399
C1473P	399
C1473Q	399
C1473R	399
C1474HA	1791
C1475	315
C1475-1	315
C1475-2	315
C1475-3	315
C1475-4	315
C1477	283
C1481CA	1801
C1501	288
C1501Q	157
C1501R	157
C1505	198
C1505I	198
C1505K	198
C1505L	198
C1505LA	198
C1505M	198
C1506	198
C1507	198
C1507-0	198
C1507-0(KOREA)	198
C1507A	198
C1507K	198
C1507L	198
C1507LM	198
C1507M	198
C1509	297
C1509P	297
C1509Q	297
C1509R	297
C1509S	297
C1514	376
C1514-14	376
C1514CS	375
C1520	198
C1520-0	198
C1520-1A	198
C1520-3A	198
C1520I	198
C1520K	198
C1520K(JAPAN)	198
C1520KL	198
C1520L	198
C1520M	198
C1521K	198
C1521L	198
C1521LM	198
C1537	199
C1537-3	199
C1537-0	199
C1537B	199
C1537S	199
C1538	199
C1538A	199
C1538S	199
C1538SA	199
C1542	123AP
C1547	316
C1566	157
C1568-R	184
C1569	376
C1569-0	198
C1569-0	198
C1569LBQ	198
C1569LBR	198
C1569LBY	198
C1569R	198
C1572AR	399
C1573	287
C1573A	399
C1573AR	399
C1573BR	399
C1573P	399
C1580A	5594
C1580B	5594
C1580C	5595
C1580D	5595
C1580E	5595
C1580M	5595
C1580N	5596
C1580P	5596
C1580PA	5596
C1580PB	5596
C1580S	5596
C1580T	5596
C1583(TRANS)	42
C1583F(TRANS)	42
C1583H(TRANS)	42
C1588	278
C1627-0	289A
C1627-0(JAPAN)	289A
C1627A-Y	289A
C1627AK	382
C1627AY	289
C1627AY(KOREA)	382
C1627Y	289A
C1627Y(JAPAN)	289A
C1632-5	85
C1632-6	85
C1632-7	85
C1633	199
C1633-5	85
C1633-6	85
C1633-7	85
C1634-5	85
C1634-6	85
C1634-7	85
C1639	123AP
C1648	199
C1658Q	194
C1664	274
C1664(TRANS)	57
C1664A	57
C1664O	274
C1664R	274
C1667	284
C1670	190
C1670MC	287
C1670MJ	287
C1674	108
C1674-0	108
C1674-0	108
C1674K	107
C1674L	107
C1674M	229
C1674R	108
C1675	229
C1675K	229
C1675L	229
C1675M	229
C1678	235
C1679	235
C1681BL	199
C1681G	199
C1683P	375
C1683Q	375
C1684	199
C1684R	289A
C1685	194
C1685P	194
C1685Q	85
C1685R	85
C1685S	194
C1686	229
C1687	123AP
C1688	123AP
C1728	302
C1728-3	302
C1728D	302
C1730K	107
C1735C(BCE)	289A
C1735D(BCE)	289A
C1739	123AP
C1740	85
C1740E	85
C1740R	85
C1740RZ	85
C1740S	85
C1740SEJ	85
C1740SRS	85
C1740SSJ	85
C1740SSK	85
C1741P	85
C1741R	289A
C1755	198
C1755A	198
C1755C	198
C1756	198
C1756A	198
C1756C	198
C1756D	376
C1756K	198
C1757	198
C1760	306
C1760-3	306
C1815	85
C1815-0	85
C1815-0(KOREA)	85
C1815-0	85
C1815-0FA	85
C1815-Y	85
C1815BL	85
C1815GR	85
C1815Y	85
C1815Y(KOREA)	85
C1816	236
C1826	196
C1826(JAPAN)	196
C1826G	196
C1828	175
C1846-R	295
C1856	108
C1865	379
C1875	389
C1885R	399
C1890A	90
C1890AD	90
C1890AE	90
C1890C	90
C1905LB	198
C1906	107
C1908E	107
C1909	235
C1914A	90
C1921	399
C1923Y	107
C1941	399
C1942	389
C1957	295
C1959-0	85
C1959Y	85
C1964	236
C1974	235
C1975	235
C1980R	90
C1983	56
C1983(TRANS)	56
C1984(TRANS)	56
C1985	196
C1986	331
C2001K	85
C2001L	85
C2002L	85
C2003K	85
C2021Q	16
C2021R	16
C2021RG	85
C2021RJ	85
C2058S	85
C2060Q	293
C2061	297
C2065P	5534
C2068	376
C2068I	376
C2068LBBK	198
C2073	375
C2073(KOREA)	375
C2073D	375
C2073LB	375
C2073LBGL	375
C2073RD	375
C2073RE	375
C2107B	2107
C2120-0	289A
C2120-0	289A
C2120FA	399
C2120Y	289A
C2120Y(KOREA)	289A
C2188	16001
C2206C	85
C2209R	184
C2228AD	399
C2228AE	399
C2228E	399
C2228M	399
C2229	399
C2229(KOREA)	399
C2229-0	399
C2229-O	399
C2229FA	399
C2229KOREA	399
C2229M	399
C2229Y	399
C2229Y(KOREA)	399
C2230A	399
C2230A-GR	399
C2230AGR	399
C2230AY	399
C2230AY(KOREA)	399
C2230GR	399
C2233	51
C2236-0	382
C2236=0	382
C2236Y	382
C2242BK	376
C2259(TRANS)	40
C2259F(TRANS)	40
C2259G(TRANS)	40
C2259H(TRANS)	40
C2271D	399
C2271E	399
C2271M	399
C2271MN	399
C2291(TRANS)	44
C2291F(TRANS)	44
C2291G(TRANS)	44
C2291H(TRANS)	44
C2300.037-096	123AP
C2310-0	399
C2320	85
C2320(JAPAN)	85
C2330-0	399
C2330Y	399
C2331	24
C2331-0	24
C2331-0	24
C2335	379
C2362KF	199
C2371L	157
C2371M	157
C2373L	379
C2377-C	15
C2383-0	31
C2383-0	31
C2383R	31
C2383Y	31
C2388A(TRANS)	53
C2406	552
C2406M	552
C2429(TRANS)	53
C2458GR	85
C2458Y	85
C2481	373
C2482	399
C2482(KOREA)	399
C2482-1	399
C2482BK	399
C2482K	399
C2482KOREA	399
C2483Y	186A
C2484P	390
C2501	379
C2501(JAPAN)	379
C2502R	375
C2504(DIODE)	552
C2506(RECT)	552
C2525-B	92
C2525-G	92
C2525B	92
C2525G	92
C2528(TRANS)	54
C2538-11	123AP
C2542	379
C2551-0	399
C2551-0	399
C2551R	399
C2555	2308
C2564(TRANS)	33
C2564Y(TRANS)	33
C2565(TRANS)	33
C2565R(TRANS)	33
C2565Y(TRANS)	33
C2568	157
C2568KD	157
C2568LD(JAPAN)	157
C2570AE	10
C2577	36
C2578	36
C2579	36
C2587(TRANS)	33
C2588(TRANS)	33
C2590	373
C2590-P	373
C2590-Q	373
C2590-R	373
C2590-S	373
C2590P	373
C2590Q	373
C2590R	373
C2590S	373
C2610	399
C2610B(JAPAN)	399
C2610BK	399
C2610Y	399
C2611	157
C2612	379
C2613	379
C2615A	558
C2621D	157
C2621E	157
C2634S	199
C2647C	85
C2653(H)	198
C2653H	198
C2653HLB	171
C2655-0	293
C2655Y	293
C2688A	157
C2688KA	157
C2688LA	157
C2708	2708
C2716	2716
C2716-35	2716
C2717FA	229
C2719	289A
C2719L	289A
C2722(TRANS)	33
C2732	2732A
C2732A	2732A
C2738(TRANS)	51
C2773(TRANS)	58
C2774(TRANS)	58
C2785	85
C2785E	85
C2785F	85
C2785H	85
C2785J	85
C2827	379
C2837(TRANS)	36
C2838(TRANS)	33
C2878A	85
C2878B	85
C2878B(JAPAN)	85
C2901L	123AP
C2914(TRANS)	53
C2920(TRANS)	53
C2921(TRANS)	33
C2922(TRANS)	58
C2929(TRANS)	51
C2939	2311
C2960E	2361
C2960F	2361
C2960G	2361
C2964(TRANS)	53
C2965(TRANS)	53
C2971(TRANS)	53
C2979	2325
C2987(TRANS)	36
C3000D	85
C3000P	7400
C3001	1192
C3001-0	1192
C3001-0	1192
C3001A	1192
C3001M	1192
C3001P	7401
C3001T	1192
C3002P	7402
C3004P	7404
C3010P	7410
C3012(TRANS)	36
C3020P	7420
C3030P	7430
C3038	51
C3038(TRANS)	51
C3040P	7440
C3041(TRANS)	53
C3041L(HEP)	7441
C3041P	7441
C3043(TRANS)	53
C3044(TRANS)	52
C3044A(TRANS)	52
C3045(TRANS)	53
C3046(TRANS)	53
C3050P	7450
C3063	157
C3073P	7473
C3075P	7475
C3114T(JAPAN)	289A
C3116T	373
C3123	108
C3135	2361
C3135S	2361
C3135T	2361
C3135U	2361
C3175	379
C3271N	157
C3292	2332
C3293	2332
C3294	2332
C3299Y	377
C3306	2308
C3310(JAPAN)	379
C3330S	2361
C3330T	2361
C3330U	2361
C3331	293
C3331T	293
C3334	399
C3387	2301
C3393	2361
C3393R	2361
C3393S	2361
C3393T	2361
C3393U	2361
C3460	2300
C3505	2309
C3619	157
C3621	373
C3708S	382
C3710	123AP
C3712N	157
C3789D	157
C3789E	157
C3800P	7490
C3801P	7492
C3833	2311
C3890	379
C3902S	373
C4011	137A
C4015	139A
C4016	140A
C4018	142A
C4020	145A
C4026	146A
C4059	2311
C4108	2311
C4159E	54
C4169	2338
C4217E	157
C4242	2312
C4558C	778A
C5005	109
C5359	108
C5620	129
C6001	760
C6007	754
C6015	5018A
C6019	754
C6055L	725
C6056P	722
C6059P	746
C6061P	750
C6062P	708
C6063P	712
C6069G	780
C6070P	714
C6072	739
C6072P	739
C6075P	738
C6076P	749
C6079P	747
C6080P	721
C6082P	708
C6083P	712
C6085P	731
C6090	804
C6096P	801
C6100P	783
C6101P	723
C6103P	909
C6644H	199
C6961	224
C7076	199
C7335-BL	123AP
C7350RN	123AP
C7445P(HEP)	7445
C7446AP(HEP)	7446
C7447AP(HEP)	7447
C7448P(HEP)	7448
C7840	229
C8080A	8080A
C9014A	123AP
C9080	129
C9081	129
C9082	159
C9083	159
C9084	159
C9085	159
C9426	108
C9604	123AP
C9634	108
C10110	116
C10159	116
C10176	116
C10215-2	160
C10227	102A
C10230-3	102A
C10258	160
C10260	160
C10261	160
C10262	160
C10279-1	123AP
C10279-3	123AP
C10291	126
C10963ZM	186A
C10964ZL	186A
C11021	102A
C11660	186
C12711	123AP
C12712	128
C12923	128
C12924	128
C12925	123AP
C12926	128
C13061	235
C13390	123AP
C13391	123AP
C13391A	123AP
C13392	128
C13393	128
C13394	128
C13398	128
C13901	123AP
C14256	123AP
C15730	399
C17405SRS	85
C18260	196
C19230	229
C19860	331
C21382	116
C21383	139A
C21480	109
C23018	519
C23830	31
C26550(JAPAN)	293
C33725	123AP
C36577	129
C36578	161
C36579	128
C36580	123AP
C36583	152

PART NUMBER	NTE REPLACEMENT
C41001	129
C44189	910
C51909B	159
C74141P(HEP)	74141
C74145P(HEP)	74145
C74162AP	74162
C139000	128
C139000A	128
C248507	116
C255110-011	177
C256125-011	519
C523383	123AP
C1107832P7	113A
C1107832P9	113A
C1945295DY1	123AP
C2475078-3	108
C2485076-3	128
C2485077-2	128
C2485078-1	108
C2485079-1	108
C6141990	177
C6862400	123AP
C532000585	234
C-2C	506
C-6BX212	6401
C-10	113A
C-10-20A	178MP
C-505	177
C-555A	703
C-4401	177
C-36582	133
C-F8	224
CA081E	857M
CA0358T	928
CA2D2	102A
CA10	116
CA20	116
CA31S3M1	984
CA50	116
CA90	177
CA100	116
CA101T	1171
CA102BA	116
CA102DA	116
CA102FA	116
CA102HA	116
CA102MA	116
CA102PA	125
CA102RA	125
CA102VA	125
CA150	116
CA152VA	125
CA200	116
CA201T	1171
CA224E	987
CA224G	987
CA239	834
CA239A	834
CA239AE	834
CA239AG	834
CA239E	834
CA239G	834
CA250	116
CA301AE	975
CA301AG	975
CA301AS	1171
CA301AT	1171
CA301E	975
CA301G	975
CA301T	1171
CA306S	712
CA307	976
CA307E	976
CA307G	976
CA311E	922M
CA311T	922
CA324E	987
CA324G	987
CA339	834
CA339A	834
CA339AE	834
CA339AG	834
CA339E	834
CA339G	834
CA344V1	955M
CA358T	928
CA555CE	955M
CA555CG	955M
CA555E	955M
CA555G	955M
CA723	923
CA723CE	923D
CA723CT	923
CA723E	923D
CA723T	923
CA741	941M
CA741C	941M
CA741CE	941M
CA741CG	941M
CA741CS	941M
CA741CT	941
CA741E	941M
CA741G	941M
CA741S	909
CA747CE	947D
CA747CF	947D
CA747CG	947D
CA747CT	947
CA747E	947D
CA747F	947D
CA747G	947D
CA747T	947
CA758E	743
CA810M	1115
CA810Q	1115A
CA1020A	116
CA1190GQ/M	1231
CA1310	801
CA1310E	801
CA1352	749
CA1352E	749
CA1365	712
CA1391E	815
CA1394E	836
CA1398	738
CA1398E	738
CA1458E	778A
CA1458F	778A
CA1458G	778A
CA1458S	778A
CA2002	1232
CA2002V	1232
CA2004	1374
CA2065	712
CA2111	708
CA2111A	708
CA2111AE	708
CA2111AQ	708
CA2111E	708
CA3010	903
CA3010A	903
CA3010AT	903
CA3010T	903
CA3011	726
CA3011T	726
CA3012	726
CA3012T	726
CA3013	704
CA3013S	704
CA3013T	1188
CA3014	704
CA3014S	704
CA3014T	1188
CA3015	903
CA3015A	903
CA3015AT	903
CA3015T	903
CA3018	904
CA3018A	904
CA3018T	904
CA3019	905
CA3019T	905
CA3020	784
CA3020A	784
CA3020AT	784
CA3020B	784
CA3020T	784
CA3026	906
CA3026T	906
CA3028	724
CA3028A	724
CA3028B	724
CA3029	908
CA3029A	908
CA3029E	908
CA3030	908
CA3030A	908
CA3030AE	908
CA3030E	908
CA3037	908
CA3037A	908
CA3037AE	908
CA3037E	908
CA3038	908
CA3038A	908
CA3038AE	908
CA3038E	908
CA3039	907
CA3039T	907
CA3044	711
CA3044T	711
CA3044V	711
CA3044V1	711
CA3045	912
CA3045E	912
CA3045F	912
CA3045L	912
CA3046	912
CA3046E	912
CA3048	727
CA3049	906
CA3049T	906
CA3052	727
CA3052E	727
CA3054	917
CA3054E	917
CA3056	941
CA3056AE	914
CA3058	914
CA3058E	914
CA3059	914
CA3059E	914
CA3064	780
CA3064/5A	780
CA3064E	783
CA3064T	780
CA3065	712
CA3065/7F	712
CA3065,RCA	712
CA3065C	712
CA3065D	712
CA3065E	712
CA3065F	712
CA3065FC	712
CA3065PC	712
CA3065RCA	712
CA3068	730
CA3070	714
CA3070E	714
CA3070G	714
CA3071	715
CA3071E	715
CA3072	713
CA3072E	713
CA3075	723
CA3075D	723
CA3075E	723
CA3079	914
CA3079E	914
CA3080	902
CA3080A	902
CA3080AE	996
CA3080E	996
CA3080S	902
CA3080T	902
CA3081	916
CA3081E	916
CA3082	2023
CA3083	929
CA3083E	929
CA3086	912
CA3086E	912
CA3088E	787
CA3089	788
CA3089E	788
CA3089F	788
CA3090	789
CA3090AQ	789
CA3090E	789
CA3090Q	789
CA3100T	871
CA3120	731
CA3120E	731
CA3121	791
CA3121E	791
CA3121EG	791
CA3121G	791
CA3123	744
CA3123E	744
CA3126	797
CA3126EM	797
CA3126EM1	797
CA3126EMI	797
CA3126FM1	797
CA3126Q	797
CA3130	930
CA3130AT	930
CA3130T	930
CA3135E	818
CA3135G	818
CA3136	843
CA3136E	843
CA3136P	843
CA3137	1176
CA3137E	1176
CA3137EM	1176
CA3137EM1	1176
CA3137Q	1176
CA3139	1174
CA3139E	1174
CA3139G	1174
CA3139GHI	1174
CA3139GM1	1174
CA3139GQ	1174
CA3139Q	1174
CA3142	731
CA3142E	731
CA3143	1177
CA3143E	1177
CA3144E	985
CA3145	743
CA3151E	986
CA3151G	986
CA3151GM1	986
CA3151GMI	986
CA3151GMT	986
CA3152	867
CA3152E	867
CA3153	984
CA3153E	984
CA3153G	984
CA3153GM1	984
CA3153GMI	984
CA3153MI	984
CA3154	701
CA3154E	701
CA3156	822
CA3158	700
CA3158E	700
CA3161	2032
CA3161E	2032
CA3162	2054
CA3162E	2054
CA3166	850
CA3166E	850
CA3168	2024
CA3168E	2024
CA3170	982
CA3170E	982
CA3172	821
CA3172E	821
CA3172G	821
CA3177	863
CA3177E	863
CA3189	7016
CA3189E	7016
CA3191	842
CA3191E	842
CA3192E	841
CA3196-Q	1174
CA3210	868
CA3210E	868
CA3217	844
CA3217E	844
CA3218	1739
CA3218E	1739
CA3234	873
CA3234E	873
CA3236	874
CA3236E	874
CA3237	1682
CA3289E	788
CA3401	992
CA3401E	992
CA3458	877
CA3524	1720
CA3524E	1720
CA3539	908
CA3545	907
CA3741	941
CA3741CE	941M
CA3741CS	941
CA3741CT	941
CA3741E	941M
CA3741S	941
CA3741T	941
CA3747CT	947
CA3748CT	1171
CA3909	876
CA3909E	876
CA6664	116
CA6665	116
CA7248	116
CA8314	116
CA30516M1	986
CA30806W	902
CA30900	789
CA31516	986
CA31536M1	984
CA-092	139A
CA-90	109
CA-3088E	787
CA-3089E	788
CA-9011H	123AP
CAC5028A	107
CAM-12	123AP
CB1F4	105
CB5	116
CB10	116
CB20	116
CB22A25V12FD	5700
CB22A25V24FD	5700
CB32A25V12	5702
CB32A25V24	5702
CB50	116
CB100	156
CB103	126
CB104	102
CB106	109
CB150	116
CB156	160
CB157	126
CB158	126
CB161	102A
CB163	109
CB200	116
CB244	160
CB246	123AP
CB248	102A
CB249	102A
CB250	116
CB254	160
CB393	109
CB-103	100
CB-393	109
CC102BA	116
CC102DA	116
CC102FA	116
CC102HA	116
CC102KA	116
CC102MA	116
CC102PA	125
CC102RA	125
CC102VA	125
CC152VA	125
CC1168F	123AP
CC59018F	123AP
CCJ5212	123AP
CCS1235G	123AP
CCS2001H	123AP
CCS2004	123AP
CCS2004B	199
CCS2004D303	199
CCS2005B	159
CCS2006D	108
CCS2008F015	108
CCS4004	123AP
CCS6168	123AP
CCS6168F	123AP
CCS6168G	128
CCS6225F	161
CCS6226G	161
CCS6227F	161
CCS6228F	159
CCS6229H	128
CCS9015	159
CCS9016D	108
CCS9016E	108
CCS9017	161
CCS9017G925	161
CCS9018E	123AP
CCS9018F	108
CCS9018H924	161
CCS-2006D	123AP
CD0000	109
CD0000/7825B	109
CD0000NC	177
CD000	109
CD0014	177
CD0014(MORSE)	177
CD0014NA	123AP
CD0014NG	123AP
CD0015N	123AP
CD0021	123AP
CD0033	137A
CD0120	136A
CD05	116
CD07	120
CD2	116
CD4	116
CD24	177
CD31-00002	134A
CD31-00006	135A
CD31-00007	136A
CD31-00008	137A
CD31-00012	139A
CD31-00015	142A
CD31-00017	145A
CD31-00023	146A
CD31-00025	147A
CD31-10361	146A
CD31-10365	145A
CD31-12019	139A
CD31-12022	142A
CD31-12024	145A
CD31-12030	146A
CD31-12032	147A
CD31-12039	139A
CD37	177
CD37A	177
CD37A2	116
CD38	123AP
CD48	136A
CD73/187/72	7493A
CD73/187/73	74H30
CD101	109
CD437	159
CD441	199
CD445	159
CD446	123AP
CD461	130
CD461-014-614	130
CD500	234
CD522	218
CD541	909
CD562	199
CD1090	5722
CD1111	116
CD1112	116
CD1113	116
CD1114	116
CD1115	116
CD1116	116
CD1117	116
CD1121	116
CD1122	116
CD1123	116
CD1124	116
CD1125	116
CD1126	116
CD1127	116
CD1141	116
CD1142	116
CD1143	116
CD1147	116
CD1148	116
CD1149	116
CD1151	116
CD1224	177
CD2300E	9930
CD2300E/830	9930
CD2301E	9961
CD2301E/861	9961
CD2302E	9946
CD2302E/846	9946
CD2303E	9949
CD2303E/849	9949
CD2304E	9945
CD2304E/845	9945
CD2305E	9948
CD2305E/848	9948
CD2306E	9932
CD2306E/832	9932
CD2307E	9944
CD2307E/844	9944
CD2308E	9962
CD2308E/862	9962
CD2309E	9963
CD2309E/863	9963
CD2310E	9936
CD2310E/836	9936
CD2311E/837	9937
CD2312E	9935
CD2314E	9933
CD2314E/833	9933
CD2315E	9093
CD2318E	9099
CD3122	135A
CD3171	149A
CD3174	150A
CD4000	4000
CD4000A	4000
CD4000AD	4000
CD4000AE	4000
CD4000AF	4000
CD4000AZ	4000
CD4000B	4000
CD4000BD	4000
CD4000BE	4000
CD4000BF	4000
CD4000C	4000
CD4000CJ	4000
CD4000CN	4000
CD4000M	4000
CD4000MJ	4000
CD4000MW	4000
CD4000UB	4000
CD4000UBD	4000
CD4000UBE	4000
CD4000UBF	4000
CD4001	4001B
CD4001A	4001B
CD4001AC	4001B
CD4001AD	4001B
CD4001AE	4001B
CD4001AF	4001B
CD4001AM	4001B
CD4001B	4001B
CD4001BC	4001B
CD4001BCJ	4001B
CD4001BCN	4001B
CD4001BD	4001B
CD4001BE	4001B
CD4001BF	4001B
CD4001BM	4001B
CD4001BMJ	4001B
CD4001BMW	4001B
CD4001CJ	4001B
CD4001CN	4001B
CD4001MJ	4001B
CD4001MW	4001B
CD4001UB	4001B
CD4001UBD	4001B
CD4001UBE	4001B
CD4001UBF	4001B
CD4002	4002B
CD4002A	4002B
CD4002AC	4002B
CD4002AD	4002B
CD4002AE	4002B
CD4002AF	4002B
CD4002AM	4002B
CD4002B	4002B
CD4002BD	4002B
CD4002BE	4002B
CD4002BF	4002B
CD4002CJ	4002B
CD4002CN	4002B
CD4002MJ	4002B
CD4002MW	4002B
CD4002UB	4002B
CD4002UBD	4002B
CD4002UBE	4002B
CD4002UBF	4002B
CD4006	4006B
CD4006A	4006B
CD4006AC	4006B
CD4006AE	4006B
CD4006AM	4006B
CD4006B	4006B
CD4006BE	4006B
CD4007	4007
CD4007A	4007
CD4007AE	4007
CD4007C	4007
CD4007M	4007
CD4007UB	4007
CD4007UBE	4007
CD4008	4008B
CD4008A	4008B
CD4008AD	4008B
CD4008AE	4008B
CD4008AF	4008B
CD4008B	4008B
CD4008BC	4008B
CD4008BCJ	4008B
CD4008BCN	4008B
CD4008BD	4008B
CD4008BE	4008B
CD4008BF	4008B
CD4008BM	4008B
CD4008BMJ	4008B
CD4008BMW	4008B
CD4009	4009
CD4009AE	4049
CD4011	4011B
CD4011A	4011B
CD4011AC	4011B
CD4011AD	4011B
CD4011AE	4011B
CD4011AF	4011B
CD4011AM	4011B
CD4011B	4011B
CD4011BC	4011B
CD4011BCJ	4011B
CD4011BCN	4011B
CD4011BD	4011B
CD4011BE	4011B
CD4011BF	4011B
CD4011BM	4011B
CD4011BMJ	4011B
CD4011BMW	4011B
CD4011CJ	4011B
CD4011CN	4011B
CD4011MJ	4011B
CD4011MW	4011B
CD4011UB	4011B
CD4011UBD	4011B
CD4011UBE	4011B
CD4011UBF	4011B
CD4012	4012B
CD4012A	4012B
CD4012AC	4012B
CD4012AD	4012B
CD4012AE	4012B
CD4012AF	4012B
CD4012AM	4012B
CD4012B	4012B
CD4012BD	4012B
CD4012BE	4012B
CD4012BF	4012B
CD4012CJ	4012B
CD4012CN	4012B
CD4012MJ	4012B
CD4012MW	4012B
CD4012UB	4012B
CD4012UBD	4012B
CD4012UBE	4012B
CD4012UBF	4012B
CD4013	4013B
CD4013A	4013B
CD4013AD	4013B
CD4013AE	4013B
CD4013AF	4013B
CD4013B	4013B
CD4013BC	4013B
CD4013BCJ	4013B
CD4013BCN	4013B
CD4013BD	4013B
CD4013BE	4013B
CD4013BF	4013B
CD4013BM	4013B
CD4013BMJ	4013B
CD4013BMW	4013B
CD4014A	4014B
CD4014AC	4014B
CD4014AE	4014B
CD4014AM	4014B
CD4014B	4014B
CD4014BE	4014B
CD4015	4015B
CD4015A	4015B
CD4015AC	4015B
CD4015AE	4015B
CD4015AM	4015B
CD4015B	4015B
CD4015BE	4015B
CD4016	4016B
CD4016A	4016B
CD4016AE	4016B
CD4016B	4016B
CD4016BC	4016B
CD4016BE	4016B
CD4016BM	4016B
CD4017	4017B
CD4017A	4017B
CD4017AD	4017B
CD4017AE	4017B
CD4017AF	4017B
CD4017B	4017B
CD4017BC	4017B
CD4017BCJ	4017B
CD4017BCN	4017B
CD4017BD	4017B
CD4017BE	4017B
CD4017BF	4017B
CD4017BM	4017B
CD4017BMJ	4017B
CD4017BMW	4017B
CD4018	4018B
CD4018A	4018B
CD4018AD	4018B
CD4018AE	4018B
CD4018AF	4018B
CD4018B	4018B
CD4018BC	4018B
CD4018BCJ	4018B
CD4018BCN	4018B
CD4018BD	4018B
CD4018BE	4018B
CD4018BF	4018B
CD4018BM	4018B
CD4018BMJ	4018B
CD4018BMW	4018B
CD4019	4019B
CD4019AE	4019B
CD4019BC	4019B
CD4019BCJ	4019B
CD4019BCN	4019B
CD4019BE	4019B
CD4019BM	4019B
CD4020	4020B
CD4020A	4020B
CD4020AD	4020B
CD4020AE	4020B
CD4020AF	4020B
CD4020B	4020B
CD4020BC	4020B
CD4020BCJ	4020B
CD4020BCN	4020B
CD4020BD	4020B
CD4020BE	4020B
CD4020BF	4020B
CD4020BM	4020B
CD4020BMJ	4020B
CD4020BMW	4020B
CD4021	4021B
CD4021A	4021B
CD4021AC	4021B
CD4021AE	4021B
CD4021AM	4021B
CD4021B	4021B
CD4021BE	4021B
CD4022A	4022B
CD4022AD	4022B
CD4022AE	4022B
CD4022AF	4022B
CD4022B	4022B

PART NUMBER	NTE REPLACEMENT
CD4022BC	4022B
CD4022BCJ	4022B
CD4022BCN	4022B
CD4022BD	4022B
CD4022BE	4022B
CD4022BF	4022B
CD4022BM	4022B
CD4022BMJ	4022B
CD4022BMW	4022B
CD4023	4023B
CD4023A	4023B
CD4023AE	4023B
CD4023AF	4023B
CD4023B	4023B
CD4023BC	4023B
CD4023BCJ	4023B
CD4023BCN	4023B
CD4023BD	4023B
CD4023BE	4023B
CD4023BF	4023B
CD4023BM	4023B
CD4023BMJ	4023B
CD4023BMW	4023B
CD4023C	4023B
CD4023CJ	4023B
CD4023CN	4023B
CD4023MJ	4023B
CD4023MW	4023B
CD4023UB	4023B
CD4023UBD	4023B
CD4023UBE	4023B
CD4023UBF	4023B
CD4024	4024B
CD4024A	4024B
CD4024AD	4024B
CD4024AE	4024B
CD4024AF	4024B
CD4024B	4024B
CD4024BC	4024B
CD4024BCJ	4024B
CD4024BCN	4024B
CD4024BD	4024B
CD4024BE	4024B
CD4024BF	4024B
CD4024BM	4024B
CD4024BMJ	4024B
CD4024BMW	4024B
CD4025	4025B
CD4025A	4025B
CD4025AC	4025B
CD4025AD	4025B
CD4025AE	4025B
CD4025AF	4025B
CD4025AM	4025B
CD4025B	4025B
CD4025BC	4025B
CD4025BCJ	4025B
CD4025BCN	4025B
CD4025BD	4025B
CD4025BE	4025B
CD4025BF	4025B
CD4025BM	4025B
CD4025BMJ	4025B
CD4025BMW	4025B
CD4025CJ	4025B
CD4025CN	4025B
CD4025MJ	4025B
CD4025MW	4025B
CD4025UB	4025B
CD4025UBD	4025B
CD4025UBE	4025B
CD4025UBF	4025B
CD4026BD	4026B
CD4026BE	4026B
CD4027	4027B
CD4027A	4027B
CD4027AD	4027B
CD4027AE	4027B
CD4027AF	4027B
CD4027B	4027B
CD4027BC	4027B
CD4027BCJ	4027B
CD4027BCN	4027B
CD4027BD	4027B
CD4027BE	4027B
CD4027BF	4027B
CD4027BM	4027B
CD4027BMJ	4027B
CD4027BMW	4027B
CD4028	4028B
CD4028A	4028B
CD4028AD	4028B
CD4028AE	4028B
CD4028AF	4028B
CD4028B	4028B
CD4028BC	4028B
CD4028BCJ	4028B
CD4028BCN	4028B
CD4028BD	4028B
CD4028BE	4028B
CD4028BF	4028B
CD4028BM	4028B
CD4028BMJ	4028B
CD4028BMW	4028B
CD4029	4029B
CD4029A	4029B
CD4029AD	4029B
CD4029AE	4029B
CD4029AF	4029B
CD4029B	4029B
CD4029BC	4029B
CD4029BCJ	4029B
CD4029BCN	4029B
CD4029BD	4029B
CD4029BE	4029B
CD4029BF	4029B
CD4029BM	4029B
CD4029BMJ	4029B
CD4029BMW	4029B
CD4030	4030B
CD4030AD	4030B
CD4030AE	4030B
CD4030AF	4030B
CD4030BD	4030B
CD4030BE	4030B
CD4030BF	4030B
CD4030CJ	4030B
CD4030CN	4030B
CD4030MJ	4030B
CD4030MW	4030B
CD4031B	4031B
CD4031BD	4031B
CD4031BE	4031B
CD4031BF	4031B
CD4032AE	4032B
CD4032B	4032B
CD4032BE	4032B
CD4034A	4034B
CD4034AE	4034B
CD4034B	4034B
CD4034BC	4034B
CD4034BE	4034B
CD4034BM	4034B
CD4035A	4035B
CD4035AE	4035B
CD4035B	4035B
CD4035BC	4035B
CD4035BE	4035B
CD4035BM	4035B
CD4038AE	4038B
CD4038B	4038B
CD4038BE	4038B
CD4040	4040B
CD4040A	4040B
CD4040AD	4040B
CD4040AE	4040B
CD4040AF	4040B
CD4040B	4040B
CD4040BCJ	4040B
CD4040BCN	4040B
CD4040BD	4040B
CD4040BE	4040B
CD4040BF	4040B
CD4040BM	4040B
CD4040BMJ	4040B
CD4040BMW	4040B
CD4041AE	4041
CD4041C	4041
CD4041M	4041
CD4041UB	4041
CD4041UBE	4041
CD4042A	4042B
CD4042AD	4042B
CD4042AE	4042B
CD4042AF	4042B
CD4042B	4042B
CD4042BC	4042B
CD4042BCJ	4042B
CD4042BCN	4042B
CD4042BD	4042B
CD4042BE	4042B
CD4042BF	4042B
CD4042BM	4042B
CD4042BMJ	4042B
CD4042BMW	4042B
CD4043	4043B
CD4043A	4043B
CD4043AC	4043B
CD4043AD	4043B
CD4043AE	4043B
CD4043AF	4043B
CD4043AM	4043B
CD4043B	4043B
CD4043BD	4043B
CD4043BE	4043B
CD4043BF	4043B
CD4043CJ	4043B
CD4043CN	4043B
CD4043MJ	4043B
CD4043MW	4043B
CD4044AD	4044B
CD4044AE	4044B
CD4044AF	4044B
CD4044B	4044B
CD4044BD	4044B
CD4044BE	4044B
CD4044BF	4044B
CD4044CJ	4044B
CD4044CN	4044B
CD4044MJ	4044B
CD4044MW	4044B
CD4045A	4045B
CD4045AE	4045B
CD4045B	4045B
CD4045BD	4045B
CD4045BE	4045B
CD4045BF	4045B
CD4046	4046B
CD4046A	4046B
CD4046AE	4046B
CD4046B	4046B
CD4046BC	4046B
CD4046BD	4046B
CD4046BE	4046B
CD4046BM	4046B
CD4047	4047B
CD4047A	4047B
CD4047AE	4047B
CD4047B	4047B
CD4047BC	4047B
CD4047BE	4047B
CD4047BM	4047B
CD4048AE	4048B
CD4048B	4048B
CD4048BCJ	4048B
CD4048BCN	4048B
CD4048BE	4048B
CD4049	4049
CD4049A	4049
CD4049AE	4049
CD4049CN	4049
CD4049N	4049
CD4049UB	4049
CD4049UBC	4049
CD4049UBE	4049
CD4049UBM	4049
CD4050A	4050B
CD4050AE	4050B
CD4050B	4050B
CD4050BC	4050B
CD4050BCN	4050B
CD4050BE	4050B
CD4050BEXV	4050B
CD4050BM	4050B
CD4051	4051B
CD4051B	4051B
CD4051BC	4051B
CD4051BE	4051B
CD4051BEXV	4051B
CD4051BM	4051B
CD4052B	4052B
CD4052BC	4052B
CD4052BE	4052B
CD4052BM	4052B
CD4053B	4053B
CD4053BC	4053B
CD4053BCN	4053B
CD4053BE	4053B
CD4053BM	4053B
CD4055AE	4055B
CD4055B	4055B
CD4055BE	4055B
CD4056B	4056B
CD4056BD	4056B
CD4056BE	4056B
CD4056BF	4056B
CD4060	4060B
CD4060A	4060B
CD4060AD	4060B
CD4060AE	4060B
CD4060AF	4060B
CD4060B	4060B
CD4060BC	4060B
CD4060BCJ	4060B
CD4060BCN	4060B
CD4060BD	4060B
CD4060BE	4060B
CD4060BF	4060B
CD4060BH	4060B
CD4060BM	4060B
CD4060BMJ	4060B
CD4060BMW	4060B
CD4063B	4063B
CD4063BD	4063B
CD4063BE	4063B
CD4063BF	4063B
CD4066	4066B
CD4066A	4066B
CD4066AE	4066B
CD4066B	4066B
CD4066BC	4066B
CD4066BE	4066B
CD4066BM	4066B
CD4066CN	4066B
CD4067B	4067B
CD4067BD	4067B
CD4067BE	4067B
CD4067BF	4067B
CD4068B	4068B
CD4068BD	4068B
CD4068BE	4068B
CD4068BF	4068B
CD4069	4069
CD4069BE	4069
CD4069BF	4068B
CD4069C	4069
CD4069CN	4069
CD4069M	4069
CD4069UB	4069
CD4069UBE	4069
CD4070	4070B
CD4070B	4070B
CD4070BC	4070B
CD4070BE	4070B
CD4070BM	4070B
CD4071	4071B
CD4071B	4071B
CD4071BC	4071B
CD4071BCJ	4071B
CD4071BCN	4071B
CD4071BD	4071B
CD4071BE	4071B
CD4071BF	4071B
CD4071BM	4071B
CD4071BMJ	4071B
CD4071BMW	4071B
CD4072	4072B
CD4072B	4072B
CD4072BD	4072B
CD4072BE	4072B
CD4072BF	4072B
CD4073B	4073B
CD4073BC	4073B
CD4073BCJ	4073B
CD4073BCN	4073B
CD4073BD	4073B
CD4073BE	4073B
CD4073BF	4073B
CD4073BM	4073B
CD4073BMJ	4073B
CD4073BMW	4073B
CD4075B	4075B
CD4075BC	4075B
CD4075BCN	4075B
CD4075BD	4075B
CD4075BE	4075B
CD4075BF	4075B
CD4075BM	4075B
CD4075BMJ	4075B
CD4075BMW	4075B
CD4076B	4076B
CD4076BC	4076B
CD4076BE	4076B
CD4076BM	4076B
CD4077B	4077B
CD4077BD	4077B
CD4077BE	4077B
CD4077BF	4077B
CD4078	4078B
CD4078B	4078B
CD4078BD	4078B
CD4078BE	4078B
CD4078BF	4078B
CD4081	4081B
CD4081B	4081B
CD4081BC	4081B
CD4081BCJ	4081B
CD4081BCN	4081B
CD4081BD	4081B
CD4081BE	4081B
CD4081BF	4081B
CD4081BM	4081B
CD4081BMJ	4081B
CD4081BMW	4081B
CD4082	4082B
CD4082B	4082B
CD4082BD	4082B
CD4082BE	4082B
CD4082BF	4082B
CD4085B	4085B
CD4085BD	4085B
CD4085BE	4085B
CD4085BF	4085B
CD4086B	4086B
CD4086BD	4086B
CD4086BE	4086B
CD4086BF	4086B
CD4089BCJ	4089B
CD4089BCN	4089B
CD4089BE	4089B
CD4093	4093B
CD4093B	4093B
CD4093BC	4093B
CD4093BCJ	4093B
CD4093BCN	4093B
CD4093BE	4093B
CD4093BM	4093B
CD4094B	4094B
CD4094BD	4094B
CD4094BE	4094B
CD4094BF	4094B
CD4095B	4095B
CD4095BD	4095B
CD4095BE	4095B
CD4095BF	4095B
CD4096B	4096B
CD4096BD	4096B
CD4096BE	4096B
CD4096BF	4096B
CD4097B	4097B
CD4097BD	4097B
CD4097BE	4097B
CD4097BF	4097B
CD4098	4098B
CD4098B	4098B
CD4098BD	4098B
CD4098BE	4098B
CD4098BF	4098B
CD4099B	4099B
CD4099BCJ	4099B
CD4099BCN	4099B
CD4099BD	4099B
CD4099BE	4099B
CD4099BF	4099B
CD4099BMJ	4099B
CD4099BMW	4099B
CD4116	142A
CD4117	142A
CD4118	142A
CD4121	142A
CD4122	142A
CD4502B	4502B
CD4502BE	4502B
CD4503B	40097B
CD4503BE	40097B
CD4503BN	40097B
CD4508BE	4508B
CD4510B	4510B
CD4510BC	4510B
CD4510BCJ	4510B
CD4510BCN	4510B
CD4510BD	4510B
CD4510BE	4510B
CD4510BF	4510B
CD4510BM	4510B
CD4510BMJ	4510B
CD4510BMW	4510B
CD4511	4511B
CD4511B	4511B
CD4511BC	4511B
CD4511BD	4511B
CD4511BE	4511B
CD4511BF	4511B
CD4511BM	4511B
CD4511E	4511B
CD4512B	4512B
CD4512BC	4512B
CD4512BE	4512B
CD4512CN	4512B
CD4514B	4514B
CD4514BC	4514B
CD4514BD	4514B
CD4514BE	4514B
CD4514BF	4514B
CD4514BH	4514B
CD4514BK	4514B
CD4514BM	4514B
CD4515B	4515B
CD4515BC	4515B
CD4515BD	4515B
CD4515BE	4515B
CD4515BF	4515B
CD4515BH	4515B
CD4515BK	4515B
CD4515BM	4515B
CD4516B	4516B
CD4516BC	4516B
CD4516BCJ	4516B
CD4516BCN	4516B
CD4516BD	4516B
CD4516BE	4516B
CD4516BF	4516B
CD4516BM	4516B
CD4516BMJ	4516B
CD4516BMW	4516B
CD4517BD	4517B
CD4517BE	4517B
CD4518	4518B
CD4518B	4518B
CD4518BC	4518B
CD4518BCJ	4518B
CD4518BCN	4518B
CD4518BD	4518B
CD4518BE	4518B
CD4518BF	4518B
CD4518BM	4518B
CD4518BMJ	4518B
CD4518BMW	4518B
CD4520	4520B
CD4520B	4520B
CD4520BC	4520B
CD4520BCJ	4520B
CD4520BCN	4520B
CD4520BD	4520B
CD4520BE	4520B
CD4520BF	4520B
CD4520BM	4520B
CD4520BMJ	4520B
CD4520BMW	4520B
CD4521B	4521B
CD4521BE	4521B
CD4522BC	4522B
CD4522BM	4522B
CD4527	4527B
CD4527BCJ	4527B
CD4527BCN	4527B
CD4527BD	4527B
CD4527BE	4527B
CD4527BF	4527B
CD4527BMJ	4527B
CD4527BMW	4527B
CD4528	4528B
CD4528BC	4528B
CD4528BM	4528B
CD4529BCN	4529B
CD4532B	4532B
CD4532BD	4532B
CD4532BE	4532B
CD4532BF	4532B
CD4536BE	4536B
CD4538	4538B
CD4538B	4538B
CD4538BC	4538B
CD4543	4543B
CD4543B	4543B
CD4543BC	4543B
CD4543BE	4543B
CD4555B	4555B
CD4555BD	4555B
CD4555BE	4555B
CD4555BF	4555B
CD4556B	4556B
CD4556BD	4556B
CD4556BE	4556B
CD4556BF	4556B
CD4585B	4585B
CD4585BE	4585B
CD5002	519
CD5003	177
CD5590	325
CD6016	519
CD6016-013-689	519
CD6019	123AP
CD6150	123AP
CD6153	128
CD6153-2	128
CD6157	123AP
CD6161P1N013-75	519
CD6375	123AP
CD7012	318
CD8000	123AP
CD8000-1	123AP
CD8457	177
CD8547	177
CD9525	123AP
CD10000-1E	159
CD10113-02	40106B
CD12000	123AP
CD13332	116
CD13333	116
CD13334	116
CD13335	116
CD13336	116
CD13337	116
CD13338	116
CD13339	116
CD40100B	40100B
CD40100BE	40100B
CD40106	40106B
CD40106B	40106B
CD40106BC	40106B
CD40106BE	40106B
CD40106BM	40106B
CD40160BCJ	40160B
CD40160BCN	40160B
CD40160BD	40160B
CD40160BE	40160B
CD40160BF	40160B
CD40160BMJ	40160B
CD40160BMW	40160B
CD40161B	40161B
CD40161BC	40161B
CD40161BCJ	40161B
CD40161BCN	40161B
CD40161BD	40161B
CD40161BE	40161B
CD40161BF	40161B
CD40161BM	40161B
CD40161BMJ	40161B
CD40161BMW	40161B
CD40162B	40162B
CD40162BC	40162B
CD40162BCJ	40162B
CD40162BCN	40162B
CD40162BD	40162B
CD40162BE	40162B
CD40162BF	40162B
CD40162BM	40162B
CD40162BMJ	40162B
CD40162BMW	40162B
CD40163B	40163B
CD40163BC	40163B
CD40163BCJ	40163B
CD40163BCN	40163B
CD40163BD	40163B
CD40163BE	40163B
CD40163BF	40163B
CD40163BM	40163B
CD40163BMJ	40163B
CD40163BMW	40163B
CD40174B	40174B
CD40174BC	40174B
CD40174BD	40174B
CD40174BE	40174B
CD40174BF	40174B
CD40174BM	40174B
CD40175	40175B
CD40175B	40175B
CD40182BD	40182B
CD40182BE	40182B
CD40182BF	40182B
CD40192B	40192B
CD40192BC	40192B
CD40192BCJ	40192B
CD40192BCN	40192B
CD40192BD	40192B
CD40192BE	40192B
CD40192BF	40192B
CD40192BM	40192B
CD40192BMJ	40192B
CD40192BMW	40192B
CD40192CJ	40192B
CD40192CN	40192B
CD40193B	40193B
CD40193BC	40193B
CD40193BCJ	40193B
CD40193BCN	40193B
CD40193BD	40193B
CD40193BE	40193B
CD40193BF	40193B
CD40193BM	40193B
CD40193BMJ	40193B
CD40193BMW	40193B
CD40194BCJ	40194B
CD40194BCN	40194B
CD40194BE	40194B
CD44030CN	4070B
CD86003	177
CD410199	6230
CD410299	6230
CD410499	6230
CD410699	6230
CD410899	6230
CD411099	6230
CD411299	6230
CD420140	5711
CD420160	5721
CD420190	5721
CD420240	5711
CD420260	5721
CD420290	5721
CD420440	5711
CD420460	5721
CD420490	5721
CD420640	5711
CD420660	5721
CD420690	5721
CD420840	5711
CD420860	5721
CD420890	5721
CD421040	5711
CD421060	5721
CD421090	5721
CD421240	5711
CD421260	5721
CD421290	5721
CD430140	5710
CD430160	5720
CD430190	5720
CD430240	5710
CD430260	5720
CD430290	5720
CD430440	5710
CD430460	5720
CD430490	5720
CD430640	5710
CD430660	5720
CD430690	5720
CD430840	5710
CD430860	5720
CD430890	5720
CD431040	5710
CD431060	5720
CD431090	5720
CD431240	5710
CD431260	5720
CD431290	5720
CD470140	5712
CD470160	5722
CD470190	5722
CD470240	5712
CD470260	5722
CD470290	5722
CD470440	5712
CD470460	5722
CD470490	5722
CD470640	5712
CD470660	5722
CD470690	5722
CD470840	5712
CD470860	5722
CD470890	5722
CD471040	5712
CD471060	5722
CD471090	5722
CD471240	5712
CD471260	5722
CD471290	5722
CD860011	178MP
CD860037	177
CD3112018	5072A
CD3112039	139A
CD3122055	139A
CD3212055	139A
CD-0000	109
CD-0000N	109
CD-00-9	177
CD-0014N	109
CD-0021	177
CD-0033	137A
CD-0071	614
CD-05	116
CD-07	120
CD-2	116
CD-2N	116
CD-4	116
CD-20	177
CD-37	177
CD-37A	177
CD-5038	519
CD-6439	911
CD-8457	116
CD-84857	177
CD-860037	116
CDC86X7-5	123AP
CDC430	123AP
CDC496	159
CDC587	128
CDC731	132
CDC744	154
CDC745	128
CDC745(ZENITH)	123AP
CDC746	123AP
CDC746(ZENITH)	159
CDC1201BC	123AP
CDC2010	123AP
CDC2010C	123AP
CDC2010D	123AP
CDC2510C	123AP
CDC2510C-G	123AP
CDC2510G	123AP
CDC4023A130	123AP
CDC5000	107
CDC5000-1B	108
CDC5008	128
CDC5028A	128
CDC5038A	108
CDC5071A	108
CDC5075B	108
CDC8000	123AP
CDC8000-1	128
CDC8000-1B	123AP
CDC8000-1C	128
CDC8000-1D	192
CDC8000-CM	128
CDC8001	123AP
CDC8002	128
CDC8002-1	128

PART NUMBER	NTE REPLACEMENT
CDC8011B	123AP
CDC8021	123AP
CDC8054	123AP
CDC8201	123AP
CDC8457	177
CDC9000-1	159
CDC9000-1B	129
CDC9000-1C	193
CDC9000-1D	159
CDC9002	129
CDC9002-1C	128
CDC9002-18	128
CDC10000-1E	159
CDC12000	123AP
CDC12000-1C	123AP
CDC12018C	123AP
CDC12030B	107
CDC12077F	123AP
CDC12108	123AP
CDC12112C	108
CDC12112D	108
CDC12112E	108
CDC12112F	108
CDC13000	123AP
CDC13000-1	123AP
CDC13000-1B	123AP
CDC13000-1C	123AP
CDC13000-1D	123AP
CDC13000-18	123AP
CDC13000C	123AP
CDC13016A	123AP
CDC13019B	123AP
CDC13500-1	123AP
CDC15018	123AP
CDC25100-6	123AP
CDC25100-G	161
CDC60132	123AP
CDC90001B	193
CDC120700	128
CDC4306813	123AP
CDC-8000-1	123AP
CDC-8000-1D	192
CDC-8001	123AP
CDC-9000	126
CDC-9000-1B	129
CDC-9000-1D	159
CDC-9002-IC	106
CDC-13000	123AP
CDC-13000-1	123AP
CDC-13000-1D	123AP
CDG00	177
CDG005	116
CDG025	177
CDG22	177
CDG23	177
CDG24	177
CDG24/3490	177
CDG27	177
CDG-00	177
CDG-20	177
CDG-20/494	177
CDG-21	177
CDG-22	177
CDG-24	177
CDJ-00	177
CDK-4	116
CDQ1004	154
CDQ1011	194
CDQ1012	194
CDQ1014	194
CDQ1018	123AP
CDQ1021	123AP
CDQ1024	123AP
CDQ1037	194
CDQ1044	194
CDQ1045	194
CDQ10001	123AP
CDQ10002	123AP
CDQ10003	123AP
CDQ10004	123AP
CDQ10005	123AP
CDQ10006	123AP
CDQ10007	123AP
CDQ10008	123AP
CDQ10009	123AP
CDQ10010	123AP
CDQ10011	128
CDQ10012	128
CDQ10013	154
CDQ10014	128
CDQ10015	154
CDQ10016	123AP
CDQ10017	123AP
CDQ10018	123AP
CDQ10019	123AP
CDQ10020	123AP
CDQ10021	123AP
CDQ10022	123AP
CDQ10023	123AP
CDQ10024	123AP
CDQ10025	123AP
CDQ10026	123AP
CDQ10027	123AP
CDQ10028	123AP
CDQ10032	123AP
CDQ10033	128
CDQ10034	154
CDQ10035	123
CDQ10036	123
CDQ10037	154
CDQ10044	192
CDQ10045	154
CDQ10046	154
CDQ10047	154
CDQ10048	128
CDQ10049	154
CDQ10051	128
CDQ10052	128
CDQ10053	128
CDQ10057	128
CDQ10058	128
CDR69/121/207	911
CDR-2	116
CDR-4	116
CDS-16B	116
CDT1309	121
CDT1310	121
CDT1311	121
CDT1312	127
CDT1313	127
CDT1315	127
CDT1319	121
CDT1320	121
CDT1321	121
CDT1322	127
CDT1349	121
CDT1349A	121
CDT1350	121
CDT1350A	121
CDT-1322	179
CDZ318-75	143A
CDZ15000	128
CDZ-9V	139A
CDZ-318-75	138A
CDZ-C9V	139A
CE0360/7839	102A
CE03607839	102
CE0361/7839	102A
CE0362/7839	102A
CE0363/7839	158
CE0378/7839	614
CE0398-7839	5804
CE0398/7839	116
CE0495/7839	109
CE37	177
CE106C1	5456
CE502	116
CE504	116
CE506	116
CE508	125
CE510	125
CE4001B	123AP
CE4001C	108
CE4001E	123AP
CE4002D	129
CE4003D	128
CE4003E	123AP
CE4004C	123AP
CE4005C	159
CE4008B	229
CE4008C	229
CE4008D	229
CE4008E	229
CE4010D	108
CE4010E	108
CE4012D	159
CE4013E	123AP
CE213811	102A
CEC6050	116
CECR-6	504
CER6B	116
CER67	116
CER67A	116
CER67B	116
CER67C	116
CER68	116
CER68A	116
CER68B	116
CER68C	116
CER69	116
CER69A	116
CER69B	116
CER69C	116
CER70	116
CER70A	116
CER70B	116
CER70C	116
CER71	116
CER71A	116
CER71B	116
CER71C	116
CER72	125
CER72A	125
CER72B	125
CER72C	125
CER72D	125
CER72F	125
CER73	125
CER73A	125
CER73B	125
CER73C	125
CER73D	125
CER73F	125
CER500	116
CER500A	116
CER500B	116
CER500C	116
CER670	116
CER670A	116
CER670B	116
CER670C	116
CER680	116
CER680A	116
CER680B	116
CER680C	116
CER690	116
CER690A	116
CER690B	116
CER690C	116
CER700	116
CER700A	116
CER700B	116
CER700C	116
CER710	116
CER710A	116
CER710B	116
CER710C	116
CER720	125
CER720A	125
CER720B	125
CER720C	125
CER730	125
CER730A	125
CER730B	125
CER730C	125
CER-69	116
CER-71	116
CER-71CA	116
CF1	108
CF2	123AP
CF3	610
CF5	123
CF6	195A
CF8	237
CF11	313
CF14	233
CF102DA	116
CF102PA	125
CF102RA	125
CF102VA	156
CF152VA	156
CF-092	139A
CF-2	123AP
CF-3	611
CF-1295H	128
CFR-10	118
CG1	123AP
CG12-E	109
CG12E	109
CG64H	109
CG65H	109
CG66H	109
CG74H	109
CG86H	109
CG23018	519
CG24015A	9944
CGD462	109
CGD591	109
CGD685	109
CGD1029	109
CGE-50	160
CGE-51	160
CGE-52	102A
CGE-53	158
CGE-54(NPN)	103A
CGE-54(PNP)	102A
CGE-60	319P
CGE-61	233
CGE-62	199
CGE-63	192
CGE-64	172A
CGE-66	152
CGE-67	193
CGE-68	124
CGE-69	153
CGE-75	283
CGE-78MP	283
CGE-79	238
CGE-500	177
CGJ-1	525
CH119D	116
CH4108	5023A
CH4113	5078A
CH4117	5082A
CH4119	5034A
CH4133	5094A
CH4728	5066A
CH4730	5067A
CH4731	5068A
CH4761	5093A
CH4763	5095A
CH4764	5096A
CH5233	5012A
CH5247	5076A
CH5264	5091A
CH5269B	5094A
CH5275	5099A
CH5278	5102A
CHA4Z3.6	134A
CHA4Z5.1	135A
CHA4Z5.6	136A
CHAZ6.2	137A
CHAZ6.2A	137A
CHAZ62.A	137A
CHMZ3.6	134A
CHMZ5.1	135A
CHMZ5.6	136A
CHZ10	140A
CHZ10A	140A
CHZ210A	140A
CI2711	123AP
CI2712	123AP
CI2713	123AP
CI2714	123AP
CI2923	123AP
CI2924	123AP
CI2925	123AP
CI2926	123AP
CI3390	123AP
CI3391	123AP
CI3391A	123AP
CI3392	123AP
CI3393	123AP
CI3394	123AP
CI3395	123AP
CI3396	123AP
CI3397	123AP
CI3398	123AP
CI3402	123AP
CI3403	123AP
CI3404	123AP
CI3405	123AP
CI3414	123AP
CI3415	123AP
CI3416	123AP
CI3417	123AP
CI3704	128
CI3705	128
CI3706	128
CI3900	123AP
CI3900A	123AP
CI3901	123AP
CI4256	123AP
CI4424	123AP
CI4425	123AP
CI-8.2	5072A
CI-1003	723
CIC-300	124
CIl73Y	152
CII-225-Q	130
CIJ70645	110MP
CIL511	108
CIL512	108
CIL513	108
CIL521	108
CIL522	108
CIL523	108
CIL531	108
CIL532	108
CIL533	108
CIL-531	123AP
CIL-532	123AP
CJ5201	123AP
CJ5202	123AP
CJ5203	123AP
CJ5204	102A
CJ5206	123AP
CJ5206A	192
CJ5207	123AP
CJ5209	129
CJ5210	128
CJ5211	123AP
CJ5212	123AP
CJ5213	128
CJ5214	128
CJ5215	128
CJ-5206	123AP
CJ-5207	123AP
CJ-5208	123AP
CJ-5209	129
CJ-5210	128
CJ-5211	123AP
CJ-5212	123AP
CJSE067	933
CJSE071	931
CK4	126
CK4A	126
CK13	102A
CK13A	102A
CK14	100
CK14A	100
CK16	100
CK16A	100
CK17	100
CK17A	100
CK22	102A
CK22A	102A
CK22B	102A
CK22C	102A
CK25	100
CK25A	100
CK26	100
CK26A	100
CK27	100
CK27A	100
CK28	126
CK28A	126
CK64	102A
CK64A	102A
CK64B	102A
CK64C	102A
CK65	102A
CK65A	102A
CK65B	102A
CK65C	102A
CK66	102A
CK66A	102A
CK66B	102A
CK66C	102A
CK67	102A
CK67A	102A
CK67B	102A
CK67C	102A
CK83	160
CK131	112
CK261	101
CK262	101
CK398	194
CK419	128
CK420	199
CK421	199
CK422	128
CK474	128
CK475	128
CK476	108
CK477	108
CK661	100
CK662	100
CK705	109
CK706	109
CK706-P	109
CK706A	109
CK706P	109
CK710	112
CK715	109
CK721	102
CK722	102
CK725	102
CK727	102
CK731	112
CK751	102
CK754	102
CK759	100
CK759A	100
CK760	100
CK760A	100
CK761	100
CK762	126
CK766	126
CK766A	126
CK768	100
CK776	100
CK776A	100
CK790	102
CK791	102
CK793	102
CK794	102
CK870	102
CK871	102
CK872	102
CK875	102
CK878	102
CK879	102
CK882	102
CK888	102
CK891	102A
CK892	102A
CK942	159
CK-706	109
CL010	116
CL05	116
CL025	116
CL066C	123AP
CL1	116
CL1.5	116
CL2	116
CL3	116
CL4	116
CL5	116
CL6	116
CL7	116
CL8	116
CL15	3040
CL110	3028
CL110A	3028
CL116P	159
CL116Q	159
CL120	3041
CL155C	294
CL166C	123A
CL166C,D	123AP
CL166D	123A
CL166N	123AP
CL1506	3042
CL1510	3041
CL1511	3041
CL-110	3028
CL-110A	3028
CLC3028	435K28
CLC3030	435K30
CLC3042	435K42
CLC3064	435K64
CLEAK-02200	5313
CLEAK-02300	5313
CLEAK-02301	5313
CLEAK-05401(1)	261
CLEAK-02601	37
CLEAK-02601(1)	37
CLEAK-12004	2764
CLI-5	3040
CLM05	116
CLM1	116
CL066C	289A
CLR2050	3032
CLR2060	3036
CLR2081	3036
CLR2180	3036
CM	113A
CM0770	128
CM4-83	3025
CM4-83-1	3025
CM4-83-2	3025
CM4-84-1	3020
CM4-84B	3020
CM4-84B-0	3020
CM4-84B-1	3020
CM4-100	3050
CM4-101	3051
CM4-110	3050
CM4-111	3051
CM4-284B	3022
CM4-344A	3010
CM4-384B	3024
CM4-444A	3009
CM4-484B	3023
CM4-544A	3011
CM4-584B	3021
CM4-584B-2	3021
CM4-5020	3042
CM2550	121
CM4000	4000
CM4000A	4000
CM4000AD	4000
CM4000AE	4000
CM4001	4001B
CM4001A	4001B
CM4001AD	4001B
CM4001AE	4001B
CM4001B	4001B
CM4001BE	4001B
CM4002	4002B
CM4002A	4002B
CM4002AD	4002B
CM4002AE	4002B
CM4006A	4006B
CM4006AD	4006B
CM4006AE	4006B
CM4007	4007
CM4007A	4007
CM4007AE	4007
CM4008A	4008B
CM4008AD	4008B
CM4008AE	4008B
CM4009	4009
CM4011	4011B
CM4011A	4011B
CM4011AD	4011B
CM4011AE	4011B
CM4011B	4011B
CM4011BE	4011B
CM4012A	4012B
CM4012AD	4012B
CM4012AE	4012B
CM4013	4013B
CM4013A	4013B
CM4013AD	4013B
CM4013AE	4013B
CM4013B	4013B
CM4013BE	4013B
CM4014A	4014B
CM4014AE	4014B
CM4015	4015B
CM4015A	4015B
CM4015AE	4015B
CM4016	4016B
CM4016A	4016B
CM4016AE	4016B
CM4017	4017B
CM4017A	4017B
CM4017AD	4017B
CM4017AE	4017B
CM4018A	4018B
CM4018AD	4018B
CM4018AE	4018B
CM4019	4019B
CM4019AD	4019B
CM4019AE	4019B
CM4020A	4020B
CM4020AD	4020B
CM4020AE	4020B
CM4021A	4021B
CM4021AE	4021B
CM4022A	4022B
CM4022AE	4022B
CM4023A	4023B
CM4023AD	4023B
CM4023AE	4023B
CM4024	4024B
CM4024A	4024B
CM4024AD	4024B
CM4024AE	4024B
CM4025	4025B
CM4025A	4025B
CM4025AD	4025B
CM4025AE	4025B
CM4027	4027B
CM4027A	4027B
CM4027AD	4027B
CM4027AE	4027B
CM4028A	4028B
CM4028AD	4028B
CM4028AE	4028B
CM4029A	4029B
CM4029AD	4029B
CM4029AE	4029B
CM4030	4030B
CM4030AD	4030B
CM4030AE	4030B
CM4032AE	4032B
CM4034A	4034B
CM4034AE	4034B
CM4035A	4035B
CM4035AE	4035B
CM4038AE	4038B
CM4040	4040B
CM4040A	4040B
CM4040AD	4040B
CM4040AE	4040B
CM4041A	4041
CM4041AE	4041
CM4042	4042B
CM4042A	4042B
CM4042AE	4042B
CM4043A	4043B
CM4043AE	4043B
CM4045AE	4045B
CM4047A	4047B
CM4047AE	4047B
CM4048AE	4048B
CM4049A	4049
CM4049AE	4049
CM4050	4050B
CM4050A	4050B
CM4050AE	4050B
CM4051A	4051B
CM4051AE	4051B
CM4052	4052B
CM4052B	4052B
CM4052BE	4052B
CM4053A	4053B
CM4053AE	4053B
CM4068A	4068B
CM4068AE	4068B
CM4069A	4069
CM4069AE	4069
CM4070A	4070B
CM4070AE	4070B
CM4071A	4071B
CM4071AE	4071B
CM4073AE	4073B
CM4073B	4073B
CM4076A	4076B
CM4076AE	4076B
CM4077A	4077B
CM4077AE	4077B
CM4078A	4078B
CM4078AE	4078B
CM4081	4081B
CM4081A	4081B
CM4081AE	4081B
CM4511	4511B
CM4511B	4511B
CM4511BE	4511B
CM4514B	4514B
CM4514BE	4514B
CM4515B	4515B
CM4515BE	4515B
CM4518	4518B
CM4518B	4518B
CM4518BE	4518B
CM4520	4520B
CM4520B	4520B
CM4520BE	4520B
CM7163	123AP
CM8470	116
CM8640E	102
CM-4-84-2	3020
CM-9	736
CM-12	116
CM-24	3019
CM-244A	3008
CMC334-423	123AP
CMC2540A	98
CMC4035A	98
CMC4040A	98
CMC7010A	99
CMC7012A	99
CMC7015A	99
CMO770	123AP
CN2484	128
CN5310	1410
CN5310K	1410
CN5310L	1410
CN5310M	1410
CN5311	1410
CN5311KL	1410
CNX35	3041
CNX35U	3041
CNY17	3040
CNY17-1	3041
CNY17-2	3041
CNY17-3	3041
CNY17/1	3041
CNY17/2	3041
CNY17/3	3041
CNY18	3040
CNY28	3100
CNY29	3101
CNY31	3102
CNY32	3103
CNY36	3102
CNY37	3100
CO2	5072A
CO5-10	125
CO49	116
CO410	125
CO510	125
CO10816-XX	4050B
CO14313	74LS244
CO14336	4051B
CO14344	74LS138
CO14377	6502
CO14806	6502
CO14806-12	6502
CO-10745-03	6507
CO-10750	6532
CO-10750-03	6532
CO-10816	4050B
CO-14348	960
COC13000-1C	192
COC13000-IC	224
COD1-6045	116
COD1-6046	116
COD1-6047	116
COD1-6048	116
COD1531	116
COD1532	116
COD1533	116
COD1534	116
COD1535	116
COD1536	116
COD1537	125
COD1538	125
COD1551	116
COD1552	116
COD1553	116
COD1554	116
COD1555	116

PART NUMBER	NTE REPLACEMENT
COD1556	116
COD1575	116
COD1611	116
COD1612	116
COD1613	116
COD1614	116
COD1615	116
COD1616	116
COD1617	125
COD1618	125
COD11556	116
COD15524	116
COD15534	116
COD15544	116
COD15564	116
COD16047	116
CODI537	125
CODI538	125
CODI617	125
CODI1531	116
CODI6045	116
CODI6047	116
CODI11556	116
CODI15524	116
CODI15534	116
CODI15544	116
CODI15564	116
CODI115524	116
CP102	125
CP102BA	116
CP102DA	116
CP102FA	116
CP102HA	116
CP102KA	116
CP102MA	116
CP102PA	125
CP102RA	125
CP102VA	125
CP103	125
CP152VA	125
CP400	130
CP401	130
CP403	194
CP404	130
CP405	130
CP406	130
CP407	130
CP408	130
CP409	128
CP703	194
CP800	158
CP801	158
CP802	158
CP803	158
CP2357	128
CP3120E	731
CP3212055	139A
CPS15553-101	9932
CPS-16676-1	9951
CQ1	102A
CQT940A	121
CQT940B	121
CQT940BA	121
CQT1075	121
CQT1076	121
CQT1077	121
CQT1110	121
CQT1110A	121
CQT1111	121
CQT1111A	121
CQT1112	121
CQT1129	121
CQX10	3025
CQX11	3024
CQX12	3021
CQX40/5VL	3025
CQX40/12VL	3025
CQX40L	3025
CQX41	3000
CQY65	3007
CQY72L	3024
CQY73	3003
CQY74L	3021
CQY85	3007
CQY86	3010
CR0000	109
CR02AM	5401
CR02AM1	5401
CR02AM4	5404
CR02AM-1	5401
CR02AM-4	5404
CR02AM-8	5405
CR02AN4	5404
CR0122B	5463
CR0122D	5465
CR1-051C	5412
CR1-051CA	5412
CR1-101C	5413
CR1-101CA	5413
CR1-201C	5414
CR1-201CA	5414
CR2AM8	5457
CR2AM-8	5457
CR2CM-8	5457
CR3AM28	5457
CR3AMZ	5457
CR3AMZ-8	5457
CR3CM8	5457
CR3CM-8	5457
CR3CM-8-208	5457
CR3CM-B	5457
CR9	5139A
CR12A-6	5518
CR12A-8	5518
CR20A-4	5517
CR20A-6	5518
CR20A-8	5518
CR20A-12	5547
CR34MZ	5457
CR101/6515	109
CR102/6515	109
CR103	118
CR103A(AGK)	5402
CR103B(AGK)	5404
CR103C(AGK)	5405
CR103D(AGK)	5405
CR103E(AGK)	5406
CR103M(AGK)	5406
CR103Y(AGK)	5400
CR103YY(AGK)	5401
CR106A1	5454
CR106B1	5455
CR106D1	5457
CR106F1	5453
CR106Y1	5452
CR107A1	5454
CR107B1	5455
CR107C1	5456
CR107D1	5457
CR107F1	5453
CR107Y1	5452
CR122A	5462
CR122B	5463
CR122C	5465
CR122D	5465
CR122E	5466
CR122F	5461
CR122M	5466
CR122N	5468
CR160B	5534
CR160C	5534
CR160D	5534
CR160E	5534
CR160M	5534
CR203A	5402
CR203B	5404
CR203C	5405
CR203D	5405
CR203E	5406
CR203M	5406
CR203Y	5400
CR203YY	5401
CR250J4	5587
CR250J6	5587
CR250J8	5587
CR250J10	5587
CR250J12	5587
CR353	177
CR501	177
CR501/6515	116
CR502	177
CR504	506
CR505	506
CR506	506
CR606	177
CR607	177
CR608	177
CR609	177
CR610	177
CR801	116
CR951	156
CR952	156
CR953	156
CR954	156
CR955	156
CR956	142A
CR1034	116
CR1035	116
CR1157	5547
CR5000	173BP
CR/E	116
CRD2AM-4	5404
CRT1544	121
CRT1545	121
CRT1552	121
CRT1553	121
CRT1602	121
CRT3602A	121
CS3-02	5463
CS3-04	5465
CS8-02N	5491
CS8-05N	5491
CS8-1N	5491
CS8-2N	5492
CS8-3N	5494
CS8-4N	5494
CS8-6N	5496
CS10-05N	5491
CS10-1N	5491
CS10-2N	5496
CS10-4N	5494
CS10-6N	5496
CS11C	5412
CS13-04	5518
CS16-06	5547
CS16E	116
CS20-02R	5520
CS20-05N	5521
CS20-05R	5521
CS20-1.5R	5523
CS20-1N	5522
CS20-1R	5522
CS20-2.5R	5525
CS20-2N	5524
CS20-2R	5524
CS20-3R	5526
CS20-4N	5527
CS20-4R	5527
CS20-5R	5528
CS20-6N	5529
CS20-6R	5529
CS25-02N	5520
CS25-02R	5520
CS25-05N	5521
CS25-05R	5521
CS25-1N	5522
CS25-1R	5522
CS25-2N	5524
CS25-2R	5524
CS25-3R	5526
CS25-4N	5527
CS25-4R	5527
CS25-6N	5529
CS25-6R	5529
CS25-7R	5530
CS25-8N	5531
CS25-8R	5531
CS35-02N	5541
CS35-02R	5541
CS35-05N	5541
CS35-05R	5541
CS35-1.5R	5543
CS35-1N	5542
CS35-1R	5542
CS35-2.5R	5544
CS35-2N	5543
CS35-2R	5543
CS35-4N	5545
CS35-4R	5545
CS35-6N	5547
CS35-6R	5547
CS93-1007	175
CS96	1187
CS131A	6354
CS131AZ	6354
CS131B	6354
CS131C	6354
CS131D(AXIAL)	116
CS131D(STUD)	6354
CS131E	6356
CS131F	6356
CS131Z	6354
CS180	504
CS183E	123
CS184E	123
CS184J	108
CS201F	123AP
CS360	123AP
CS429J	108
CS430H	108
CS461F	108
CS469F	108
CS696	123AP
CS697	123AP
CS706	123AP
CS718	123AP
CS718A	123AP
CS720A	123AP
CS901ZHF	159
CS918	108
CS925M	123AP
CS929	161
CS930	161
CS956	128
CS1014	108
CS1014D	108
CS1014E	108
CS1014F	108
CS1014G	161
CS1014H	161
CS1018	108
CS1068	123AP
CS1120C	161
CS1120D	161
CS1120E	161
CS1120F	161
CS1120H	161
CS1120I	123AP
CS1121G	159
CS1124G	106
CS1129E	128
CS1166	123AP
CS1166D	123AP
CS1166D-G	123AP
CS1166E	123AP
CS1166F	123AP
CS1166G	123AP
CS1166H	123AP
CS1166H/F	123AP
CS1168E	108
CS1168F	123AP
CS1168G	123AP
CS1168H	123AP
CS1170F	159
CS1221F	159
CS1225D	108
CS1225E	108
CS1225F	108
CS1225H	128
CS1225HF	128
CS1226	108
CS1226E	108
CS1226F	108
CS1226G	108
CS1226H	108
CS1226N	123AP
CS1227	108
CS1227D	108
CS1227E	108
CS1227F	108
CS1227G	108
CS1228	159
CS1228E	159
CS1229	123AP
CS1229A	123AP
CS1229B	123AP
CS1229C	123AP
CS1229D	123AP
CS1229E	123AP
CS1229F	123AP
CS1229G	123AP
CS1229H	123AP
CS1229K	128
CS1229N	128
CS1235C	123AP
CS1235E	123AP
CS1235G	123AP
CS1236D	123AP
CS1236H	123AP
CS1237	129
CS1238	108
CS1238F	123AP
CS1238G	108
CS1238H	108
CS1238I	108
CS1238P	123AP
CS1243E	108
CS1243H	108
CS1244H	108
CS1244J	108
CS1244X	108
CS1245F	123AP
CS1245G	123AP
CS1245H	123AP
CS1245I	123AP
CS1245T	123AP
CS1248	128
CS1248I	128
CS1248T	128
CS1250E	123AP
CS1250F	128
CS1251E	159
CS1251F	159
CS1252B	108
CS1252C	108
CS1255H	128
CS1255HF	193
CS1255M	192
CS1256H	129
CS1256HG	192
CS1256MC	189
CS1257	123AP
CS1258	123AP
CS1259	123AP
CS1283A	123AP
CS1284B	161
CS1284F	161
CS1284G	161
CS1284H	161
CS1286	123AP
CS1288	123AP
CS1289	123AP
CS1293	108
CS1294E	159
CS1294H	159
CS1295E	123AP
CS1295G	123AP
CS1295H	128
CS1298	159
CS1303	159
CS1305	128
CS1308	159
CS1312G	129
CS1330	161
CS1330A	108
CS1330B	108
CS1330C	108
CS1330D	123AP
CS1340D	108
CS1340E	108
CS1340F	108
CS1340G	108
CS1340H	108
CS1340I	123AP
CS1344	123AP
CS1345	123AP
CS1347	154
CS1348	123AP
CS1349	123AP
CS1350	108
CS1351	108
CS1352	128
CS1353	123AP
CS1354	159
CS1359	108
CS1360	108
CS1361E	108
CS1361F	108
CS1361G	123AP
CS1362	123AP
CS1363	123AP
CS1368	123AP
CS1368A	123AP
CS1368B	123AP
CS1368C	123AP
CS1368D	123AP
CS1369	129
CS1369D	106
CS1370	123AP
CS1371	123AP
CS1372	123AP
CS1383	123AP
CS1386H	108
CS1420	123AP
CS1453E	123AP
CS1453F	128
CS1453G	128
CS1460E	161
CS1460H	161
CS1461J	161
CS1461X	161
CS1462F	161
CS1462I	128
CS1463A	123AP
CS1464H	128
CS1465H	129
CS1508G	108
CS1509E	108
CS1509F	108
CS1518E	108
CS1555	108
CS1585	123AP
CS1585E/F	123AP
CS1585G	123AP
CS1585H	107
CS1589E	161
CS1589F	161
CS1589S	161
CS1591LE	128
CS1594E	161
CS1596E	161
CS1609F	128
CS1613	128
CS1625	123AP
CS1627	159
CS1661	108
CS1664	128
CS1665	123AP
CS1702C	123AP
CS1711	128
CS1758	158
CS1759	103A
CS1834	108
CS1893	128
CS1909B	293
CS1910B	294
CS1990	128
CS2001	123AP
CS2001C	123AP
CS2001D	123AP
CS2001F	123AP
CS2001G	123AP
CS2001H	123AP
CS2001I	123AP
CS2001J	123AP
CS2002	159
CS2002A	159
CS2002B	159
CS2002C	159
CS2002D	159
CS2002E	159
CS2002F	159
CS2002G	159
CS2002H	159
CS2003	123AP
CS2003A	123AP
CS2003B	123AP
CS2003C	123AP
CS2003D	123AP
CS2003E	123AP
CS2003F	123AP
CS2003G	123AP
CS2003H	123AP
CS2004	123AP
CS2004A	123AP
CS2004B	123AP
CS2004C	123AP
CS2004D	123AP
CS2005	159
CS2005A	159
CS2005B	106
CS2006	123AP
CS2006C	233
CS2006D	233
CS2006E	233
CS2006F	229
CS2006G	108
CS2006H	233
CS2006I	233
CS2006J	233
CS2007G	123AP
CS2007H	123AP
CS2008	108
CS2008C	108
CS2008D	108
CS2008E	108
CS2008G	108
CS2008H	108
CS2008H552	108
CS2008I	108
CS2008J	108
CS2023	192
CS2032M	159
CS2082	159
CS2082G	159
CS2083G	123AP
CS2142	193
CS2218	123AP
CS2219	123AP
CS2221	123AP
CS2222	123AP
CS2369	123AP
CS2383G	85
CS2481	123AP
CS2483	194
CS2484	128
CS2711	123AP
CS2712	123AP
CS2713	123AP
CS2714	123AP
CS2715	161
CS2716	161
CS2917	995
CS2917-D8	995M
CS2917-D14	995
CS2917D8	995M
CS2917D14	995
CS2922	123AP
CS2923	123AP
CS2924	123AP
CS2925	123AP
CS2941	159
CS3001B	123AP
CS3082	2023
CS3390	123AP
CS3391	123AP
CS3391A	123AP
CS3392	123AP
CS3393	123AP
CS3394	123AP
CS3395	123AP
CS3396	123AP
CS3397	123AP
CS3398	123AP
CS3402	123AP
CS3403	123AP
CS3404	123AP
CS3405	123AP
CS3414	123AP
CS3415	123AP
CS3416	123AP
CS3417	123AP
CS3470	3470
CS3524	1720
CS3525	1721
CS3525A	1721
CS3525AN	1721
CS3527	1723
CS3527A	1723
CS3527AN	1723
CS3605	123AP
CS3606	123AP
CS3607	123AP
CS3662	161
CS3663	161
CS3702	159
CS3703	159
CS3704	128
CS3705	128
CS3706	128
CS3707	161
CS3708	161
CS3709	161
CS3710	161
CS3711	161
CS3843	123AP
CS3844	123AP
CS3845	123AP
CS3854	123AP
CS3854A	123AP
CS3855	123AP
CS3855A	123AP
CS3859	123AP
CS3859A	123AP
CS3860	123AP
CS3900	123AP
CS3900A	123AP
CS3901	123AP
CS3903	123AP
CS3904	123AP
CS3906	159
CS4001	107
CS4003	199
CS4005	199
CS4006	194
CS4007	194
CS4012	288
CS4013	288
CS4021	161
CS4060	161
CS4061	199
CS4062	194
CS4193	107
CS4194	107
CS4424	123AP
CS4425	123AP
CS5088	123AP
CS5369	123AP
CS5447	159
CS5448	159
CS5449	128
CS5450	128
CS5451	128
CS5995	703
CS6168F	123AP
CS6168G	128
CS6168H	123AP
CS6225E	123AP
CS6225F	108
CS6225G	123AP
CS6226F	108
CS6227E	108
CS6227F	108
CS6227G	123AP
CS6228F	159
CS6228G	189
CS6229F	123AP
CS6229G	123AP
CS7228G	129
CS7229F	128
CS7229G	123AP
CS8050	297
CS8204	1648
CS8205	1649
CS9001	108
CS9011	123AP
CS9011(EF)	123AP
CS9011(GH)	123AP
CS9011/3490	123AP
CS9011D	123AP
CS9011E	123AP
CS9011F	123AP
CS9011G	123AP
CS9011G/3490	123AP
CS9011H	123AP
CS9011I	123AP
CS9011N	123AP
CS9012	159
CS9012/3490	129
CS9012E	159
CS9012E-F	159
CS9012F	129
CS9012FC	129
CS9012FG	159
CS9012H	129
CS9012HE	129
CS9012HF	129
CS9012HF(LAST IF)	233
CS9012HG	159
CS9012HG/3490	129
CS9012HH	159
CS9012HH/3490	159
CS9012I	129
CS9013	123AP
CS9013(HG)	184
CS9013/3490	128
CS9013A	123AP
CS9013B	123AP
CS9013C	123AP
CS9013D	123AP
CS9013E	128
CS9013E-F	128
CS9013F	128
CS9013G	128
CS9013H	128
CS9013HE	123AP
CS9013HF	123AP
CS9013HG	123AP
CS9013HG/3490	128
CS9013HH	123AP
CS9014	123AP
CS9014(C)	123AP
CS9014/3490	123AP
CS9014A	123AP
CS9014B	123AP
CS9014B-C	123AP
CS9014C	123AP
CS9014C/3490	123AP
CS9014D	123AP
CS9014G	123AP
CS9015	123AP
CS9015B	123AP
CS9015C	159
CS9015C2	159
CS9015D	159
CS9016	108-1
CS9016(G)	123AP
CS9016/3490	108
CS9016D	123AP
CS9016E	229
CS9016EF	123AP
CS9016F	229
CS9016F(TRUETONE)	123AP
CS9016F(WESTGHSE)	123AP
CS9016FG	123AP
CS9016G	123AP
CS9016G/3490	108
CS9016H	108
CS9017F	107
CS9017G	161
CS9017H	161
CS9018	108-1
CS9018/3490	108
CS9018D	108
CS9018E	108
CS9018EF	123AP
CS9018F	108
CS9018F/3490	108
CS9018FG	123AP
CS9018G	108
CS9019	161
CS9020E	159
CS9020F	159
CS9021G-I	108
CS9021HF	129
CS9021HF(LAST IF)	233
CS9021HG(LAST IF)	233
CS9022LE	128
CS9101B	123AP
CS9102	106
CS9102B	129
CS9103B	128
CS9103C	128
CS9104	199
CS9123C1	106
CS9124-C2	108
CS9124B1	108
CS9125-B1	108
CS9125B	123AP
CS9126	123AP
CS9128	106
CS9128-B2	159
CS9128C1	159
CS9129	159
CS9129(B)	106
CS9129-B1	106
CS9129B	159
CS9129B1	159

PART NUMBER	NTE REPLACEMENT
CS9129B2	159
CS9417	192
CS9600-4	123AP
CS9600-5	123AP
CS13401	123AP
CS90111	123AP
CS90121	129
CS90144	112
CS-16E	116
CS-460B	123AP
CS-461B	108
CS-901ZHF	159
CS-1120C1	123AP
CS-1120C2	123AP
CS-1120D1	123AP
CS-1120H	123AP
CS-1120I	123AP
CS-1235F	123AP
CS-1238F	123AP
CS-1238P	123AP
CS-1244X	123AP
CS-1258	123AP
CS-1259	123AP
CS-1294F	106
CS-1305	123AP
CS-1330	123AP
CS-1352	192
CS-1359	123AP
CS-1361E	123AP
CS-1361F	123AP
CS-1361G	123AP
CS-1372	128
CS-1386E	123AP
CS-1386H	123AP
CS-2001H	85
CS-2004C	108
CS-2005B	159
CS-2005C	159
CS-2007G	108
CS-2007H	108
CS-2008F	108
CS-2008G	108
CS-2008H	108
CS-2083	108
CS-2083H	123AP
CS-2142	193
CS-2143	192
CS-3001B	108
CS-3024	172A
CS-3527	1723
CS-3527A	1723
CS-3527AN	1723
CS-6168F	123AP
CS-6168G	123AP
CS-6168H	123AP
CS-6225E	107
CS-6225F	123AP
CS-6225G	123AP
CS-6227E	123AP
CS-6227F	123AP
CS-6227G	108
CS-6228G	129
CS-9011	123AP
CS-9011F	123AP
CS-9011G	123AP
CS-9011L	123AP
CS-9012HF	159
CS-9012HH	129
CS-9013	123AP
CS-9013HE	123AP
CS-9013HG	128
CS-9013HH	106
CS-9014	161
CS-9014B	123AP
CS-9014D	123AP
CS-9015D	159
CS-9016	108
CS-9016D	107
CS-9016F	108
CS-9018	108
CS-9018D	123AP
CS-9018E	108
CS-9018F	108
CS-9018G	108
CS-9018H	108
CS-9104	123AP
CS-9125B	123AP
CS-12941	123AP
CS-90111	123AP
CSM3B1	5454
CSM3B2	5455
CSO68-8	614
CST1739	104
CST1740	104
CST1741	104
CST1742	104
CST1743	121
CST1744	121
CST1745	121
CST1746	121
CT11-1A	5640
CT11-2A	5641
CT11-4A	5642
CT12-1A	5640
CT12-2A	5641
CT12-4A	5642
CT16X7	178MP
CT16XT	113A
CT30-1A	5650
CT30-2A	5651
CT30-4A	5642
CT31-1A	5640
CT31-2A	5641
CT31-4A	5642
CT32-05N	5673
CT32-1A	5640
CT32-1N	5673
CT32-2A	5641
CT32-2N	5673
CT32-4A	5642
CT32-4N	5675
CT32-6A	5643
CT32-6N	5677
CT33-1A	5650
CT33-2A	5651
CT33-4A	5652
CT62-05N	5673
CT62-1N	5673
CT62-2N	5673
CT62-4N	5675
CT62-5N	5676
CT62-6N	5677
CT82-2N	5673
CT82-4N	5675
CT82-6N	5677
CT100	116
CT102-05N	5673
CT102-1N	5673
CT102-2N	5673
CT102-4N	5675
CT102-5N	5676
CT152-05N	5673
CT152-2N	5673
CT152-4N	5675
CT152-5N	5676
CT152-IN	5673
CT200	116
CT300	116
CT302-2N	5693
CT302-4N	5695
CT302-6N	5697
CT401-2N	5693
CT401-4N	5695
CT401-6N	5697
CT402-2N	5693
CT461	109
CT600	116
CT1009	102A
CT1012	107
CT1013	107
CT1017	158
CT1018	161
CT1019	161
CT1020	161
CT1021	161
CT1022	102
CT1023	102
CT1024	102
CT1122	121
CT1124	121
CT1124A	121
CT1124B	121
CT1300	108
CT1500	108
CT2002	109
CT2005	110MP
CT2006	614
CT2007	109
CT2008	110MP
CT3003	116
CT3005	116
CT3005(RATIO DET.)	110MP
CT6776	154
CT-06C	230
CT-1087	85
CT-1090	85
CT-1093	289A
CT-1097	199
CT-1106	85
CT-2002	109
CT-2005	109
CT-2017	614
CT-2035	614
CT-2040	519
CT-2058	3007
CT-3003	116
CT-3005	116
CT-3017	116
CT-4017	1206
CT-4021	824
CT-4022	1154
CT-4024	950
CTB-24	6085
CTB-34	6090
CTC-TX50	318
CTC-TX100	317
CTL-2S	6240
CTL-22S	6240
CTM-21S	6240
CTM-22S	6240
CTM-24S	6241
CTM-26S	6241
CTN50	125
CTN100	125
CTN200	116
CTN300	125
CTN400	125
CTN500	125
CTN600	125
CTN800	125
CTN1000	125
CTP50	125
CTP100	125
CTP200	125
CTP300	125
CTP400	125
CTP461	109
CTP500	125
CTP573	109
CTP600	125
CTP800	125
CTP1000	125
CTP1032	102A
CTP1033	102A
CTP1034	102A
CTP1035	102A
CTP1036	102A
CTP1104	104
CTP1106	104
CTP1108	104
CTP1109	104
CTP1111	121
CTP1117	104
CTP1119	104
CTP1124	121
CTP1133	121
CTP1135	121
CTP1136	121
CTP1137	121
CTP1265	121
CTP1266	121
CTP1296	121
CTP1297	121
CTP1306	121
CTP1307	121
CTP1500	121
CTP1503	121
CTP1504	121
CTP1508	121
CTP1509	105
CTP1511	121
CTP1512	105
CTP1513	121
CTP1514	121
CTP1544	179
CTP1545	179
CTP1550	121
CTP1551	121
CTP1552	179
CTP1553	179
CTP1728	121
CTP1729	121
CTP1730	121
CTP1731	121
CTP1732	121
CTP1733	121
CTP1735	121
CTP1736	121
CTP1739	121
CTP1740	104
CTP2076-1001	102A
CTP2076-1002	102A
CTP2076-1003	102A
CTP2076-1004	102A
CTP2076-1005	102A
CTP2076-1006	102A
CTP2076-1007	102A
CTP2076-1008	102A
CTP2076-1009	102A
CTP2076-1010	102A
CTP2076-1011	102A
CTP2076-1012	102A
CTP3500	121
CTP3503	121
CTP3504	121
CTP3508	121
CTP3544	179
CTP3545	179
CTP3552	179
CTP3553	179
CTP-461	109
CTP-2001-1001	102A
CTP-2001-1002	102A
CTP-2001-1003	102A
CTP-2001-1004	102A
CTP-2001-1007	123AP
CTP-2001-1008	123AP
CTP-2001-1009	102A
CTP-2001-1010	109
CTP-2001-1011	116
CTP-2001-1012	116
CTP-2006-1001	102A
CTP-2006-1002	102A
CTP-2006-1003	102A
CTP-2006-1004	109
CTU12S	6240
CTU22R	116
CTU125	6240
CTU-2R	116
CTU-11S	6240
CTU-12S	6240
CTU-14S	6241
CTU-16S	6241
CTU-21S	6240
CTU-22S	6240
CTU-24S	6241
CTU-26S	6241
CU12B	5454
CU12C	5455
CU12D	5456
CU-12E	5455
CUA709CL	909
CUA709CN	909D
CUA709CP	909
CUA741CJ	941D
CUA741CL	941
CUA741CN	941D
CUA741CP	941M
CV12E	457
CV425	109
CV442	109
CVJ70653	614
CW2082G	159
CX0040	116
CX0050	135A
CX0036	109
CX0037	116
CX0039	116
CX0041	109
CX0042	110MP
CX0045	109
CX0047	116
CX0048	116
CX0049	116
CX0051	140A
CX0052	142A
CX0054	5804
CX064	1311
CX065	1300
CX065A	1300
CX065B	1300
CX075B	1301
CX089	1096
CX089D	1096
CX093D	712
CX095	1308
CX095A	1308
CX095C	1308
CX095D	1308
CX095E	1308
CX135	1596
CX143	1582
CX143A	1582
CX157	1312
CX161A	1309
CX170	1303
CX172	1304
CX177	1306
CX177B	1306
CX556	1416
CX556A	1416
CX556B	1416
CX557	1417
CX557B	1417
CX843	1418
CX843B	1418
CX5575	1417
CX9001	116
CX20112	15007
CX-0040	116
CX-0031	109
CX-0033	109
CX-0035	116
CX-0036	109
CX-0037	116
CX-0039	116
CX-0041	614
CX-0042	109
CX-0045	109
CX-0047	109
CX-0048	116
CX-0049	5079A
CX-0051	138A
CX-0052	142A
CX-0054	116
CX-0055	177
CX-075B	1301
CX-093	712
CX-095C	1308
CX-095D	1308
CX-135	1596
CX-143	1582
CX-143A	1582
CX-556	1416
CX-557	1417
CX-843	1308
CX-9001	116
CXA1011	15023
CXA1011P	15023
CXA10119	15023
CXL100	100
CXL101	103
CXL102	102
CXL102A	126
CXL103	103
CXL104	104
CXL104MP	104MP
CXL105	105
CXL106	106
CXL107	107
CXL108	108
CXL109	109
CXL110	109
CXL112	112
CXL113	113A
CXL116	116
CXL117	116
CXL118	118
CXL120	120
CXL121	121
CXL121MP	121
CXL123	5494
CXL123A	123AP
CXL124	124
CXL125	156
CXL126	126
CXL127	127
CXL128	128
CXL129	129
CXL130	130
CXL130MP	130MP
CXL131	131
CXL131MP	131
CXL132	133
CXL133	133
CXL134	134A
CXL135	135A
CXL137	137A
CXL138	138A
CXL139	139A
CXL140	140A
CXL141	5074A
CXL142	142A
CXL143	143A
CXL144	144A
CXL145	145A
CXL146	146A
CXL147	147A
CXL148	148A
CXL149	149A
CXL150	150A
CXL151	151A
CXL152	152
CXL153	153
CXL154	154
CXL155	155
CXL156	156
CXL157	157
CXL158	158
CXL159	123AP
CXL160	160
CXL161	161
CXL162	162
CXL163	163A
CXL164	164
CXL165	165
CXL166	166
CXL167	167
CXL168	168
CXL169	169
CXL170	170
CXL171	171
CXL172	172A
CXL173BP	173BP
CXL175	175
CXL176	176
CXL177	177
CXL178MP	177
CXL179	179
CXL180	180
CXL181	181
CXL182	182
CXL183	183
CXL184	184
CXL185	185
CXL186	186
CXL187	187
CXL188	190
CXL189	189
CXL190	190
CXL191	191
CXL192	192
CXL193	193
CXL194	194
CXL195	195A
CXL196	196
CXL197	197
CXL198	198
CXL199	199
CXL210	299
CXL211	211
CXL218	218
CXL219	180
CXL222	222
CXL224	224
CXL225	225
CXL226	226
CXL226MP	226
CXL238	238
CXL309K	309K
CXL503	503
CXL504	504
CXL505	505
CXL506	506
CXL507	506
CXL508	508
CXL509	509
CXL510	510
CXL511	511
CXL512	512
CXL513	513
CXL514	514
CXL519	519
CXL703A	703
CXL704	704
CXL706	1003
CXL708	708
CXL709	709
CXL711	711
CXL714	714
CXL722	722
CXL725	725
CXL726	726
CXL727	727
CXL730	730
CXL731	731
CXL738	738
CXL747	747
CXL749	749
CXL760	760
CXL780	780
CXL783	783
CXL787	787
CXL788	788
CXL949	949
CXL1024	295
CXL1027	1027
CXL1062	1062
CXL1139	1139
CXL5000	5000A
CXL5001	5001A
CXL5002	5002A
CXL5003	5003A
CXL5004	5004A
CXL5005	5066A
CXL5006	134A
CXL5007	5067A
CXL5008	5068A
CXL5009	5069A
CXL5010	135A
CXL5011	136A
CXL5012	5012A
CXL5013	137A
CXL5014	5071A
CXL5015	138A
CXL5016	5072A
CXL5017	5017A
CXL5018	139A
CXL5019	140A
CXL5020	5074A
CXL5021	142A
CXL5022	5022A
CXL5023	5023A
CXL5024	145A
CXL5025	5025A
CXL5026	5026A
CXL5027	5077A
CXL5028	5028A
CXL5029	5079A
CXL5030	5080A
CXL5031	5081A
CXL5032	5032A
CXL5033	146A
CXL5034	5034A
CXL5035	5084A
CXL5036	147A
CXL5037	5037A
CXL5038	5086A
CXL5039	5087A
CXL5040	5088A
CXL5041	5089A
CXL5042	5090A
CXL5043	5091A
CXL5044	149A
CXL5045	5092A
CXL5046	5093A
CXL5047	150A
CXL5048	5094A
CXL5049	5095A
CXL5050	5096A
CXL5051	151A
CXL5052	5097A
CXL5053	5098A
CXL5054	5099A
CXL5055	5100A
CXL5056	5101A
CXL5057	5102A
CXL5058	5103A
CXL5059	5104A
CXL5060	5105A
CXL5061	5061A
CXL5062	5062A
CXL5063	5063A
CXL5064	5064A
CXL5065	5065A
CXL5066	5066A
CXL5067	5067A
CXL5068	5069A
CXL5069	5069A
CXL5070	5070A
CXL5071	5071A
CXL5072	5072A
CXL5073	5073A
CXL5074	5074A
CXL5075	5075A
CXL5076	5076A
CXL5077	5077A
CXL5078	5078A
CXL5079	5079A
CXL5080	5080A
CXL5081	5081A
CXL5082	5082A
CXL5083	5083A
CXL5084	5084A
CXL5085	5086A
CXL5086	5086A
CXL5087	5087A
CXL5088	5088A
CXL5089	5089A
CXL5090	5090A
CXL5091	5091A
CXL5092	5092A
CXL5093	5093A
CXL5094	5094A
CXL5095	5095A
CXL5096	5096A
CXL5097	5097A
CXL5098	5100A
CXL5099	5099A
CXL5100	5100A
CXL5101	5101A
CXL5102	5102A
CXL5103	5103A
CXL5104	5104A
CXL5105	5105A
CXL5111	5111A
CXL5112	5112A
CXL5113	5113A
CXL5114	5114A
CXL5115	5115A
CXL5116	5116A
CXL5117	5117A
CXL5118	5118A
CXL5119	5119A
CXL5120	5120A
CXL5121	5121A
CXL5122	5122A
CXL5123	5123A
CXL5124	5124A
CXL5125	5125A
CXL5126	5126A
CXL5127	5127A
CXL5128	5128A
CXL5129	5129A
CXL5130	5131A
CXL5131	5131A
CXL5132	5132A
CXL5133	5133A
CXL5134	5134A
CXL5135	5135A
CXL5136	5136A
CXL5137	5137A
CXL5138	5138A
CXL5139	5139A
CXL5140	5140A
CXL5141	5141A
CXL5142	5142A
CXL5143	5143A
CXL5144	5144A
CXL5145	5145A
CXL5146	5146A
CXL5147	5147A
CXL5148	5148A
CXL5149	5149A
CXL5150	5150A
CXL5151	5151A
CXL5152	5152A
CXL5153	5153A
CXL5154	5154A
CXL5155	5155A
CXL5156	5156A
CXL5157	5157A
CXL5158	5158A
CXL5159	5159A
CXL5160	5160A
CXL5161	5161A
CXL5162	5162A
CXL5163	5163A
CXL5164	5164A
CXL5165	5165A
CXL5166	5166A
CXL5174	5174A
CXL5175	5175A
CXL5176	5176A
CXL5177	5177A
CXL5178	5178A
CXL5179	5179A
CXL5180	5180A
CXL5181	5181A
CXL5182	5182A
CXL5183	5183A
CXL5184	5184A
CXL5185	5185A
CXL5186	5186A
CXL5187	5187A
CXL5188	5188A
CXL5189	5189A
CXL5190	5190A
CXL5191	5191A
CXL5192	5192A
CXL5193	5193A
CXL5194	5194A
CXL5195	5195A
CXL5196	5196A
CXL5197	5197A
CXL5198	5198A
CXL5199	5199A
CXL5200	5200A
CXL5201	5201A
CXL5202	5202A
CXL5203	5203A
CXL5204	5203A
CXL5205	5205A
CXL5206	5206A
CXL5207	5207A
CXL5208	5208A
CXL5209	5209A
CXL5210	5210A
CXL5211	5211A
CXL5212	5212A
CXL5213	5213A
CXL5214	5214A
CXL5215	5215A
CXL5216	5216A
CXL5217	5217A
CXL5218	5218A
CXL5220	5220A
CXL5221	5221A
CXL5222	5222A
CXL5223	5223A
CXL5224	5224A
CXL5225	5225A
CXL5226	5226A
CXL5227	5227A
CXL5228	5228A
CXL5229	5229A
CXL5230	5230A
CXL5231	5231A
CXL5232	5232A
CXL5240	5240A
CXL5241	5241A
CXL5242	5242A
CXL5243	5243A
CXL5244	5244A
CXL5245	5245A
CXL5246	5246A
CXL5247	5247A
CXL5248	5248A

PART NUMBER	NTE REPLACEMENT
CXL5249	5249A
CXL5250	5250A
CXL5251	5251A
CXL5252	5252A
CXL5253	5253A
CXL5254	5254A
CXL5255	5255A
CXL5256	5256A
CXL5257	5257A
CXL5258	5258A
CXL5259	5259A
CXL5260	5260A
CXL5261	5261A
CXL5262	5262A
CXL5263	5263A
CXL5264	5264A
CXL5265	5265A
CXL5266	5266A
CXL5267	5267A
CXL5268	5268A
CXL5269	5269A
CXL5270	5270A
CXL5271	5271A
CXL5272	5272A
CXL5273	5273A
CXL5274	5274A
CXL5275	5275A
CXL5276	5276A
CXL5277	5277A
CXL5278	5278A
CXL5279	5279A
CXL5280	5280A
CXL5281	5281A
CXL5282	5282A
CXL5283	5283A
CXL5284	5284A
CXL5285	5285A
CXL5286	5286A
CXL5287	5287A
CXL5290	5290A
CXL5291	5291A
CXL5292	5292A
CXL5293	5293A
CXL5294	5294A
CXL5295	5295A
CXL5296	5296A
CXL5400	5400
CXL5401	5401
CXL5402	5402
CXL5403	5403
CXL5404	5404
CXL5452	5455
CXL5453	5455
CXL5454	5455
CXL5455	5455
CXL5456	5456
CXL5457	5457
CXL5461	5461
CXL5462	5462
CXL5463	5463
CXL5465	5465
CXL5470	5494
CXL5471	5494
CXL5472	5494
CXL5473	5494
CXL5474	5494
CXL5475	5475
CXL5476	5476
CXL5480	5480
CXL5481	5481
CXL5482	5482
CXL5483	5483
CXL5484	5484
CXL5485	5485
CXL5486	5486
CXL5487	5487
CXL5491	5545
CXL5492	5545
CXL5494	5545
CXL5496	5506
CXL5500	5545
CXL5501	5545
CXL5502	5545
CXL5503	5545
CXL5504	5504
CXL5505	5545
CXL5506	5545
CXL5507	5545
CXL5508	5508
CXL5511	5511
CXL5512	5512
CXL5513	5513
CXL5514	5545
CXL5515	5515
CXL5516	5516
CXL5517	5517
CXL5518	5518
CXL5519	5519
CXL5520	5545
CXL5521	5545
CXL5522	5545
CXL5523	5545
CXL5524	5494
CXL5525	5545
CXL5526	5545
CXL5527	5545
CXL5528	5528
CXL5529	5529
CXL5530	5530
CXL5531	5531
CXL5540	5545
CXL5541	5545
CXL5542	5545
CXL5543	5543

PART NUMBER	NTE REPLACEMENT
CXL5544	5545
CXL5545	5545
CXL5546	5546
CXL5547	5547
CXL5640	5640
CXL5641	5641
CXL5642	5642
CXL5643	5643
CXL5650	5650
CXL5651	5651
CXL5652	5652
CXL5662	5652
CXL5673	5673
CXL5675	5675
CXL5676	5676
CXL5677	5677
CXL5680	5680
CXL5681	5681
CXL5682	5682
CXL5683	5683
CXL5684	5684
CXL5686	5686
CXL5693	5693
CXL5695	5695
CXL5697	5697
CXL5800	156
CXL5801	156
CXL5802	156
CXL5803	156
CXL5804	156
CXL5805	156
CXL5806	156
CXL5808	156
CXL5809	156
CXL5830	5874
CXL5831	5831
CXL5832	5874
CXL5833	5833
CXL5834	5874
CXL5835	5835
CXL5836	5990
CXL5837	5837
CXL5839	5839
CXL5840	5840
CXL5841	5941
CXL5842	5942
CXL5843	5943
CXL5846	5846
CXL5847	5847
CXL5848	5848
CXL5849	5849
CXL5850	5874
CXL5851	5851
CXL5852	5874
CXL5853	5853
CXL5854	5874
CXL5855	5855
CXL5856	5874
CXL5857	5857
CXL5858	5990
CXL5859	5859
CXL5860	5860
CXL5861	5861
CXL5862	5862
CXL5863	5863
CXL5866	5866
CXL5867	5867
CXL5868	5868
CXL5869	5869
CXL5870	5874
CXL5871	5871
CXL5872	5874
CXL5873	5873
CXL5874	5874
CXL5875	5875
CXL5876	5990
CXL5877	5877
CXL5878	5990
CXL5879	5879
CXL5880	5880
CXL5881	5881
CXL5882	5882
CXL5883	5883
CXL5886	5886
CXL5887	5887
CXL5890	5890
CXL5891	5891
CXL5940	5990
CXL5941	5941
CXL5942	5990
CXL5943	5943
CXL5944	5990
CXL5945	5945
CXL5946	5990
CXL5947	5947
CXL5948	5990
CXL5949	5949
CXL5950	5950
CXL5951	5951
CXL5952	5952
CXL5953	5953
CXL5980	5980
CXL5981	5981
CXL5982	5982
CXL5986	5986
CXL5987	5987
CXL5988	5988
CXL5989	5989
CXL5990	5990
CXL5991	5991
CXL5992	5992
CXL5993	5993
CXL5994	5994
CXL5995	5995

PART NUMBER	NTE REPLACEMENT
CXL5998	5998
CXL5999	5999
CXL6002	6002
CXL6003	6003
CXL6020	6020
CXL6021	6021
CXL6022	6022
CXL6023	6023
CXL6026	6026
CXL6027	6027
CXL6030	6030
CXL6031	6031
CXL6034	6034
CXL6035	6035
CXL6038	6038
CXL6039	6039
CXL6040	6040
CXL6041	6041
CXL6042	6042
CXL6043	6043
CXL6044	6044
CXL6045	6045
CXL6050	6050
CXL6051	6051
CXL6054	6054
CXL6055	6055
CXL6058	6058
CXL6059	6059
CXL6060	6060
CXL6061	6061
CXL6064	6064
CXL6065	6065
CXL6068	6068
CXL6069	6069
CXL6072	6072
CXL6073	6073
CXL6400	6400
CXL6401	6401
CXL6402	6402
CXL6407	6407
CXL6408	6408
CXL6409	6409
CY40	116
CY50	116
CY80	156
CY100	125
CZ092	139A
CZ094	139A
CZ3.9	5067A
CZ25C	5082A
CZ255	5082A
CZ-078	138A
CZ-092	139A
CZ-92	139A
CZB12	142A
CZD010	140A
CZD010-5	140A
CZD012-5	142A
CZD014	144A
CZD014-5	144A
CZD015	145A
CZD015-5	145A
D00D	192
D004	116
D006	107
D008	102A
D009	229
D010	110MP
D020	126
D030	102A
D070	8070
D070-002	8070
D080	127
D090	8090
D0250	175
D0J020A90	5027A
D0J020A900	110MP
D01-100	116
D02S	614
D02Z6-2W	5013A
D05	116
D05G	552
D018	102A
D019	100
D021	102A
D026	126
D028	116
D031	102A
D031(CHAN.MASTER)	123AP
D038	102A
D039MA27TB	605A
D043	102A
D048	123AP
D053	123AP
D057	199
D058	108
D059	102A
D063	160
D069	108
D072	229
D073	160
D076	8076
D078	100
D079	160
D081	8081
D083	103A
D085	8085
D086	160
D087	108
D088	108
D093	109
D096	8096
D098	8098
D0123WX	5652

PART NUMBER	NTE REPLACEMENT
D1-2	109
D1-7	116
D1-8	139A
D1-13	147A
D1-20	177
D1-26	116
D1-52S	116
D1A	123AP
D1A(ZENER)	5072A
D1AT01550	177
D1B	113A
D1C	113A
D1D	125
D1E	116
D1F	506
D1F(ZENER)	149A
D1G	139A
D1H	116
D1I0A243A0	519
D1I0A243AC	519
D1J	116
D1J70542	109
D1J70543	109
D1J70544	116
D1J70545	177
D1K	125
D1K40	552
D1L	116
D1M	136A
D1R5GZ61	125
D1R35	109
D1R38	123AP
D1R100	551
D1S	143A
D1S34	109
D1S1553	177
D1S1554	177
D1S1555	177
D1S1887FA	116
D1S2775-1	552
D1T	144A
D1TH61	125
D1U	5072A
D1VT001320	519
D1VT024720	177
D1W	146A
D1Y	107
D1Z	145A
D1ZBLU	145A
D1ZRED	144A
D1ZVIO	143A
D1ZYEL	145A
D2-1	116
D2-77-1	177
D2B000RH10	552
D2B000RU20	552
D2B000RU30	580
D2B00EU01A	552
D2B00RU1P0	552
D2BF00RU20	552
D2BF0RU4A0	506
D2BFM115MR	116
D2BFM115MS	116
D2BH00EU2Z	552
D2BHRM11C0	125
D2BJ00RU4Z	580
D2BT0EU01A	552
D2E	147A
D2G	141A
D2G-1	141A
D2G-2	141A
D2G-3	142A
D2G-4	142A
D2H	183
D2H(DIODE)	116
D2J	116
D2L0040070	125
D2L0TVR06G	116
D2LFRGP30G	558
D2LT040070	125
D2N	503
D2R31	109
D2R38	123AP
D2SBA40	168
D2U	109
D2X4	116
D2Y	505
D2Z	139A
D2Z-2	146A
D3A	507
D3F	139A
D3G	178MP
D3H	137A
D3N	141A
D3R	116
D3R38	116
D3R39	116
D3S3M	580
D3S4M	580
D3SB10	5309
D3SB60	5310
D3U	116
D3V	116
D3W	142A
D3Y	137A
D3Z	116
D4	113A
D4-2	614
D4C28	128
D4C29	128
D4C30	128
D4C31	128
D4D20	128
D4D21	128

PART NUMBER	NTE REPLACEMENT
D4D22	161
D4D24	123AP
D4D25	123AP
D4D26	123AP
D4H	147A
D4J	147A
D4L	125
D4M	116
D4N	141A
D4P	144A
D4R	109
D4R26	116
D4R39	116
D5B	145A
D5E37	6401
D5E43	6409
D5E44	6401
D5E45	6409
D5E-37	6401
D5E-43	6409
D5E-44	6401
D5E-45	6409
D5G	552
D5H	552
D5J45	6409
D5KC20	6240
D5KC20H	6240
D5LCA20	6240
D5R35	116
D5R39	116
D5V	177
D5W	137A
D6	115
D6.2	137A
D6C	513
D6HZ	116
D6M	5072A
D6U	5080A
D7	115
D7A30	128
D7A31	128
D7A32	128
D7E	177
D7L	5076A
D7M	614
D7N	614
D7Z	177
D8G	506
D8HZ	125
D8L	506
D8M	506
D8U	5073A
D10B1051	107
D10B1055	107
D10DE	116
D10G1051	107
D10G1052	107
D10SC4M	6085
D11C1B1	128
D11C1F1	123AP
D11C2D1B20	123AP
D11C3B1	128
D11C3F1	192
D11C5B1	128
D11C5F1	123AP
D11C7B1	128
D11C10B1	128
D11C10F1	124
D11C11B1	128
D11C11F1	124
D11C201B20	124
D11C203B20	124
D11C205B20	124
D11C207B20	124
D11C210B20	124
D11C211B20	124
D12	130
D13	105
D13K1	6402
D13T1	6402
D13T2	6402
D13TDS442X	519
D13TGMA010	519
D14	106
D15	130
D15A	116
D15C	116
D15T015850	519
D16	130
D16E7	123AP
D16E9	123AP
D16EC18	123AP
D16G6	107
D16K1	107
D16K2	107
D16K3	107
D16K4	107
D16P1	172A
D16P2	172A
D16P4	172A
D16U3	113A
D16U4	113A
D17	144A
D17T001320	519
D17U001310	519
D18	116
D18A12	184
D19	103
D20	103
D21	103
D22	103
D22N	156
D23	103
D23F130TAL	116

PART NUMBER	NTE REPLACEMENT
D23FDFA05G	552
D23FDFC10E	552
D23FDFH10G	552
D23FFH10TG	552
D23TDF05G	552
D23TDFD05G	552
D23TDSA12T	156
D23TDSF10B	116
D23TDSF10T	116
D23TFD05TG	552
D23TFH10TG	552
D24	124
D24A3391	199
D24A3391A	199
D24A3392	199
D24A3393	199
D24A3394	108
D24A3900	199
D24A3900A	199
D24B	124
D24C	124
D24CK	124
D24D	124
D24E	124
D24F	124
D24F00V09G	552
D24F00YO9G	552
D24K	124
D24KC	124
D24KD	124
D24KE	124
D24Y	124
D24YB	124
D24YD	124
D24YE	124
D24YF	124
D24YK	124
D24YLC	124
D24YLD	124
D25	116
D25-02C	6246
D25A	116
D25B	116
D25C	116
D25T5566B0	116
D26A	130
D26B	130
D26B1	107
D26B2	107
D26C	130
D26C1	107
D26C2	107
D26C3	107
D26C4	199
D26C5	199
D26E2	107
D26E-1	199
D26E-2	108
D26E-3	108
D26E-4	161
D26E-5	199
D26E-6	108
D26E-7	199
D26G1	107
D26G-1	161
D27C1	152
D27C2	152
D27C3	152
D27C4	152
D27D1	187
D27D2	187
D27D3	187
D27D4	187
D28	6407
D28-08	506
D28A1	152
D28A2	152
D28A3	152
D28A4	152
D28A5	152
D28A6	152
D28A7	152
D28A9	152
D28A10	152
D28A12	152
D28A13	152
D28B	171
D28D07	192
D28D1	152
D28D2	152
D28D3	152
D28D4	152
D28D5	152
D28D7	152
D28D8	186
D28D10	152
D28E	171
D28F00BB4C	552
D28F00BB40	552
D28F30DF20	156
D28FMI15MS	5006A
D28G10E100	125
D28HRM11C0	125
D28T011E10	116
D28T011E20	116
D29	175
D29-08	515
D29A4	159
D29A5	159
D29A6	159
D29A7	194
D29A8	194
D29A9	159
D29A10	194

PART NUMBER	NTE REPLACEMENT
D29A11	194
D29E01	294
D29E02	294
D29E02J1	294
D29E04	294
D29E04J1	294
D29E05	294
D29E05J1	294
D29E06	294
D29E06J1	294
D29E08	193
D29E08J1	193
D29E09	193
D29E09J1	193
D29E1	290A
D29E1J1	193
D29E2	290A
D29E2J1	193
D29E3	290A
D29E4	290A
D29E4J1	193
D29E5	290A
D29E5J1	193
D29E6	290A
D29E6J1	193
D29E7	290A
D29E7J1	193
D29E8	159
D29E8J1	193
D29E9	193
D29E9J1	193
D29E10	193
D29E10J1	193
D29F1	234
D29F2	234
D29F3	234
D29F4	234
D29F5	159
D29F6	159
D29F7	159
D30	116
D30-0	103A
D30-N	103A
D30A1	159
D30A2	159
D30A3	159
D30A4	159
D30A5	159
D31	103A
D31D	103A
D32	103A
D32(DIAC)	6408
D32K1	123AP
D32K2	123AP
D32P1	199
D32P2	199
D32P3	199
D32P4	199
D33	103A
D33C	103A
D33D21	123AP
D33D21J1	192
D33D22	123AP
D33D22J1	192
D33D22J2	293
D33D24	123AP
D33D24J1	192
D33D25	123AP
D33D25J1	192
D33D26	123AP
D33D26J1	192
D33D27	123AP
D33D27J1	192
D33D28	123AP
D33D28J1	192
D33D29	192
D33D29J1	192
D33D30	192
D33D30J1	192
D33E01J1	294
D33E02J1	294
D34	103A
D35	103A
D36	101
D37	103A
D37A	103A
D37B	103A
D37C	103A
D38	103A
D38L1	46
D38L2	46
D38L4	46
D38L5	46
D40	6411
D40C1	265
D40C2	266
D40C3	267
D40C4	265
D40C5	266
D40C7	265
D40C8	266
D40D1	210
D40D2	210
D40D4	210
D40D5	210
D40D7	210
D40D8	210
D40D9	210
D40D10	210
D40D11	210
D40D14	210
D40E1	210
D40E5	186
D40E7	210

PART NUMBER	NTE REPLACEMENT
D40K1	268
D40K2	268
D40N1	171
D40N2	171
D40N3	171
D40N4	171
D40P3	171
D40V1	228A
D40V2	228A
D40V3	228A
D40V4	228A
D40V5	228A
D40V6	228A
D41	130
D41D1	211
D41D2	211
D41D4	211
D41D5	211
D41D7	211
D41D8	211
D41D10	211
D41D11	211
D41D14	211
D41E1	211
D41E5	211
D41E7	211
D41K1	269
D41K2	269
D42C1	186
D42C2	186
D42C3	186
D42C3U	186
D42C4	186
D42C5	186
D42C6	186
D42C7	186
D42C8	186
D43	101
D43A	101
D43C1	187
D43C2	187
D43C3	187
D43C3U	187
D43C4	187
D43C5	187
D43C6	187
D43C7	153
D43C8	187
D44	101
D44C1	377
D44C3	377
D44C4	377
D44C5	377
D44C6	377
D44C7	377
D44C8B	377
D44C9	377
D44C10	377
D44C12	377
D44C88	186
D44CBB	152
D44E1	263
D44E2	263
D44E3	263
D44H1	377
D44H2	377
D44H3	377
D44H4	377
D44H5	377
D44H7	377
D44H8	377
D44H9	377
D44H10	377
D44H11	377
D44Q3	51
D44Q5	51
D44R1	198
D44R2	198
D44R3	198
D44R4	198
D44R5	198
D44R6	198
D44R8	198
D44VM1	377
D44VM4	377
D44VM10	377
D45	162
D45C	116
D45C1	378
D45C2	378
D45C3	378
D45C4	378
D45C5	378
D45C6	378
D45C7	378
D45C8	378
D45C9	378
D45C10	378
D45C11	378
D45C12	378
D45CZ	116
D45D1	262
D45E1	264
D45E2	264
D45E3	264
D45H1	378
D45H2	378
D45H4	378
D45H5	378
D45H6	378
D45H7	378
D45H8	378
D45H9	378
D45H10	378
D45H11	378
D45H12	378
D45H-5	378
D46	162
D47	162
D48	116
D49	175
D49D3	210
D50	116
D51	113A
D53	130
D55	181
D55A	181
D56	175
D56W1	165
D56W2	165
D57	175
D58	175
D59	162
D60	162
D60(DIAC)	6412
D61	103A
D62	103A
D63	103A
D64	103A
D65	126
D65-1	103A
D65C	116
D66	126
D67	162
D67B	162
D67C	162
D67D	162
D67E	162
D68	116
D69	130
D70	175
D71	175
D71L	289
D72	103A
D72-2C	103A
D72-3C	103A
D72-4C	103A
D72A	103A
D72B	103A
D72C	103A
D72RE	103A
D73	280
D73A	280
D73B	280
D73C	280
D73D	280
D73E	280
D73Y	54
D74	280
D74A	280
D74B	280
D74C	280
D74D	280
D74E	280
D75	103A
D75A	103A
D75AH	103A
D75B	103A
D75C	103A
D75H	103A
D77	177
D77(DIODE)	177
D77(TRANS)	103A
D77A	103A
D77AH	103A
D77B	103A
D77C	103A
D77D	103A
D77H	103A
D77P	103A
D79	225
D79A	225
D79B	225
D79C	225
D79D	225
D80	130
D81	130
D81K	116
D82	130
D82A	130
D83	162
D84	162
D84CM1	2388
D84CM2	2388
D84CN1	2388
D84CN2	2388
D84DM1	2388
D84DM2	2388
D84DN1	2388
D84DN2	2388
D85C	125
D88	125
D88A	162
D90	152
D91	152
D91F	152
D92	175
D92D	175
D92F13R6B0	5006A
D92T0200B2	5028A
D92T0300B4	5035A
D92T0110B2	5020A
D92T0150B1	5023A
D92T0270B2	146A
D92T0360B0	5037A
D92T03R9B2	5007A
D92T05R1B2	5010A
D92T05R6B2	5011A
D92T06R2B3	5013A
D92T06R2B2	5013A
D92T06R8B2	5014A
D92T09R1B2	5018A
D92T0360B0	5037A
D92UA3600B	5037A
D93T02000X	5029A
D93T03000Y	5035A
D93T030004	5035A
D93T01300X	5022A
D93T01200Y	5021T1
D93T01300Y	5022A
D93T01100Y	5020A
D93T02700Y	5033A
D93T04R30Y	5068A
D93T04R70X	5009A
D93T05R10X	5010A
D93T05R10Y	5010A
D93T05R60R	5011A
D93T05R60Y	5011A
D93T05R100	5010A
D93T06R20Y	5013A
D93T06R20Z	5013T1
D93T06R80Y	5014A
D93T06R200	5013A
D93T06R804	5014A
D93T07R50Z	5015A
D93T01100Y	5020A
D93T01200Y	5021A
D93T02700Y	5033A
D93T03000Y	5035A
D94	124
D94TA5R1B2	5010A
D94TA6R8J2	5014A
D94TA110J3	5020A
D94UA6R2J2	5013T1
D96	103A
D97U012008	5021T1
D97U05R10B	5010A
D97U05R108	5010A
D97U06R20B	5013A
D97V01200B	5021T1
D98-1.5A	8098
D98-3A	8098
D100	116
D100A	103A
D101B	102A
D102	175
D102-0	175
D102-0	175
D102-R	175
D102-Y	175
D103-0	175
D103-0	175
D103-R	175
D103-Y	175
D104	103A
D105	103A
D105B	102A
D105C	125
D110	162
D110-0	162
D110-2A	8115
D110-0	162
D110-R	162
D110-Y	162
D110A243A0	519
D110A243A0	519
D111	162
D111-0	162
D111-0	162
D111-R	162
D111-Y	162
D113	181
D113-0	181
D113-0	181
D113-R	181
D113-Y	181
D114	181
D114-0	181
D114-0	181
D114-R	181
D114-Y	181
D115	8115
D116	226MP
D117	158
D118-02	8118
D118BL	280
D118R	280
D118Y	280
D119	280
D119BL	280
D119R	280
D119Y	280
D124(RECT.)	116
D124(TRANS)	280
D124A	280
D124AH	280
D124AHA	280
D124B	280
D125	8125
D125-002	8125
D125A	280
D125AH	280
D125AHA	280
D125AHB	280
D126	280
D126-2A	8125
D126-3A	8125
D126-4A	8125
D126-5A	8125
D126A	280
D126AH	280
D126AHA	280
D126AHB	280
D126H	280
D126HA	280
D126HB	280
D127	103A
D127A	103A
D128	103A
D128A	103A
D129	175
D129-BL	175
D129-R	175
D129-Y	175
D130	175
D130-2A	8125
D130-3A	8125
D130-4A	8125
D130-R	175
D130-Y	175
D130BL	175
D130GMA010	519
D132	181
D133	123AP
D133(CHAN.MASTER)	108
D134	126
D134(CHAN. MASTER)	102A
D135	102A
D136	124
D137	124
D139	8139
D141	152
D141(CHAN.MASTER)	108
D141H01	152
D141H9Z	152
D142	175
D142M	175
D143	175
D144	175
D144S	116
D145	175
D145-2A	8149
D145-3A	8149
D145-4A	8149
D145-5A	8149
D146	130
D146UK	130
D147	130
D149	8149
D149-002	8149
D150	175
D151	130
D152	164
D152(CHAN.MASTER)	195A
D154	152
D155	175
D155H	175
D155K	175
D155L	175
D156	158
D157	124
D157B	124
D158	124
D159	124
D160	107
D161	101
D162	101
D163	130
D164	130
D165	162
D166	162
D167	8167
D167-002	8167
D170	103A
D170A	103A
D170AA	103A
D170AB	103A
D170AC	103A
D170B	103A
D170BC	103A
D170C	103A
D170PB	103A
D171	102A
D172	160
D172-F	506
D173	160
D174	160
D175	130
D176	139A
D177	162
D178	103A
D178A	103A
D178Q	103A
D178T	103A
D180	158
D180M	130
D181	8181
D182	128
D183	128
D184	152
D186	103A
D186A	103A
D186B	103A
D187	103A
D187A	103A
D187R	103A
D187Y	103A
D188	130
D188A	130
D188B	130
D188C	130
D189	162
D189A	162
D190	124
D191	103A
D192	103A
D193	103A
D194	103A
D195	101
D195A	101
D198	94
D198H	163A
D198HQ	162
D198HR	162
D198P	162
D198Q	162
D198R	162
D198S	162
D198V	162
D199	162
D200	116
D200A	165
D200MP	177
D201	87
D201(0)	130
D201(0)	130
D201M	130
D201Y	130
D203	162
D204	128
D204L	128
D211	130
D212	130
D213	8213
D215	103
D217	162
D218	162
D219	128
D220	116
D220M	116
D221	128
D223	224
D226	8226
D226-0	175
D226A	175
D226AP	175
D226B	175
D226BP	175
D226P	175
D226Q	175
D227	293
D227(DIODE)	116
D227A	123AP
D227B	123AP
D227C	123AP
D227D	123AP
D227E	123AP
D227F	123AP
D227L	123AP
D227R	123AP
D227S	123AP
D227W	123AP
D228	192
D230DFA05G	552
D232	199
D233	128
D234	152
D234-0	152
D234-0	152
D234-R	152
D234-Y	152
D235	152
D235-0	152
D235-0	152
D235-R	152
D235-Y	152
D235D	152
D235G	152
D235GR	152
D235R	152
D235Y	152
D236(RECT)	166
D236(TRANS)	175
D238	175
D238F	175
D241H	130
D242	8242
D246	165
D254	175
D255	175
D257	175
D261	192
D261A	192
D261B	192
D261C	192
D261D	192
D261E	192
D261F	192
D261L	192
D261P	192
D261R	192
D261V	192
D261W	192
D280F5KF20	597
D283	162
D284	162
D285	162
D286	109
D286D	198
D287	284
D288	152
D288A	152
D288B	152
D288C	152
D288L	152
D289	152
D289A	152
D289B	152
D289C	152
D290	175
D290L	175
D291	175
D292	175
D292(CHAN.MASTER)	107
D294	123AP
D297	175
D299	165
D299SL	165
D300	116
D300B	165
D301	99
D308	199
D312	164
D313	152
D313C	196
D313D	196
D313F	152
D315	175
D317	152
D317A	152
D317F	152
D317P	152
D318	152
D318A	152
D319	181
D320	162
D321	283
D322	280
D322A	280
D322B	280
D322C	280
D323	280
D323A	280
D323B	280
D323C	280
D324	124
D325	152
D325C	152
D325D	152
D325E	152
D325F	152
D327	293
D327A	123AP
D327B	123AP
D327C	123AP
D327D	123AP
D327E	123AP
D327F	123AP
D328	123AP
D328S	210
D330D	152
D334	162
D334A	162
D334R	162
D336	192
D336R	192
D336Y	192
D341	180
D341H	180
D342	123AP
D343	152
D350Q	238
D351	283
D352	158
D352D	103A
D352E	103A
D352F	103A
D353	177
D355	177
D355C	297
D355E	297
D356	291
D356C	291
D356D	291
D356E	291
D357	291
D357C	291
D357D	291
D358	291
D358C	291
D358D	291
D358E	291
D359	152
D359C	152
D359C2	152
D359D	152
D359D1	152
D359D2	152
D359E	152
D360	152
D360C	152
D360D	235
D360E	152
D365H	152
D366-0	152
D366P	152
D366Q	152
D367	103A
D367A	103A
D367B	103A
D367C	103A
D367D	103A
D367E	103A
D367F	103A
D367P	103A
D368	1047
D369	1081A
D369-0	284
D372BL	123AP
D379	284
D379P	284
D379Q	284
D379R	284
D379S	284
D380	238
D381	291
D381A	291
D381L	291
D381M	291
D382	152
D382LM	152
D383	283
D386A	375
D386D	375
D386Y	375
D387AF	375
D389	152
D389-0	152
D389-0P	152
D389A	152
D389AFP	152
D389B	152
D389BL	152
D389D	152
D389LB	152
D400	116
D400(TRANS)	293
D400D	293
D400E	382
D400F	293
D400P1	293
D400P1D	293
D400P1E	293
D400P1F	293
D401	375
D401AK	375
D401AL(JAPAN)	375
D401EK	291
D401I	291
D401K	291
D401L	291
D401LA	291
D401Y	375
D416C	2117
D418	165
D424	284
D424-0	284
D424-R	284
D425	280
D425O	280
D431-F	506
D451S5277B	116
D458	163A
D468B	287
D468C	287
D471	293
D471L	289
D478	375
D478BS	375
D478CS	375
D500	116
D513	152
D560EU2	552
D562	108
D571K(JAPAN)	315
D600	116
D601	116
D620D12200	605A
D621	62
D636-Q	16
D636-R	16
D637-Q	16
D637-R	16
D637-S	16
D649	165
D661-R	16
D718	36
D718-R	36
D720D	103A
D720E	103A
D735B	92
D735C	92
D743	291
D754	123AP
D754B	123AP
D754C	123AP
D762-0	152
D762P	152
D762Q	152
D773K	293
D774	382
D774K	382
D780C-1	3880
D788C	293
D788D	293
D789C	315
D789C(JAPAN)	315
D789D	315
D794P	184
D800	125
D803Q	247
D804B	152
D804H	152
D804HLP	152
D804L	152
D818	173BP
D836Q	261
D836R	261
D837AQ	261
D837AR	261
D837Q	161
D837R	261
D838	62
D856LB	377
D856M	377
D856P	241
D856R	241
D858Q	241

PART NUMBER	NTE REPLACEMENT
D863	382
D866Q	377
D866R	377
D869	89
D870	89
D870A	89
D880	152
D880-0	152
D880-Y	152
D880Y	152
D882P	184
D886(TRANS)	56
D889Q	85
D889R	85
D889T	199
D892A	46
D892AR	46
D895(TRANS)	36
D896(TRANS)	36
D897A	89
D898A	89
D898D	89
D900B	89
D908(TRANS)	36
D909(TRANS)	36
D910(TRANS)	36
D912	123AP
D919(BCE)	85
D940W01120	142A
D950Q	389
D958S	90
D958T	90
D958U	90
D959(TRANS)	54
D960(TRANS)	54
D960Q	291
D961(TRANS)	54
D975	112
D976	112
D986	253
D1000	125
D1046(TRANS)	36
D1047(TRANS)	36
D1052(TRANS)	56
D1052A	56
D1054(TRANS)	52
D1060	383
D1060(JAPAN)	383
D1063Q	2304
D1063R	2304
D1063S	2304
D1064	390
D1064(JAPAN)	390
D1064(TRANS)	36
D1064Q	2304
D1064R	2304
D1064S	2304
D1065	2304
D1065Q	2304
D1065R	2304
D1065S	2304
D1092	2330
D1101	133
D1102	133
D1110(TRANS)	36
D1133D	291
D1135-5	291
D1138C	375
D1168	238
D1172S	116
D1175	89
D1177	133
D1178	133
D1180	133
D1181	133
D1195	261
D1197	270
D1201	53
D1201A	125
D1201B	125
D1201D	125
D1201F	116
D1201M	125
D1201N	125
D1201P	125
D1202(TRANS)	53
D1203(TRANS)	53
D1217	2332
D1217P	2332
D1217Q	2332
D1217R	2332
D1223	2351
D1234(TRANS)	53
D1235(TRANS)	54
D1236(TRANS)	54
D1237(TRANS)	54
D1246T	11
D1264P	375
D1265-0	377
D1265P	377
D1266AQ	377
D1266P	377
D1266Q	377
D1271	54
D1271-Q	54
D1271-R	54
D1271BP	54
D1271Q	54
D1271R	54
D1274B	54
D1275	261
D1275A	261
D1277B	261
D1294	270
D1301	133
D1302	133
D1303	133
D1330	13
D1330-R	13
D1330-S	13
D1330-T	13
D1330R	13
D1330S	13
D1330T	13
D1392	2334
D1393	2332
D1394	2332
D1395	2334
D1397	2302
D1398	2302
D1406	377
D1406Y	377
D1420	133
D1421	133
D1423	2361
D1423A	2361
D1423AQ	2361
D1423AR	2361
D1423AS	2361
D1423Q	2361
D1423R	2361
D1423S	2361
D1426	2302
D1427	2302
D1428	2302
D1439	2302
D1439P	2302
D1439Q	2302
D1441	2302
D1445	116
D1455	2302
D1458	16006
D1481	2332
D1497	2300
D1554	2302
D1555	2302
D1585K	291
D1647	2332
D1649	2302
D1650	2302
D1651	2302
D1652	2302
D1666	108
D1876	2331
D1877	2331
D1878	2331
D1879	2331
D1911	2302
D1913R	152
D1914	2300
D1941	2300
D2101S	515
D2102S	515
D2103S	515
D2103SF	515
D2166P	377
D2201A	515
D2201B	515
D2201D	515
D2201F	515
D2201M	515
D2201N	515
D2520A	6006
D2520B	6006
D2520C	6008
D2520D	6008
D2520F	6006
D2520M	6010
D2540A	6006
D2540B	6006
D2540D	6008
D2540F	6006
D2540M	6010
D2600EF	116
D2600F	515
D2600M	515
D2601A	515
D2601B	515
D2601D	515
D2601E	515
D2601F	515
D2601M	515
D2601N	515
D2708	2708
D2716	2716
D2716D	2716
D2732	2732A
D2732A	2732A
D2732D	2732A
D2764D	2764
D3005VN	130
D3202Y	6408
D3356	177
D3436	116
D3500	238
D3530	112
D4002BC	4002B
D4011BC	4011B
D4012BC	4012B
D4013BC	4013B
D4017BC	4017B
D4027BC	4027B
D4030BC	4030B
D4040BC	4040B
D4049UBC	4049
D4052BC	4052B
D4053	4053B
D4053BC	4053B
D4066BC	4066B
D4069C	4069
D4069UBC	4069
D4160BC	40160B
D4164C-2	2164
D4164C-3	4164
D4164C-15	4164
D4250	280
D5410	HVD-4
D6462	177
D6623	116
D6623A	116
D6624	116
D6624A	116
D6625	116
D6625A	116
D6726	177
D7498	HVD-3
D8255AC-2	8255
D8255AC-5	8255
D8410	109
D8666P	377
D9634	108
D10167	116
D10168	116
D20000BB40	552
D21489	116
D24000V09G	552
D27128A	21128
D28000BB40	552
D28010ELS6	552
D41256	21256
D41256-15	21256
D41464C-15	2164
D92004R7B0	5009A
D92004R7B1	5009A
D92005R1B0	5010A
D92007R5B0	5015A
D92007R5B1	5015A
D92013R6B0	5006A
D93004R70X	5009A
D93004R70Z	5009A
D93005R10X	5010A
D93005R600	5011A
D93006R80Y	5014A
D93007R50Y	5015A
D93019R11B	139A
D97006R20B	5013A
D101167	116
D280010D10	116
D280010D40	116
D911138-1	128
D911138-2	128
D911138-3	128
D911138-4	128
D911138-5	128
D911138-6	128
D911138-7	128
D917254-2	123AP
D919039-2	519
D921881-1	123AP
D926640-1	123
D928121	123AP
D4000411	909
D6400023GB	600
D9200110B0	5020A
D9200110B2	5020A
D9200110B3	5020A
D9200120B1	5021A
D9200180B0	5027A
D9200300B4	5035A
D34003220-001	177
D34013890-002	74H04
D34014094	175
D92015600B	5090A
D93001000Y	5019A
D93001100Y	5020A
D93001200X	5021A
D93001200Y	5021A
D93001300Y	5022A
D93001300Z	5022A
D93001600Y	5025A
D93002700X	5033A
D93002700Y	5033A
D93003000Y	5035A
D93011201B	142A
D93012701C	5083A
D170001310	177
D92001082	5020A
D93001300	5022A
D-00204R	109
D-00169C	109
D-00184R	177
D-00269C	109
D-00284R	109
D-00369C	138A
D-00384R	116
D-00469C	137A
D-00484R	142A
D-00569C	139A
D-00669C	109
D-05	110MP
D-1S2473	519
D-1SS133	519
D-2	109
D-12	177
D-18	139A
D-30	6408
D-40	6411
D-60	6412
D-215-1	519
D-258	124
D-50492-01	159
D-F1	101
D-F1A	102A
D-GM-2	109
D-TEX-8	904
DA000	116
DA001	116
DA002	116
DA058	125
DA90	109
DA203	519 N3
DA205	177
DA2068	125
DAAY002001	116
DAAY004001	177
DAAY001002	109
DAAY003002	177
DAAY010092	139A
DAJ201	519
DAN201	590
DAN202K	595
DANZ00600	109
DANZ006000	109
DANZ0060000	109
DAP201	519
DAP202	596
DASZ158800	177
DAT1A	126
DAT2	126
DB1A	5332
DB1B	5332
DB1D	5332
DB1F	5332
DB1M	5332
DB1N	5334
DB1P	5334
DB101	5332
DB102	5332
DB103	5332
DB104	5332
DB105	5332
DB610	5317
DB800	5312
DB801	5312
DB802	5313
DB804	5314
DB806	5315
DB808	5316
DB810	5317
DB1500	5322
DB1500W	5322W
DB1501	5322
DB1501W	5322W
DB1502	5322
DB1502W	5322W
DB1504	5324
DB1504W	5324W
DB1506	5326
DB1506W	5326W
DB1508	5327
DB1508W	5327W
DB1510	5328
DB1510W	5328W
DB2504	5324
DB2504W	5324W
DB2506	5326
DB2506W	5326W
DB2508	5327
DB2508W	5327W
DB2510	5328
DB2510W	5328W
DBA10B	166
DBA10C	167
DBA10E	168
DBA10G	169
DBA20C	5313
DBA20E	5314
DBA30B	5312
DBA30C	5313
DBA30E	5314
DBA30G	5315
DBA40-K15	5313
DBA40B	5312
DBA40C	5313
DBA40E	5314
DBA60B	5313
DBA60C	5309
DBA60E	5310
DBAZ073304	198
DBBY005001	235
DBBY003001	186A
DBBY003002	186A
DBCZ073304	123AP
DBCZ073503	289
DBCZ073504	123AP
DBCZ083905	229
DBCZ083906	123AP
DBCZ094504	199
DBCZ037300	199
DBCZ039404	229
DBCZ101800	299
DBCZ136406	123AP
DBCZ176003	306
DBCZ373000	199
DC6(QUASAR)	513
DC8457	177
DC-9	102A
DC-10	102A
DC-12	158
DC-13	109
DCC-10D1-N	116
DCERB12-01	125
DCESAC82-004	6085
DCG00	519
DD003	116
DD006	116
DD007	116
DD04	113A
DD06	115
DD056	116
DD058	125
DD1S954	519
DD31K1200	6220
DD31K1200K	6220
DD31N400	6220
DD31N400K	6220
DD31N800	6220
DD31N800K	6220
DD31N1200	6220
DD31N1200K	6220
DD61N400	6220
DD61N400K	6220
DD61N800	6220
DD61N800K	6220
DD61N1200	6220
DD61N1200K	6220
DD65N400	6230
DD65N400K	6230
DD65N800	6230
DD65N800K	6230
DD65N1200	6230
DD65N1200K	6230
DD76N1200K	6220
DD85N400	6230
DD85N400K	6230
DD85N800	6230
DD85N800K	6230
DD85N1200	6230
DD85N1200K	6230
DD175C	116
DD176C	116
DD177C	116
DD236	116
DD266	116
DD268	125
DD2066	116
DD2068	125
DD2320	116
DD2321	116
DD-000	116
DD-003	116
DD-006	116
DD-007	116
DD-79D107-1	130
DDAY008001	5013A
DDAY009001	135A
DDAY090001	177
DDAY001001	109
DDAY002001	116
DDAY004001	177
DDAY006002	614
DDAY002002	116
DDAY001002	109
DDAY010002	139A
DDAY008003	5072A
DDAY009003	5075A
DDAY001004	109
DDAY010005	139A
DDAY009007	5075A
DDAY010007	5015A
DDAY067001	612
DDAY069001	519
DDAY048001	177
DDAY042001	116
DDAY047001	519
DDAY047005	177
DDAY048007	519
DDAY048008	177
DDAY001010	109
DDAY008020	138A
DDAY001022	109
DDAY048012	519
DDAY048013	177
DDAY048014	519
DDAY101001	109
DDAY103001	116
DDAY108001	138A
DDAY126001	139A
DDAY-048001	519
DDBY008001	129
DDBY002001	116
DDBY003001	294
DDBY004001	290
DDBY003002	294
DDBY003003	234
DDBY104002	294
DDBY209003	319P
DDBY216002	229
DDBY219001	229
DDBY222002	123AP
DDBY224001	199
DDBY224003	199
DDBY224004	199
DDBY224006	199
DDBY227001	186A
DDBY227004	186A
DDBY228001	236
DDBY230001	235
DDBY231002	236
DDBY233001	123AP
DDBY246001	295
DDBY256001	295
DDBY257001	235
DDBY259001	229
DDBY259002	229
DDBY261002	229
DDBY262001	199
DDBY269001	316
DDBY270001	123AP
DDBY272001	293
DDBY273001	289
DDBY277002	107
DDBY278001	152
DDBY278002	152
DDBY283001	123AP
DDBY287001	229
DDBY288001	295
DDBY289001	235
DDBY295002	229
DDBY299001	199
DDBY301001	123AP
DDBY307003	236
DDBY407001	152
DDBY407004	196
DDBY410001	128
DDBY410002	128
DDBY4233001	199
DDCY006001	312
DDCY001002	312
DDCY007002	290
DDCY002002	132
DDCY104001	222
DDCY104003	222
DDD-S1VB20	167
DDE-201	116
DDEY030001	7400
DDEY004001	1100
DDEY084001	4011B
DDEY088001	977
DDEY042001	977
DDEY027001	1081A
DDEY055001	1198
DDEY093001	977
DDEY089001	4011B
DDEY029001	7490
DDEY087001	1203
DDEY015001	74162
DDEY028001	964
DDEY097001	1195
DDEY064001	1082
DDEY109001	1192
DDEY123001	1170
DDEY130001	1249
DDEY131001	1271
DDEY133001	1262
DDFY020001	601
DDFY007001	601
DDFY004002	177
DDFY021001	605A
DDFY017001	6402
DDFY055001	1198
DDMV-1	109
DDMV-2	109
DE2A	519
DE3	519
DE14	116
DE14A	116
DE16	116
DE16A	116
DE201	116
DE-201	116
DE-3181	102
DED4191	159
DEEY004001	1100
DER1	125
DERB26-20	525
DF005	5332
DF005M	5332
DF01	5332
DF01M	5332
DF02	5332
DF02M	5332
DF04	5332
DF04M	5332
DF06	5332
DF06M	5332
DF08	5334
DF08M	5334
DF1	101
DF10	5334
DF10M	5334
DF64D	125
DF-2	130
DF-1081-DE	74LS280
DFA01	558
DFA01C	558
DFA01G	558
DFA01J	558
DFA01L	558
DFA01R	558
DFA05	552
DFA05B	552
DFA05C	552
DFA05E	552
DFA05G	552
DFA05G-KB4	552
DFA05G-KBG	552
DFA1A2	552
DFA1A4	552
DFA1A4-T3	552
DFA1A4-Z	552
DFB03R	558
DFB05	552
DFB05B	552
DFB05C	552
DFB05E	552
DFB05G	552
DFB20B	506
DFB20C	506
DFB20E	506
DFB20G	506
DFB20J	506
DFB20L	506
DFC03G	558
DFC03J	558
DFC03L	558
DFC05	558
DFC05J	558
DFC05L	558
DFC05N	558
DFC05R	558
DFC10	552
DFC10E	552
DFC10E-KB4	552
DFC10G	552
DFC15B	506
DFC15C	506
DFC15E	506
DFC15G	506
DFC15J	506
DFC15L	506
DFC15L-KC5	506
DFC15N	506
DFD05B	558
DFD05C	558
DFD05E	558
DFD05G	552
DFD05TG	552
DFD05TG-BT	552
DFD30B	580
DFD30C	580
DFD30E	580
DFD30G	580
DFD05G	552
DFEQA02-03C	5036A
DFEQA02-05C	5010A
DFEQA02-06	5012A
DFEQA02-06A	5011A
DFEQA02-06C	5012A
DFEQA02-06CDE	5013A
DFEQA02-06D	5012A
DFEQA02-08A	5015A
DFEQA02-08D	5016A
DFEQA02-09D	5019A
DFEQA02-10B	5019A
DFEQA02-10C	5019A
DFEQA02-12B	5022A
DFEQA02-16A	5025A
DFEQA02-23A	5031A
DFEQA02-30C	5036A
DFEQA02-35B	5037A
DFERA81-004	116
DFERB12-01	552
DFERB12-02	552
DFERC04-02	125
DFERC04-02F	580
DFFY007001	177
DFH10B	552
DFH10C	552
DFH10E	552
DFH10G	552
DFH10G-KB4	116
DFH10GKB4	552
DFH10J	558
DFH10L	558
DFH10N	558
DFH10R	558
DFH10TG	552
DFH10TG-AT1	552
DFH10TG-KB4	552
DFH10TH-AT1	552
DFM1A2	552
DFM1A4	552
DFM1SA4	552
DG1N	116
DG1N60	109
DG1NR	506
DG1PR	116
DG1S34	109
DG1S188	109
DG1S188-FM	109
DG-1N	506
DG-1NR	506
DGDS13EE	116
DGDS135D	125
DGDS135E	116
DGDS442	177
DGDS442X	519
DGDSB15C	125
DGDSF10C	552
DGGA5.1X	5010A
DGGMA01	519
DGGMA01-L	177
DGGZA3.9-X	5007A
DGGZA3.9X	5007A
DGGZA4.3-Y	5068A
DGGZA4.3Y	5068A
DGGZA5.1-X	5010A
DGGZA5.1-Y	5010A
DGGZA5.1-Z	5010A
DGGZA5.1Y	5010A
DGGZA5.6-Y	5011A
DGGZA6.2	5013A
DGGZA6.2-X	5013A
DGGZA6.2-XYZ	5013A
DGGZA6.2-Y	5013A
DGGZA6.2X	5013A
DGGZA7.5-Y	5015A
DGGZA7.5Y	5015A
DGGZA8.2-Y	5016A
DGGZA9.1-Z	5018A
DGGZA9.1Z	5019A
DGGZA10-T	5019A
DGGZA10-Y	5019A
DGGZA10-Z	5019A
DGGZA10Y	5019A
DGGZA13-X	5022A
DGGZA13X	5022A

PART NUMBER	NTE REPLACEMENT
DGGZA16-Y	5025A
DGGZA22-Z	5031A
DGGZA24-Y	5031A
DGGZA27-Y	146A
DGGZA30	5036A
DGGZA36-Y	5037A
DGGZA36Y	5037A
DGGZA39-Y	5038A
DGGZM6.2-B2	5013A
DGGZM7.5-B2	5015A
DGGZM8.2-B2	5016A
DGGZM9.1-B2	5018A
DGGZM20-B2	5029A
DGGZM24-B2	5031A
DGGZM24-B4	5031A
DGIN	506
DGL5630	615P
DGM3	109
DGM-2	109
DGM-3	109
DGS4B10	5313
DH1S2076	519
DH1S2076A	519
DH4R2	116
DH14	116
DH14A	116
DH16	116
DH16A	116
DH-001	116
DH-002	116
DHD800	177
DHD805	177
DHD805(ZENER)	145A
DHD806	177
DHD8001	177
DHHZT33	615P
DI7	116
DI42S	116
DI46	116
DI52S	116
DI56	116
DI72S	116
DI645	116
DI646	116
DI650	125
DI1649	116
DI32167-406-480	519
DI-1	109
DI-2	109
DI-3	177
DI-5	5002A
DI-7	116
DI-8	139A
DI-8(COURIER)	139A
DI-8(DIODE)	109
DI-20	177
DI-42S	116
DI-46	116
DI-52S	116
DI-55	116
DI-56	116
DI-71	116
DI-72S	116
DI-172S	116
DI-645	116
DI-646	116
DI-647	116
DI-648	116
DI-649	116
DI-650	125
DI-705	116
DI-1649	116
DIA	5072A
DIAM01Z	116
DIB	113A
DIC	113A
DICR1	125
DID	125
DIDS442X	519
DIDS448-FA1	519
DIE	116
DIJ	116
DIJ61224	109
DIJ70485	614
DIJ70486	177
DIJ70488	116
DIJ70542	109
DIJ70543	110MP
DIJ70544	116
DIJ70545	177
DIJ70644	110MP
DIJ70645	109
DIJ70646	109
DIJ70695	116
DIJ71273	177
DIJ71711	177
DIJ71776	109
DIJ71777	614
DIJ71778	110MP
DIJ71895-1	178MP
DIJ71958	116
DIJ71959	116
DIJ71960	177
DIJ72163	506
DIJ72164	177
DIJ72165	139A
DIJ72166	109
DIJ72167	506
DIJ72168	116
DIJ72169	5096A
DIJ72170	506
DIJ72171	506
DIJ72172	5073A
DIJ72174	506

PART NUMBER	NTE REPLACEMENT
DIJ72290	506
DIJ72291	506
DIJ72292	156
DIJ72293	137A
DIJ72294	109
DIJ72349	109
DIK	125
DIK40	552
DIL	116
DIM	136A
DIS	143A
DIS1S	116
DIS-1S	116
DIT	144A
DJZ-WZ270	5033A
DK19	109
DK20	109
DK21	109
DK1001FAK	5371
DK1001FQK	5371
DK1002FAK	5371
DK1002FQK	5371
DK1003FAK	5371
DK1003FQK	5371
DK1004FAK	5371
DK1004FQK	5371
DK1005FAK	5371
DK1005FQK	5371
DK1006FAK	5371
DK1006FQK	5371
DK1007FAK	5372
DK1007FQK	5372
DK1008FAK	5372
DK1008FQK	5372
DK1009FAK	5372
DK1009FQK	5372
DK1010FAK	5372
DK1010FQK	5372
DK1011FAK	5372
DK1011FQK	5372
DK1012FAK	5372
DK1012FQK	5372
DK1101FAK	5371
DK1101FQK	5371
DK1102FAK	5371
DK1102FQK	5371
DK1103FAK	5371
DK1103FQK	5371
DK1104FAK	5371
DK1104FQK	5371
DK1105FAK	5371
DK1105FQK	5371
DK1106FAK	5371
DK1106FQK	5371
DK1107FAK	5372
DK1107FQK	5372
DK1108FAK	5372
DK1108FQK	5372
DK1109FAK	5372
DK1109FQK	5372
DK1110FAK	5372
DK1110FQK	5372
DK1111FAK	5372
DK1111FQK	5372
DK1112FAK	5372
DK1112FQK	5372
DK1301FAK	5371
DK1301FQK	5371
DK1302FAK	5371
DK1302FQK	5371
DK1303FAK	5371
DK1303FQK	5371
DK1304FAK	5371
DK1304FQK	5371
DK1305FAK	5371
DK1305FQK	5371
DK1306FAK	5371
DK1306FQK	5371
DK1307FAK	5372
DK1307FQK	5372
DK1308FAK	5372
DK1308FQK	5372
DK1309FAK	5372
DK1309FQK	5372
DK1310FAK	5372
DK1310FQK	5372
DK1311FAK	5372
DK1311FQK	5372
DK1312FAK	5372
DK1312FQK	5372
DK2401FAK	5374
DK2401FQK	5374
DK2402FAK	5374
DK2402FQK	5374
DK2403FAK	5374
DK2403FQK	5374
DK2404FAK	5374
DK2404FQK	5374
DK2405FAK	5374
DK2405FQK	5374
DK2406FAK	5374
DK2406FQK	5374
DK2407FAK	5375
DK2407FQK	5375
DK2408FAK	5375
DK2408FQK	5375
DK2409FAK	5375
DK2409FQK	5375
DK2410FAK	5375
DK2410FQK	5375
DK2411FAK	5375
DK2411FQK	5375
DK2412FAK	5375
DK2412FQK	5375

PART NUMBER	NTE REPLACEMENT
DK2501FAK	5374
DK2501FQK	5374
DK2502FAK	5374
DK2502FQK	5374
DK2503FAK	5374
DK2503FQK	5374
DK2504FAK	5374
DK2504FQK	5374
DK2505FAK	5374
DK2505FQK	5374
DK2506FAK	5374
DK2506FQK	5374
DK2507FAK	5375
DK2507FQK	5375
DK2508FAK	5375
DK2508FQK	5375
DK2509FAK	5375
DK2509FQK	5375
DK2510FAK	5375
DK2510FQK	5375
DK2511FAK	5375
DK2511FQK	5375
DK2512FAK	5375
DK2512FQK	5375
DKEK-04	116
DL005	5332
DL1A	3050
DL10	3050
DL10A	3050
DL101	3051
DL500	3079
DL507	3078
DL701	3065
DL704	3056
DL707	3061
DL707R	3052
DL721	3076
DL722	3077
DL727	3074
DL728	3075
DL1001A	3051
DL-005	5332
DL-1A	3050
DL-10	3050
DL-10A	3050
DL-101	3051
DL-101A	3051
DL-500	3079
DL-507	3078
DL-701	3065
DL-704	3056
DL-707	3061
DL-707R	3052
DL-721	3076
DL-722	3077
DL-727	3074
DL-728	3075
DL-1001A	3051
DM0A90A-M	109
DM9	736
DM11	709
DM11A	737
DM20	744
DM26	721
DM30	721
DM31	709
DM32	744
DM35	806
DM41	737
DM44	743
DM50	983
DM51	788
DM74C925	74C925
DM74H00J	74H00
DM74H00N	74H00
DM74H01J	74H01
DM74H01N	74H01
DM74H04J	74H04
DM74H04N	74H04
DM74H05J	74H05
DM74H05N	74H05
DM74H08J	74H08
DM74H08N	74H08
DM74H10J	74H10
DM74H10N	74H10
DM74H11J	74H11
DM74H11N	74H11
DM74H20J	74H20
DM74H20N	74H20
DM74H21J	74H21
DM74H21N	74H21
DM74H22J	74H22
DM74H22N	74H22
DM74H30J	74H30
DM74H30N	74H30
DM74H40J	74H40
DM74H40N	74H40
DM74H50J	74H50
DM74H50N	74H50
DM74H51J	74H51
DM74H51N	74H51
DM74H52J	74H52
DM74H52N	74H52
DM74H53J	74H53
DM74H53N	74H53
DM74H54J	74H54
DM74H54N	74H54
DM74H55J	74H55
DM74H55N	74H55
DM74H60J	74H60
DM74H60N	74H60
DM74H61J	74H61
DM74H61N	74H61
DM74H62J	74H62

PART NUMBER	NTE REPLACEMENT
DM74H62N	74H62
DM74H71J	74H71
DM74H71N	74H71
DM74H72J	74H72
DM74H72N	74H72
DM74H73J	74H73
DM74H73N	74H73
DM74H74J	74H74
DM74H74N	74H74
DM74H76J	74H76
DM74H76N	74H76
DM74H78J	74H78
DM74H78N	74H78
DM74L93F	74L93
DM74L93J	74L93
DM74L93N	74L93
DM74LS00N	74LS00
DM74LS01	74LS01
DM74LS02	74LS02
DM74LS02N	74LS02
DM74LS03N	74LS03
DM74LS04	74LS04
DM74LS04N	74LS04
DM74LS05	74LS05
DM74LS05N	74LS05
DM74LS08	74LS08
DM74LS08N	74LS08
DM74LS09	74LS09
DM74LS09N	74LS09
DM74LS10	74LS10
DM74LS10N	74LS10
DM74LS11	74LS11
DM74LS14	74LS14
DM74LS14N	74LS14
DM74LS15	74LS15
DM74LS20	74LS20
DM74LS20N	74LS20
DM74LS21	74LS21
DM74LS22	74LS22
DM74LS26	74LS26
DM74LS26N	74LS26
DM74LS27	74LS27
DM74LS27N	74LS27
DM74LS30	74LS30
DM74LS30N	74LS30
DM74LS32	74LS32
DM74LS32N	74LS32
DM74LS33	74LS33
DM74LS33N	74LS33
DM74LS37	74LS37
DM74LS38N	74LS38
DM74LS40	74LS40
DM74LS42	74LS42
DM74LS42N	74LS42
DM74LS48	74LS48
DM74LS49	74LS49
DM74LS51	74LS51
DM74LS51N	74LS51
DM74LS54	74LS54
DM74LS55	74LS55
DM74LS73	74LS73
DM74LS74A	74LS74A
DM74LS74AN	74LS74A
DM74LS75	74LS75
DM74LS78	74LS78
DM74LS78N	74LS78
DM74LS83A	74LS83A
DM74LS85	74LS85
DM74LS86	74LS86
DM74LS86N	74LS86
DM74LS90	74LS90
DM74LS92A	74LS92
DM74LS92AN	74LS92
DM74LS93	74LS93
DM74LS107	74LS107
DM74LS109	74LS109A
DM74LS109AN	74LS109A
DM74LS112	74LS112A
DM74LS112AN	74LS112A
DM74LS113A	74LS113
DM74LS113AN	74LS113
DM74LS114A	74LS114
DM74LS114AN	74LS114
DM74LS123	74LS123
DM74LS125	74LS125A
DM74LS125AN	74LS125A
DM74LS126	74LS126A
DM74LS126A	74LS126A
DM74LS126AN	74LS126A
DM74LS132	74LS132
DM74LS136	74LS136
DM74LS138	74LS138
DM74LS138N	74LS138
DM74LS139	74LS139
DM74LS139N	74LS139
DM74LS151	74LS151
DM74LS151N	74LS151
DM74LS153	74LS153
DM74LS153N	74LS153
DM74LS155	74LS155
DM74LS155N	74LS155
DM74LS156	74LS156
DM74LS156N	74LS156
DM74LS157	74LS157
DM74LS158	74LS158
DM74LS158N	74LS158
DM74LS160	74LS160A
DM74LS160J	74LS160A
DM74LS161	74LS161A
DM74LS161AN	74LS161A
DM74LS162	74LS162A
DM74LS163N	74LS163A
DM74LS164	74LS164
DM74LS166	74LS166

PART NUMBER	NTE REPLACEMENT
DM74LS166N	74LS166
DM74LS168A	74LS168A
DM74LS168AN	74LS168A
DM74LS169A	74LS169A
DM74LS169AN	74LS169A
DM74LS170	74LS170
DM74LS173	74LS173A
DM74LS173A	74LS173A
DM74LS173N	74LS173A
DM74LS174	74S174
DM74LS174N	74LS174
DM74LS175	74LS175
DM74LS175N	74LS175
DM74LS190	74LS190
DM74LS191	74LS191
DM74LS191N	74LS191
DM74LS192	74LS192
DM74LS193	74LS193
DM74LS194A	74LS194A
DM74LS194AN	74LS194A
DM74LS196	74LS196
DM74LS196N	74LS196
DM74LS197	74LS197
DM74LS197N	74LS197
DM74LS221	74LS221
DM74LS240N	74LS240
DM74LS244N	74LS244
DM74LS245N	74LS245
DM74LS247	74LS247
DM74LS248	74LS248
DM74LS249	74LS249
DM74LS251	74LS251
DM74LS251J	74LS251
DM74LS251N	74LS251
DM74LS253	74LS253
DM74LS257	74LS257
DM74LS257BN	74LS257
DM74LS258	74LS258
DM74LS258BN	74LS258
DM74LS266	74LS266
DM74LS279	74LS279
DM74LS279N	74LS279
DM74LS283	74LS283
DM74LS283N	74LS283
DM74LS290	74LS290
DM74LS290N	74LS290
DM74LS293	74LS293
DM74LS293N	74LS293
DM74LS353	74LS353
DM74LS353J	74LS353
DM74LS353N	74LS353
DM74LS365A	74LS365A
DM74LS365AN	74LS365A
DM74LS367	74LS367
DM74LS367AN	74LS367
DM74LS367N	74LS367
DM74LS368	74LS368
DM74LS373	74LS373
DM74LS373J	74LS373
DM74LS373N	74LS373
DM74LS374	74LS374
DM74LS374N	74LS374
DM74LS386	74LS386
DM74LS670	74LS670
DM74S00J	74S00
DM74S00N	74S00
DM74S02	74S02
DM74S03J	74S03
DM74S03N	74S03
DM74S04J	74S04
DM74S04N	74S04
DM74S05J	74S05
DM74S05N	74S05
DM74S10J	74S10
DM74S10N	74S10
DM74S11J	74S11
DM74S11N	74S11
DM74S15	74S15
DM74S15N	74S15
DM74S20	74S20
DM74S20J	74S20
DM74S20N	74S20
DM74S22J	74S22
DM74S22N	74S22
DM74S30	74S30
DM74S40N	74S40
DM74S51	74S51
DM74S51N	74S51
DM74S64N	74S64
DM74S65N	74S65
DM74S74N	74S74
DM74S86N	74S86
DM74S112N	74S112
DM74S113N	74S113
DM74S114N	74S114
DM74S134	74S134
DM74S151N	74S151
DM74S153	74S153
DM74S153N	74S153
DM74S157	74S157
DM74S157N	74S157
DM74S158	74S158
DM74S174N	74S174
DM74S175	74S175
DM74S175N	74S175
DM74S188	74S188
DM74S188N	74S188
DM74S194	74S194
DM74S251	74S251
DM74S257	74S257
DM74S258	74S258
DM74S260	74S260
DM74S287	74S287
DM74S287N	74S287

PART NUMBER	NTE REPLACEMENT
DM74S288	74S288
DM74S288N	74S288
DM74S373N	74S373
DM74S387	74S387
DM74S387AN	74S387
DM74S387N	74S387
DM74S472	74S472
DM74S474	74S474
DM74S474N	74S474
DM74S475	74S475
DM74S475N	74S475
DM74S570	74S570
DM74S570N	74S570
DM74S571	74S571
DM74S571N	74S571
DM74S572	74S572
DM74S572N	74S572
DM74S573	74S573
DM87	834
DM88	787
DM91	964
DM106	981
DM133	1396
DM930N	9930
DM932N	9932
DM933N	9933
DM935N	9935
DM936N	9936
DM937N	9937
DM944N	9944
DM945N	9945
DM946N	9946
DM948N	9948
DM949N	9949
DM958N	9158
DM961N	9961
DM962N	9962
DM963N	9963
DM7400	7400
DM7400J	7400
DM7400N	7400
DM7401J	7401
DM7401N	7401
DM7402J	7402
DM7402N	7402
DM7403J	7403
DM7403N	7403
DM7404N	7404
DM7405N	7405
DM7406N	7406
DM7407N	7407
DM7408J	7408
DM7408N	7408
DM7409J	7409
DM7409N	7409
DM7410J	7410
DM7410N	7410
DM7411J	7411
DM7411N	7411
DM7413N	7413
DM7414N	7414
DM7416N	7416
DM7417N	7417
DM7420J	7420
DM7420N	7420
DM7423J	7423
DM7423N	7423
DM7423W	7423
DM7425J	7425
DM7425N	7425
DM7425W	7425
DM7426N	7426
DM7427J	7427
DM7427N	7427
DM7427W	7427
DM7430J	7430
DM7430N	7430
DM7432J	7432
DM7432N	7432
DM7437J	7437
DM7437N	7437
DM7437W	7437
DM7438J	7438
DM7438N	7438
DM7438W	7438
DM7440J	7440
DM7440N	7440
DM7441AJ	7441
DM7441AN	7441
DM7442J	7442
DM7442N	7442
DM7445J	7445
DM7445N	7445
DM7445W	7445
DM7447AN	7447
DM7447N	7447
DM7448J	7448
DM7448N	7448
DM7448W	7448
DM7450J	7450
DM7450N	7450
DM7451J	7451
DM7451N	7451
DM7453J	7453
DM7453N	7453
DM7454J	7454
DM7454N	7454
DM7460J	7460
DM7470J	7470
DM7470N	7470
DM7472J	7472
DM7472N	7472
DM7473J	7473
DM7473N	7473

PART NUMBER	NTE REPLACEMENT
DM7474J	7474
DM7474M	7474
DM7474N	7474
DM7475J	7475
DM7475N	7475
DM7476J	7476
DM7476N	7476
DM7483N	7483
DM7485N	7485
DM7486J	7486
DM7486N	7486
DM7489N	7489
DM7490	7490
DM7490AN	7490
DM7490J	7490
DM7490N	7490
DM7492J	7492
DM7492N	7492
DM7493J	7493A
DM7493N	7493A
DM7495N	7495
DM7496N	7496
DM7497J	7497
DM8095	74365
DM8095J	74365
DM8095N	74365
DM8096	74366
DM8096J	74366
DM8096N	74366
DM8097	74367
DM8097J	74367
DM8097N	74367
DM8098	74368
DM8098J	74368
DM8098N	74368
DM8123	8123
DM8123N	8123
DM8214	7214
DM8214N	7214
DM8542	8542
DM8542N	8542
DM8546N	8546
DM8551	74173
DM8551J	74173
DM8551N	74173
DM8556	8556
DM8556N	8556
DM8563	74193
DM8563N	74193
DM8602N	9602
DM9093N	9093
DM9094	9094
DM9094N	9094
DM9097N	9097
DM9099N	9099
DM9309	8309
DM9309J	8309
DM9309N	8309
DM74107N	74107
DM74109	74109
DM74121N	74121
DM74123N	74123
DM74125	74125
DM74126	74126
DM74141	74141
DM74141N	74141
DM74145N	74145
DM74147	74147
DM74147J	74147
DM74147N	74147
DM74148	74148
DM74150N	74150
DM74151N	74151
DM74153N	74153
DM74154N	74154
DM74155N	74155
DM74156N	74156
DM74157	74157
DM74157J	74157
DM74157N	74157
DM74160	74160
DM74161	74161
DM74163	74163
DM74164	74164
DM74165	74165
DM74166	74166
DM74170	74170
DM74173	74173
DM74173J	74173
DM74173N	74173
DM74174N	74174
DM74175N	74175
DM74176	74176
DM74177	74177
DM74180N	74180
DM74181N	74181
DM74182N	74182
DM74185A	74185
DM74190N	74190
DM74191N	74191
DM74192N	74192
DM74193N	74193
DM74196N	74196
DM74197N	74197
DM74198N	74198
DM74199N	74199
DM74251	74251
DM74251J	74251
DM74251N	74251
DM74365	74365
DM74365J	74365
DM74365N	74365
DM74366	74366
DM74366J	74366

PART NUMBER	NTE REPLACEMENT
DM74366N	74366
DM74367	74367
DM74367J	74367
DM74367N	74367
DM74368	74368
DM74368J	74368
DM74368N	74368
DM75162	74162
DM75451N	75451B
DM-1	726
DM-9	736
DM-11	709
DM-11A	737
DM-20	744
DM-26	721
DM-30	721
DM-31	709
DM-32	744
DM-35	806
DM-36	801
DM-41	737
DM-44	743
DM-51	788
DM-65	2011
DM-86	4016B
DM-92	964
DM-104	977
DMMA700	584
DMMA4043-H	5008A
DMMA4051-H	5010A
DMMA4051-M	5010A
DMMA4075-M	5015A
DMMA4082-M	5016A
DMMA4091-M	5018A
DMMA4100-M	5019A
DMMA4200-M	5029A
DMMA4270-M	146A
DN	123AP
DN20-00453	128
DN74LS02	74LS02
DN74LS09	74LS09
DN74LS28	74LS28
DN74LS33	74LS33
DN74LS95B	74LS95B
DN74LS125P	74LS125A
DN74LS132	74LS132
DN74LS156	74LS156
DN74LS174	74LS174
DN74LS174P	74LS14
DN74LS194A	74LS194A
DN74LS240P	74LS240
DN74LS244	74LS244
DN74LS245P	74LS245
DN74LS260	74LS260
DN74LS260N	74LS260
DN74LS373	74LS373
DN78LS08	74LS08
DN819	9200
DN852	9403
DN852P	9403
DN1946	9946
DN6838	1705
DN6838A	1705
DN6851H1	804
DND800	177
DNMPC574J	615P
DNRD3.9E-B1	5007A
DNRD5.1E-B3	5010A
DNRD5.6E-B2	5011A
DNRD6.2E	5013A
DNRD6.2E-B1-B3	5013A
DNRD6.2E-B2	5013A
DNRD6.2E-B3	5013A
DNRD6.2L	5013A
DNRD7.5E	5015A
DNRD7.5E-B3	5015A
DNRD7.5F	5015A
DNRD8.2E-B3	5016A
DNRD10E-B1	5019A
DNRD10E-B3	5010A
DNRD10F-B	5019A
DNRD10F-B1	5019A
DNRD11E-B1	5019A
DNRD13E-B2	5022A
DNRD16E-B3	5025A
DNRD24E-B2	5031A
DNRD27E-B4	146A
DNRD33E-B1	5036A
DNRD39E-B1	5037A
DNRD39E-C2	5038A
D019	102
D031	123AP
D038	102
D043	102
D063	160
D078	102
D079	160
D080	104
D081	121
D083	103
D085	103
D086	160
D087	107
D088	107
D0-7	5066A
DP100	125
DR1	116
DR1PR	116
DR2	116
DR3	116
DR4	116
DR5	116
DR100	116
DR200	116
DR291	109
DR300	116
DR351	109
DR352	109
DR365	109
DR385	109
DR400	116
DR426	109
DR427	116
DR434	109
DR435	116
DR449	109
DR464	109
DR500	116
DR600	116
DR668	116
DR669	116
DR670	116
DR671	116
DR695	116
DR698	116
DR699	116
DR700	125
DR800	125
DR826	116
DR848	116
DR863	116
DR900	125
DR1000	125
DR1100	116
DR1575	177
DR5101	116
DR5102	116
DR-104532	5642
DRA01B	5402
DRA01C	5404
DRA01E	5405
DRA03TB	5402
DRA03TC	5404
DRA03TE	5405
DRA03TG	5406
DRA2TB	5454
DRA2TC	5455
DRA2TE	5457
DRA5B	5437
DRA5C	5437
DRA5E	5437
DRA5G	5438
DRA8B	5462
DRA8C	5463
DRA8E	5465
DRA8G	5466
DRB2B	5402
DRB2C	5404
DRB2E	5405
DRC3E	5437
DRC-81252	102
DRC-87540	123
DRD3B	5437
DRD3C	5437
DRD3E	5437
DRD3G	5438
DRS1	116
DRS2	156
DRS101	116
DRS102	116
DRS104	116
DRS106	116
DRS107	125
DRS108	125
DS0065	116
DS1	116
DS1-002-0	177
DS1B	123AP
DS1K	116
DS1K7	116
DS1M	156
DS1N	116
DS1P	116
DS2	101
DS2K	116
DS2M	125
DS2N	116
DS2N22	116
DS3	102A
DS4	101
DS5	101
DS5BN-L	116
DS6	101
DS7	101
DS8	101
DS9	101
DS11	101
DS12	101
DS13	102A
DS14	126
DS15A	125
DS16	102A
DS16A	116
DS16C	116
DS16E	116
DS16N	116
DS16NA	125
DS16NB	116
DS16NC	116
DS16ND	116
DS16NE	116
DS16NE(SONY)	506
DS17	113A
DS17(ADMIRAL)	116
DS17N	116
DS18	115
DS18(SEARS)	116
DS18N	116
DS19	116
DS21	100
DS22	100
DS23	100
DS24	126
DS25	126
DS25-01A	5827
DS25-02A	5827
DS25-03A	5829
DS25-05A	5829
DS25-06A	5829
DS26	102A
DS27	109
DS29	102A
DS31	109
DS31(DELCO)	109
DS32	109
DS33	109
DS33(DELCO)	109
DS34	160
DS35	160
DS35-02A	6027
DS35-04A	6035
DS35-07A	6043
DS36	126
DS37	160
DS38	126
DS38(CRAIG)	116
DS38(DELCO)	160
DS38(SANYO)	116
DS39	110MP
DS41	126
DS42	160
DS43	139A
DS44	85
DS45	123AP
DS46	85
DS47	123AP
DS48	139A
DS50	136A
DS51	126
DS52	126
DS53	100
DS55	614
DS56	160
DS58(SANYO)	116
DS62	160
DS63	160
DS64	160
DS65	160
DS66	123AP
DS67	123AP
DS67W	123AP
DS68	106
DS71	107
DS72	107
DS73	107
DS74	107
DS75	107
DS76	123AP
DS77	123AP
DS78	161
DS79	116
DS81	161
DS82	159
DS83	159
DS85	161
DS86	106
DS88	132
DS89	117
DS96	106
DS97	109
DS97(DELCO)	177
DS99	139A
DS101S5295G	552
DS104	137A
DS113B	506
DS117	177
DS118A	5802
DS118B	5804
DS118C	5806
DS118D	5808
DS118E	5809
DS125-01A	5826
DS125-02A	5826
DS125-03A	5828
DS125-04A	6034
DS125-05A	5828
DS125-06A	5828
DS125-07A	6042
DS130	116
DS130B	116
DS130C	116
DS130D	116
DS130E	116
DS130NB	116
DS130NC	116
DS130ND	116
DS130T	125
DS130TA	125
DS130TAL-FB2	116
DS130TB	125
DS130TC	125
DS130TD	125
DS130TE	125
DS130Y	116
DS130YC	116
DS130YD	116
DS130YE	116
DS131	116
DS131A	113A
DS131B	116
DS132A	116
DS132B	116
DS133A	116
DS133B	506
DS135	116
DS135-07A	6042
DS135C	116
DS135C-AT	552
DS135D	116
DS135D-FA3	552
DS135E	116
DS135F	116
DS149	5072A
DS150	125
DS150A	125
DS150B	125
DS150C	125
DS159	137A
DS160(G.E.)	116
DS189	5074A
DS230A	506
DS230B	506
DS230C	506
DS230D	506
DS330A	506
DS330B	506
DS330C	506
DS410	109
DS410(COURIER)	177
DS410(EMERSON)	177
DS410(FANON)	177
DS410(G.E.)	109
DS410(OLYMPIC)	177
DS410(WESTINGHOUSE)	177
DS410R	177
DS410R(G.E.)	109
DS430	116
DS441	177
DS442	177
DS442-VG1	177
DS442FM	177
DS442S2	177
DS442X	519
DS442X-BT	519
DS443	177
DS446	519
DS448	177
DS448-FA1	519
DS448FA1	519
DS501	105
DS502	105
DS503	121
DS504	105
DS505	105
DS506	105
DS509	130
DS512	128
DS513	152
DS514	130
DS515	121
DS519	130
DS520	104
DS525	105
DS570	105
DS1005-1X8628	519
DS1488	75188
DS1486J	75188
DS1488N	75188
DS1489AN	75189
DS1489N	75189
DS4003	552
DS4148	177
DS5295G	552
DS5295J	552
DS7545O	75450B
DS8870	2027
DS8870J	2027
DS8870N	2027
DS8880	2028
DS8880F	2028
DS8880J	2028
DS8880N	2028
DS8889	2030
DS8889J	2030
DS8889N	2030
DS7545ON	75450B
DS75451	75451B
DS75451N	75451B
DS75452N	75452B
DS75453N	75453B
DS75454N	75454B
DS75491	75491B
DS75491BN	75491B
DS75491N	75491B
DS75492BN	75492B
DS75492N	75492B
DS75493N	75493
DS75494N	75494
DS-0065	116
DS-1	103A
DS-1.5-2	156
DS-1K	125
DS-1M	116
DS-1N	131
DS-1P	116
DS-1U	507
DS-2M	506
DS-2N	156
DS-8	102A
DS-10	116
DS-13	116
DS-13(COURIER)	116
DS-13A(SANYO)	116
DS-13B(SANYO)	116
DS-14	102A
DS-14(DIODE)	116
DS-14(SANYO)	507
DS-15A(SANYO)	506
DS-15B(SANYO)	506
DS-16(SEARS-DIODE)	116
DS-16A	116
DS-16A(SANYO)	125
DS-16B	116
DS-16B(SANYO)	116
DS-16B(SYLVANIA)	116
DS-16C(SANYO)	116
DS-16D	116
DS-16D(SANYO)	116
DS-16E	116
DS-16E(SANYO)	116
DS-16ND	116
DS-16NE	116
DS-16NY	116
DS-16YA	116
DS-17	116
DS-17(SANYO)	116
DS-17-6A	116
DS-18	116
DS-18(DELCO)	109
DS-18(GE)	116
DS-18(SANYO)	116
DS-19	102A
DS-19(RECTIFIER)	116
DS-19(SANYO)	116
DS-22	100
DS-24	126
DS-25	126
DS-26	158
DS-27	109
DS-28(DELCO)	100
DS-31	177
DS-31(DELCO)	177
DS-32	109
DS-33	109
DS-34	160
DS-35	160
DS-36	160
DS-37	160
DS-38	116
DS-39	109
DS-41	126
DS-42	160
DS-43	139A
DS-44	85
DS-45	123AP
DS-46	85
DS-47	123AP
DS-49	5072A
DS-51	160
DS-52	160
DS-53	102
DS-55	614
DS-56	160
DS-60	172A
DS-62	160
DS-63	160
DS-64	160
DS-65	160
DS-66	123AP
DS-66L	123AP
DS-66W	123AP
DS-67	123AP
DS-67W	123AP
DS-68	106
DS-71	107
DS-72	107
DS-73	107
DS-74	199
DS-75	123AP
DS-76	123AP
DS-77	123AP
DS-78	161
DS-79	116
DS-79(DELCO)	116
DS-81	229
DS-82	159
DS-83	159
DS-85	161
DS-86	129
DS-88	132
DS-94	289
DS-97	177
DS-102	222
DS-105	222
DS-106	222
DS-108	142A
DS-110	144A
DS-113	519
DS-113A	506
DS-113B	506
DS-117	177
DS-130	116
DS-130B	116
DS-130C	116
DS-130E	116
DS-130YB	116
DS-130YE	116
DS-131	116
DS-131A	116
DS-131B	116
DS-132	116
DS-132A	116
DS-132B	116
DS-135E	116
DS-149	5072A
DS-159	5071A
DS-189	5074A
DS-410	177
DS-410(AMPEX)	177
DS-410(MOTOROLA)	123AP
DS-430	116
DS-442	177
DS-442(SEARS)	177
DS-501	105
DS-503	121
DS-509	130
DS-512	128
DS-513	152
DS-514	130
DS-515	121
DS-519	130
DS-520	104
DS-781	107
DS-831	159
DS-IM	116
DSA1A2	116
DSA10	125
DSA10G	116
DSA10J	125
DSA10L	125
DSA12B	156
DSA12C	156
DSA12E	156
DSA12EQ	156
DSA12G	156
DSA12T-AT1	156
DSA12TL	156
DSA12TL-AT1	156
DSA17	125
DSA17B	156
DSA17C	156
DSA17E	156
DSA20B	156
DSA20C	156
DSA20E	156
DSA20G	156
DSA26	156
DSA26B	156
DSA26C	156
DSA26E	156
DSA150	177
DSB15B	156
DSB15C	125
DSB15E	156
DSBN-1	116
DSC30B	156
DSC30C	156
DSC30E	156
DSC30G	156
DSD84	1545
DSF10C	552
DSF10TB-BT-A	116
DSG10G	116
DSG10J	125
DSG10L	125
DSI-104-2	519
DSL10B	116
DSL10C	116
DSL10E	116
DSM1A1	587
DSS953	177
DSS16685	109
DSZ3060	5091A
DT18(CHAN.MASTER)	116
DT32N400CO	5712
DT32N400KOC	5712
DT32N600CO	5712
DT32N600KOC	5712
DT32N800CO	5712
DT32N800KOC	5712
DT32N1100CO	5712
DT32N1100KOC	5712
DT32N1200CO	5712
DT32N1200KOC	5712
DT41	121
DT45N400CO	5712
DT45N400KOC	5712
DT45N600CO	5712
DT45N600KOC	5712
DT45N800CO	5712
DT45N800KOC	5712
DT45N1100CO	5712
DT45N1100KOC	5712
DT45N1200CO	5712
DT45N1200KOC	5712
DT60N400CO	5712
DT60N400KOC	5712
DT60N600CO	5712
DT60N600KOC	5712
DT60N800CO	5712
DT60N800KOC	5712
DT60N1100CO	5712
DT60N1100KOC	5712
DT60N1200CO	5712
DT60N1200KOC	5712
DT75N400CO	5722
DT75N400KOC	5722
DT75N600CO	5722
DT75N600KOC	5722
DT75N800CO	5722
DT75N800KOC	5722
DT75N1100CO	5722
DT75N1100KOC	5722
DT75N1200CO	5722
DT75N1200KOC	5722
DT80	105
DT95N400CO	5722
DT95N600CO	5722
DT95N800CO	5722
DT95N1100CO	5722
DT95N1100KOC	5722
DT95N1200CO	5722
DT95N1200KOC	5722
DT100	105
DT161	123AP
DT230A	177
DT230B	506
DT230F	177
DT230G	177
DT401	104
DT1003	154
DT1040	121
DT1110	128
DT1111	128
DT1112	128
DT1120	128
DT1121	128
DT1122	128
DT1311	128
DT1321	128
DT1510	128
DT1511	128
DT1512	128
DT1520	128
DT1521	128
DT1522	128
DT1602	154
DT1603	154
DT1610	123
DT1612	154
DT1613	154
DT1621	128
DT3301	175
DT3302	175
DT4011	130
DT4110	130
DT4111	130
DT4120	130
DT4121	130
DT4303	162
DT4304	162
DT4305	162
DT4306	162
DT6110	121
DTA2B	5629
DTA2C	5629
DTA2E	5629
DTA3C	5629
DTA3E	5629
DTA10E	5635
DTA12C	56004
DTA12E	56006
DTA12F	56008
DTA12G	56008
DTA16C	56004
DTA16E	56006
DTA16F	56008
DTA16G	56008
DTA114	2356
DTA114A	2356
DTA114EA	2356
DTA114EK	2415
DTA114ES	2356
DTA124	2358
DTA124A	2358
DTA124EA	2358
DTA124ES	2358
DTA124F	2358
DTA124N	2358
DTA144	2360
DTA144A	2360
DTA144E	2360
DTA144EK	2419
DTA144ES	2360
DTA144TS	2360
DTA144TSTP	2360
DTA1011	121
DTB16C	5679
DTB16F	5679
DTB16G	5679
DTC16C	5679
DTC16E	5679
DTC16F	5679
DTC16G	5679
DTC114	2355
DTC114A	2355
DTC114E	2355
DTC114E-S-T	2355
DTC114EA	2355
DTC114EF	2355
DTC114EK	2414
DTC114ES	2355
DTC114ES-T	2355
DTC114ESN	2355
DTC114ESZ	2355
DTC124	2357
DTC124A	2357
DTC124EA	2357
DTC124EKTP	2408
DTC124ES	2357
DTC124EST	2357
DTC124ESZ	2357
DTC124F	2357
DTC124N	2357
DTC124S	2357
DTC144	2359
DTC144A	2359
DTC144E	2359
DTC144EA	2359
DTC144EK	2418
DTC144ES	2359
DTC144ES-TP	2359
DTC144ESD	2359
DTC144ESTP	2359
DTC144ESZ	2359
DTC144F	2359
DTG110	121
DTG110(SEARS)	121

PART NUMBER	NTE REPLACEMENT
DTG110(WARDS)	104
DTG110A	179
DTG110B	179
DTG400M	179
DTG600	179
DTG601	179
DTG602	179
DTG603	179
DTG603M	179
DTG1010	127
DTG1011	121
DTG1040	121
DTG1110	127
DTG1200	179
DTG2000	179
DTG2000A	179
DTG2000H	179
DTG2100	179
DTG2100A	179
DTG2200	179
DTG-110	104
DTG-1010	127
DTM6C-N	5620
DTM6E-N	5620
DTM6G-N	5620
DTM8C-N	5620
DTM8E-N	5620
DTM8G-N	5620
DTM12C-N	5671
DTM12E-N	5671
DTM12G-N	5671
DTML9093	9093
DTML9099	9099
DTML9930	9930
DTML9932	9932
DTML9933	9933
DTML9935	9935
DTML9936	9936
DTML9944	9944
DTML9945	9945
DTML9946	9946
DTML9948	9948
DTML9949	9949
DTML9961	9961
DTML9962	9962
DTML9963	9963
DTN206	128
DTS0710	162
DTS013	164
DTS0713	164
DTS103	162
DTS104	162
DTS401	162
DTS402	163A
DTS403	283
DTS409	283
DTS410	162
DTS411	94
DTS413	162
DTS423	162
DTS423M	53
DTS424	163A
DTS425	163A
DTS430	52
DTS431	162
DTS431M	162
DTS701	164
DTS702	165
DTS704	165
DTS801	164
DTS802	165
DTS804	165
DTS3705	162
DTS3705A	162
DTS3705B	162
DTS-0710	162
DTS-0713	164
DTS-103	284
DTS-104	284
DTS-105	284
DTS-106	284
DTS-107	284
DTS-401	162
DTS-402	162
DTS-413	162
DTS-704	164
DU1	160
DU2	160
DU3	102A
DU4	158
DU5	102A
DU6	104
DU7	105
DU12	160
DU47	105
DU400	116
DU600	116
DU800	125
DU1000	125
DV13E	5920
DV14C	5916
DV14E	5920
DV2209	614
DVV004	614
DW6034/M	123AP
DW6195	128
DW 7655	234
DW-6505	123AP
DW-6982	128
DW-7375	123AP
DW-7655	234
DW-7655-LV00223	234
DWW-LN514RA	3068
DX0200CE	5332
DX0007	116
DX0080	177
DX006	552
DX0022	519
DX0038CE	552
DX0045GE	519
DX0079	177
DX0085TA	552
DX0086CE	552
DX0086TA	552
DX0086TAZZ	552
DX0101CE	552
DX0105T	552
DX0105TA	552
DX0110CE	116
DX0130CE	552
DX0202CE	552
DX0204CE	519
DX0206	116
DX0208CE	5332
DX0220CE	116
DX0301	611
DX0302	612
DX0403	5021A
DX0501	5013A
DX0115CE	116
DX0123CE	552
DX0125CE	552
DX0126	610
DX0126CE	552
DX0131CE	552
DX0132CE	552
DX0132CEZZ	552
DX0135TA	552
DX0142CE	519
DX0152CE	5314
DX0153CE	552
DX0154CE	116
DX0155CE	116
DX0162	109
DX0177TAJ	552
DX0181CE	580
DX0226CE	552
DX0229CE	506
DX0236CE	519
DX0237CE	519
DX0247CE	580
DX0248CE	552
DX0253	109
DX0585	116
DX520	116
DX1007	614
DX1018	108
DX1039	116
DX1170	137A
DX1193	135A
DX1194	137A
DX1196	611
DX1315	5315
DX1692	167
DX1753	5014A
DX2321	156
DX2322	109
DX2323	5007A
DX2327	519
DX6873	109
DX7429	519
DX-0007	116
DX-0080	177
DX-0022	519
DX-0079	177
DX-0081	177
DX-0087	139A
DX-0099	116
DX-0150	519
DX-0270	519
DX-0301	611
DX-0307	612
DX-0403	5021A
DX-0405	5022A
DX-0408	5013A
DX-0530	137A
DX-0650	600
DX-0750	601
DX-081	5072A
DX-0126	610
DX-0156	109
DX-0159	5011A
DX-0161	109
DX-0162	109
DX-0164	5002A
DX-0235	5080A
DX-0241	109
DX-0253	109
DX-0255	177
DX-0259	519
DX-0273	519
DX-0299	519
DX-0312	601
DX-0398	5010A
DX-0445	116
DX-0475	116
DX-0517	605A
DX-0529	134A
DX-0537	5022A
DX-0543	177
DX-0576	109
DX-0587	552
DX-0697	605A
DX-0713	5023A
DX-0721	116
DX-0723	610
DX-0725	109
DX-0726	5312
DX-0727	136A
DX-0728	139A
DX-0729	5072A
DX-0735	5011A
DX-0749	612
DX-0752	601
DX-0862	5020A
DX-0872	601
DX-0987	135A
DX-0999	5009A
DX-1034	140A
DX-1039	125
DX-1044	5015A
DX-1080	614
DX-1088	519
DX-1131	116
DX-1132	136A
DX-1154	5022A
DX-1161	552
DX-1162	5332
DX-1163	142A
DX-1165	5457
DX-1195	147A
DX-1222	5014A
DX-1226	605A
DX-1228	5008A
DX-1229	156
DX-1258	5005A
DX-1263	5313
DX-1346	5018A
DX-1430	552
DX-1535	5024A
DX-1662	125
DX-1663	5019A
DX-1753	5014A
DX-1772	5006A
DX-1773	552
DX-1802	552
DX-1829	5016A
DX-1834	5018A
DX-1912	552
DX-1991	5019A
DX-1993	5010A
DX-2060	5071A
DX-2061	5072A
DX-2149	5011A
DX-2150	5020A
DX-2230	519
DX-2231	5010A
DX-2232	116
DX-2253	5013A
DX-2257	580
DX-2272	519
DX-2273	552
DX-2274	552
DX-2275	552
DX-2276	116
DX-2277	552
DX-2280	5047A
DX-2281	5457
DX-2306	5021A
DX-2443	116
DX-2446	580
DX-2447	519
DX-2517	5019T1
DX-2555	5016A
DX-2556	552
DX-2617	552
DX-3975	106
DY1SS131	519
DY1SS133	177
DYDAN201VA	519
DYDAP201VA	519
DYMTZ5.1-B	5010A
DYMTZ5.1-C	5010A
DYMTZ6.2-C	5013A
DYMTZ7.5-C	5015A
DYMTZ7.5C	5015A
DYMTZ8.2-C	5016A
DYMTZ9.1-C	5018A
DYMTZ10-C	5019A
DYMTZ20-D	5029A
DYMTZ24-C	5031A
DZ0820	5072A
DZ10	139A
DZ10A	140A
DZ12	143A
DZ12A	142A
DZ13	143A
DZ15A	145A
DZ27A	146A
DZ33A	147A
DZ82A	150A
DZ86.8C	5071A
DZ-081	5072A
DZ-12	142A
DZB6.2	137A
DZB6.8	5071A
DZB6.8C	5071A
DZB7.5	138A
DZB7.5C	138A
DZB8.2	5072A
DZB8.2C	5072A
DZB9.1	139A
DZB9.1C	139A
DZB10	140A
DZB10C	140A
DZB11	5074A
DZB11C	5074A
DZB12C	142A
DZB15	145A
DZB15C	145A
DZB16	5075A
DZB16C	5075A
DZB18	5077A
DZB18C	5077A
DZB20	5079A
DZB20C	5079A
DZB22	5080A
DZB22C	5080A
DZB24	5081A
DZB24C	5081A
DZB27	146A
DZB27C	146A
DZB30	5084A
DZB30C	5084A
E03090-002	167
E0011	614
E0018	109
E070	160
E0105	102
E0704-W	116
E09-306112	177
E044A	102
E066	102
E067	102
E068	102
E075L	116
E0771-3	139A
E0771-6	144A
E0771-7	142A
E0788-C	116
E0788C	116
E03155-001	116
E03155-002	116
E1	116
E1A	107
E1M3	125
E1N3	125
E2	116
E3	116
E4	158
E4A3	5892
E4A3R	5893
E4B3R	5895
E4C3	5896
E4C3R	5897
E4D3	5898
E4D3R	5899
E4E3	5898
E4E3R	5899
E4F3	5900
E4F3R	5901
E4G3	5900
E4G3R	5901
E4H3	5902
E4H3R	5903
E4K3	5904
E4K3R	5905
E4M3	5908
E4M3R	5909
E4N3	5908
E4N3R	5909
E4P3	5910
E4P3R	5911
E5	116
E6	116
E7A3	5912
E7A3R	5913
E7B3	5914
E7B3R	5915
E7C3	5916
E7C3R	5917
E7D3	5918
E7D3R	5919
E7E3	5918
E7E3R	5919
E7F3	5920
E7F3R	5921
E7G3	5920
E7G3R	5921
E7H3	5922
E7H3R	5923
E7K3	5924
E7K3R	5925
E7M3	5928
E7M3R	5929
E7N3	5928
E7N3R	5929
E7P3	5932
E7P3R	5923
E8	125
E9	125
E10	125
E13-000-03	123AP
E13-000-04	123AP
E13-001-02	159
E13-001-03	159
E13-001-04	159
E13-002-03	123AP
E13-003-00	123AP
E13-003-01	123AP
E13-004-00	233
E13-005-02	123AP
E13-006-02	159
E13-007-00	171
E13-008-00	162
E13-009-00	165
E13-010-00	191
E13-020-00	116
E13-0-1-01	505
E13-011-00	191
E13-012-00	182
E13-013-03	120
E13-013-04	120
E13-017-01	177
E13-021-01	505
E13-021-03	505
E13-20-00	116
E14C350	116
E20C30	109
E21	116
E25C5	116
E30C60	109
E41	116
E43-04	552
E84	140A
E102	126
E102(ELCOM)	116
E103	133
E105	126
E106(ELCOM)	116
E108(ELCOM)	125
E111	466
E112	467
E113	466
E125C200	116
E132	102A
E135	116
E143	116
E146	116
E150L	116
E158	102A
E181	102A
E181A	102A
E181B	102A
E181C	102A
E181D	102A
E185B121712	157
E202(ELCOM)	156
E210	123AP
E211	159
E212	123AP
E213	159
E214B	102
E241	102A
E241A	102A
E241B	102A
E262	142A
E295ZZ01	109
E300	312
E300(ELCOM)	5809
E300L	116
E302(ELCOM)	5802
E304(ELCOM)	5804
E306(ELCOM)	5806
E308(ELCOM)	5808
E318-1	128
E500L	116
E629	108
E650L	116
E660	113A
E750(ELCOM)	116
E752(ELCOM)	116
E756(ELCOM)	116
E758(ELCOM)	125
E760(ELCOM)	125
E842	108
E843	108
E844	108
E1010	116
E1011	116
E1018N	116
E1031RT	109
E1031RXT	109
E1042	167
E1121R	177
E1124	116
E1138R	177
E1143RD	156
E1145R	506
E1145RED	506
E1145RJH	506
E1146J	116
E1146R	116
E1153RB	116
E1156RD	116
E1157RNA	116
E1158ZA	5070A
E1176	113A
E1176ALC1A	113A
E1176R	178MP
E1216ZG	142A
E1221R	177
E1222Z	5037A
E1229R	519
E1234R	519
E1237RF	116
E1249Z	5037A
E1256R	177
E1266R	525
E1286R	519
E1293Z	5037A
E1294Z	5037A
E1303Z	5012A
E1304R	125
E1314R	552
E1315R	156
E1322Z	5012A
E1324R	519
E1332R	519
E1336R	552
E1338R	552
E1339R	552
E1340R	552
E1410	116
E1411	116
E1412	116
E1412R	552
E1413	116
E1413R	116
E1415	116
E1428R	552
E1440	116
E1442R	116
E1445ZA	142A
E1466Z	5036A
E1490R	552
E1516R	580
E1518R	552
E1533R	552
E1534R	552
E1616R	580
E1645Z	142A
E1650Z	5020A
E1660Z	5010A
E1670Z	5006A
E1672Z	5036A
E1704R	580
E1705R	552
E1717R	125
E1720R	125
E1725RM	552
E1732R	552
E1750Z	5070A
E1756ZC	5018A
E1775R	177
E1779R	552
E1786R	552
E1789R	116
E1791R	552
E1794R	552
E1810ZA	5035A
E1810ZB	5035A
E1821ZA	5014A
E1821ZB	5014A
E1821ZC	5015A
E1821ZD	5015A
E1823Z	5015A
E1823ZA	5015A
E1823ZB	5015A
E1828ZB	5021T1
E1829R	580
E1852	142A
E2412	100
E2427	101
E2428	101
E2429	101
E2430	123AP
E2431	123AP
E2434	108
E2435	108
E2436	123AP
E2438	160
E2439	160
E2440	160
E2441	128
E2444	123AP
E2445	102A
E2447	103A
E2448	102A
E2449	128
E2450	160
E2451	126
E2452	123AP
E2453	102A
E2454	123AP
E2455	123AP
E2459	123AP
E2460	124
E2461	123AP
E2462	160
E2464(NPN)	103A
E2464(PNP)	102A
E2465	102A
E2466	103A
E2467	102A
E2474	160
E2475	160
E2476	102A
E2477	160
E2478	160
E2479	160
E2480	102A
E2481	102A
E2482	102A
E2484	110MP
E2486	137A
E2495	727
E2496	152
E2497	123AP
E2498	129
E2499	123AP
E3006	116
E4002	101
E4676B	116
E7441	116
E9625	229
E10116	116
E10157	116
E10171	116
E10172	116
E12087G	142A
E18102A	5035A
E18102B	5035A
E18232A	5015A
E21135	110MP
E21430	109
E21431	137A
E24100	116
E24101	156
E24103	123AP
E24104	102A
E24105	103A
E24106	102A
E24107	131
E570022-01	175
E.S57X9	506
E-00602-002	5340
E-00602-003	5313
E-00602-006	5322
E-00602-007	5340
E-00710	931
E-00620-0004	955M
E-00620-0007	4050B
E-00620-0030	6810
E-00620-005	4011B
E-00620-0028	6800
E-00620-0029	6821
E-00620-0032	4502B
E-00620-0033	4049
E-00620-0035	9602
E-00620-0037	4515B
E-00620-0047	941M
E-00620-0048	740A
E-00620-0126	992
E-00620-0127	1232
E-00620-0139	74LS04
E-00620-0165	961
E-00620-0172	3047
E-00620-108	4028B
E-00620-125	6802
E-00620-134	40175B
E-00620-168	74LS155
E-00620-169	74LS14
E-070	102A
E-00585-0014	5400
E-00585-0023	159
E-00585-0029	5411
E-00585-0031	123AP
E-00585-0032	288
E-00585-0033	287
E-00585-0034	263
E-00585-0041	396
E-00585-0042	384
E-00585-0043	291
E-00585-0065	5462
E-00587-0014	519
E-00587-0015	116
E-00598-0007	151A
E-00598-0008	5016A
E-00598-0010	5054A
E-00598-0011	5022A
E-00681	916
E-0704W	116
E-00712	428
E-00712-0003	435P22
E-007120001	430
E-044A	102A
E-065	126
E-066	126
E-067	126
E-068	126
E-075L	116
E-01381	128
E-2SC536AG-SP	85
E-2SC536E-NP	85
E-2SC930D-NP	107
E-2SC930E-NP	107
E-2SC1923-0	229
E-2SC1923-0	229
E-2SD734G	85
E-41	116
E-158	102
E-167-228	128
E-185B121712	128
E-1534R	552
E-2462	160
E-2465	102A
E-2466	103A
E-2491B	128
E-DS17	116
E-DS18	116
E-DS135D	116
E-DS442	177
E-DS442-VG1	177
E-DS442VG1	177
E-DS442YG1	177
E-DS442YGI	177
E-GZA5R1Z	5010A
E-HA12413	1557
E-LA4192	1667
E-TA7343P	1657
EA000-13000	4011B
EA000-17200	74LS14
EA000-22600	74LS373
EA000-44600	8255
EA0002	160
EA0007	160
EA0009	102A
EA0090	128
EA001-00600	2128
EA001-02200	8255
EA001-02700	2128
EA001-02703	2128
EA005	116
EA010	116
EA0013	108
EA0015	116
EA0016	116
EA020	116
EA030	116
EA0031	116
EA040	116
EA050	116
EA0053	160
EA060	116
EA080	125
EA0081	128
EA0086	129

PART NUMBER	NTE REPLACEMENT
EA0087	129
EA0088	106
EA0091	108
EA0092	123AP
EA0093	108
EA0094	108
EA0095	108
EA0X12(NPN)	152
EA0X12(PNP)	153
EA1-380	184
EA1SY11	160
EA15X1	123AP
EA15X2	102A
EA15X3	102A
EA15X4	102A
EA15X5	160
EA15X6	105
EA15X7	102A
EA15X8	102A
EA15X9	123AP
EA15X10	121
EA15X11	160
EA15X11CL	160
EA15X12	121
EA15X13	160
EA15X14	116
EA15X15	121
EA15X15CL	121
EA15X18	123AP
EA15X18CL	289
EA15X19	102A
EA15X19CL	102A
EA15X19P	102A
EA15X20	123AP
EA15X22	123AP
EA15X23	102A
EA15X24	123AP
EA15X25	102A
EA15X26	121
EA15X27	160
EA15X28	102A
EA15X29	160
EA15X30	160
EA15X31	123AP
EA15X33	121
EA15X35	121
EA15X36	102A
EA15X37	123AP
EA15X38	121
EA15X40	160
EA15X41	160
EA15X43	160
EA15X44	123AP
EA15X44P	108
EA15X45	123AP
EA15X45CL	108
EA15X45P	108
EA15X46	108
EA15X49	108
EA15X50	108
EA15X51	108
EA15X52	123AP
EA15X53	121
EA15X54	108
EA15X55	108
EA15X55P	108
EA15X56	123AP
EA15X56CL	152
EA15X57	128
EA15X58	123AP
EA15X59	123AP
EA15X60	123AP
EA15X63	123AP
EA15X63CL	289
EA15X66	160
EA15X67	102A
EA15X67CL	102A
EA15X68	123AP
EA15X69	106
EA15X70	106
EA15X71	106
EA15X72	123AP
EA15X73	123AP
EA15X75	123AP
EA15X75CL	289
EA15X76	123AP
EA15X76CL	289
EA15X77	123AP
EA15X77CL	289
EA15X83	123AP
EA15X84	123AP
EA15X84CL	289
EA15X85	123AP
EA15X85CL	289
EA15X86	123AP
EA15X88	121
EA15X89	123AP
EA15X90	123AP
EA15X91	123AP
EA15X94	108
EA15X94CL	108
EA15X94P	108
EA15X96	123AP
EA15X98	123AP
EA15X99	152
EA15X100	130
EA15X101	123AP
EA15X102	128
EA15X103	123AP
EA15X103CL	289
EA15X111	123AP
EA15X112	123AP
EA15X113	108
EA15X121	175
EA15X121CL	175
EA15X122	519
EA15X123	181
EA15X124	180
EA15X126	5069A
EA15X130	229
EA15X130A	108
EA15X131	108
EA15X131A	108
EA15X132	108
EA15X132L	108
EA15X133	126
EA15X133P	160
EA15X134	107
EA15X134L	108
EA15X135	107
EA15X135L	108
EA15X136	123AP
EA15X137	123AP
EA15X139	131
EA15X140	126
EA15X141	126
EA15X142	123AP
EA15X143	123AP
EA15X144	128
EA15X152	199
EA15X153	123AP
EA15X154	131
EA15X157	123AP
EA15X160	186
EA15X161	199
EA15X162	123AP
EA15X163	123AP
EA15X164	102A
EA15X165	132
EA15X167	123AP
EA15X168	123AP
EA15X169	133
EA15X173	121
EA15X180	229
EA15X184	172A
EA15X185	159
EA15X189	123AP
EA15X190	123AP
EA15X192	132
EA15X193	132
EA15X194	129
EA15X203	102A
EA15X207	102A
EA15X212	102A
EA15X213	123AP
EA15X233	159
EA15X237	123AP
EA15X239	123AP
EA15X240	123AP
EA15X241	123AP
EA15X242	193
EA15X243	185
EA15X244	184
EA15X245	199
EA15X246	123AP
EA15X247	172A
EA15X248	186
EA15X249	128
EA15X250	293
EA15X251	199
EA15X256	289
EA15X257	158
EA15X258	199
EA15X259	199
EA15X264	199
EA15X266	172A
EA15X267	289
EA15X268	294
EA15X269	184
EA15X270	185
EA15X272	123AP
EA15X273	193
EA15X274	192
EA15X288	199
EA15X325	199
EA15X326	158
EA15X327	152
EA15X328	153
EA15X329	266
EA15X330	123AP
EA15X331	123AP
EA15X332	265
EA15X333	152
EA15X334	153
EA15X336	319P
EA15X349	192
EA15X350	107
EA15X351	161
EA15X352	199
EA15X353	199
EA15X354	199
EA15X355	123AP
EA15X356	123AP
EA15X360	289
EA15X361	123AP
EA15X362	295
EA15X363	235
EA15X364	123AP
EA15X365	319P
EA15X367	319P
EA15X370	123AP
EA15X371	123AP
EA15X372	295
EA15X373	123AP
EA15X374	85
EA15X376	107
EA15X378	297
EA15X379	123AP
EA15X380	306
EA15X381	235
EA15X383	295
EA15X385	294
EA15X386	199
EA15X393	229
EA15X394	312
EA15X395	290
EA15X396	229
EA15X397	293
EA15X400	312
EA15X401	312
EA15X402	222
EA15X404	85
EA15X405	222
EA15X408	123AP
EA15X412	195A
EA15X413	293
EA15X414	235
EA15X415	108
EA15X437	123AP
EA15X441	85
EA15X446	133
EA15X482	229
EA15X483	229
EA15X484	123AP
EA15X512	123AP
EA15X513	123AP
EA15X514	123AP
EA15X515	123AP
EA15X1014	85
EA15X1133	85
EA15X1422	107
EA15X1423	107
EA15X1424	85
EA15X1425	107
EA15X1427	85
EA15X1710	152
EA15X2015	108
EA15X2024	107
EA15X2025	107
EA15X2522	293
EA15X3118	153
EA15X4064	107
EA15X4152	107
EA15X4335	85
EA15X4531	192
EA15X4532	123AP
EA15X4631	288
EA15X4810	85
EA15X4812	85
EA15X5939	123AP
EA15X6840	102A
EA15X7112	123AP
EA15X7113	123AP
EA15X7115	123AP
EA15X7117	123AP
EA15X7118	123AP
EA15X7119	123AP
EA15X7120	123AP
EA15X7121	152
EA15X7125	107
EA15X7136	108
EA15X7140	107
EA15X7141	108
EA15X7173	319P
EA15X7174	319P
EA15X7175	123AP
EA15X7176	123AP
EA15X7177	108
EA15X7178	319P
EA15X7179	319P
EA15X7215	107
EA15X7228	108
EA15X7231	107
EA15X7232	123AP
EA15X7233	229
EA15X7234	229
EA15X7235	229
EA15X7236	229
EA15X7242	229
EA15X7243	123AP
EA15X7244	229
EA15X7245	199
EA15X7262	123AP
EA15X7263	107
EA15X7264	107
EA15X7514	123AP
EA15X7517	123AP
EA15X7519	192
EA15X7583	199
EA15X7586	123AP
EA15X7587	108
EA15X7588	123AP
EA15X7589	123AP
EA15X7592	294
EA15X7635	123AP
EA15X7638	123AP
EA15X7639	199
EA15X7642	123AP
EA15X7643	123AP
EA15X7722	108
EA15X7732	159
EA15X7737	159
EA15X8118	153
EA15X8119	152
EA15X8122	189
EA15X8124	152
EA15X8126	152
EA15X8130	153
EA15X8442	158
EA15X8443	103A
EA15X8444	102A
EA15X8502	123AP
EA15X8511	123AP
EA15X8515	123AP
EA15X8516	123AP
EA15X8517	293
EA15X8518	123AP
EA15X8519	123AP
EA15X8520	123AP
EA15X8521	297
EA15X8522	298
EA15X8523	123AP
EA15X8524	159
EA15X8525	123AP
EA15X8529	123AP
EA15X8589	108
EA15X8601	229
EA15X8602	152
EA15X8605	185
EA15X8608	108
EA15X8609	108
EA15X8610	108
EA15X8619	123AP
EA15X844811	85
EA16X1	109
EA16X2	116
EA16X4	141A
EA16X5	109
EA16X6	141A
EA16X8	116
EA16X9	109
EA16X11	109
EA16X13	116
EA16X16	141A
EA16X19	614
EA16X20	177
EA16X21	116
EA16X22	109
EA16X27	109
EA16X28	614
EA16X29	142A
EA16X30	116
EA16X31	614
EA16X33	116
EA16X34	116
EA16X35	1003
EA16X38	5080A
EA16X39	177
EA16X48	109
EA16X49	177
EA16X55	116
EA16X60	177
EA16X61	177
EA16X62	139A
EA16X68	177
EA16X69	177
EA16X71	116
EA16X73	177
EA16X74	139A
EA16X75	177
EA16X77	142A
EA16X80	137A
EA16X81	143A
EA16X82	139A
EA16X84	177
EA16X88	138A
EA16X89	5067A
EA16X92	116
EA16X94	519
EA16X95	177
EA16X97	109
EA16X101	177
EA16X106	612
EA16X110	177
EA16X117	613
EA16X118	136A
EA16X122	177
EA16X123	5071A
EA16X124	145A
EA16X125	138A
EA16X126	5069A
EA16X127	614
EA16X134	177
EA16X135	519
EA16X136	135A
EA16X140	109
EA16X144	5009A
EA16X146	177
EA16X149	116
EA16X150	140A
EA16X152	519
EA16X154	5011A
EA16X157	140A
EA16X162	142A
EA16X166	614
EA16X171	177
EA16X177	614
EA16X192	611
EA16X193	607
EA16X241	137A
EA16X402	5073A
EA16X408	5018A
EA16X421	5013A
EA16X424	5019A
EA16X425	177
EA16X426	5016A
EA16X441	110MP
EA16X442	177
EA16X443	5074A
EA16X445	177
EA16X446	177
EA16X447	5011A
EA16X453	601
EA16X454	5019A
EA16X455	5019A
EA16X463	611
EA16X464	125
EA16X476	166
EA16X495	5020A
EA16X496	5014A
EA33X0367	1003
EA33X8351	1027
EA33X8352	1019
EA33X8356	1005
EA33X8363	1180
EA33X8364	799
EA33X8367	1003
EA33X8368	1036
EA33X8371	1124
EA33X8372	1142
EA33X8373	789
EA33X8385	7473
EA33X8388	1167
EA33X8389	1155
EA33X8392	1192
EA33X8394	1192
EA33X8396	1155
EA33X8450	2060
EA33X8465	2061
EA33X8479	941M
EA33X8500	1100
EA33X8501	1249
EA33X8508	1249
EA33X8509	1192
EA33X8511	801
EA33X8537	1624
EA33X8539	1248
EA33X8548	823
EA33X8584	2061
EA33X8605	74LS00
EA33X8700	1512
EA33X8705	1248
EA33X8708	1170
EA50X12(NPN)	152
EA50X12(PNP)	153
EA57X1	116
EA57X3	116
EA57X4	116
EA57X8	116
EA57X10	116
EA57X11	116
EA57X14	116
EA57X17	5304
EA75X1	116
EA100	125
EA1072	116
EA1080	123AP
EA1081	102A
EA1082	121
EA1123	109
EA1128	123AP
EA1129	123AP
EA1135	123AP
EA1145	123AP
EA1318	142A
EA1337	160
EA1338	160
EA1339	160
EA1340	160
EA1341	121
EA1342	160
EA1343	108
EA1344	123AP
EA1345	123AP
EA1346	102A
EA1385	614
EA1405	177
EA1406	123AP
EA1407	123AP
EA1408	123AP
EA1448	116
EA1451	123AP
EA1452	123AP
EA1499	123AP
EA1549	128
EA1562	108
EA1563	108
EA1564	123AP
EA1578	123AP
EA1581	123AP
EA1628	123AP
EA1629	123AP
EA1630	123AP
EA1638	123AP
EA1661	177
EA1672	116
EA1684	128
EA1695	123AP
EA1696	123AP
EA1697	123AP
EA1698	128
EA1700	121
EA1703	123AP
EA1716	123AP
EA1718	123AP
EA1733	108
EA1735	123AP
EA1740	130
EA1778	123AP
EA1793	108
EA1872	123AP
EA1873	128
EA2131	107
EA2132	107
EA2133	126
EA2134	102A
EA2135	102A
EA2136	158
EA2137	110MP
EA2138	614
EA2140	116
EA2176	102A
EA2271	123AP
EA2429	199
EA2488	186
EA2489	123AP
EA2490	123AP
EA2491	126
EA2493	108
EA2494	107
EA2495	108
EA2496	107
EA2497	126
EA2498	126
EA2499	116
EA2500	142A
EA2501	116
EA2502	109
EA2503	614
EA2600	108
EA2601	108
EA2602	108
EA2603	108
EA2604	108
EA2605	108
EA2606	110MP
EA2607	177
EA2608	136A
EA2738	199
EA2739	123AP
EA2740	199
EA2741	116
EA2770	123AP
EA2770(N)	123AP
EA2771	199
EA2812	107
EA3127	109
EA3149	123AP
EA3211	199
EA3278	133
EA3282	1003
EA3406	108
EA3407	172A
EA3447	177
EA3674	186
EA3713	107
EA3714	159
EA3715	153
EA3716	152
EA3717	614
EA3718	109
EA3719	142A
EA3763	199
EA3827	116
EA3866	139A
EA3989	116
EA3990	192
EA4025	199
EA4055	186
EA4085	186
EA4112	123AP
EA5711	116
EA7316A	2060
EA7316B	2060
EA158488	85
EA-15X8517	128
EAA00-02700	288
EAA00-11300	261
EAA00-12800	261
EAA00-13400	85
EAA00-13900	54
EAA00-17400	261
EAA00-17500	85
EAB00-04000	129
EAB00-08900	294
EAB00-08600	262
EAB00-09500	290A
EAB00-09900	25
EAB00-08300	292
EAB00-06600	290A
EAB00-07100	290A
EAB00-06500	262
EAB00-06600	290A
EAB0-09500	290A
EAB3	5894
EAC00-00600	116
EAC00-00400	519
EAC00-05400	116
EAC00-09300	519
EACT0-00400	519
EACT0-00400	519
EACT0-00300	177
EACT0-08100	116
EAD00-08200	5021A
EAD00-08400	5022A
EAD00-09200	5013A
EAD00-1040	5009A
EAD00-10100	5009A
EAD00-10400	5009A
EAD00-15000	5014A
EAD00-15100	145A
EAD00-16700	137A
EAD00-17200	5088A
EAD00-20200	5013A
EAD00-20700	5142A
EAD00-20800	5085A
EAD00-21700	140A
EAD00-25300	146A
EADT0-16700	137A
EADT0-25300	146A
EAE00-12600	5313
EAF00-01600	3042
EAI-380	184
EA001-00600	2128
EAQ00-05000	75452B
EAQ00-02000	7404
EAQ00-07500	7406
EAQ00-07514	7406
EAQ00-1200	74LS04
EAQ00-11100	955M
EAQ00-11300	7437
EAQ00-12100	74LS00
EAQ00-12200	74LS04
EAQ00-12300	74LS08
EAQ00-12400	74LS10
EAQ00-12700	74LS74A
EAQ00-12900	74LS123
EAQ00-12914	74LS123
EAQ00-13000	74LS155
EAQ00-13100	74LS174
EAQ00-15200	7407
EAQ00-17200	74LS14
EAQ00-17600	74LS32
EAQ00-18700	74LS138
EAQ00-19000	74LS365A
EAQ00-19300	74LS374
EAQ00-19400	74LS244
EAQ00-20300	74LS163A
EAQ00-21500	74LS139
EAQ00-22100	74LS245
EAQ00-22600	74LS373
EAQ00-22614	74LS373
EAQ00-22900	74LS155
EAQ00-23600	74LS257
EAQ00-24000	74LS33
EAQ00-24700	74LS156
EAQ00-30000	75188
EAQ00-30200	75189
EAQ00-30300	74LS378
EAQ01-18	5027A
EAQ02-05E	5010A
EAS00	967
EAS00-00700	960
EAS00-09000	941M
EAS00-05800	834
EAS00-06100	778A
EAS00-12900	943M
EAW00-00700	312
EB0001	102A
EB0003	102A
EB1(ELCOM)	166
EB2(ELCOM)	168
EB3(ELCOM)	166
EB4(ELCOM)	167
EB6(ELCOM)	168
EB7(ELCOM)	169
EB9(ELCOM)	166
EB10(ELCOM)	167
EB11(ELCOM)	168
EB12(ELCOM)	169
EB13(ELCOM)	170
EB16X52	145A
EB-134144	194
EC100	125
EC103A	5402
EC103B	5404
EC103C	5405
EC103D	5405
EC103E	5406
EC103M	5406
EC103Y	5400
EC392B	5594
EC393B	5594
EC394B	5594
EC395B	5594
EC401	116
EC402	116
EC961	130
ECC295	5645
ECC-01262	9932
ECC-01263	9945
ECC-01264	9946
ECC-01265	9962
ECC-01266	9951
ECC-01267	9930
ECG1V010	1V010
ECG1V020	1V020
ECG1V030	1V030
ECG1V040	1V040
ECG1V050	1V050
ECG1V014	1V014
ECG1V015	1V015
ECG1V017	1V017
ECG1V025	1V025
ECG1V035	1V035
ECG1V075	1V075
ECG1V095	1V095
ECG1V115	1V115
ECG1V130	1V130
ECG1V150	1V150
ECG1V250	1V250
ECG1V275	1V275
ECG1V300	1V300
ECG2V010	2V010
ECG2V020	2V020
ECG2V030	2V030
ECG2V040	2V040
ECG2V050	2V050
ECG2V060	2V060
ECG2V014	2V014
ECG2V015	2V015
ECG2V017	2V017
ECG2V025	2V025
ECG2V035	2V035
ECG2V075	2V075
ECG2V095	2V095
ECG2V115	2V115
ECG2V130	2V130

PART NUMBER	NTE REPLACEMENT
ECG2V150	2V150
ECG2V250	2V250
ECG2V275	2V275
ECG2V300	2V300
ECG2V420	2V420
ECG2V480	2V480
ECG11	11
ECG13	13
ECG14	14
ECG15	15
ECG16	16
ECG17	17
ECG18	18
ECG19	19
ECG20	20
ECG21	21
ECG22	22
ECG23	23
ECG25	25
ECG26	26
ECG27	27
ECG28	28
ECG29	29
ECG30	30
ECG31	31
ECG32	32
ECG33	33
ECG34	34
ECG36	36
ECG36MP	36MP
ECG37	37
ECG37MCP	37MCP
ECG38	38
ECG39	39
ECG40	40
ECG41	41
ECG42	42
ECG43	43
ECG44	44
ECG45	45
ECG46	46
ECG47	47
ECG48	48
ECG49	49
ECG50	50
ECG51	51
ECG52	52
ECG53	53
ECG54	54
ECG54MP	54MP
ECG55	55
ECG55MCP	55MCP
ECG56	56
ECG57	57
ECG58	58
ECG59	59
ECG60	60
ECG60MP	60MP
ECG61	61
ECG61MCP	61MCP
ECG61MP	61MP
ECG62	62
ECG63	63
ECG64	64
ECG65	65
ECG66	66
ECG67	67
ECG68	68
ECG69	69
ECG70	70
ECG71	71
ECG72	72
ECG73	73
ECG74C00	74C00
ECG74C02	74C02
ECG74C04	74C04
ECG74C08	74C08
ECG74C10	74C10
ECG74C14	74C14
ECG74C20	74C20
ECG74C30	74C30
ECG74C32	74C32
ECG74C42	74C42
ECG74C48	74C48
ECG74C73	74C73
ECG74C74	74C74
ECG74C76	74C76
ECG74C85	74C85
ECG74C90	74C90
ECG74C93	74C93
ECG74C95	74C95
ECG74C107	74C107
ECG74C151	74C151
ECG74C154	74C154
ECG74C157	74C157
ECG74C161	74C161
ECG74C164	74C164
ECG74C173	74C173
ECG74C174	74C174
ECG74C175	74C175
ECG74C192	74C192
ECG74C193	74C193
ECG74C221	74C221
ECG74C240	74C240
ECG74C244	74C244
ECG74C373	74C373
ECG74C374	74C374
ECG74C901	74C901
ECG74C901N	74C901
ECG74C902	74C902
ECG74C903	74C903
ECG74C904	74C904
ECG74C922	74C922
ECG74C923	74C923

PART NUMBER	NTE REPLACEMENT
ECG74C925	74C925
ECG74H00	74H00
ECG74H01	74H01
ECG74H04	74H04
ECG74H05	74H05
ECG74H08	74H08
ECG74H10	74H10
ECG74H11	74H11
ECG74H20	74H20
ECG74H21	74H21
ECG74H22	74H22
ECG74H30	74H30
ECG74H40	74H40
ECG74H50	74H50
ECG74H51	74H51
ECG74H52	74H52
ECG74H53	74H53
ECG74H54	74H54
ECG74H55	74H55
ECG74H60	74H60
ECG74H61	74H61
ECG74H62	74H62
ECG74H71	74H71
ECG74H72	74H72
ECG74H73	74H73
ECG74H74	74H74
ECG74H76	74H76
ECG74H78	74H78
ECG74H87	74H87
ECG74H101	74H101
ECG74H102	74H102
ECG74H103	74H103
ECG74H108	74H108
ECG74H183	74H183
ECG74L93	74L93
ECG74LS00	74LS00
ECG74LS02	74LS02
ECG74LS03	74LS03
ECG74LS04	74LS04
ECG74LS05	74LS05
ECG74LS08	74LS08
ECG74LS09	74LS09
ECG74LS11	74LS11
ECG74LS14	74LS14
ECG74LS15	74LS15
ECG74LS20	74LS20
ECG74LS21	74LS21
ECG74LS22	74LS22
ECG74LS26	74LS26
ECG74LS27	74LS27
ECG74LS28	74LS28
ECG74LS30	74LS30
ECG74LS32	74LS32
ECG74LS33	74LS33
ECG74LS37	74LS37
ECG74LS38	74LS38
ECG74LS40	74LS40
ECG74LS42	74LS42
ECG74LS47	74LS47
ECG74LS48	74LS48
ECG74LS49	74LS49
ECG74LS51	74LS51
ECG74LS54	74LS54
ECG74LS55	74LS55
ECG74LS73	74LS73
ECG74LS74A	74LS74A
ECG74LS75	74LS75
ECG74LS78	74LS78
ECG74LS83A	74LS83A
ECG74LS85	74LS85
ECG74LS86	74LS86
ECG74LS90	74LS90
ECG74LS91	74LS91
ECG74LS92	74LS92
ECG74LS93	74LS93
ECG74LS95B	74LS95B
ECG74LS107	74LS107
ECG74LS109A	74LS109A
ECG74LS112A	74LS112A
ECG74LS113	74LS113
ECG74LS114	74LS114
ECG74LS123	74LS123
ECG74LS125A	74LS125A
ECG74LS126	74LS126A
ECG74LS126A	74LS126A
ECG74LS132	74LS132
ECG74LS133	74LS133
ECG74LS136	74LS136
ECG74LS138	74LS138
ECG74LS148	74LS148
ECG74LS151	74LS151
ECG74LS153	74LS153
ECG74LS155	74LS155
ECG74LS156	74LS156
ECG74LS157	74LS157
ECG74LS158	74LS158
ECG74LS160A	74LS160A
ECG74LS161A	74LS161A
ECG74LS162A	74LS162A
ECG74LS163A	74LS163A
ECG74LS164	74LS164
ECG74LS165	74LS165
ECG74LS166	74LS166
ECG74LS168A	74LS168A
ECG74LS169A	74LS169A
ECG74LS170	74LS170
ECG74LS173	74LS173A
ECG74LS173A	74LS173A
ECG74LS174	74LS174
ECG74LS175	74LS175
ECG74LS181	74LS181
ECG74LS190	74LS190
ECG74LS191	74LS191
ECG74LS192	74LS192

PART NUMBER	NTE REPLACEMENT
ECG74LS193	74LS193
ECG74LS194A	74LS194A
ECG74LS195A	74LS195A
ECG74LS196	74LS196
ECG74LS197	74LS197
ECG74LS221	74LS221
ECG74LS240	74LS240
ECG74LS241	74LS241
ECG74LS242	74LS242
ECG74LS243	74LS243
ECG74LS244	74LS244
ECG74LS247	74LS247
ECG74LS248	74LS248
ECG74LS249	74LS249
ECG74LS251	74LS251
ECG74LS253	74LS253
ECG74LS257	74LS257
ECG74LS258	74LS258
ECG74LS259	74LS259
ECG74LS260	74LS260
ECG74LS266	74LS266
ECG74LS273	74LS273
ECG74LS279	74LS279
ECG74LS280	74LS280
ECG74LS283	74LS283
ECG74LS290	74LS290
ECG74LS293	74LS293
ECG74LS295A	74LS295A
ECG74LS298	74LS298
ECG74LS348	74LS348
ECG74LS353	74LS353
ECG74LS363	74LS363
ECG74LS364	74LS364
ECG74LS365A	74LS365A
ECG74LS367	74LS367
ECG74LS368	74LS368
ECG74LS373	74LS373
ECG74LS374	74LS374
ECG74LS377	74LS377
ECG74LS378	74LS378
ECG74LS379	74LS379
ECG74LS390	74LS390
ECG74LS393	74LS393
ECG74LS395A	74LS395A
ECG74LS398	74LS398
ECG74LS399	74LS399
ECG74LS490	74LS490
ECG74LS540	74LS540
ECG74LS541	74LS541
ECG74LS624	74LS624
ECG74LS625	74LS625
ECG74LS626	74LS626
ECG74LS627	74LS627
ECG74LS629	74LS629
ECG74LS640	74LS640
ECG74LS641	74LS641
ECG74LS642	74LS642
ECG74LS643	74LS643
ECG74LS645	74LS645
ECG74LS670	74LS670
ECG74S00	74S00
ECG74S02	74S02
ECG74S03	74S03
ECG74S04	74S04
ECG74S05	74S05
ECG74S08	74S08
ECG74S09	74S09
ECG74S10	74S10
ECG74S11	74S11
ECG74S15	74S15
ECG74S20	74S20
ECG74S22	74S22
ECG74S30	74S30
ECG74S40	74S40
ECG74S51	74S51
ECG74S64	74S64
ECG74S65	74S65
ECG74S74	74S74
ECG74S86	74S86
ECG74S112	74S112
ECG74S113	74S113
ECG74S114	74S114
ECG74S124	74S124
ECG74S133	74S133
ECG74S134	74S134
ECG74S138	74S138
ECG74S140	74S140
ECG74S151	74S151
ECG74S153	74S153
ECG74S157	74S157
ECG74S158	74S158
ECG74S174	74S174
ECG74S175	74S175
ECG74S181	74S181
ECG74S188	74S188
ECG74S194	74S194
ECG74S251	74S251
ECG74S258	74S258
ECG74S287	74S287
ECG74S288	74S288
ECG74S387	74S387
ECG74S472	74S472
ECG74S474	74S474
ECG74S475	74S475
ECG74S570	74S570
ECG74S571	74S571
ECG74S572	74S572
ECG74S573	74S573
ECG75	75
ECG76	76
ECG76MP	76MP
ECG77	77
ECG78	78
ECG79	79

PART NUMBER	NTE REPLACEMENT
ECG80C95	80C95
ECG80C96	80C96
ECG80C97	80C97
ECG84	82
ECG85	85
ECG87	87
ECG88	88
ECG88MCP	88MCP
ECG89	89
ECG90	90
ECG91	91
ECG92	92
ECG93	93
ECG93L08	93L08
ECG93L16	93L16
ECG93MCP	93MCP
ECG94	94
ECG96	96
ECG96L02	96L02
ECG97	97
ECG98	98
ECG99	99
ECG100	100
ECG101	101
ECG102	102
ECG102A	102A
ECG103	103
ECG103A	103A
ECG104	104
ECG104MP	104MP
ECG105	105
ECG106	106
ECG107	107
ECG108	108
ECG108-1	108-1
ECG109	109
ECG110	110MP
ECG111	112
ECG112	112
ECG113	113A
ECG113A	113A
ECG115	115
ECG116	116
ECG117	117
ECG118	118
ECG120	120
ECG121	121
ECG121MP	121MP
ECG123	123
ECG123A	123A
ECG123AP	123AP
ECG124	124
ECG125	125
ECG126	126
ECG126A	126A
ECG127	127
ECG128	128
ECG128P	128P
ECG129	129
ECG129MCP	129MCP
ECG129P	129P
ECG130	130
ECG130MP	130MP
ECG131	131
ECG131MP	131MP
ECG132	132
ECG133	133
ECG134	134A
ECG134A	134A
ECG135	135A
ECG135A	135A
ECG136	136A
ECG136A	136A
ECG137	137A
ECG137A	137A
ECG138	138A
ECG138A	138A
ECG139	139A
ECG139A	139A
ECG140	140A
ECG140A	140A
ECG141	141A
ECG141A	141A
ECG142	142A
ECG142A	142A
ECG143	143A
ECG143A	143A
ECG144	144A
ECG144A	144A
ECG145	145A
ECG145A	145A
ECG146	146A
ECG146A	146A
ECG147	147A
ECG147A	147A
ECG148	148A
ECG148A	148A
ECG149	149A
ECG149A	149A
ECG150	150A
ECG150A	150A
ECG151	151A
ECG151A	151A
ECG152	152
ECG153	153
ECG153MCP	153MCP
ECG154	154
ECG155	155
ECG156	156
ECG157	157
ECG158	158
ECG159	159
ECG159MCP	159MCP
ECG160	160

PART NUMBER	NTE REPLACEMENT
ECG161	161
ECG162	162
ECG163	163A
ECG163A	163A
ECG164	164
ECG165	165
ECG166	166
ECG167	167
ECG168	168
ECG169	169
ECG170	170
ECG171	171
ECG172	172A
ECG172A	172A
ECG173	173BP
ECG173A	173BP
ECG173BP	173BP
ECG174	174
ECG175	175
ECG176	176
ECG177	177
ECG178MP	178MP
ECG179	179
ECG179MP	179MP
ECG180	180
ECG180MCP	180MCP
ECG181	181
ECG182	182
ECG183	183
ECG184	184
ECG185	185
ECG185MCP	185MCP
ECG186	186
ECG186A	186A
ECG187	187
ECG187A	187A
ECG188	188
ECG189	189
ECG190	190
ECG191	191
ECG192	192
ECG192-1	192A
ECG192A	192A
ECG193	193
ECG193-1	193A
ECG193A	193A
ECG194	194
ECG195	195A
ECG195A	195A
ECG196	196
ECG197	197
ECG198	198
ECG199	199
ECG209	209
ECG210	210
ECG211	211
ECG213	213
ECG214	214
ECG215	215
ECG217	217
ECG218	218
ECG219	219
ECG221	221
ECG222	222
ECG224	224
ECG225	225
ECG226	226
ECG226MP	226MP
ECG227	227
ECG228	228A
ECG228A	228A
ECG229	229
ECG230	230
ECG231	231
ECG232	232
ECG233	233
ECG234	234
ECG235	235
ECG236	236
ECG237	237
ECG238	238
ECG239	239
ECG240	240
ECG241	241
ECG242	242
ECG243	243
ECG244	244
ECG245	245
ECG246	246
ECG247	247
ECG248	248
ECG249	249
ECG250	250
ECG251	251
ECG252	252
ECG253	253
ECG254	254
ECG255	255
ECG256	256
ECG257	257
ECG259	259
ECG261	261
ECG262	262
ECG263	263
ECG264	264
ECG265	265
ECG266	266
ECG267	267
ECG268	268
ECG269	269
ECG270	270
ECG271	271
ECG272	272
ECG273	273

PART NUMBER	NTE REPLACEMENT
ECG274	274
ECG275	275
ECG276	276
ECG278	278
ECG280	280
ECG280MP	280MP
ECG281	281
ECG281MCP	281MCP
ECG282	282
ECG283	283
ECG284	284
ECG284MP	284MP
ECG285	285
ECG285MCP	285MCP
ECG287	287
ECG288	288
ECG289	289
ECG289A	289A
ECG289MP	289MP
ECG290	290
ECG290A	290A
ECG290AMCP	290AMCP
ECG291	291
ECG292	292
ECG292MCP	292MCP
ECG293	293
ECG293MP	293MP
ECG294	294
ECG295	295
ECG296	296
ECG297	297
ECG297MP	297MP
ECG298	298
ECG299	299
ECG300	300
ECG300MP	300MP
ECG302	302
ECG302F	320F
ECG303	303
ECG306	306
ECG308	308
ECG308P	308P
ECG309K	309K
ECG310	310
ECG310P	310P
ECG311	311
ECG312	312
ECG313	313
ECG314	314
ECG315	315
ECG316	316
ECG317	317
ECG318	318
ECG319	319P
ECG320	320
ECG322	322
ECG323	323
ECG324	324
ECG325	325
ECG326	326
ECG327	327
ECG328	328
ECG329	329
ECG330	330
ECG331	331
ECG332	332
ECG332MCP	332MCP
ECG333	333
ECG334	334
ECG335	335
ECG336	336
ECG337	337
ECG338	338
ECG338F	338F
ECG339	339
ECG340	340
ECG341	341
ECG342	342
ECG343	343
ECG344	344
ECG345	345
ECG346	346
ECG347	347
ECG348	348
ECG349	349
ECG350	350
ECG350F	350F
ECG351	351
ECG352	352
ECG353	353
ECG354	354
ECG355	355
ECG356	356
ECG357	357
ECG358	358
ECG358A	358A
ECG358B	358B
ECG359	359
ECG360	360
ECG361	361
ECG362	362
ECG363	363
ECG364	364
ECG365	365
ECG366	366
ECG367	367
ECG368	368
ECG369	369
ECG373	373
ECG374	374
ECG375	375
ECG376	376
ECG377	377
ECG378	378

PART NUMBER	NTE REPLACEMENT
ECG379	379
ECG382	382
ECG383	383
ECG384	384
ECG385	385
ECG386	386
ECG387	387
ECG388	388
ECG389	389
ECG390	390
ECG391	391
ECG392	392
ECG393	393
ECG394	394
ECG395	395
ECG396	396
ECG397	397
ECG398	398
ECG399	399
ECG400	400
ECG401	401
ECG402	402
ECG403	403
ECG404	404
ECG405	405
ECG406	406
ECG409	409
ECG410	410
ECG412	412
ECG413	413
ECG414	414
ECG415	415
ECG416	416
ECG417	417
ECG418	418
ECG419	419
ECG421	421
ECG422	422
ECG423	423
ECG425A	TP0001
ECG425B	TP0001
ECG425C	TP0001
ECG425D	TP0002
ECG425E	TP0006
ECG425F	TP0004
ECG425G	TP0003
ECG425H	TP0007
ECG425J	TP0009
ECG425K	TP0005
ECG425L	TP0008
ECG430	430
ECG435K28	435K28
ECG435K30	435K30
ECG435K42	435K42
ECG435K64	435K64
ECG435P6	435P6
ECG435P18	435P18
ECG435P20	435P20
ECG435P22	435P22
ECG448B	448B
ECG448E	448E
ECG448G	448G
ECG450A	450A
ECG451	451
ECG452	452
ECG453	453
ECG454	454
ECG455	455
ECG456	456
ECG457	457
ECG459	459
ECG460	460
ECG461	461
ECG462	462
ECG466	466
ECG467	467
ECG470	470
ECG471	471
ECG472	472
ECG473	473
ECG474	474
ECG477	477
ECG478	478
ECG480	480
ECG481	481
ECG482	482
ECG483	483
ECG485	485
ECG486	486
ECG488	488
ECG500	500A
ECG500A	500A
ECG503	503
ECG504	504
ECG505	505
ECG506	506
ECG507	507
ECG508	508
ECG508/R-3A3	508
ECG509	509
ECG509/R-3AT2	509
ECG510	510
ECG510/R-3DB3	510
ECG511	511
ECG511/R-2AV2	511
ECG512	512
ECG512/R-6DW4	512
ECG513	513
ECG514/R-3DS3	514
ECG515	515
ECG518	518
ECG519	519
ECG521	521
ECG522	522

PART NUMBER	NTE REPLACEMENT
ECG523	523
ECG524	524V15
ECG524V13	524V13
ECG524V15	524V15
ECG524V25	524V25
ECG524V27	524V27
ECG524V30	524V30
ECG524V42	524V42
ECG525	525
ECG526	526A
ECG526A	526A
ECG527A	527A
ECG528	528
ECG529	529
ECG530	530
ECG531	531
ECG532	532
ECG533	533
ECG534	534
ECG536A	536A
ECG537	537
ECG538	538
ECG539	539
ECG541	541
ECG542	542
ECG546	546
ECG548	548
ECG549	549
ECG551	551
ECG552	552
ECG553	553
ECG555	555
ECG556	556
ECG557	557
ECG558	558
ECG559	559
ECG568	568
ECG569	565
ECG576	576
ECG577	577
ECG578	578
ECG579	579
ECG580	580
ECG581	581
ECG583	583
ECG584	584
ECG585	585
ECG586	586
ECG587	587
ECG588	588
ECG590	590
ECG591	591
ECG592	592
ECG593	593
ECG594	594
ECG595	595
ECG596	596
ECG597	597
ECG598	598
ECG599	599
ECG600	600
ECG601	601
ECG605	605A
ECG605A	605A
ECG606	606
ECG607	607
ECG610	610
ECG611	611
ECG612	612
ECG613	613
ECG614	614
ECG615	615
ECG615A	615P
ECG616	616
ECG652	652
ECG659	659
ECG700	700
ECG701	701
ECG702	702
ECG703	703
ECG703A	703
ECG704	704
ECG705A	705A
ECG708	708
ECG709	709
ECG711	711
ECG712	712
ECG713	713
ECG714	714
ECG715	715
ECG721	721
ECG722	722
ECG723	723
ECG724	724
ECG725	725
ECG726	726
ECG727	727
ECG730	730
ECG731	731
ECG734	734
ECG736	736
ECG737	737
ECG738	738
ECG739	739
ECG740	740A
ECG740A	740A
ECG742	742
ECG743	743
ECG744	744
ECG746	746
ECG747	747
ECG748	748
ECG749	749
ECG750	750

PART NUMBER	NTE REPLACEMENT
ECG754	754
ECG760	760
ECG778A	778A
ECG778S	778S
ECG778SM	778SM
ECG780	780
ECG783	783
ECG784	784
ECG787	787
ECG788	788
ECG789	789
ECG791	791
ECG793	793
ECG797	797
ECG799	799
ECG801	801
ECG804	804
ECG806	806
ECG807	807
ECG809	809
ECG812	812
ECG815	815
ECG818	818
ECG821	821
ECG822	822
ECG823	823
ECG824	824
ECG825	825
ECG826	826
ECG828	828
ECG829	829
ECG832	832
ECG832SM	832SM
ECG834	834
ECG834SM	834SM
ECG835	835
ECG836	836
ECG841	841
ECG842	842
ECG843	843
ECG844	844
ECG845	845
ECG846	846
ECG849	849
ECG850	850
ECG851	851
ECG852	852
ECG853	853
ECG855	855
ECG856	856
ECG857M	857M
ECG857SM	857SM
ECG858M	858M
ECG858SM	858SM
ECG859	859
ECG859SM	859SM
ECG860	860
ECG861	861
ECG862	862
ECG863	863
ECG864	864
ECG867	867
ECG868	868
ECG869	869
ECG871	871
ECG873	873
ECG874	874
ECG875	875
ECG876	876
ECG877	877
ECG880	880
ECG887M	887M
ECG888M	888M
ECG889M	889M
ECG902	902
ECG903	903
ECG904	904
ECG905	905
ECG906	906
ECG907	907
ECG908	908
ECG909	909
ECG909D	909D
ECG910	910
ECG910D	910D
ECG911	911
ECG912	912
ECG914	914
ECG915	915
ECG916	916
ECG917	917
ECG918	918
ECG918M	918M
ECG918SM	918SM
ECG919	919
ECG919D	919D
ECG921	921
ECG922	922
ECG922M	922M
ECG922SM	922SM
ECG923	923
ECG923D	923D
ECG924	924
ECG925	925
ECG926	926
ECG927	927
ECG927D	927D
ECG927SM	927SM
ECG928	928
ECG928M	928M
ECG928S	928S
ECG928SM	928SM
ECG929	929
ECG931	931

PART NUMBER	NTE REPLACEMENT
ECG932	932
ECG933	933
ECG934	934
ECG935	935
ECG937	937
ECG938	938
ECG938M	938M
ECG940	940
ECG941	941
ECG941D	941D
ECG941M	941M
ECG941S	941S
ECG941SM	941SM
ECG942	942
ECG943	943
ECG943M	943M
ECG943SM	943SM
ECG944	944
ECG944M	944M
ECG945	945
ECG947	947
ECG947D	947D
ECG948	948
ECG948SM	948SM
ECG949	949
ECG950	950
ECG951	951
ECG952	952
ECG953	953
ECG954	954
ECG955M	955M
ECG955MC	955MC
ECG955S	955S
ECG955SM	955SM
ECG956	956
ECG957	957
ECG958	958
ECG959	959
ECG960	960
ECG961	961
ECG962	962
ECG963	963
ECG964	964
ECG964#	964
ECG965	965
ECG966	966
ECG967	967
ECG968	968
ECG969	969
ECG970	970
ECG971	971
ECG972	972
ECG973	973
ECG973D	973D
ECG974	974
ECG975	975
ECG975SM	975SM
ECG976	976
ECG977	977
ECG978	978
ECG978C	978C
ECG980	980
ECG981	981
ECG982	982
ECG983	983
ECG984	984
ECG985	985
ECG987	987
ECG987SM	987SM
ECG988	988
ECG989	989
ECG990	990
ECG991	991
ECG992	992
ECG993	993
ECG994M	994M
ECG995	995
ECG995M	995M
ECG996	996
ECG997	997
ECG999M	999M
ECG999SM	999SM
ECG1002	1002
ECG1003	1003
ECG1004	1004
ECG1005	1005
ECG1006	1006
ECG1009	1009
ECG1010	1010
ECG1012	1012
ECG1013	1013
ECG1014	1014
ECG1015	1015
ECG1016	1016
ECG1019	1019
ECG1022	1022
ECG1023	1023
ECG1024	1024
ECG1027	1027
ECG1028	1028
ECG1029	1029
ECG1031	1031
ECG1032	1032
ECG1035	1035
ECG1036	1036
ECG1038	1038
ECG1039	1039
ECG1040	1040
ECG1041	1041
ECG1042	1042
ECG1043	1043
ECG1045	1045
ECG1046	1046
ECG1047	1047

PART NUMBER	NTE REPLACEMENT
ECG1049	1049
ECG1050	1050
ECG1052	1052
ECG1053	1053
ECG1054	1054
ECG1055	1055
ECG1056	1056
ECG1057	1057
ECG1058	1058
ECG1060	1060
ECG1061	1061
ECG1062	1062
ECG1064	1064
ECG1072	1072
ECG1073	1073
ECG1075	1075A
ECG1075A	1075A
ECG1079	1079
ECG1080	1080
ECG1081	1081A
ECG1081A	1081A
ECG1082	1082
ECG1083	1083
ECG1085	1085
ECG1087	1087
ECG1089	1089
ECG1090	1090
ECG1091	1091
ECG1092	1092
ECG1093	1093
ECG1094	1094
ECG1096	1096
ECG1097	1097
ECG1098	1098
ECG1099	1099
ECG1100	1100
ECG1101	1101
ECG1102	1102
ECG1103	1103
ECG1104	1104
ECG1106	1106
ECG1107	1107
ECG1108	1108
ECG1110	1110
ECG1112	1112
ECG1115	1115
ECG1115A	1115A
ECG1116	1116
ECG1117	1117
ECG1119	1119
ECG1121	1121
ECG1122	1122
ECG1123	1123
ECG1124	1124
ECG1126	1126
ECG1127	1127
ECG1128	1128
ECG1130	1130
ECG1135	1135
ECG1137	1137
ECG1139	1139
ECG1140	1140
ECG1141	1141
ECG1142	1142
ECG1149	1149
ECG1152	1152
ECG1154	1154
ECG1155	1155
ECG1156	1156
ECG1158	1158
ECG1160	1160
ECG1161	1161
ECG1164	1164
ECG1165	1165
ECG1166	1166
ECG1167	1167
ECG1170	1170
ECG1171	1171
ECG1172	1172
ECG1174	1174
ECG1176	1176
ECG1177	1177
ECG1179	1179
ECG1180	1180
ECG1181	1181
ECG1184	1184
ECG1185	1185
ECG1187	1187
ECG1188	1188
ECG1192	1192
ECG1195	1195
ECG1197	1197
ECG1198	1198
ECG1200	1200
ECG1201	1201
ECG1202	1202
ECG1203	1203
ECG1206	1206
ECG1209	1209
ECG1210	1210
ECG1211	1211
ECG1214	1214
ECG1215	1215
ECG1216	1216
ECG1217	1217
ECG1218	1218
ECG1219	1219
ECG1220	1218
ECG1221	1221
ECG1223	1223
ECG1224	1224
ECG1226	1226
ECG1227	1227
ECG1228	1228

PART NUMBER	NTE REPLACEMENT
ECG1230	1230
ECG1231	1231
ECG1231A	1231A
ECG1232	1232
ECG1233	1233
ECG1234	1234
ECG1235	1235
ECG1236	1236
ECG1237	1237
ECG1240	1240
ECG1241	1241
ECG1242	1242
ECG1243	1243
ECG1245	1245
ECG1248	1248
ECG1249	1249
ECG1250	1250
ECG1254	1254
ECG1257	1257
ECG1262	1262
ECG1263	1263
ECG1264	1264
ECG1265	1265
ECG1266	1266
ECG1267	1267
ECG1268	1268
ECG1269	1269
ECG1271	1271
ECG1273	1273
ECG1281	1281
ECG1282	1282
ECG1285	1285
ECG1289	1289
ECG1290	1290
ECG1292	1292
ECG1293	1293
ECG1294	1294
ECG1295	1295
ECG1296	1296
ECG1297	1297
ECG1298	1298
ECG1299	1299
ECG1300	1300
ECG1301	1301
ECG1303	1303
ECG1304	1304
ECG1306	1306
ECG1308	1308
ECG1309	1309
ECG1311	1311
ECG1312	1312
ECG1314	15010
ECG1315	1315
ECG1316	1316
ECG1317	1317
ECG1320	1320
ECG1323	1323
ECG1326	1326
ECG1327	1327
ECG1328	1328
ECG1329	1329
ECG1330	1330
ECG1331	1331
ECG1333	1333
ECG1335	1335
ECG1337	1337
ECG1338	1338
ECG1339	1339
ECG1340	1340
ECG1343	1343
ECG1344	1344
ECG1345	1345
ECG1346	1346
ECG1347	1347
ECG1356	1356
ECG1358	1358
ECG1359	1359
ECG1361	1361
ECG1362	1362
ECG1363	1363
ECG1365	1365
ECG1367	1367
ECG1368	1368
ECG1369	1369
ECG1370	1370
ECG1371	1371
ECG1372	1372
ECG1373	1373
ECG1374	1374
ECG1375	1375
ECG1376	1376
ECG1377	1377
ECG1378	1378
ECG1380	1380
ECG1381	1381
ECG1382	1382
ECG1383	1383
ECG1387	1387
ECG1388	1388
ECG1389	1389
ECG1390	1390
ECG1391	1391
ECG1392	1392
ECG1393	1393
ECG1394	1394
ECG1395	1395
ECG1396	1396
ECG1398	1398
ECG1399	1399
ECG1400	1400
ECG1401	1401
ECG1402	1402
ECG1403	1403
ECG1404	1404

PART NUMBER	NTE REPLACEMENT
ECG1406	1406
ECG1408	1408
ECG1409	1409
ECG1410	1410
ECG1412	1412
ECG1413	1413
ECG1414	1414
ECG1415	1415
ECG1416	1416
ECG1417	1417
ECG1418	1418
ECG1419	1419
ECG1422	1422
ECG1423	1423
ECG1424	1424
ECG1425	1425
ECG1427	1427
ECG1428	1428
ECG1429	1429
ECG1430	1430
ECG1431	1431
ECG1432	1432
ECG1433	1433
ECG1434	1434
ECG1435	1435
ECG1436	1436
ECG1437	1437
ECG1438	1438
ECG1439	1439
ECG1440	1440
ECG1441	1441
ECG1442	1442
ECG1446	1446
ECG1447	1447
ECG1448	1448
ECG1449	1449
ECG1451	1451
ECG1452	1452
ECG1453	1453
ECG1455	1455
ECG1457	1457
ECG1458	1458
ECG1459	1459
ECG1460	1460
ECG1461	1461
ECG1463	1463
ECG1465	1465
ECG1466	1466
ECG1467	1467
ECG1468	1468
ECG1469	1469
ECG1470	1470
ECG1471	1471
ECG1472	1472
ECG1473	1473
ECG1474	1474
ECG1475	1475
ECG1476	1476
ECG1477	1477
ECG1478	1478
ECG1481	1481
ECG1482	1482
ECG1483	1483
ECG1484	1484
ECG1485	1485
ECG1486	1486
ECG1487	1487
ECG1488	1488
ECG1489	1489
ECG1490	1490
ECG1491	1491
ECG1492	1492
ECG1493	1493
ECG1495	1495
ECG1496	1496
ECG1497	1497
ECG1498	1498
ECG1499	1499
ECG1500	1500
ECG1501	1501
ECG1502	1502
ECG1503	1503
ECG1508	1508
ECG1509	1509
ECG1510	1510
ECG1511	1511
ECG1512	1512
ECG1513	1513
ECG1514	1514
ECG1515	1515
ECG1516	1516
ECG1517	1517
ECG1518	1518
ECG1519	1519
ECG1520	1520
ECG1521	1521
ECG1522	1522
ECG1523	1523
ECG1525	1525
ECG1527	1527
ECG1529	1529
ECG1530	1530
ECG1531	1531
ECG1532	1532
ECG1533	1533
ECG1534	1534
ECG1535	1535
ECG1536	1536
ECG1537	1537
ECG1538	1538
ECG1539	1539
ECG1540	1540
ECG1541	1541
ECG1542	1542

PART NUMBER	NTE REPLACEMENT
ECG1543	1543
ECG1545	1545
ECG1546	1546
ECG1547	1547
ECG1548	1548
ECG1549	1549
ECG1550	1550
ECG1551	1551
ECG1554	1554
ECG1556	1556
ECG1557	1557
ECG1558	1558
ECG1559	1559
ECG1560	1560
ECG1561	1561
ECG1562	1562
ECG1563	1563
ECG1565	1565
ECG1566	1566
ECG1567	1567
ECG1568	1568
ECG1569	1569
ECG1570	1570
ECG1571	1571
ECG1572	1572
ECG1575	1575
ECG1576	1576
ECG1577	1577
ECG1578	1578
ECG1579	1579
ECG1580	1580
ECG1581	1581
ECG1585	1585
ECG1589	1589
ECG1591	1591
ECG1593	1593
ECG1595	1595
ECG1596	1596
ECG1597	1597
ECG1600	1600
ECG1602	1602
ECG1604	1604
ECG1606	1606
ECG1607	1607
ECG1609	1609
ECG1610	1610
ECG1611	1611
ECG1612	1612
ECG1613	1613
ECG1615	1615
ECG1618	1618
ECG1619	1619
ECG1620	1620
ECG1621	1621
ECG1625	1625
ECG1626	1626
ECG1627	1627
ECG1628	1628
ECG1629	1629
ECG1630	1630
ECG1631	1631
ECG1632	1632
ECG1633	1633
ECG1634	1634
ECG1635	1635
ECG1636	1636
ECG1637	1637
ECG1641	1641
ECG1645	1645
ECG1648	1648
ECG1649	1649
ECG1650	1650
ECG1651	1651
ECG1654	1654
ECG1655	1655
ECG1656	1656
ECG1658	1658
ECG1659	1659
ECG1660	1660
ECG1661	1661
ECG1662	1662
ECG1663	1663
ECG1664	1664
ECG1666	1666
ECG1667	1667
ECG1668	1668
ECG1670	1670
ECG1671	1671
ECG1672	1672
ECG1673	1673
ECG1674	1674
ECG1675	1675
ECG1676	1676
ECG1677	1677
ECG1678	1678
ECG1679	1679
ECG1680	1680
ECG1681	1681
ECG1682	1682
ECG1683	1683
ECG1684	1684
ECG1685	1685
ECG1687	1687
ECG1688	1688
ECG1689	1689
ECG1690	1690
ECG1691	1691
ECG1692	1692
ECG1693	1693
ECG1700	1700
ECG1701	1701
ECG1702	1702
ECG1703	1703
ECG1704	1704

PART NUMBER	NTE REPLACEMENT
ECG1707	1707
ECG1708	1708
ECG1709	1709
ECG1710	1710
ECG1711	1711
ECG1712	1712
ECG1713	1713
ECG1714M	1714M
ECG1714S	1714S
ECG1715	1715
ECG1716	1716
ECG1718	1718
ECG1720	1720
ECG1721	1721
ECG1722	1722
ECG1723	1723
ECG1724	1724
ECG1725	1725
ECG1726	1726
ECG1727	1727
ECG1728	1728
ECG1729	1729
ECG1730	1730
ECG1731	1731
ECG1732	1732
ECG1733	1733
ECG1734	1734
ECG1735	1735
ECG1736	1736
ECG1737	1737
ECG1738	1738
ECG1739	1739
ECG1740	1740
ECG1741	1741
ECG1742	1742
ECG1743	1743
ECG1744	1744
ECG1745	1745
ECG1747	1747
ECG1748	1748
ECG1749	1749
ECG1750	1750
ECG1751	1751
ECG1752	1752
ECG1754	1754
ECG1755	1755
ECG1757	1757
ECG1758	1758
ECG1759	1759
ECG1761	1761
ECG1762	1762
ECG1764	1764
ECG1765	1765
ECG1771	1771
ECG1772	1772
ECG1773	1773
ECG1774	1774
ECG1775	1775
ECG1776	1776
ECG1777	1777
ECG1778	1778
ECG1779	1779
ECG1780	1780
ECG1781	1781
ECG1782	1782
ECG1783	1783
ECG1785	1785
ECG1786	1786
ECG1787	1787
ECG1788	1788
ECG1789	1789
ECG1790	1790
ECG1791	1791
ECG1792	1792
ECG1794	1794
ECG1795	1795
ECG1796	1796
ECG1797	1797
ECG1798	1798
ECG1799	1799
ECG1800	1800
ECG1801	1801
ECG1803	1803
ECG1804	1804
ECG1805	1805
ECG1809	1809
ECG1810	1810
ECG1811	1811
ECG1812	1812
ECG1813	1813
ECG1814	1814
ECG1815	1815
ECG1816	1816
ECG1817	1817
ECG1818	1818
ECG1820	1820
ECG1822	1822
ECG1823	1823
ECG1824	1824
ECG1826	1826
ECG1827	1827
ECG1828	1828
ECG1829	1829
ECG1830	1830
ECG1831	1831
ECG1832	1832
ECG1833	1833
ECG1834	1834
ECG1835	1835
ECG1836	1836
ECG1837	1837
ECG1838	1838
ECG1839	1839
ECG1840	1840

PART NUMBER	NTE REPLACEMENT
ECG1842	1842
ECG1843	1843
ECG1844	1844
ECG1845	1845
ECG1846	1846
ECG1847	1847
ECG1848	1848
ECG1849	1849
ECG1851	1851
ECG1854M	1854M
ECG1855	1855
ECG1856	1856
ECG1857	1857
ECG1858	1858
ECG1859	1859
ECG1860	1860
ECG1861	1861
ECG1863	1863
ECG1866	1866
ECG1867	1867
ECG1868	1868
ECG1870	1870
ECG1871	1871
ECG1872	1872
ECG1873	1873
ECG1874	1874
ECG1875	1875
ECG1876	1876
ECG1877	1877
ECG1879	1879
ECG1880	1880
ECG1881	1881
ECG1883	1883
ECG1884	1884
ECG1885	1885
ECG1888	1888
ECG1890	1890
ECG1893	1893
ECG1894	1894
ECG1895	1895
ECG1896	1896
ECG1897	1897
ECG1898	1898
ECG1899	1899
ECG1900	1900
ECG1901	1901
ECG1902	1902
ECG1903	1903
ECG1905	1905
ECG1906	1906
ECG1907	1907
ECG1908	1908
ECG1909	1909
ECG1911	1911
ECG1912	1912
ECG1913	1913
ECG1914	1914
ECG1915	1915
ECG1916	1916
ECG1917	1917
ECG1918	1918
ECG1919	1919
ECG1920	1920
ECG1923	1923
ECG1924	1924
ECG1925	1925
ECG1927	1927
ECG1928	1928
ECG1930	1930
ECG1932	1932
ECG1934	1934
ECG1934X	1934X
ECG1936	1936
ECG1938	1938
ECG1940	1940
ECG1942	1942
ECG2000	2000
ECG2001	2001
ECG2003	2003
ECG2011	2011
ECG2012	2012
ECG2013	2013
ECG2014	2014
ECG2015	2015
ECG2016	2016
ECG2017	2017
ECG2018	2018
ECG2019	2019
ECG2020	2020
ECG2021	2021
ECG2022	2022
ECG2023	2023
ECG2024	2024
ECG2025	2025
ECG2026	2026
ECG2027	2027
ECG2028	2028
ECG2030	2030
ECG2031	2031
ECG2032	2032
ECG2050	2050
ECG2051	2051
ECG2054	2054
ECG2055	2055
ECG2056	2056
ECG2057	2057
ECG2060	2060
ECG2061	2061
ECG2062	2062
ECG2070	2070
ECG2071	2071
ECG2072	2072
ECG2073	2073
ECG2074	2074

PART NUMBER	NTE REPLACEMENT
ECG2075	2075
ECG2076	2076
ECG2077	2077
ECG2078	2078
ECG2079	2079
ECG2080	2080
ECG2081	2081
ECG2082	2082
ECG2083	2083
ECG2084	2084
ECG2086	2086
ECG2088	2088
ECG2102	2102
ECG2102-1	2102
ECG2102-2	2102
ECG2102F	2102
ECG2102FM	2102
ECG2102H	2102
ECG2102HM	2102
ECG2102LF	2102
ECG2102LFM	2102
ECG2102LHM	2102
ECG2104	2104
ECG2107	2107
ECG2117	2117
ECG2128	2128
ECG2164	2164
ECG2300	2300
ECG2301	2301
ECG2302	2302
ECG2303	2303
ECG2304	2304
ECG2305	2305
ECG2306	2306
ECG2308	2308
ECG2309	2309
ECG2310	2310
ECG2311	2311
ECG2312	2312
ECG2313	2313
ECG2314	2314
ECG2315	2315
ECG2316	2316
ECG2317	2317
ECG2318	2318
ECG2319	2319
ECG2320	2320
ECG2322	2322
ECG2323	2323
ECG2324	2324
ECG2325	2325
ECG2327	2327
ECG2328	2328
ECG2329	2329
ECG2330	2330
ECG2331	2331
ECG2332	2332
ECG2334	2334
ECG2335	2335
ECG2336	2336
ECG2337	2337
ECG2338	2338
ECG2340	2340
ECG2344	2344
ECG2349	2349
ECG2350	2350
ECG2351	2351
ECG2352	2352
ECG2355	2355
ECG2356	2356
ECG2357	2357
ECG2358	2358
ECG2359	2359
ECG2360	2360
ECG2361	2361
ECG2362	2362
ECG2380	2380
ECG2381	2381
ECG2382	2382
ECG2383	2383
ECG2384	2384
ECG2385	2385
ECG2386	2386
ECG2387	2387
ECG2388	2388
ECG2392	2392
ECG2401	2401
ECG2402	2402
ECG2403	2403
ECG2404	2404
ECG2405	2405
ECG2408	2408
ECG2409	2409
ECG2412	2412
ECG2413	2413
ECG2414	2414
ECG2415	2415
ECG2416	2416
ECG2417	2417
ECG2418	2418
ECG2419	2419
ECG2426	2426
ECG2427	2427
ECG2428	2428
ECG2429	2429
ECG2430	2430
ECG2431	2431
ECG2532	2532
ECG2708	2708
ECG2716	2716
ECG2732	2732A
ECG2764	2764
ECG2800	2800
ECG3000	3000

PART NUMBER	NTE REPLACEMENT
ECG3001	3001
ECG3002	3002
ECG3003	3003
ECG3004	3004
ECG3007	3007
ECG3008	3008
ECG3009	3009
ECG3010	3010
ECG3011	3011
ECG3012	3012
ECG3013	3013
ECG3014	3014
ECG3015	3015
ECG3016	3016
ECG3018	3018
ECG3019	3019
ECG3020	3020
ECG3021	3021
ECG3022	3022
ECG3023	3023
ECG3024	3024
ECG3025	3025
ECG3027	3027
ECG3028	3028
ECG3029	3029A
ECG3029A	3029A
ECG3030	3030
ECG3031	3031
ECG3032	3032
ECG3033	3033
ECG3034	3034A
ECG3035	3035A
ECG3035A	3035A
ECG3036	3036
ECG3037	3037
ECG3038	3038
ECG3040	3040
ECG3041	3041
ECG3042	3042
ECG3043	3043
ECG3044	3044
ECG3045	3045
ECG3046	3046
ECG3047	3047
ECG3048	3048
ECG3049	3049
ECG3050	3050
ECG3051	3051
ECG3052	3052
ECG3053	3053
ECG3054	3054
ECG3055	3055
ECG3056	3056
ECG3057	3057
ECG3058	3058
ECG3059	3059
ECG3060	3060
ECG3061	3061
ECG3062	3062
ECG3063	3063
ECG3064	3064
ECG3065	3065
ECG3068	3068
ECG3070	3070
ECG3071	3071
ECG3074	3074
ECG3075	3075
ECG3076	3076
ECG3077	3077
ECG3078	3078
ECG3079	3079
ECG3080	3080
ECG3081	3081
ECG3082	3082
ECG3083	3083
ECG3084	3084
ECG3085	3085
ECG3086	3086
ECG3087	3087
ECG3088	3088
ECG3089	3089
ECG3090	3090
ECG3091	3091
ECG3092	3092
ECG3093	3093
ECG3094	3094
ECG3095	3095
ECG3096	3096
ECG3097	3097
ECG3098	3098
ECG3099	3099
ECG3100	3100
ECG3101	3101
ECG3102	3102
ECG3103	3103
ECG3111	3111
ECG3112	3112
ECG3113	3113
ECG3114	3114
ECG3115	3115
ECG3116	3116
ECG3117	3117
ECG3120	3120
ECG3130	3130
ECG3131	3131
ECG3150	3150
ECG3151	3151
ECG3152	3152
ECG3153	3153
ECG3154	3154
ECG3155	3155
ECG3163	3163
ECG3165	3165
ECG3166	3166

PART NUMBER	NTE REPLACEMENT
ECG3167	3167
ECG3168	3168
ECG3169	3169
ECG3170	3170
ECG3171	3171
ECG3180	3180
ECG3181	3181
ECG3182	3182
ECG3470	3470
ECG3880	3880
ECG3881	3881
ECG3882	3882
ECG4000	4000
ECG4001	4001B
ECG4001B	4001B
ECG4002	4002B
ECG4002B	4002B
ECG4006B	4006B
ECG4007B	4007
ECG4008B	4008B
ECG4011	4011B
ECG4011B	4011B
ECG4013	4013B
ECG4013B	4013B
ECG4014	4014B
ECG4014B	4014B
ECG4015	4015B
ECG4015B	4015B
ECG4016	4016B
ECG4016B	4016B
ECG4017	4017B
ECG4017B	4017B
ECG4019	4019B
ECG4019B	4019B
ECG4022B	4022B
ECG4024	4024B
ECG4024B	4024B
ECG4025	4025B
ECG4025B	4025B
ECG4026B	4026B
ECG4027	4027B
ECG4027B	4027B
ECG4028	4028B
ECG4028B	4028B
ECG4029	4029B
ECG4029B	4029B
ECG4030	4030B
ECG4030B	4030B
ECG4031B	4031B
ECG4032B	4032B
ECG4038B	4038B
ECG4040	4040B
ECG4040B	4040B
ECG4041	4041
ECG4042	4042B
ECG4042B	4042B
ECG4043B	4043B
ECG4044B	4044B
ECG4045B	4045B
ECG4046B	4046B
ECG4047B	4047B
ECG4048B	4048B
ECG4049	4049
ECG4050	4050B
ECG4050B	4050B
ECG4051B	4051B
ECG4052	4052B
ECG4052B	4052B
ECG4053B	4053B
ECG4055	4055B
ECG4055B	4055B
ECG4056B	4056B
ECG4060B	4060B
ECG4063B	4063B
ECG4066B	4066B
ECG4067B	4067B
ECG4068	4068B
ECG4068B	4068B
ECG4069	4069
ECG4070B	4070B
ECG4071	4071B
ECG4071B	4071B
ECG4072B	4072B
ECG4073B	4073B
ECG4075B	4075B
ECG4076B	4076B
ECG4077	4077B
ECG4077B	4077B
ECG4078	4078B
ECG4078B	4078B
ECG4081	4081B
ECG4081B	4081B
ECG4082B	4082B
ECG4085	4085B
ECG4085B	4085B
ECG4086	4086B
ECG4086B	4086B
ECG4089B	4089B
ECG4093B	4093B
ECG4094B	4094B
ECG4095B	4095B
ECG4096B	4096B
ECG4097B	4097B
ECG4098B	4098B
ECG4099	4099B
ECG4099B	4099B
ECG4256	4256
ECG4296	4926
ECG4501	4501
ECG4508B	4508B
ECG4510B	4510B
ECG4511B	4511B
ECG4512	4512B
ECG4512B	4512B

PART NUMBER	NTE REPLACEMENT
ECG4513B	4513B
ECG4514B	4514B
ECG4515B	4515B
ECG4516B	4516B
ECG4517B	4517B
ECG4518B	4518B
ECG4520	4520B
ECG4520B	4520B
ECG4521B	4521B
ECG4522	4522B
ECG4522B	4522B
ECG4526B	4526B
ECG4527	4527B
ECG4527B	4527B
ECG4528B	4528B
ECG4529B	4529B
ECG4531B	4531B
ECG4532B	4532B
ECG4538B	4538B
ECG4539	4539B
ECG4539B	4539B
ECG4541B	4541B
ECG4543B	4543B
ECG4547B	4547B
ECG4551B	4551B
ECG4553B	4553B
ECG4555	4555B
ECG4555B	4555B
ECG4556	4556B
ECG4556B	4556B
ECG4558B	4558B
ECG4566B	4566B
ECG4569B	4569B
ECG4583B	4583B
ECG4585B	4585B
ECG4597B	4597B
ECG4598B	4598B
ECG4900	4900
ECG4902	4902
ECG4903	4903
ECG4918	4918
ECG4926	4926
ECG4927	4927
ECG4928	4928
ECG4929	4929
ECG4934	4934
ECG4935	4935
ECG4950	4950
ECG4951	4951
ECG4958	4958
ECG4959	4959
ECG4988	4988
ECG4989	4989
ECG5000	5000A
ECG5000A	5000A
ECG5001	5001A
ECG5001A	5001A
ECG5002	5002A
ECG5002A	5002A
ECG5003	5003A
ECG5003A	5003A
ECG5004	5004A
ECG5004A	5004A
ECG5005	5005A
ECG5005A	5005A
ECG5006	5006A
ECG5006A	5006A
ECG5007	5007A
ECG5007A	5007A
ECG5008	5008A
ECG5009	5009A
ECG5009A	5009A
ECG5010	5010A
ECG5010A	5010A
ECG5011A	5011A
ECG5011T1	5011T1
ECG5012A	5012A
ECG5013	5013A
ECG5013A	5013A
ECG5014A	5014A
ECG5015	5015A
ECG5015A	5015A
ECG5016	5016A
ECG5016A	5016A
ECG5017	5017A
ECG5017A	5017A
ECG5018	5018A
ECG5018A	5018A
ECG5019	5019A
ECG5019A	5019A
ECG5020	5020A
ECG5020A	5020A
ECG5021	5021A
ECG5021A	5021A
ECG5021T1	5021T1
ECG5022	5022A
ECG5022A	5022A
ECG5023	5023A
ECG5023A	5023A
ECG5024	5024A
ECG5024A	5024A
ECG5025	5025A
ECG5025A	5025A
ECG5026	5026A
ECG5026A	5026A
ECG5027	5027A
ECG5027A	5027A
ECG5028A	5028A
ECG5029	5029A
ECG5029A	5029A
ECG5030	5030A
ECG5030A	5030A
ECG5031	5031A
ECG5031A	5031A

PART NUMBER	NTE REPLACEMENT
ECG5032	5032A
ECG5032A	5032A
ECG5033	5033A
ECG5033A	5033A
ECG5034	5034A
ECG5034A	5034A
ECG5035	5035A
ECG5035A	5035A
ECG5036	5036A
ECG5036A	5036A
ECG5037	5037A
ECG5037A	5037A
ECG5038	5038A
ECG5038A	5038A
ECG5039	5039A
ECG5039A	5039A
ECG5040	5040A
ECG5040A	5040A
ECG5041	5041A
ECG5041A	5041A
ECG5042	5042A
ECG5042A	5042A
ECG5043	5043A
ECG5043A	5043A
ECG5044	5044A
ECG5044A	5044A
ECG5045	5045A
ECG5045A	5045A
ECG5046	5046A
ECG5046A	5046A
ECG5047	5047A
ECG5047A	5047A
ECG5048	5048A
ECG5048A	5048A
ECG5049	5049A
ECG5049A	5049A
ECG5050	5050A
ECG5050A	5050A
ECG5051	5051A
ECG5051A	5051A
ECG5052	5052A
ECG5052A	5052A
ECG5053	5053A
ECG5053A	5053A
ECG5054A	5054A
ECG5055	5055A
ECG5055A	5055A
ECG5056	5056A
ECG5056A	5056A
ECG5057	5057A
ECG5057A	5057A
ECG5058	5058A
ECG5058A	5058A
ECG5059	5059A
ECG5059A	5059A
ECG5060	5060A
ECG5060A	5060A
ECG5061	5061A
ECG5061A	5061A
ECG5062	5062A
ECG5062A	5062A
ECG5063	5063A
ECG5063A	5063A
ECG5064	5064A
ECG5064A	5064A
ECG5065	5065A
ECG5065A	5065A
ECG5066	5066A
ECG5066A	5066A
ECG5067	5067A
ECG5067A	5067A
ECG5068	5068A
ECG5068A	5068A
ECG5069	5069A
ECG5069A	5069A
ECG5070	5070A
ECG5070A	5070A
ECG5071	5071A
ECG5071A	5071A
ECG5072	5072A
ECG5072A	5072A
ECG5073	5073A
ECG5073A	5073A
ECG5074	5074A
ECG5074A	5074A
ECG5075	5075A
ECG5075A	5075A
ECG5076	5076A
ECG5076A	5076A
ECG5077	5077A
ECG5077A	5077A
ECG5078	5078A
ECG5078A	5078A
ECG5079	5079A
ECG5079A	5079A
ECG5080	5080A
ECG5080A	5080A
ECG5081	5081A
ECG5081A	5081A
ECG5082	5082A
ECG5082A	5082A
ECG5083	5083A
ECG5083A	5083A
ECG5084	5084A
ECG5084A	5084A
ECG5085	5085A
ECG5085A	5085A
ECG5086	5086A
ECG5086A	5086A
ECG5087	5087A
ECG5087A	5087A
ECG5088	5088A
ECG5088A	5088A
ECG5089	5089A

PART NUMBER	NTE REPLACEMENT
ECG5089A	5089A
ECG5090	5090A
ECG5090A	5090A
ECG5091	5091A
ECG5091A	5091A
ECG5092	5092A
ECG5092A	5092A
ECG5093	5093A
ECG5093A	5093A
ECG5094	5094A
ECG5094A	5094A
ECG5095	5095A
ECG5095A	5095A
ECG5096	5096A
ECG5096A	5096A
ECG5097	5097A
ECG5097A	5097A
ECG5098	5098A
ECG5098A	5098A
ECG5099	5099A
ECG5099A	5099A
ECG5100	5100A
ECG5100A	5100A
ECG5101	5101A
ECG5101A	5101A
ECG5102	5102A
ECG5102A	5102A
ECG5103	5103A
ECG5103A	5103A
ECG5104	5104A
ECG5104A	5104A
ECG5105	5105A
ECG5105A	5105A
ECG5111	5111A
ECG5111A	5111A
ECG5112	5112A
ECG5112A	5112A
ECG5113	5113A
ECG5113A	5113A
ECG5114	5114A
ECG5114A	5114A
ECG5115	5115A
ECG5115A	5115A
ECG5116	5116A
ECG5116A	5116A
ECG5117	5117A
ECG5117A	5117A
ECG5118	5118A
ECG5118A	5118A
ECG5119	5119A
ECG5119A	5119A
ECG5120	5120A
ECG5120A	5120A
ECG5121	5121A
ECG5121A	5121A
ECG5122	5122A
ECG5122A	5122A
ECG5123	5123A
ECG5123A	5123A
ECG5124	5124A
ECG5124A	5124A
ECG5125	5125A
ECG5125A	5125A
ECG5126	5126A
ECG5126A	5126A
ECG5127	5127A
ECG5127A	5127A
ECG5128	5128A
ECG5128A	5128A
ECG5129	5129A
ECG5129A	5129A
ECG5130	5130A
ECG5130A	5130A
ECG5131	5131A
ECG5131A	5131A
ECG5132	5132A
ECG5132A	5132A
ECG5133	5133A
ECG5133A	5133A
ECG5134	5134A
ECG5134A	5134A
ECG5135	5135A
ECG5135A	5135A
ECG5136	5136A
ECG5136A	5136A
ECG5137	5137A
ECG5137A	5137A
ECG5138	5138A
ECG5138A	5138A
ECG5139	5139A
ECG5139A	5139A
ECG5140	5140A
ECG5140A	5140A
ECG5141	5141A
ECG5141A	5141A
ECG5142	5142A
ECG5142A	5142A
ECG5143	5143A
ECG5143A	5143A
ECG5144	5144A
ECG5144A	5144A
ECG5145	5145A
ECG5145A	5145A
ECG5146	5146A
ECG5146A	5146A
ECG5147	5147A
ECG5147A	5147A
ECG5148	5148A
ECG5148A	5148A
ECG5149	5149A
ECG5149A	5149A
ECG5150	5150A
ECG5150A	5150A
ECG5151	5151A
ECG5151A	5151A
ECG5152	5152A
ECG5152A	5152A
ECG5153	5153A
ECG5153A	5153A
ECG5154	5154A
ECG5154A	5154A
ECG5155	5155A
ECG5155A	5155A
ECG5156	5156A
ECG5156A	5156A
ECG5157	5157A
ECG5157A	5157A
ECG5158	5158A
ECG5158A	5158A
ECG5159	5159A
ECG5159A	5159A
ECG5160	5160A
ECG5160A	5160A
ECG5161	5161A
ECG5161A	5161A
ECG5162	5162A
ECG5162A	5162A
ECG5163	5163A
ECG5163A	5163A
ECG5164	5164A
ECG5164A	5164A
ECG5165	5165A
ECG5165A	5165A
ECG5166	5166A
ECG5166A	5166A
ECG5174	5174A
ECG5174A	5174A
ECG5174AK	5174AK
ECG5174K	5174AK
ECG5175	5175A
ECG5175A	5175A
ECG5175AK	5175AK
ECG5175K	5175AK
ECG5176	5176A
ECG5176A	5176A
ECG5176AK	5176AK
ECG5176K	5176AK
ECG5177	5177A
ECG5177A	5177A
ECG5177AK	5177AK
ECG5177K	5177AK
ECG5178	5178A
ECG5178A	5178A
ECG5178AK	5178AK
ECG5178K	5178AK
ECG5179	5179A
ECG5179A	5179A
ECG5179AK	5179AK
ECG5179K	5179AK
ECG5180	5180A
ECG5180A	5180A
ECG5180AK	5180AK
ECG5180K	5180AK
ECG5181	5181A
ECG5181A	5181A
ECG5181AK	5181AK
ECG5181K	5181AK
ECG5182	5182A
ECG5182A	5182A
ECG5182AK	5182AK
ECG5182K	5182AK
ECG5183	5183A
ECG5183A	5183A
ECG5183AK	5183AK
ECG5183K	5183AK
ECG5184	5184A
ECG5184A	5184A
ECG5184AK	5184AK
ECG5184K	5184AK
ECG5185	5185A
ECG5185A	5185A
ECG5185AK	5185AK
ECG5185K	5185AK
ECG5186	5186A
ECG5186A	5186A
ECG5186AK	5186AK
ECG5186K	5186AK
ECG5187	5187A
ECG5187A	5187A
ECG5187AK	5187AK
ECG5187K	5187AK
ECG5188	5188A
ECG5188A	5188A
ECG5188AK	5188AK
ECG5188K	5188AK
ECG5189	5189A
ECG5189A	5189A
ECG5189AK	5189AK
ECG5189K	5189AK
ECG5190	5190A
ECG5190A	5190A
ECG5190AK	5190AK
ECG5190K	5190AK
ECG5191	5191A
ECG5191A	5191A
ECG5191AK	5191AK
ECG5191K	5191AK
ECG5192	5192A
ECG5192A	5192A
ECG5192AK	5192AK
ECG5192K	5192AK
ECG5193	5193A
ECG5193A	5193A
ECG5193AK	5193AK
ECG5193K	5193AK
ECG5194	5194A
ECG5194A	5194A
ECG5194AK	5194AK
ECG5194K	5194AK
ECG5195	5195A
ECG5195A	5195A
ECG5195AK	5195AK
ECG5195K	5195AK
ECG5196	5196A
ECG5196A	5196A
ECG5196AK	5196AK
ECG5196K	5196AK
ECG5197	5197A
ECG5197A	5197A
ECG5197AK	5197AK
ECG5197K	5197AK
ECG5198A	5198A
ECG5198AK	5198AK
ECG5198K	5198AK
ECG5199	5199A
ECG5199A	5199A
ECG5199AK	5199AK
ECG5199K	5199AK
ECG5200	5200A
ECG5200A	5200A
ECG5200AK	5200AK
ECG5200K	5200AK
ECG5201	5201A
ECG5201A	5201A
ECG5201AK	5201AK
ECG5201K	5201AK
ECG5202	5202A
ECG5202A	5202A
ECG5202AK	5202AK
ECG5202K	5202AK
ECG5203	5203A
ECG5203A	5203A
ECG5203AK	5203AK
ECG5203K	5203AK
ECG5204	5204A
ECG5204A	5204A
ECG5204AK	5204AK
ECG5204K	5204AK
ECG5205	5205A
ECG5205A	5205A
ECG5205AK	5205AK
ECG5205K	5205AK
ECG5206	5206A
ECG5206A	5206A
ECG5206AK	5206AK
ECG5206K	5206AK
ECG5207	5207A
ECG5207A	5207A
ECG5207AK	5207AK
ECG5207K	5207AK
ECG5208	5208A
ECG5208A	5208A
ECG5208AK	5208AK
ECG5208K	5208AK
ECG5209	5209A
ECG5209A	5209A
ECG5209AK	5209AK
ECG5209K	5209AK
ECG5210	5210A
ECG5210A	5210A
ECG5210AK	5210AK
ECG5210K	5210AK
ECG5211	5211A
ECG5211A	5211A
ECG5211AK	5211AK
ECG5211K	5211AK
ECG5212	5212A
ECG5212A	5212A
ECG5212AK	5212AK
ECG5212K	5212AK
ECG5213	5213A
ECG5213A	5213A
ECG5213AK	5213AK
ECG5213K	5213AK
ECG5214A	5214A
ECG5214AK	5214AK
ECG5214K	5214AK
ECG5215	5215A
ECG5215A	5215A
ECG5215AK	5215AK
ECG5215K	5215AK
ECG5216	5216A
ECG5216A	5216A
ECG5216AK	5216AK
ECG5216K	5216AK
ECG5217	5217A
ECG5217A	5217A
ECG5217AK	5217AK
ECG5217K	5217AK
ECG5218	5218A
ECG5218A	5218A
ECG5218AK	5218AK
ECG5218K	5218AK
ECG5219	5219A
ECG5219A	5219A
ECG5219AK	5219AK
ECG5219K	5219AK
ECG5220	5220A
ECG5220A	5220A
ECG5220AK	5220AK
ECG5220K	5220AK
ECG5221	5221A
ECG5221A	5221A
ECG5221AK	5221AK
ECG5221K	5221AK
ECG5222	5222A
ECG5222A	5222A
ECG5222AK	5222AK
ECG5222K	5222AK
ECG5223	5223A
ECG5223A	5223A
ECG5223AK	5223AK
ECG5223K	5223AK
ECG5224	5224A
ECG5224A	5224A
ECG5224AK	5224AK
ECG5224K	5224AK
ECG5225	5225A
ECG5225A	5225A
ECG5225AK	5225AK
ECG5225K	5225AK
ECG5226	5226A
ECG5226A	5226A
ECG5226AK	5226AK
ECG5226K	5226AK
ECG5227	5227A
ECG5227A	5227A
ECG5227AK	5227AK
ECG5227K	5227AK
ECG5228	5228A
ECG5228A	5228A
ECG5228AK	5228AK
ECG5228K	5228AK
ECG5229	5229A
ECG5229A	5229A
ECG5229AK	5229AK
ECG5229K	5229AK
ECG5230	5230A
ECG5230A	5230A
ECG5230AK	5230AK
ECG5230K	5230AK
ECG5231	5231A
ECG5231A	5231A
ECG5231AK	5231AK
ECG5231K	5231AK
ECG5232	5232A
ECG5232A	5232A
ECG5232AK	5232AK
ECG5232K	5232AK
ECG5240	5240A
ECG5240A	5240A
ECG5240AK	5240AK
ECG5240K	5240AK
ECG5241	5241A
ECG5241A	5241A
ECG5241AK	5241AK
ECG5241K	5241AK
ECG5242	5242A
ECG5242A	5242A
ECG5242AK	5242AK
ECG5242K	5242AK
ECG5243	5243A
ECG5243A	5243A
ECG5243AK	5243AK
ECG5243K	5243AK
ECG5244	5244A
ECG5244A	5244A
ECG5244AK	5244AK
ECG5244K	5244AK
ECG5245	5245A
ECG5245A	5245A
ECG5245AK	5245AK
ECG5245K	5245AK
ECG5246	5246A
ECG5246A	5246A
ECG5246AK	5246AK
ECG5246K	5246AK
ECG5247	5247A
ECG5247A	5247A
ECG5247AK	5247AK
ECG5247K	5247AK
ECG5248	5248A
ECG5248A	5248A
ECG5248AK	5248AK
ECG5248K	5248AK
ECG5249	5249A
ECG5249A	5249A
ECG5249AK	5249AK
ECG5249K	5249AK
ECG5250	5250A
ECG5250A	5250A
ECG5250AK	5250AK
ECG5250K	5250AK
ECG5251	5251A
ECG5251A	5251A
ECG5251AK	5251AK
ECG5251K	5251AK
ECG5252	5252A
ECG5252A	5252A
ECG5252AK	5252AK
ECG5252K	5252AK
ECG5253	5253A
ECG5253A	5253A
ECG5253AK	5253AK
ECG5253K	5253AK
ECG5254	5254A
ECG5254A	5254A
ECG5254AK	5254AK
ECG5254K	5254AK
ECG5255	5255A
ECG5255A	5255A
ECG5255AK	5255AK
ECG5255K	5255AK
ECG5256	5256A
ECG5256A	5256A
ECG5256AK	5256AK
ECG5256K	5256AK
ECG5257	5257A
ECG5257A	5257A
ECG5257AK	5257AK
ECG5257K	5257AK
ECG5258	5258A
ECG5258A	5258A
ECG5258AK	5258AK
ECG5258K	5258AK
ECG5259	5259A
ECG5259A	5259A
ECG5259AK	5259AK
ECG5259K	5259AK
ECG5260	5260A
ECG5260A	5260A
ECG5260AK	5260AK
ECG5260K	5260AK
ECG5261	5261A
ECG5261A	5261A
ECG5261AK	5267AK
ECG5261K	5261AK
ECG5262	5262A
ECG5262A	5262A
ECG5262AK	5262AK
ECG5262K	5262AK
ECG5263	5263A
ECG5263A	5263A
ECG5263AK	5263AK
ECG5263K	5263AK
ECG5264	5264A
ECG5264A	5264A
ECG5264AK	5264AK
ECG5264K	5264AK
ECG5265	5265A
ECG5265A	5265A
ECG5265AK	5265AK
ECG5265K	5265AK
ECG5266	5266A
ECG5266A	5266A
ECG5266AK	5266AK
ECG5266K	5266AK
ECG5267	5267A
ECG5267A	5267A
ECG5267AK	5267AK
ECG5267K	5267AK
ECG5268	5268A
ECG5268A	5268A
ECG5268AK	5268AK
ECG5268K	5268AK
ECG5269	5269A
ECG5269A	5269A
ECG5269AK	5269AK
ECG5269K	5269AK
ECG5270	5270A
ECG5270A	5270A
ECG5270AK	5270AK
ECG5270K	5270AK
ECG5271	5271A
ECG5271A	5271A
ECG5271AK	5271AK
ECG5271K	5271AK
ECG5272	5272A
ECG5272A	5272A
ECG5272AK	5272AK
ECG5272K	5272AK
ECG5273	5273A
ECG5273A	5273A
ECG5273AK	5273AK
ECG5273K	5273AK
ECG5274	5274A
ECG5274A	5274A
ECG5274AK	5247AK
ECG5274K	5274AK
ECG5275	5275A
ECG5275A	5275A
ECG5275AK	5275AK
ECG5275K	5275AK
ECG5276	5276A
ECG5276A	5276A
ECG5276AK	5276AK
ECG5276K	5276AK
ECG5277	5277A
ECG5277A	5277A
ECG5277AK	5277AK
ECG5277K	5277AK
ECG5278	5278A
ECG5278A	5278A
ECG5278AK	5278AK
ECG5278K	5278AK
ECG5279	5279A
ECG5279A	5279A
ECG5279AK	5279AK
ECG5279K	5279AK
ECG5280	5280A
ECG5280A	5280A
ECG5280AK	5280AK
ECG5280K	5280AK
ECG5281	5281A
ECG5281A	5281A
ECG5281AK	5281AK
ECG5281K	5281AK
ECG5282	5282A
ECG5282A	5282A
ECG5282AK	5282AK
ECG5282K	5282AK
ECG5283	5283A
ECG5283A	5283A
ECG5283AK	5283AK
ECG5283K	5283AK
ECG5284	5284A
ECG5284A	5284A
ECG5284AK	5284AK
ECG5284K	5284AK
ECG5285	5285A
ECG5285A	5285A
ECG5285AK	5285AK
ECG5285K	5285AK
ECG5286	5286A
ECG5286A	5286A
ECG5286AK	5286AK
ECG5286K	5286AK
ECG5287	5287A
ECG5287A	5287A
ECG5287AK	5287AK
ECG5287K	5287AK
ECG5288	5288A
ECG5288A	5288A
ECG5288AK	5288AK
ECG5288K	5288AK
ECG5289	5289A
ECG5289A	5289A
ECG5289AK	5289AK
ECG5289K	5289AK
ECG5290	5290A
ECG5290A	5290A
ECG5290AK	5290AK
ECG5290K	5290AK
ECG5291	5291A
ECG5291A	5291A
ECG5291AK	5291AK
ECG5291K	5291AK
ECG5292	5292A
ECG5292A	5292A
ECG5292AK	5292AK
ECG5292K	5292AK
ECG5293	5293A
ECG5293A	5293A
ECG5293AK	5293AK
ECG5293K	5293AK
ECG5294	5294A
ECG5294A	5294A
ECG5294AK	5294AK
ECG5294K	5294AK
ECG5295	5295A
ECG5295A	5295A
ECG5295AK	5295AK
ECG5295K	5295AK
ECG5296	5296A
ECG5296A	5296A
ECG5296AK	5296AK
ECG5296K	5296AK
ECG5304	5304
ECG5305	5305
ECG5306	5306
ECG5307	5307
ECG5309	5309
ECG5310	5310
ECG5311	5311
ECG5312	5312
ECG5313	5313
ECG5314	5314
ECG5315	5315
ECG5316	5316
ECG5317	5317
ECG5318	5318
ECG5319	5319
ECG5320	5320
ECG5322	5322
ECG5324	5324
ECG5326	5326
ECG5327	5327
ECG5328	5328
ECG5329	5329
ECG5330	5330
ECG5331	5331
ECG5335	5335
ECG5338	5338
ECG5340	5340
ECG5342	5342
ECG5344	5344
ECG5346	5346
ECG5348	5348
ECG5351	5351
ECG5360	5360
ECG5368	5368
ECG5369	5369
ECG5371	5371
ECG5372	5372
ECG5374	5374
ECG5375	5375
ECG5377	5377
ECG5378	5378
ECG5380	5380
ECG5381	5381
ECG5386	5386
ECG5387	5387
ECG5400	5400
ECG5401	5401
ECG5402	5402
ECG5403	5403
ECG5404	5404
ECG5405	5405
ECG5409	5409
ECG5410	5410
ECG5411	5411
ECG5412	5412
ECG5413	5413
ECG5414	5414
ECG5415	5415
ECG5416	5416
ECG5417	5417
ECG5418	5418
ECG5419	5419
ECG5426	5426
ECG5427	5427
ECG5428	5428
ECG5429	5429
ECG5437	5437
ECG5438	5438
ECG5442	5442
ECG5444	5444
ECG5446	5446
ECG5448	5448
ECG5452	5452
ECG5453	5453
ECG5454	5454
ECG5455	5455
ECG5456	5456
ECG5457	5457
ECG5458	5458
ECG5461	5461
ECG5462	5462
ECG5463	5463
ECG5465	5465
ECG5466	5466
ECG5468	5468
ECG5470	5470
ECG5471	5471
ECG5472	5472
ECG5473	5473
ECG5474	5474
ECG5475	5475
ECG5476	5476
ECG5480	5480
ECG5481	5481
ECG5482	5482
ECG5483	5483
ECG5484	5484
ECG5485	5485
ECG5486	5486
ECG5487	5487
ECG5491	5491
ECG5492	5492
ECG5494	5494
ECG5496	5496
ECG5500	5500
ECG5501	5501
ECG5502	5502
ECG5503	5503
ECG5504	5504
ECG5505	5505
ECG5506	5506
ECG5507	5507
ECG5508	5508
ECG5509	5509
ECG5511	5511
ECG5512	5512
ECG5513	5513
ECG5514	5514
ECG5515	5515
ECG5516	5516
ECG5517	5517
ECG5518	5518
ECG5519	5519
ECG5520	5520
ECG5521	5521
ECG5522	5522
ECG5523	5523
ECG5524	5524
ECG5525	5525
ECG5526	5526
ECG5527	5527
ECG5528	5528
ECG5529	5529
ECG5530	5530
ECG5531	5531
ECG5534	5534
ECG5536	5536
ECG5538	5538
ECG5539	5539
ECG5540	5540
ECG5541	5541
ECG5542	5542
ECG5543	5543
ECG5544	5544
ECG5545	5545
ECG5546	5546
ECG5547	5547
ECG5548	5548
ECG5550	5550
ECG5552	5552
ECG5554	5554
ECG5556	5556
ECG5558	5558
ECG5562	5562
ECG5564	5564
ECG5566	5566
ECG5567	5567
ECG5568	5568
ECG5569	5569
ECG5577	5577
ECG5579	5579
ECG5587	5587
ECG5589	5589
ECG5590	5590
ECG5594	5594
ECG5595	5595
ECG5596	5596
ECG5598	5598
ECG5599	5599
ECG5600	5600
ECG5601	5601
ECG5603	5603
ECG5604	5604
ECG5605	5605
ECG5606	5606
ECG5607	5607
ECG5608	5608
ECG5609	5609
ECG5610	5610
ECG5611	5611
ECG5612	5612
ECG5613	5613
ECG5614	5614
ECG5615	5615
ECG5617	5617
ECG5618	5618
ECG5620	5620
ECG5621	5621
ECG5622	5622
ECG5623	5623
ECG5627	5627

PART NUMBER	NTE REPLACEMENT
ECG5628	5637
ECG5629	5629
ECG5631	5631
ECG5632	5632
ECG5633	5633
ECG5634	5634
ECG5635	5635
ECG5636	5636
ECG5637	5637
ECG5638	5638
ECG5640	5640
ECG5641	5641
ECG5642	5642
ECG5643	5643
ECG5646	5646
ECG5649	5679
ECG5650	5650
ECG5651	5651
ECG5652	5652
ECG5671	5671
ECG5673	5673
ECG5675	5675
ECG5676	5676
ECG5677	5677
ECG5679	5679
ECG5680	5680
ECG5681	5681
ECG5682	5682
ECG5683	5683
ECG5684	5684
ECG5685	5685
ECG5686	5686
ECG5687	5687
ECG5688	5688
ECG5689	5689
ECG5690	5690
ECG5693	5693
ECG5695	5695
ECG5697	5697
ECG5699	5699
ECG5700	5700
ECG5701	5701
ECG5702	5702
ECG5703	5703
ECG5704	5704
ECG5705	5705
ECG5710	5710
ECG5711	5711
ECG5712	5712
ECG5720	5720
ECG5721	5721
ECG5722	5722
ECG5800	5800
ECG5801	5801
ECG5802	5802
ECG5803	5803
ECG5804	5804
ECG5805	5805
ECG5806	5806
ECG5808	5808
ECG5809	5809
ECG5812	5812
ECG5814	5814
ECG5815	5815
ECG5817	5817
ECG5818	5818
ECG5819	5819
ECG5820	5820
ECG5821	5821
ECG5822	5822
ECG5823	5823
ECG5830	5830
ECG5831	5831
ECG5832	5832
ECG5833	5833
ECG5834	5834
ECG5835	5835
ECG5836	5836
ECG5837	5837
ECG5838	5838
ECG5839	5839
ECG5840	5840
ECG5841	5841
ECG5842	5842
ECG5843	5843
ECG5846	5846
ECG5847	5847
ECG5848	5848
ECG5849	5849
ECG5850	5850
ECG5851	5851
ECG5852	5852
ECG5853	5853
ECG5854	5854
ECG5855	5855
ECG5856	5856
ECG5857	5857
ECG5858	5858
ECG5859	5859
ECG5860	5860
ECG5861	5861
ECG5862	5862
ECG5863	5863
ECG5866	5866
ECG5867	5867
ECG5868	5868
ECG5869	5869
ECG5870	5870
ECG5871	5871
ECG5872	5872
ECG5873	5873
ECG5874	5874
ECG5875	5875
ECG5876	5876

PART NUMBER	NTE REPLACEMENT
ECG5877	5877
ECG5878	5878
ECG5879	5879
ECG5880	5880
ECG5881	5881
ECG5882	5882
ECG5883	5883
ECG5886	5886
ECG5887	5887
ECG5890	5890
ECG5891	5891
ECG5892	5892
ECG5893	5893
ECG5894	5894
ECG5895	5895
ECG5896	5896
ECG5897	5897
ECG5898	5898
ECG5899	5899
ECG5900	5900
ECG5901	5901
ECG5902	5902
ECG5903	5903
ECG5904	5904
ECG5905	5905
ECG5908	5908
ECG5909	5909
ECG5910	5910
ECG5911	5911
ECG5912	5912
ECG5913	5913
ECG5914	5914
ECG5915	5915
ECG5916	5916
ECG5917	5917
ECG5918	5918
ECG5919	5919
ECG5920	5920
ECG5921	5921
ECG5922	5922
ECG5923	5923
ECG5924	5924
ECG5925	5925
ECG5928	5928
ECG5929	5929
ECG5932	5932
ECG5933	5933
ECG5940	5940
ECG5941	5941
ECG5942	5942
ECG5943	5943
ECG5944	5944
ECG5945	5945
ECG5946	5946
ECG5947	5947
ECG5948	5948
ECG5949	5949
ECG5950	5950
ECG5951	5951
ECG5952	5952
ECG5953	5953
ECG5962	5962
ECG5963	5963
ECG5966	5966
ECG5967	5967
ECG5980	5980
ECG5981	5981
ECG5982	5982
ECG5983	5983
ECG5986	5986
ECG5987	5987
ECG5988	5988
ECG5989	5989
ECG5990	5990
ECG5991	5991
ECG5992	5992
ECG5993	5993
ECG5994	5994
ECG5995	5995
ECG5998	5998
ECG5999	5999
ECG6002	6002
ECG6003	6003
ECG6006	6006
ECG6007	6007
ECG6008	6008
ECG6009	6009
ECG6010	6010
ECG6011	6011
ECG6020	6020
ECG6021	6021
ECG6022	6022
ECG6023	6023
ECG6026	6026
ECG6027	6027
ECG6030	6030
ECG6031	6031
ECG6034	6034
ECG6035	6035
ECG6038	6038
ECG6039	6039
ECG6040	6040
ECG6041	6041
ECG6042	6042
ECG6043	6043
ECG6044	6044
ECG6045	6045
ECG6048	6048
ECG6049	6049
ECG6050	6050
ECG6051	6051
ECG6054	6054
ECG6055	6055
ECG6058	6058

PART NUMBER	NTE REPLACEMENT
ECG6059	6059
ECG6060	6060
ECG6061	6061
ECG6064	6064
ECG6065	6065
ECG6068	6068
ECG6069	6069
ECG6072	6072
ECG6073	6073
ECG6074	6074
ECG6075	6075
ECG6076	6076
ECG6077	6077
ECG6078	6078
ECG6079	6079
ECG6084	6084
ECG6085	6085
ECG6087	6087
ECG6090	6090
ECG6094	6094
ECG6102	6102
ECG6103	6103
ECG6104	6104
ECG6105	6105
ECG6106	6106
ECG6107	6107
ECG6110	6110
ECG6112	6112
ECG6113	6113
ECG6115	6115
ECG6116	6116
ECG6118	6118
ECG6154	6154
ECG6155	6155
ECG6156	6156
ECG6157	6157
ECG6158	6158
ECG6159	6159
ECG6162	6162
ECG6163	6163
ECG6200	6200
ECG6202	6202
ECG6204	6204
ECG6206	6206
ECG6208	6208
ECG6210	6210
ECG6220	6220
ECG6230	6230
ECG6240	6240
ECG6241	6241
ECG6244	6244
ECG6246	6246
ECG6247	6247
ECG6354	6354
ECG6355	6355
ECG6356	6356
ECG6357	6357
ECG6358	6358
ECG6359	6359
ECG6362	6362
ECG6363	6363
ECG6400	6400
ECG6400A	6400A
ECG6400B	6400A
ECG6401	6401
ECG6402	6402
ECG6403	6403
ECG6404	6404
ECG6405	6405
ECG6407	6407
ECG6408	6408
ECG6409	6409
ECG6410	6410
ECG6411	6411
ECG6412	6412
ECG6415	6415
ECG6416	6416
ECG6417	6417
ECG6418	6418
ECG6419	6419
ECG6502	6502
ECG6507	6507
ECG6508	6508
ECG6532	6532
ECG6809	6809
ECG6809E	6809E
ECG6860	6860
ECG6880	6880
ECG6885	6885
ECG6886	6886
ECG6887	6887
ECG6888	6888
ECG6889	6889
ECG7000	7000
ECG7001	7001
ECG7002	7002
ECG7005	7005
ECG7006	7006
ECG7007	7007
ECG7008	7008
ECG7014	7014
ECG7015	7015
ECG7016	7016
ECG7019	7019
ECG7020	7020
ECG7214	7214
ECG7400	7400
ECG7401	7401
ECG7402	7402
ECG7403	7403
ECG7404	7404
ECG7405	7405
ECG7406	7406
ECG7407	7407

PART NUMBER	NTE REPLACEMENT
ECG7408	7408
ECG7409	7409
ECG7410	7410
ECG7411	7411
ECG7411A	74110
ECG7412	7412
ECG7413	7413
ECG7414	7414
ECG7416	7416
ECG7417	7417
ECG7420	7420
ECG7421	7421
ECG7422	7422
ECG7423	7423
ECG7425	7425
ECG7426	7426
ECG7427	7427
ECG7428	7428
ECG7430	7430
ECG7432	7432
ECG7433	7433
ECG7437	7437
ECG7438	7438
ECG7439	7439
ECG7440	7440
ECG7442	7442
ECG7443	7443
ECG7444	7444
ECG7445	7445
ECG7446	7446
ECG7447	7447
ECG7448	7448
ECG7450	7450
ECG7451	7451
ECG7453	7453
ECG7454	7454
ECG7460	7460
ECG7470	7470
ECG7472	7472
ECG7473	7473
ECG7474	7474
ECG7475	7475
ECG7476	7476
ECG7480	7480
ECG7482	7482
ECG7483	7483
ECG7485	7485
ECG7486	7486
ECG7489	7489
ECG7490	7490
ECG7491	7491
ECG7492	7492
ECG7493A	7493A
ECG7494	7494
ECG7495	7495
ECG7496	7496
ECG7497	7497
ECG8070	8070
ECG8076	8076
ECG8080A	8080A
ECG8081	8081
ECG8085	8085
ECG8090	8090
ECG8096	8096
ECG8098	8098
ECG8103	8103
ECG8108	8108
ECG8115	8115
ECG8118	8118
ECG8123	8123
ECG8125	8125
ECG8139	8139
ECG8149	8149
ECG8167	8167
ECG8181	8181
ECG8212	8212
ECG8213	8213
ECG8214	8214
ECG8216	8216
ECG8226	8226
ECG8234	8234
ECG8235	8235
ECG8242	8242
ECG8255	8255
ECG8266	8266
ECG8309	8309
ECG8328	8328
ECG8370	8370
ECG8520	8520
ECG8542	8542
ECG8546	8546
ECG8556	8556
ECG9093	9093
ECG9094	9094
ECG9097	9097
ECG9099	9099
ECG9135	9135
ECG9157	9157
ECG9158	9158
ECG9200	9200
ECG9222	922
ECG9370	9370
ECG9403	9403
ECG9601	9601
ECG9660	9660
ECG9661	9661
ECG9664	9664
ECG9666	9666
ECG9668	9668
ECG9669	9669
ECG9670	9670
ECG9671	9671
ECG9672	9672
ECG9675	9675

PART NUMBER	NTE REPLACEMENT
ECG9680	9680
ECG9681	9681
ECG9682	9682
ECG9689	9689
ECG9691	9691
ECG9800	9800
ECG9801	9801
ECG9802	9802
ECG9803	9803
ECG9804	9804
ECG9805	9805
ECG9806	9806
ECG9807	9807
ECG9808	9808
ECG9809	9809
ECG9810	9810
ECG9811	9811
ECG9812	9812
ECG9814	9814
ECG9924	9924
ECG9930	9930
ECG9932	9932
ECG9933	9933
ECG9935	9935
ECG9936	9936
ECG9937	9937
ECG9944	9944
ECG9945	9945
ECG9946	9946
ECG9948	9948
ECG9949	9949
ECG9950	9950
ECG9951	9951
ECG9961	9961
ECG9962	9962
ECG9963	9963
ECG9989	9989
ECG15005	15005E
ECG15006	15006E
ECG15007	15007E
ECG15008	15008E
ECG15009	15009E
ECG15019	15019E
ECG15020	15020E
ECG15021	15021E
ECG15022	15022E
ECG15023	15023E
ECG40085	40085B
ECG40085B	40085B
ECG40097	40097B
ECG40097B	40097B
ECG40098	40098B
ECG40098B	40098B
ECG40100B	40100B
ECG40106B	40106B
ECG40160	40160B
ECG40160B	40160B
ECG40161	40161B
ECG40161B	40161B
ECG40162	40162B
ECG40162B	40162B
ECG40163	40163B
ECG40163B	40163B
ECG40174	40174B
ECG40174B	40174B
ECG40175B	40175B
ECG40182B	40182B
ECG40192	40192B
ECG40192B	40192B
ECG40193	40193B
ECG40193B	40193B
ECG40194	40194B
ECG40194B	40194B
ECG40195	40195B
ECG40195B	40195B
ECG56004	56004
ECG56006	56006
ECG56008	56008
ECG56010	56010
ECG56014	56014
ECG56015	56015
ECG56017	56017
ECG56019	56019
ECG56020	56020
ECG56022	56022
ECG56024	56024
ECG56026	56026
ECG56028	56028
ECG56030	56030
ECG56031	56031
ECG56033	56033
ECG65101	65101
ECG74107	74107
ECG74109	74109
ECG74110	74110
ECG74111	74111
ECG74121	74121
ECG74122	74122
ECG74123	74123
ECG74125	74125
ECG74126	74126
ECG74128	74128
ECG74132	74132
ECG74136	74136
ECG74141	74141
ECG74145	74145
ECG74147	74147
ECG74150	74150
ECG74151	74151
ECG74152	74152
ECG74153	74153
ECG74154	74154
ECG74155	74155
ECG74156	74156

PART NUMBER	NTE REPLACEMENT
ECG74157	74157
ECG74158	74158
ECG74160	74160
ECG74161	74161
ECG74162	74162
ECG74163	74163
ECG74164	74164
ECG74165	74165
ECG74166	74166
ECG74170	74170
ECG74173	74173
ECG74174	74174
ECG74175	74175
ECG74176	74176
ECG74177	74177
ECG74178	74178
ECG74179	74179
ECG74180	74180
ECG74181	74181
ECG74182	74182
ECG74190	74190
ECG74191	74191
ECG74192	74192
ECG74193	74193
ECG74195	74195
ECG74196	74196
ECG74197	74197
ECG74198	74198
ECG74199	74199
ECG74221	74221
ECG74251	74251
ECG74365	74365
ECG74366	74366
ECG74367	74367
ECG74368	74368
ECG74390	74390
ECG74393	74393
ECG75188	75188
ECG75450B	75450B
ECG75451B	75451B
ECG75452B	75452B
ECG75453B	75453B
ECG75454B	75454B
ECG75491B	75491B
ECG75492B	75492B
ECG75494	75494
ECGHIDIV-1	HVD-1
ECGHIDIV-2	HVD-2
ECGHIDIV-3	HVD-3
ECGHIDIV-4	HVD-4
ECGHIDIV-12	HVD-12
ECR0510	125
ECR24-04	552
ECR600-2	116
ECR-600-2	116
ED0031	552
ED0036	5012A
ED0039	145A
ED0056	552
ED0059	116
ED0067	5605
ED0084A	5011A
ED0084B	5011A
ED0084C	5012A
ED0084D	5012A
ED0109E	5013A
ED0120	116
ED036	5012A
ED0111	5003A
ED0147	5003A
ED0173	125
ED0214F	5013A
ED0328	5014A
ED0353	552
ED2(ELCOM)	112
ED3(ELCOM)	112
ED4	116
ED4(ELCOM)	109
ED5	116
ED6	116
ED6.2EB	137A
ED6.2ESB1	5013A
ED6(ELCOM)	109
ED7	116
ED7(ELCOM)	112
ED8(ELCOM)	156
ED9(ELCOM)	109
ED10(ELCOM)	110MP
ED11(ELCOM)	110MP
ED11EB	5020A
ED12(ELCOM)	109
ED21(ELCOM)	177
ED23(ELCOM)	506
ED29(ELCOM)	156
ED31(ELCOM)	177
ED32(ELCOM)	177
ED33(ELCOM)	174
ED46	109
ED51	160
ED52	100
ED53	100
ED54B	100
ED55	102A
ED56	102A
ED57	102A
ED60	109
ED123	3020
ED150Z	123AP
ED201	3050
ED592K	229
ED592M	108
ED730	3041
ED1402A	123AP
ED1402A/09-305066	123AP

PART NUMBER	NTE REPLACEMENT
ED1402B	123AP
ED1402C	123AP
ED1402D	123AP
ED1402E	123AP
ED1502	229
ED1502A	229
ED1502B	123AP
ED1502C	123AP
ED1502D	123AP
ED1502E	229
ED1502P	229
ED1502R	123AP
ED1602C	159
ED1602D	159
ED1602E	159
ED1605E	159
ED1702D	123AP
ED1702L	123AP
ED1702L/09-305068	123AP
ED1702M	123AP
ED1702N	123AP
ED1702O	123AP
ED1704L	123AP
ED1802-0	106
ED1802M	159
ED1802N	159
ED1802N,M	106
ED1804	116
ED1892	116
ED2106	116
ED2107	116
ED2108	116
ED2109	116
ED2110	116
ED2842	116
ED2843	116
ED2844	116
ED2845	116
ED2846	116
ED2847	125
ED2848	125
ED2849	125
ED2910	125
ED2911	125
ED2912	125
ED2913	125
ED2914	116
ED2915	116
ED2916	116
ED2917	116
ED2918	116
ED2919	116
ED2920	116
ED2921	116
ED2922	125
ED2923	125
ED2924	125
ED3000	116
ED3000A	116
ED3000B	116
ED3001	116
ED3001A	116
ED3001B	116
ED3002	116
ED3002A	116
ED3002B	116
ED3003	116
ED3003A	116
ED3003B	116
ED3003S	116
ED3004	116
ED3004A	116
ED3004B	116
ED3005	116
ED3005A	116
ED3005B	116
ED3006	116
ED3006A	116
ED3006B	116
ED3007	125
ED3007A	125
ED3007B	125
ED3008	125
ED3008A	125
ED3008B	125
ED3009	125
ED3009A	125
ED3009B	125
ED3010	125
ED3010A	125
ED3010B	125
ED6495	508
ED219464	109
ED224548	116
ED224550	116
ED329128	116
ED329130	116
ED491130	5073A
ED494583	116
ED498150	5078A
ED511097	116
ED511918	5081A
ED514721	177
ED515790	177
ED516420	177
ED536062	177
ED560913	177
ED-4	116
ED-5	116
ED-6	116
ED-46	109
ED-60	109
ED-1402	123AP
ED-1502C	229

PART NUMBER	NTE REPLACEMENT
EDC TR11-4	128
EDC-Q10-1	123AP
EDC-TR11-4	128
EDC-TR11-5	128
EDC-TR-11-1	199
EDG-0003	109
EDG-0006	109
EDG-1	109
EDG-3	109
EDG-6	109
EDH6023	519
EDJ-363	116
EDMF25B	504
EDMF-15B	503
EDMF-25B	504
EDO 219	123AP
EDO-219	123AP
EDS-0001	177
EDS-0002	116
EDS-0004	125
EDS-0014	177
EDS-0017	116
EDS-0024	116
EDS-0038	601
EDS-0042	614
EDS-1	507
EDS-4	116
EDS-11	116
EDS-17	116
EDS-24	116
EDS-25	177
EDS-31	614
EDS-100	123AP
EDZ-0045	139A
EDZ-2	138A
EDZ-11	5075A
EDZ-14	5072A
EDZ-19	136A
EDZ-20	5071A
EDZ-23	139A
EDZ-24	5072A
EE5A-3.3	5066A
EE5A-3.6	134A
EE5A-3.9	5067A
EE5A-4.3	5068A
EE5A-4.7	5069A
EE5A-5.6	136A
EE5A-6.2	137A
EE5A-6.8	5071A
EE5A-7.5	138A
EE5A-8.2	5072A
EE5A-10	140A
EE5A-11	5074A
EE5A-12G	142A
EE5A-14	144A
EE5A-15	145A
EE5A-20G	5079A
EE5A-22	5080A
EE5A-24	5081A
EE5A-26	146A
EE5A-27	146A
EE5A-29	5084A
EE5A-33G	147A
EE5A-36	5085A
EE5A-39	5086A
EE5A-43	5087A
EE5A-47	5088A
EE5A-51	5089A
EE5A-55	148A
EE5A-56	5090A
EE5A-62A	149A
EE5A-68	5092A
EE5A-82P	150A
EE5A-91	5095A
EE5A-110A	151A
EE5A-115	141A
EE5A-120	5097A
EE5A-129	143A
EE5A-130	5098A
EE5A-140	5099A
EE5A-150	5100A
EE5A-160	5101A
EE5A-162	5075A
EE5A-170	5102A
EE5A-180	5103A
EE5A-190	5104A
EE5A-200	5105A
EE100	102
EE301	316
EECG-1234	289
EER600-2	117
EF1(ELCOM)	133
EF2(ELCOM)	132
EF3	132
EF4(ELCOM)	222
EF5(ELCOM)	222
EF100	125
EF200	525
EF2114	2114
EF2114C	2114
EF2114P	2114
EF2708	2708
EF2708C	2708
EF2708J	2708
EF4116B	2117
EF4116B-20	2117
EF4116B-25	2117
EF4116B-30	2117
EF4116BP	2117
EF6800	6800
EF6800C	6800
EF6800P	6800
EF6802	6802
EF6802C	6802
EF6802P	6802
EF6809	6809
EF6810C	6810
EF6810P	6810
EF6821	6821
EF6821C	6821
EF6821P	6821
EF6850	6850
EF6850C	6850
EF6850P	6850
EFF6875	6875
EFF6875C	6875
EG01	116
EG01Y	116
EG100	116
EG100H	116
EGA01-11	5074A
EGP20G	580
EH1	552
EH1A	552
EH1Z	552
EH2C11	116
EH2C11/7+12/1	116
EH16X20	177
EH-1A	552
EH-1Z	552
EH-1ZV	552
EI3-006-02	159
EICM-0060	1155
EICM-14	1103
EK03	585
EK04	585
EK04LF	585
EK136	102A
EK159	100
EK-03	585
EK-04	116
EK04LF	552
EL1Z	587
EL1Z-V1	552
EL75	229
EL131	133
EL214	128
EL231	107
EL232	123AP
EL238	123AP
EL264	129
EL401	172A
EL403	289
EL434	107
EL642	123AP
EL-45F	30001
ELIZ-V1	519
ELP3.3	5066A
ELP3.6	134A
ELP3.9	5067A
ELP4.3	5068A
ELP4.7	5069A
ELP5.6	136A
ELP6.2	137A
ELP6.8	5071A
ELP7.5	138A
ELP8.2	5072A
ELP9.1	139A
ELP10	140A
ELP11	5074A
ELP12G	142A
ELP14	145A
ELP15	145A
ELP20G	5079A
ELP22	5080A
ELP24	5081A
ELP26	146A
ELP27	146A
ELP29	5084A
ELP33G	147A
ELP36	5085A
ELP39G	5086A
ELP43	5087A
ELP47	5088A
ELP51	5089A
ELP55	148A
ELP56	5090A
ELP62C	149A
ELP68	5092A
ELP82B	150A
ELP91	5095A
ELP110	151A
ELP115G	141A
ELP120	5097A
ELP129	143A
ELP130	5098A
ELP140	5099A
ELP150	5100A
ELP160	5101A
ELP170	5102A
ELP178	5077A
ELP180	5103A
ELP190	5104A
ELP200	5105A
ELP200G	5105A
EM01Z	177
EM02BM	125
EM02BMV	125
EM02BMV0	125
EM02BMV0	125
EM1	116
EM1J2	116
EM1Y	116
EM1Z	552
EM1Z(HITACHI)	552
EM1ZV	116
EM2B	125
EM9-8	914
EM401	116
EM402	116
EM403	116
EM404	116
EM405	116
EM406	116
EM407	116
EM408	116
EM410	116
EM501	116
EM502	116
EM503	116
EM504	116
EM505	116
EM506	116
EM507	125
EM508	125
EM510	125
EM513	525
EM1021	116
EM-1	116
EM-1Z	116
EM-1Z(MITSUBISHI)	116
EM-1ZS	116
EM-1171	116
EM_1Z	116
EMS72258	519
EMS 72272	519
EMS72272	519
EMS73278	128
EMS73279	128
EMS-73500	123AP
EN10	123AP
EN30	123AP
EN40	123AP
EN697	123
EN706	123A
EN708	123A
EN718A	123A
EN722	159
EN744	123A
EN870	194
EN871	194
EN914	123A
EN916	123A
EN918	108-1
EN930	123A
EN956	123A
EN1132	129
EN1364	1231
EN1364/1231	1231
EN1613	128
EN1711	128
EN2218	123
EN2218A	123
EN2219	123
EN2219A	123
EN2221	123A
EN2221A	123A
EN2222	123A
EN2222A	123A
EN2369A	123A
EN2484	123A
EN2894	159
EN2894A	159
EN2904	129
EN2904A	129
EN2905	129
EN2905A	129
EN2906	159
EN2906A	159
EN2907	159
EN2907A	159
EN3009	123AP
EN3011	123A
EN3013	123AP
EN3014	123AP
EN3250	159
EN3502	129
EN3504	159
EN3903	123AP
EN3904	128
EN3905	159
EN3906	159
EN3962	159
EN4036	129
EN5172	107
EN5179	108-1
EN11436	1650
EN11438	986
ENB201D-05A	1V115
ENB201D-10A	2V115
ENB220D-05B	1V014
ENB220D-10B	2V014
ENB221D-05A	1V130
ENB221D-10	2V130
ENB221D-14A	524V13
ENB251D-05A	1V150
ENB251D-10A	2V150
ENB251D-14A	524V15
ENB270D-05B	1V017
ENB270D-10B	2V017
ENB330D-05B	1V020
ENB330D-10B	2V020
ENB401D-05A	1V250
ENB401D-10A	2V250
ENB401D-14A	524V25
ENB560D-05B	1V035
ENB560D-10B	2V035
ENB801D-14A	524V48
ENB850D-05A	1V050
ENB850D-10A	2V050
E015X57	159
EO44A	102A
EO65	100
EO66	100
EO67	100
EO68	100
EO70	126
EO105	100
EO704	116
EO771-3	139A
EO-44A	102
EP01C	588
EP5X5	116
EP6X10	177
EP6X11	506
EP15X1	123AP
EP15X2	123AP
EP15X3	199
EP15X4	129
EP15X5	128
EP15X6	289A
EP15X6(PNP)	17
EP15X7	123AP
EP15X8	123AP
EP15X9	123AP
EP15X10(SCR)	5404
EP15X10(TRANS)	191
EP15X11	196
EP15X12	238
EP15X13	193
EP15X14	196
EP15X15	153
EP15X16	124
EP15X17	159
EP15X18	154
EP15X19	198
EP15X19(METAL)	128
EP15X19(POWER)	375
EP15X20	233
EP15X21	193
EP15X22	152
EP15X23	153
EP15X24	211
EP15X25	210
EP15X26	159
EP15X27	191
EP15X28	165
EP15X29	181
EP15X30	196
EP15X32	186
EP15X33	128
EP15X35	124
EP15X36	5021A
EP15X37	107
EP15X38	107
EP15X39	123AP
EP15X40	222
EP15X41	229
EP15X42	229
EP15X43	196
EP15X44	197
EP15X45	165
EP15X47	123AP
EP15X48	290A
EP15X48(NPN)	123AP
EP15X48(PNP)	290
EP15X49	123AP
EP15X50	198
EP15X51	193
EP15X52	290
EP15X53	159
EP15X54	233
EP15X55	108
EP15X57	290A
EP15X58(TRANS)	54
EP15X60	159
EP15X61	171
EP15X64	222
EP15X68	152
EP15X83	123AP
EP15X85	123AP
EP15X86	123AP
EP15X87	123AP
EP15X88	123AP
EP15X89	123AP
EP15X90	960
EP15X90(IC)	960
EP15X91	190
EP15X92	312
EP15X94	163A
EP15X104	69
EP15X105	375
EP15X106	5404
EP15X106(SCR)	5404
EP15X107	159
EP15X108	94
EP15X123	375
EP15X126	290A
EP15X128	290A
EP15X217	5424
EP15X218	89
EP15X221	49
EP15X222	50
EP15X225	290A
EP15X226	123AP
EP15X228	49
EP15X288	49
EP16X1	178MP
EP16X2	5136A
EP16X3	109
EP16X4	177
EP16X5	145A
EP16X6	113A
EP16X7	128
EP16X8	614
EP16X10	506
EP16X11	506
EP16X12	138A
EP16X13	116
EP16X15	518
EP16X16	5081A
EP16X17	5100A
EP16X19	136A
EP16X19(5.1V)	135A
EP16X19(5.6V)	136A
EP16X20	177
EP16X21	110MP
EP16X22	177
EP16X23	177
EP16X24	558
EP16X25	135A
EP16X27	519
EP16X29	5066A
EP16X30	177
EP16X32	5089A
EP16X36	142A
EP16X42	112
EP16X52	145A
EP16X58	5026A
EP16X59	519
EP16X68	145A
EP16X73	5069A
EP16X74	5068A
EP16X148	5085A
EP16X149	552
EP16X154	552
EP16X155	5074A
EP16X156	146A
EP16X167	5009A
EP25	159
EP35	193
EP36X12	138A
EP57X1	116
EP57X2	505
EP57X3	513
EP57X4	552
EP57X5	552
EP57X9	506
EP57X10	552
EP57X11	581
EP57X12	116
EP57X54	116
EP62X41	522
EP62X61	522
EP62X78	HVD-4
EP84X1	749
EP84X2	712
EP84X4	783
EP84X5	783
EP84X6	712
EP84X8	749
EP84X11	7420
EP84X12	738
EP84X19	74123
EP84X34	1545
EP84X37	815
EP84X60	1437
EP84X62	1585
EP84X80	1430
EP84X81	1231
EP84X82	852
EP84X84	4011B
EP84X87	4014B
EP84X88	4040B
EP84X100	1591
EP84X110	4511B
EP84X111	4019B
EP84X119	987
EP84X213	1483
EP84X215	1471
EP84X216	1616
EP84X217	966
EP84X221	1650
EP84X250	15045
EP100	186
EP101A	187
EP162	5075A
EP200	116
EP400	116
EP564H-2	504
EP600	116
EP800	125
EP1000	125
EP1259	116
EP1259-2	116
EP1428-2H	116
EP2437	270
EP2438	271
EP2570	392
EP2798	177
EP 3024	291
EP 3053	152
EP3053	152
EP3149	116
EP5641H2	504
EP5641H-2	504
EP-100	152
EP-101A	151A
EP-276	196
EP-421	153
EP-422	152
EP-637	190
EP-797	152
EP-801	152
EP-802	153
EP-943	153
EP-944	152
EP-976	189
EP-1428-2H	116
EP-2798	113A
EP-3572	113A
EP-3641-1	503
EP-5619-2/7628	116
EP-5641-1	503
EPB22-15	506
EPX2	123AP
EPX5X105	375
EPX15X17	159
EPX59	519
EPX68	145A
EPY62	3032
EPY62-1	3032
EPY62-2	3032
EQA0106R	5011A
EQA0106T	5013A
EQA0107	5014A
EQA0108	5015A
EQA0108R	5015A
EQA0205	5010A
EQA0205A	5010A
EQA0205B	5010A
EQA0206	5012A
EQA0206C	5013A
EQA0207	5014A
EQA0207D	5015A
EQA0209CD	5018A
EQA0210A	5019A
EQA0210B	5019A
EQA0210C	5019A
EQA0210D	5019A
EQA0220	5029A
EQA0305B	5010A
EQA0306C	5012A
EQA0309A	5017A
EQA01-01	139A
EQA01-05	135A
EQA01-05S	5010A
EQA01-05T	136A
EQA01-06	5012A
EQA01-06R	5011A
EQA01-06S	5012A
EQA01-06S13	5012A
EQA01-06SB	5012A
EQA01-06SC	5012A
EQA01-06T	5013A
EQA01-06TV	5012A
EQA01-07	5014A
EQA01-07R	5071A
EQA01-07R2	5014A
EQA01-07RE	5014A
EQA01-07S	5014A
EQA01-08	5015A
EQA01-08R	5015A
EQA01-08S	5016A
EQA01-09	139A
EQA01-09(R)	139A
EQA01-09C	5018A
EQA01-09R	139A
EQA01-09S	5018A
EQA01-09S1	5018A
EQA01-067	137A
EQA01-10	5019A
EQA01-10R	5019A
EQA01-10R2	5019A
EQA01-10S	140A
EQA01-11	5020A
EQA01-11S	5020A
EQA01-11SE	5020A
EQA01-11SV	5020A
EQA01-11Z	5074A
EQA01-12	5021A
EQA01-12R	5021A
EQA01-12S	5021A
EQA01-12S1	5021A
EQA01-12SI	5021A
EQA01-12Z	142A
EQA01-13	5022A
EQA01-13R	5022A
EQA01-14	5023A
EQA01-14R	144A
EQA01-14RD	144A
EQA01-15	5024A
EQA01-15LV	5024A
EQA01-15R	5024A
EQA01-15RL	5024A
EQA01-15RLV	5024A
EQA01-16	5025A
EQA01-17	5026A
EQA01-17R	5076A
EQA01-18	5027A
EQA01-18A	5027A
EQA01-20	5029A
EQA01-20RB	5079A
EQA01-21	5080A
EQA01-21R	5079A
EQA01-22	5030A
EQA01-24	5081A
EQA01-24RR	5081A
EQA01-25	5082A
EQA01-26	146A
EQA01-28	5083A
EQA01-28R2	5034A
EQA01-30	5084A
EQA01-32	5035A
EQA01-32R	147A
EQA01-33	5036A
EQA01-33RE	5036A
EQA01-33RF	5036A
EQA01-35	5037A
EQA01-35R	5037A
EQA01-35RC	5037A
EQA01-115	5074A
EQA01-1251	5021A
EQA01-Z4RA	5084A
EQA02-05	5010A
EQA02-05-A	5010A
EQA02-05-B	5010A
EQA02-05-D	5010A
EQA02-05A	5009A
EQA02-05AB	5009A
EQA02-05B	5009A
EQA02-05C	5010A
EQA02-05CD	5010A
EQA02-05CDB	5010A
EQA02-05D	5010A
EQA02-05F	5010A
EQA02-05M1	5010A
EQA02-05MI	5010A
EQA02-06	5012A
EQA02-06(A)	5011A
EQA02-06(B)	5011A
EQA02-06-A	5011A
EQA02-06-AB	5011A
EQA02-06-B	5011A
EQA02-06A	5011A
EQA02-06AB	5011A
EQA02-06B	5011A
EQA02-06C	5012A
EQA02-06CD	5012A
EQA02-06D	5013A
EQA02-06D-TAPG	5012A
EQA02-06E	5013A
EQA02-06F	5013A
EQA02-06M6	5012A
EQA02-07	5014A
EQA02-07A	5014A
EQA02-07ABD	5014A
EQA02-07B	5014A
EQA02-07C	5014A
EQA02-07CD	5014A
EQA02-07CDA	5015A
EQA02-07D	5015A
EQA02-07M6	5014A
EQA02-08A	5015A
EQA02-08B	5015A
EQA02-08C	5016A
EQA02-08CD	5016A
EQA02-08D	5016A
EQA02-08M3	5016A
EQA02-08S3	5016A
EQA02-09(C)	5018A
EQA02-09(D)	5018A
EQA02-09-C0	5018A
EQA02-09-CD	5018A
EQA02-09A	5018A
EQA02-09AV	5018A
EQA02-09B	5018A
EQA02-09C	5018A
EQA02-09CD	5018A
EQA02-09D	5018A
EQA02-0853	5016A
EQA02-10	5019A
EQA02-10(A)	5019A
EQA02-10(B)	5019A
EQA02-10-A	5019A
EQA02-10-B	5019A
EQA02-10-C	5019A
EQA02-10-CD	5019A
EQA02-10-D	5019A
EQA02-10A	5019A
EQA02-10AB	5019A
EQA02-10B	5019A
EQA02-10C	5019A
EQA02-10CD	5019A
EQA02-10CDA	5019A
EQA02-10D	5019A
EQA02-11	5020A
EQA02-11A	5020A
EQA02-11B	5021A
EQA02-11C	5021A
EQA02-11CD	5021A
EQA02-11CDB	5021A
EQA02-11D	5020A
EQA02-12A	5022A
EQA02-12AB	5022A
EQA02-12B	5022A
EQA02-12M1	5021A
EQA02-13	5022A
EQA02-13-A	5022A
EQA02-13-B	5022A
EQA02-13A	5022A
EQA02-13B	5022A
EQA02-14	5023A
EQA02-14-A	5023A
EQA02-14-AB	5024A
EQA02-14-B	5023A
EQA02-14A	5023A
EQA02-14B	5023A
EQA02-15	5024A
EQA02-15A	5024A
EQA02-15M	5024A
EQA02-16A	5025A
EQA02-18A	5027A
EQA02-20	5029A
EQA02-20B	5029A
EQA02-23ACA	5031A
EQA02-30A	5035A
EQA02-30B	5035A
EQA02-30C	5036A
EQA02-33	5036A
EQA02-33A	5036A
EQA02-33AC	5036A
EQA02-35B	5037A
EQA02-35R3	5037A
EQA03-05B	5010A
EQA03-06C	5012A
EQA03-09A	5017A
EQA03-11A	5020A

PART NUMBER	NTE REPLACEMENT
EQA03-16A	5025A
EQA024B	5023A
EQA0111	5020A
EQA0212AB	5021A
EQA0213	5022A
EQA0213A	5022A
EQA0213B	5022A
EQA0214	5023A
EQA0214A	5023A
EQA0214B	5023A
EQA0311A	5020A
EQA0313B	5013A
EQA01116	5025A
EQA120R	5079A
EQA15-02	5024A
EQA106SE	5070A
EQA107RE	5071A
EQA120R	5079A
EQA1207R	5079A
EQA.9	139A
EQA-02-06D	5012A
EQA-2-08B	5016A
EQA-9	139A
EQA01-11S	552
EQA01-12S1	142A
EQA01-35RC	5037A
EQAQ1-35RC	5143A
EQB01-05	135A
EQB01-06	5070A
EQB01-06V	5070A
EQB01-06Y	5070A
EQB01-07	138A
EQB01-08	5072A
EQB01-09	139A
EQB01-09B	5073A
EQB01-011Z	5074A
EQB01-11	5074A
EQB01-11Q(ZD)	5074A
EQB01-11QV	5074A
EQB01-11R	5074A
EQB01-11V	5074A
EQB01-11Z	5074A
EQB01-12	142A
EQB01-12A	142A
EQB01-12B	142A
EQB01-12BV	142A
EQB01-12M	142A
EQB01-12R	142A
EQB01-12Z	5021A
EQB01-13	5022A
EQB01-14	144A
EQB01-15	145A
EQB01-15M	145A
EQB01-15Z	145A
EQB01-15ZB	145A
EQB01-16	5075A
EQB01-17	5076A
EQB01-18	5077A
EQB01-19	5078A
EQB01-20	5079A
EQB01-21	5080A
EQB01-22	5080A
EQB01-24	5081A
EQB01-24RR	5081A
EQB01-25	5082A
EQB01-26	146A
EQB01-28	5083A
EQB01-30	5084A
EQB01-32	147A
EQB01-33	147A
EQB01-35	5085A
EQB02-08B	5015A
EQB1-12M	142A
EQB01-10	140A
EQC04-02	125
EQF-0009	312
EQF-3	133
EQF-4	132
EQG01-12A	5021A
EQG-6	121
EQG-8	104
EQG-9	102A
EQG-12A	142A
EQG-15	158
EQH-1	103A
EQR01-24RR	5081A
EQR-0016	294
EQR-0038	106
EQR-1	106
EQS131	128
EQS140	152
EQS-0100	229
EQS-0018	229
EQS-0061	199
EQS-0160	235
EQS-0159	236
EQS-0165	123AP
EQS-0184	306
EQS-0192	123AP
EQS-0196	319P
EQS-0198	229
EQS-5	123AP
EQS-9	123AP
EQS-10	199
EQS-11	199
EQS-13	123AP
EQS-18	107
EQS-19	313
EQS-20	313
EQS-21	108
EQS-22	123AP
EQS-56	195A
EQS-57	195A
EQS-60	237
EQS-61	123AP
EQS-62	123AP
EQS-64	123AP
EQS-66	186
EQS-67	186
EQS-78	199
EQS-86	237
EQS-89	186
EQS-100	123AP
EQS-131	199
EQS-139	229
EQS-140	152
EQS-141	236
ER1	116
ER1(ELCOM)	118
ER1B22-15	116
ER2	116
ER5(ELCOM)	120
ER7(ELCOM)	500A
ER9(ELCOM)	513
ER10(ELCOM)	5892
ER10R(ELCOM)	5893
ER11	116
ER11(ELCOM)	5894
ER11R(ELCOM)	5895
ER12	116
ER12(ELCOM)	5896
ER12R(ELCOM)	5897
ER13(ELCOM)	5898
ER13R(ELCOM)	5899
ER14(ELCOM)	5900
ER14R(ELCOM)	5901
ER15(ELCOM)	5902
ER15R(ELCOM)	5903
ER15X4	160
ER15X5	160
ER15X6	160
ER15X7	102A
ER15X9	102A
ER15X10	121
ER15X11	160
ER15X12	160
ER15X13	160
ER15X14	160
ER15X15	160
ER15X16	160
ER15X17	102A
ER15X18	102A
ER15X19	160
ER15X20	160
ER15X21	160
ER15X22	102A
ER15X23	102A
ER15X24	160
ER15X25	160
ER15X26	160
ER16(ELCOM)	5904
ER17(ELCOM)	5908
ER17R(ELCOM)	5909
ER18(ELCOM)	5910
ER18R(ELCOM)	5911
ER20(ELCOM)	5980
ER20R(ELCOM)	5981
ER21	116
ER21(ELCOM)	5982
ER21R(ELCOM)	5983
ER22	116
ER22(ELCOM)	5986
ER22R(ELCOM)	5987
ER23(ELCOM)	5988
ER23R(ELCOM)	5989
ER24(ELCOM)	5990
ER24R(ELCOM)	5991
ER25(ELCOM)	5992
ER25R(ELCOM)	5993
ER26(ELCOM)	5994
ER26R(ELCOM)	5995
ER27(ELCOM)	5998
ER28(ELCOM)	6002
ER28R(ELCOM)	6003
ER31	116
ER32(ELCOM)	500A
ER33(ELCOM)	504
ER34(ELCOM)	505
ER41	116
ER42	116
ER51	116
ER57X2	116
ER57X3	116
ER57X4	116
ER61	116
ER62	116
ER81	125
ER101	116
ER102	117
ER102D	116
ER103D	116
ER103E	116
ER104D	116
ER105D	116
ER106D	116
ER107D	125
ER108D	125
ER181	116
ER182	116
ER183	116
ER184	116
ER185	116
ER186	125
ER187	125
ER201	116
ER301	116
ER308	125
ER310	125
ER381	116
ER401	116
ER410	116
ER501	116
ER510	116
ER601	116
ER801	125
ER824-06	506
ER1001	125
ER1400	2800
ERA0106R	136A
ERA01-35RC	5143A
ERA15-01	552
ERA15-01V3	552
ERA15-02	552
ERA15-02V3	116
ERA18-02	552
ERA18-04	552
ERA22-02	116
ERA22-04	116
ERA22-04V	116
ERA22-04V3	116
ERA38-04	116
ERA48-04	552
ERA81-004	552
ERA81-004G	585
ERA82-004	552
ERA84-009	578
ERA1501	552
ERA1502	552
ERA2202	552
ERA2204	552
ERA81004	552
ERA81004G	552
ERB01-01	116
ERB01-05	135A
ERB01-07	5071A
ERB01-10	125
ERB02-10	506
ERB02-12	506
ERB06-15V	558
ERB0615V	558
ERB11-01	116
ERB12-01	552
ERB12-01G	116
ERB12-01R	116
ERB12-01RK	552
ERB12-01U4	116
ERB12-01V	116
ERB12-02	552
ERB12-02RK	116
ERB12-02V	125
ERB12-04	116
ERB12-04RK	116
ERB12-06	125
ERB12-10	125
ERB12-11	116
ERB15	116
ERB16-08	125
ERB16-12	558
ERB21-10	506
ERB21-12	506
ERB21-15	506
ERB22-10	506
ERB22-12	506
ERB22-15	116
ERB24	116
ERB24(GE)	116
ERB24-02B	116
ERB24-02D	552
ERB24-04	552
ERB24-04A	506
ERB24-04B	506
ERB24-04C	552
ERB24-04CV	552
ERB24-04D	552
ERB24-06	552
ERB24-06A	116
ERB24-06B	552
ERB24-06C	552
ERB24-06D	506
ERB26-15	525
ERB26-20	525
ERB26-20L	525
ERB26-20M	525
ERB26-20MV	525
ERB28-02	552
ERB28-04	552
ERB28-04B	552
ERB28-04C	552
ERB28-04CV	552
ERB28-04D	552
ERB28-04DV	552
ERB28-06DV	552
ERB29-04	552
ERB30-15	506
ERB43	552
ERB43-02	552
ERB43-04	552
ERB43-04G	552
ERB43-04V	552
ERB43-08	558
ERB44-04	552
ERB44-04V	552
ERB44-06	552
ERB44-6	552
ERB44-10	125
ERB47-02	116
ERB81	125
ERB81-004	586
ERB83-004	586
ERB84-009	579
ERB91-02	587
ERB93-02	588
ERB430V	552
ERB1201	125
ERB1202	125
ERB2404C	552
ERB2406A	116
ERB2406D	552
ERB2802	552
ERB4302	552
ERB4304	552
ERB4304G	552
ERB4304V	552
ERB4404V	552
ERB4702	116
ERB81004	586
ERB-07RE	5071A
ERB-6.2EB2	5013A
ERB-12-01	116
ERB-12-01RK	116
ERB-12-02	116
ERB-24-04C	552
ERB-24-04D	552
ERB-24-06A	116
ERB-28-04D	552
ERB-81	586
ERC0402	125
ERC0402E3	125
ERC0508	125
ERC0508V	125
ERC0510	125
ERC0510V	125
ERC0S10	125
ERC01-02	125
ERC01-02F	125
ERC01-02FL	580
ERC01-02FL12	125
ERC01-02L	125
ERC01-02L12	125
ERC01-04	125
ERC01-04F	156
ERC01-06	125
ERC01-10	156
ERC03-01	5916
ERC03-03	5920
ERC04-02	125
ERC04-02E3	125
ERC04-02F	580
ERC04-04	125
ERC04-04C	125
ERC04-04F	125
ERC04-06	580
ERC04-6	125
ERC04-10	125
ERC05-06	125
ERC05-08	515
ERC05-08V	125
ERC05-10	125
ERC06-15L	558
ERC06-15S	525
ERC0615	525
ERC12-08	125
ERC13-08	125
ERC16-06	156
ERC16-10	156
ERC16-12	506
ERC20-04	581
ERC24-04	552
ERC24-06	552
ERC24-06S	552
ERC25-04	552
ERC25-06S	552
ERC26-13L	525
ERC26-15S	506
ERC26-15T	506
ERC26-131	506
ERC27-13	506
ERC35-02	580
ERC38-06	577
ERC44-04	552
ERC47-02	580
ERC81-004	580
ERC84-009	579
ERC91-02	588
ERC1208	125
ERC1308	125
ERC4702	580
ERC81004	156
ERC-01-02	125
ERCC4-06	125
ERC01-10	156
ERC04-06	125
ERC0510	125
ERC0-06	125
ERCOS10	125
ERD03-02	156
ERD03-04	156
ERD07-15	551
ERD07-15L	506
ERD0715	551
ERD24-005	5912
ERD24-01	5916
ERD24-02	5916
ERD24-06D	552
ERD28-04S	580
ERD28-08	506
ERD28-08S	506
ERD29-02H3	580
ERD29-04	580
ERD29-06	580
ERD29-08J	515
ERD47-02	580
ERD74-005	5912
ERD74-01	5916
ERD74-02	5916
ERD81-004	6084
ERD300	116
ERD400	116
ERD700	125
ERD800	125
ERD900	125
ERD1000	125
ERD2902H3	580
ERD2904	552
ERD2908J	506
ERE81-004	6094
ERG81-004	6094
ERG81A-004	6094
ERM12-02	125
ERS100	128
ERS120	128
ERS140	154
ERS160	154
ERS180	154
ERS200	154
ERS225	154
ERS250	154
ERS275	154
ERS301	154
ERS325	154
ERS350	198
ERS375	198
ERS401	198
ERS425	198
ERS450	198
ERS475	198
ERV-02F2150	116
ERZ-C07DK121	1V075
ERZ-C07DK151	1V095
ERZ-C07DK201	1V130
ERZ-C07DK241	1V150
ERZ-C07DK390	1V025
ERZ-C07DK391	1V250
ERZ-C07DK431	1V275
ERZ-C07DK470	1V030
ERZ-C07DK471	1V300
ERZ-C10DK241	2V150
ERZ-C14DK121	2V075
ERZ-C14DK151	2V095
ERZ-C14DK201	2V130
ERZ-C14DK220	2V014
ERZ-C14DK241	2V150
ERZ-C14DK270	2V017
ERZ-C14DK330	2V020
ERZ-C14DK390	2V025
ERZ-C14DK391	2V150
ERZ-C14DK431	2V275
ERZ-C14DK470	2V030
ERZ-C14DK471	2V300
ERZ-C14DK480	1V040
ERZ-C14DK560	2V035
ERZ-C14DK680	2V040
ERZ-C14DK681	2V420
ERZ-C20DK241	524V15
ERZ-C20DK391	524V25
ERZ-C20DK431	524V27
ERZ-C20DK471	524V30
ERZ-C20DK681	524V42
ERZC03DK220S	1V014
ERZC10DK24	2V150
ERZC10DK241U	2V150
ERZC10ZK241U	2V150
ERZC100K241	2V150
ERZC100K241U	2V150
ES01	551
ES01V	551
ES0136CE	5085A
ES1	552
ES1(ELCOM)	160
ES1A	551
ES1F	558
ES1F-V1	580
ES1KX122	229
ES1V	552
ES1Z	552
ES2(ELCOM)	102A
ES3	126
ES3(ELCOM)	102A
ES4(ELCOM)	158
ES5	101
ES5(ELCOM)	103A
ES6(ELCOM)	103A
ES7	104
ES7(ELCOM)	131
ES8(ELCOM)	160
ES9	104
ES9(ELCOM)	104
ES10	105
ES10(ELCOM)	105
ES11(ELCOM)	160
ES13	104
ES13(ELCOM)	104
ES14	126
ES14(ELCOM)	160
ES15(ELCOM)	160
ES15X1	123AP
ES15X2	108
ES15X3	108
ES15X4	102A
ES15X6	108
ES15X7	123AP
ES15X8	102A
ES15X9	159
ES15X10	108
ES15X11	123AP
ES15X12	123AP
ES15X14	123AP
ES15X16	123AP
ES15X17	121
ES15X18	108
ES15X19	108
ES15X20	123AP
ES15X22	233
ES15X23	123AP
ES15X24	123AP
ES15X30	108
ES15X31	102A
ES15X32	102A
ES15X37	123AP
ES15X42	123AP
ES15X43	121
ES15X45	104
ES15X48	103A
ES15X49	102A
ES15X50	102A
ES15X51	104
ES15X52	127
ES15X53	102A
ES15X54	127
ES15X55	102A
ES15X56	161
ES15X57	161
ES15X58	123AP
ES15X59	154
ES15X60	108
ES15X61	126
ES15X62	123AP
ES15X63	102A
ES15X64	123AP
ES15X65	161
ES15X66	107
ES15X67	107
ES15X68	123AP
ES15X69	108
ES15X70	123AP
ES15X71	103A
ES15X72	102A
ES15X73	126
ES15X74	103A
ES15X75	158
ES15X76	123AP
ES15X77	127
ES15X78	104
ES15X79	161
ES15X80	107
ES15X81	107
ES15X82	107
ES15X83	123AP
ES15X84	123AP
ES15X85	123AP
ES15X86	152
ES15X87	161
ES15X88	161
ES15X89	154
ES15X90	290A
ES15X91	228A
ES15X92	132
ES15X93	128
ES15X94	165
ES15X95	124
ES15X96	161
ES15X97	107
ES15X98	175
ES15X99	158
ES15X100	102A
ES15X101	159
ES15X102	107
ES15X104	161
ES15X105	161
ES15X106	233
ES15X107	154
ES15X119	161
ES15X120	107
ES15X121	107
ES15X122	161
ES15X123	161
ES15X125	375
ES15X126	163A
ES15X127	233
ES15X128	159
ES16(ELCOM)	130
ES16X2	109
ES16X3	109
ES16X4	177
ES16X5	109
ES16X6	109
ES16X7	109
ES16X9	116
ES16X10	174
ES16X12	109
ES16X13	116
ES16X14	109
ES16X15	174
ES16X16	506
ES16X20	506
ES16X21	110MP
ES16X23	177
ES16X24	177
ES16X25	116
ES16X27	519
ES16X28	506
ES16X29	5080A
ES16X30	177
ES16X31	506
ES16X32	177
ES16X33	156
ES16X38	116
ES16X40	177
ES16X41	5079A
ES16X70	110MP
ES16X103	109
ES17(ELCOM)	102A
ES18	121
ES18(ELCOM)	104
ES19	102A
ES19(ELCOM)	160
ES20(ELCOM)	123AP
ES21	105
ES21(ELCOM)	121
ES22(ELCOM)	128
ES23	102A
ES23(ELCOM)	160
ES24(ELCOM)	124
ES25	100
ES25(ELCOM)	160
ES26	100
ES26(ELCOM)	102A
ES27(ELCOM)	179
ES28(ELCOM)	155
ES29(ELCOM)	131
ES30(ELCOM)(NPN)	103A
ES30(ELCOM)(PNP)	102A
ES31(ELCOM)	130
ES32(ELCOM)	154
ES33(ELCOM)	162
ES34(ELCOM)	159
ES35(ELCOM)	130MP
ES36(ELCOM)	175
ES36X103	109
ES37(ELCOM)	158
ES38(ELCOM)	103A
ES39(ELCOM)	157
ES40(ELCOM)	194
ES41	126
ES41(ELCOM)	160
ES42(ELCOM)	127
ES43(ELCOM)	181
ES44(ELCOM)	175
ES45(ELCOM)	175
ES46	123
ES46(ELCOM)	123AP
ES47(ELCOM)	6400
ES47X1	116
ES47X4	116
ES49(ELCOM)	218
ES50(ELCOM)	131
ES51	116
ES51(ELCOM)	129
ES51X65	128
ES53(ELCOM)	123AP
ES54(ELCOM)	161
ES55(ELCOM)	162
ES56(ELCOM)	128
ES57(ELCOM)	128
ES57X1	116
ES57X2	116
ES57X4	116
ES57X5	116
ES57X6	113A
ES57X7	138A
ES57X8	506
ES57X9	506
ES57X11	505
ES57X12	177
ES57X13	503
ES57X14	167
ES57X20	503
ES57X21	503
ES58	184
ES58(ELCOM)	184
ES59(ELCOM)	179
ES60(ELCOM)	185
ES61(ELCOM)	226
ES62(ELCOM)	128
ES63(ELCOM)	176
ES64(ELCOM)	219
ES65(ELCOM)	159
ES66(ELCOM)	182
ES67(ELCOM)	183
ES68(ELCOM)	185
ES71(ELCOM)	162
ES73(ELCOM)	161
ES74(ELCOM)	180
ES75(ELCOM)	172A
ES75X1	712
ES76(ELCOM)	171
ES80(ELCOM)	152
ES81	189
ES81(ELCOM)	153
ES82(ELCOM)	188
ES83(ELCOM)	189
ES84	163A
ES84(ELCOM)	163A
ES84X3	712
ES84X6	712
ES85(ELCOM)	123AP
ES86(ELCOM)	161
ES89	171
ES89(ELCOM)	171
ES90	219
ES90(ELCOM)	219
ES91(ELCOM)	176
ES92	257
ES94	225
ES94(ELCOM)	225
ES95	165
ES95(ELCOM)	165
ES96	191
ES96(ELCOM)	191
ES97	194
ES97(ELCOM)	194
ES103	196
ES104	197
ES105	253
ES106	254
ES107	232
ES108	243
ES109	244

PART NUMBER	NTE REPLACEMENT
ES112	234
ES113	241
ES114	242
ES501	105
ES501(ELCOM)	105
ES503	121
ES503(ELCOM)	104
ES1513	503
ES1627	177
ES3110	126
ES3111	126
ES3112	126
ES3113	126
ES3114	126
ES3115	126
ES3116	126
ES3120	102A
ES3121	102A
ES3122	102A
ES3123	102A
ES3124	102A
ES3125	102A
ES3126	102A
ES3266	108
ES4053	722
ES10110	131
ES10186	107
ES10187	108
ES10188	107
ES10189	109
ES10190	614
ES10222	123AP
ES10223	123AP
ES10224	109
ES10225	109
ES10231	199
ES10232	123AP
ES10233	116
ES10234	142A
ES15046	107
ES15047	107
ES15048	123AP
ES15049	199
ES15050	123AP
ES15051	187
ES15052	199
ES15054	109
ES15055	614
ES15056	116
ES15057	177
ES15102	107
ES15226	128
ES15227	186
ES-1	552
ES-1A	551
ES-1V	552
ES-16X16	506
ES-48	124
ES-88	195A
ES-923933-1	149A
ESA01-15	5021T1
ESA06	116
ESA10-98	116
ESA10-99	116
ESA10N	116
ESA213	126
ESA233	126
ESA-06	116
ESA-10C	116
ESA-10N	116
ESAB33-02CS	6240
ESAB92-02	6240
ESAB92M-02	6085
ESAC25-02C	6240
ESAC25-02N	6244
ESAC31-01C	6240
ESAC31-01N	6244
ESAC31-02C	6240
ESAC31-02N	6244
ESAC33-02C	6240
ESAC33-02CS	6240
ESAC33-02N	6244
ESAC82-004	6085
ESAC83-004K	6090
ESAC92-02	6240
ESAC93-02	6246
ESAD25-02C	6246
ESAD33-02C	6246
ESAD75-005	6206
ESAD75-01	6206
ESAD75-02	6206
ESAD83-004	6090
ESAD83-004K	6090
ESD918964P	128
ESI-LA1111P	1002
ESI-UPC30C	1049
ESI-UPC1020H	1160
ESK1	116
ESK1/02	116
ESK1/06	116
ESK-1	116
ESKE40C500	116
ESKE125C500	125
ESM1350	746
ESPA11-40	513
ESPA91	568A
ESPA98	568
ESPA-91	568A
ESQ-141	236
ET1	160
ET2	160
ET3	102
ET4	102
ET5	102
ET6	104
ET7	105
ET8	101
ET9	101
ET10	103
ET11	103
ET12	126
ET15X1	102A
ET15X2	107
ET15X3	107
ET15X4	121
ET15X5	121
ET15X7	108
ET15X8	128
ET15X9	108
ET15X10	123AP
ET15X11	123AP
ET15X12	123AP
ET15X13	123AP
ET15X14	123AP
ET15X15	123AP
ET15X16	123AP
ET15X17	121
ET15X18	108
ET15X19	108
ET15X20	123AP
ET15X21	108
ET15X23	108
ET15X24	123AP
ET15X25	102A
ET15X26	127
ET15X27	123AP
ET15X29	160
ET15X30	108
ET15X31	102A
ET15X32	102A
ET15X33	129
ET15X34	154
ET15X36	128
ET15X37	123AP
ET15X38	129
ET15X39	129
ET15X40	127
ET15X41	123AP
ET15X42	123AP
ET15X43	121
ET15X45	123AP
ET15X54	123AP
ET16X1	109
ET16X6	112
ET16X7	113A
ET16X10	113A
ET16X11	113A
ET16X13	112
ET16X14	112
ET16X15	142A
ET16X16	116
ET16X16X	117
ET16X17	136A
ET16X19	109
ET16X20	109
ET16X21	109
ET41X37	109
ET51X25	116
ET52X25	116
ET55-25	116
ET55X25	116
ET55X29	116
ET57X25	116
ET57X26	120
ET57X29	116
ET57X30	116
ET57X32	118
ET57X33	116
ET57X35	116
ET57X38	116
ET57X39	506
ET57X40	506
ET58X32	118
ET200	116
ET400	116
ET600	116
ET670	176
ET1511	102A
ET2764	2764
ET2764-2	2764
ET2764-3	2764
ET2764-4	2764
ET35035	234
ET234843	123AP
ET234854	289
ET238894	123AP
ET329218	289
ET350335	234
ET352146	289
ET368021	123AP
ET379262	199
ET379462	199
ET380834	199
ET392927	210
ET398711	199
ET398777	199
ET412626	123AP
ET453611	186A
ET491051	133
ET495371	186
ET517263	199
ET517375	235
ET517994	199
ET539122	294
ETD1S2788	177
ETD-1N60	109
ETD-10D1	116
ETD-10D2	116
ETD-HZ7C	5071A
ETD-RD9.1FB	139A
ETD-RD75	138A
ETD-SD46	109
ETD-SG9150	177
ETD-V06C	116
ETDCDG21	177
ETI-21	1002
ETI-22	801
ETI-23	1155
ETP2008	154
ETP3114	190
ETP3923	154
ETP5092	198
ETP5095	198
ETS014A	123AP
ETS-001	213
ETS-003	130
ETS-070	128
ETS-017	175
ETS-068	123AP
ETS-069	129
ETS-071	129
ETT-CDC-12000	123AP
ETTB-2SB176	102A
ETTB-2SB176A	102A
ETTB-2SB176B	102A
ETTB-2SB176R	102A
ETTB-75LB	102A
ETTB-367B	131
ETTC-CD8000	123AP
ETTC-CD12000	123AP
ETTC-CD13000	123AP
ETTC-2SC490	175
ETTC-458LG	123AP
ETTC-930D	229
ETTC-945	199
ETTD-235	152
ETX18	123AP
EU01	552
EU01A	552
EU02A	552
EU1	552
EU1A	552
EU1Z	552
EU1ZV1	552
EU2	552
EU2A	552
EU2V	552
EU2Z	552
EU2ZV	552
EU15X1	108
EU15X2	108
EU15X3	108
EU15X4	112
EU15X6	108
EU15X27	128
EU15X34	128
EU16X1	109
EU16X2	109
EU16X4	112
EU16X7	116
EU16X11	177
EU16X14	112
EU16X19	110MP
EU16X20	506
EU30X87	614
EU57X30	116
EU57X32	118
EU57X38	120
EU57X40	116
EU-1	552
EU-1A	552
EU-1AV	552
EU-1V	552
EU-1Z	552
EU-2	552
EU-2V	552
EUZ	552
EV2V	552
EV16X11	177
EV16X20	506
EV-1	552
EV-2	552
EVD-3	177
EVM511	116
EVR4	136A
EVR4A	136A
EVR4B	136A
EVR5	137A
EVR5A	137A
EVR5B	137A
EVR9	139A
EVR9A	139A
EVR9B	139A
EVR11	141A
EVR11A	141A
EVR11B	141A
EVR12	142A
EVR12A	142A
EVR12B	142A
EVR15	145A
EVR15A	145A
EVR15B	145A
EVR27	146A
EVR27A	146A
EVR27B	146A
EVR56	148A
EVR56A	148A
EVR56B	148A
EVR82	150A
EVR82A	150A
EVR82B	150A
EVR110	151A
EVR110A	151A
EVR110B	151A
EVS-K112C	113A
EW14X18	605A
EW14X232	2V150
EW14X486	2V150
EW15X6	289A
EW15X19	107
EW15X20	382
EW15X21	85
EW15X22	290A
EW15X23	85
EW15X24	379
EW15X25	85
EW15X26	153
EW15X27	290A
EW15X30	85
EW15X31	373
EW15X32	85
EW15X33	184
EW15X42	85
EW15X44	290A
EW15X51	399
EW15X55	159
EW15X57	123AP
EW15X58	152
EW15X59	153
EW15X63	123AP
EW15X64	198
EW15X66	85
EW15X67	89
EW15X70	289A
EW15X71	373
EW15X78	107
EW15X106	172A
EW15X108	56
EW15X110	85
EW15X130	16
EW15X135	17
EW15X139	184
EW15X144	290A
EW15X148	290A
EW15X151	383
EW15X152	21
EW15X154	15
EW15X156	2357
EW15X158	16
EW15X159	5016A
EW15X160	18
EW15X165	293
EW15X168	19
EW15X171	16
EW15X172	16
EW15X178	19
EW15X183	16
EW15X187	15
EW15X188	315
EW15X190	19
EW15X199	18
EW15X206	16
EW15X215	19
EW15X219	18
EW15X223	290A
EW15X224	107
EW15X225	152
EW15X226	85
EW15X231	107
EW15X232	382
EW15X233	294
EW15X234	289A
EW15X235	377
EW15X237	153
EW15X238	373
EW15X240	290A
EW15X241	196
EW15X242	399
EW15X243	319P
EW15X244	459
EW15X254	85
EW15X258	91
EW15X260	19
EW15X262	377
EW15X267	2357
EW15X268	13
EW15X269	2358
EW15X276	17
EW15X278	377
EW15X279	19
EW15X285	21
EW15X286	16
EW15X292	16006
EW15X310	198
EW15X315	16
EW15X316	16
EW15X317	18
EW15X320	377
EW15X322	294
EW15X327	399
EW15X328	152
EW15X329	19
EW15X330	389
EW15X341	12
EW15X342	16
EW15X343	16001
EW15X344	379
EW15X345	379
EW15X346	377
EW15X359	399
EW15X360	16
EW15X363	293
EW15X366	2356
EW15X367	2360
EW15X368	2355
EW15X369	2359
EW15X370	2356
EW15X372	2355
EW15X374	19
EW15X375	19
EW15X376	374
EW15X377	378
EW15X378	51
EW15X379	20
EW15X383	290A
EW15X406	377
EW15X413	377
EW15X415	377
EW15X421	2358
EW15X428	16
EW15X433	20
EW15X450	85
EW15X457	19
EW15X487	290A
EW15X520	375
EW15X521	85
EW15X522	85
EW15X523	399
EW15X524	2302
EW15X525	2357
EW15X526	2356
EW15X529	2359
EW15X549	199
EW15X564	378
EW15X566	85
EW15X567	379
EW15X568	107
EW15X570	15020
EW15X571	399
EW15X572	290A
EW15X573	399
EW15X574	289A
EW15X576	289A
EW15X577	289A
EW15X578	290A
EW15X579	2302
EW15X580	375
EW15X581	289A
EW15X582	289A
EW15X583	289A
EW15X584	382
EW15X585	289A
EW15X588	107
EW15X589	399
EW15X590	184
EW15X591	261
EW15X592	157
EW15X593	89
EW15X594	5424
EW15X596	293
EW15X597	85
EW15X598	199
EW15X619	152
EW15X620	399
EW15X628	399
EW15X629	2300
EW15X634	157
EW15X635	2302
EW16X9	555
EW16X10	519
EW16X11	552
EW16X12	552
EW16X13	5013A
EW16X14	5089A
EW16X17	614
EW16X19	601
EW16X21	5015A
EW16X22	116
EW16X26	5313
EW16X36	552
EW16X39	5013A
EW16X59	116
EW16X76	519
EW16X82	5002A
EW16X92	552
EW16X93	586
EW16X97	5011A
EW16X98	116
EW16X102	519
EW16X105	116
EW16X106	519
EW16X109	519
EW16X110	519
EW16X111	519
EW16X114	5015A
EW16X116	5020A
EW16X118	5029A
EW16X121	552
EW16X124	137A
EW16X135	116
EW16X159	5016A
EW16X160	5024A
EW16X165	605A
EW16X167	5009A
EW16X169	519
EW16X171	5005A
EW16X175	552
EW16X176	605A
EW16X189	109
EW16X190	5003A
EW16X193	519
EW16X194	109
EW16X196	552
EW16X197	5006A
EW16X200	116
EW16X202	125
EW16X204	5011A
EW16X205	5018A
EW16X206	5025A
EW16X207	5030A
EW16X209	156
EW16X218	109
EW16X221	552
EW16X223	5010A
EW16X224	5011A
EW16X226	519
EW16X227	519
EW16X231	519
EW16X232	519
EW16X234	5013A
EW16X237	5022A
EW16X238	5033A
EW16X242	5020A
EW16X243	5022A
EW16X245	5080A
EW16X248	5010A
EW16X249	5021T1
EW16X251	5014A
EW16X253	5027A
EW16X254	5035A
EW16X255	5009A
EW16X257	519
EW16X258	5077A
EW16X259	5072A
EW16X260	5016A
EW16X261	5015A
EW16X264	5016A
EW16X265	5033A
EW16X292	519
EW16X296	5009A
EW16X297	5084A
EW16X298	5014A
EW16X300	5022A
EW16X301	5024A
EW16X302	5015A
EW16X303	519
EW16X304	112
EW16X305	519
EW16X306	116
EW16X307	5071A
EW16X308	552
EW16X309	552
EW16X310	5020A
EW16X311	109
EW16X312	552
EW16X313	125
EW16X314	519
EW16X321	551
EW16X323	580
EW16X324	5069A
EW16X325	519
EW16X326	552
EW16X327	605A
EW16X328	5014A
EW16X329	5019A
EW16X330	5021A
EW16X331	5022A
EW16X332	552
EW16X334	168
EW16X337	552
EW16X338	125
EW16X343	5009A
EW16X352	552
EW16X354	552
EW16X363	552
EW16X365	519
EW16X366	5011A
EW16X367	5014A
EW16X368	5023A
EW16X370	5021A
EW16X371	519
EW16X372	5025A
EW16X373	6240
EW16X374	5019A
EW16X375	5019A
EW16X376	5018A
EW16X377	5314
EW16X378	5015A
EW16X381	615
EW16X391	5013A
EW16X395	5018A
EW16X397	5018A
EW16X407	5020A
EW16X408	580
EW16X409	5010A
EW16X415	5022A
EW16X437	605A
EW16X482	519
EW16X484	552
EW16X485	552
EW16X486	116
EW16X487	142A
EW16X488	580
EW16X489	6246
EW16X490	519
EW16X491	5030A
EW16X526	519
EW16X527	611
EW16X529	558
EW16X530	116
EW16X531	580
EW16X532	5007A
EW16X533	5010A
EW16X535	5021A
EW16X537	5014A
EW16X538	5019A
EW16X540	125
EW16X541	552
EW16X542	116
EW16X543	5012A
EW16X544	144A
EW16X545	5304
EW16X547	5004A
EW16X548	519
EW16X550	555
EW16X551	5009A
EW16X553	5019A
EW16X554	116
EW16X555	506
EW16X556	5012A
EW16X557	5016A
EW16X558	5036A
EW16X559	552
EW16X560	552
EW16X561	145A
EW16X562	5020A
EW16X563	125
EW16X564	5010A
EW16X566	5035A
EW16X567	5021A
EW16X583	519
EW16X584	5332
EW16X585	5019T1
EW16X586	5014A
EW16X587	5015A
EW16X589	506
EW16X590	5012A
EW16X595	580
EW16X596	5022A
EW16X597	5013T1
EW16X598	5070A
EW16X600	552
EW16X601	515
EW16X605	552
EW16X606	5012A
EW16X607	5017A
EW16X608	5020A
EW16X610	558
EW16X611	5010A
EW16X612	552
EW16X615	5018A
EW16X619	5015A
EW16X620	552
EW16X622	125
EW16X651	146A
EW16X656	5033A
EW16X658	125
EW16X712	558
EW24X317	1812
EW24X446	15030
EW41X184	3024
EW41X397	30001
EW57X1	116
EW57X2	116
EW84X12	615P
EW84X15	1657
EW84X18	1515
EW84X30	4017B
EW84X60	15004
EW84X114	712
EW84X115	1522
EW84X156	834
EW84X172	4503B
EW84X192	778A
EW84X196	943M
EW84X217	1234
EW84X224	928S
EW84X232	928M
EW84X233	928M
EW84X239	1689
EW84X252	1630
EW84X267	15003
EW84X268	712
EW84X269	1628
EW84X270	1416
EW84X296	1628
EW84X310	1474
EW84X312	1712
EW84X314	1711
EW84X315	1688
EW84X319	1828
EW84X320	1811
EW84X322	1829
EW84X323	15005
EW84X327	15013
EW84X352	15005
EW84X355	1833
EW84X370	1729
EW84X372	834
EW84X375	1713
EW84X381	1809
EW84X385	1715
EW84X394	1415
EW84X416	1409
EW84X422	1551
EW84X423	1663
EW84X424	1295
EW84X425	1726
EW84X426	1674
EW84X427	1546
EW84X431	615P
EW84X440	1805
EW84X442	1808
EW84X443	1809
EW84X444	1810
EW84X445	1813
EW84X446	1814
EW84X451	15013
EW84X453	960
EW84X464	4027B
EW84X470	4052B
EW84X480	1744
EW84X481	1689
EW84X483	778A
EW84X486	1609
EW84X487	1135
EW84X488	778A
EW84X496	4066B

PART NUMBER	NTE REPLACEMENT
EW84X498	15027
EW84X499	1529
EW84X526	968
EW84X595	15045
EW84X624	15005
EW84X738	1704
EW84X744	15043
EW84X747	966
EW84X756	4069
EW84X761	1805
EW84X763	1834
EW84X767	1810
EW84X782	1650
EW84X783	15018
EW84X785	941M
EW84X788	778A
EW84X793	1217
EW84X794	15044
EW84X810	1837
EW84X863	4013B
EW84X865	778A
EW84X888	1658
EW84X899	1545
EW84X900	1547
EW84X901	712
EW84X906	15001
EW84X910	1673
EW84X911	1827
EW84X913	1663
EW84X914	1683
EW84X976	15029
EW84X977	7014
EW84X978	1373
EW84X1008	1789
EW84X1009	1727
EW84X1010	15032
EW84Z316	15030
EW162	108
EW163	107
EW164	107
EW165	107
EW165V	123AP
EW166	109
EW167	109
EW168	110MP
EW169	156
EW169B	116
EW181	123AP
EW182	123AP
EW183	153
EW183B	175
EW212	161
EWQ202	159
EWS-78	199
EX0200CE	5021A
EX0010GE	5011A
EX0020GE	5010A
EX0011GE	5024A
EX0019TA	5022A
EX0021TA	5020A
EX0023GE	140A
EX0024CE	5013A
EX0038CE	142A
EX0042CE	5089A
EX0042TA	5009A
EX0044CE	5019A
EX0045TA	5011T1
EX0046TA	5015A
EX0047CE	5021A
EX0047TA	5019A
EX0048CE	5013A
EX0051CE22.5V	5030A
EX0061CE	142A
EX0065CE	5025A
EX0074CE	5161A
EX0084CE	5093A
EX0085CE	5014A
EX0088CE	5014A
EX0089CE	5016A
EX0091CE	5030A
EX0092CE3.9V	5007A
EX0101CE	5002A
EX0103CE	5011A
EX0106CE	5047A
EX0130CE	5029A
EX0140CE	5014A
EXOD43TA5.6V	5011A
EX0112CE	5027A
EX0113CE15V	5025A
EX0114CE9.1V	5018A
EX0116GE	5014A
EX0131CE	5010A
EX0136CE	134A
EX0137CE	5069A
EX0137TA	5009A
EX0138CE	5014A
EX0147CE	5015A
EX0161CE	5015A
EX0161CEZZ	5015A
EX0163CE	5049A
EX0192CE	137A
EX0193CE	5020A
EX0217CE	5024A
EX0219CE	5036A
EX0444CE	5006A
EX15X25	102A
EX16X10	177
EX16X27	177
EX39	705A
EX42-X	714
EX76-X	116
EX85B-X	118
EX142-X	177
EX215-X	513
EX499-X	123AP
EX500-X	123AP
EX695-X	123AP
EX699-X	106
EX743-X	154
EX744-X	128
EX746-X	159
EX748-X	123AP
EX831-X	163A
EX868-X	171
EX888-X	123AP
EX911-X	157
EX3524	1720
EX4035	722
EX4053	722
EX-39	705A
EX-141216	128
EXD019T2	5022A
EXO113CE15V	5025A
EXT954-20C	1719
EXT95423C	1548
EXV420DIR5JB	109
EYP-1BS163	8167
EYP-2AS103	8103
EYP-2AS129	8125
EYP-2AS163	8167
EYP-2AU163	8167
EYP-2AY163	8167
EYP-2SA109	8108
EYV420D1R5JB	109
EYV420DIR5JB	109
EYV-320D1R2J	177
EYV-420D1R5JA	116
EYZP623	159
EYZP632	123AP
EYZP791	123AP
EYZP808	234
EYZP-307-900	5529
EYZP-384	177
EYZP-546	159
EYZP-623	159
EYZP-632	123AP
EYZP-791	123AP
EYZP-808	234
EZ3(ELCOM)	5066A
EZ3-7(ELCOM)	5120A
EZ3-12(ELCOM)	5127A
EZ3-14(ELCOM)	5129A
EZ3-15(ELCOM)	5130A
EZ3-16(ELCOM)	5131A
EZ3-20(ELCOM)	5135A
EZ3-30(ELCOM)	5141A
EZ4(ELCOM)	5067A
EZ5(ELCOM)	5069A
EZ5-30(ELCOM)	5141A
EZ5R6(ELCOM)	136A
EZ6(ELCOM)	5071A
EZ7(ELCOM)	138A
EZ8(ELCOM)	5072A
EZ9(ELCOM)	139A
EZ10(ELCOM)	140A
EZ10-7(ELCOM)	5181A
EZ10-8(ELCOM)	5183A
EZ10-10(ELCOM)	5186A
EZ10-12(ELCOM)	5188A
EZ10-24(ELCOM)	5198A
EZ10-28(ELCOM)	5201A
EZ11(ELCOM)	5074A
EZ12(ELCOM)	142A
EZ13(ELCOM)	143A
EZ14(ELCOM)	144A
EZ15(ELCOM)	145A
EZ16(ELCOM)	5075A
EZ18(ELCOM)	5077A
EZ20(ELCOM)	5079A
EZ22(ELCOM)	5080A
EZ24(ELCOM)	5081A
EZ27(ELCOM)	141A
EZ30(ELCOM)	5084A
EZ33(ELCOM)	147A
EZ36(ELCOM)	5085A
EZ39(ELCOM)	5086A
EZ47(ELCOM)	5088A
EZ56(ELCOM)	5090A
EZ62(ELCOM)	149A
EZ68(ELCOM)	5092A
EZ82(ELCOM)	150A
EZ110(ELCOM)	151A
EZ150	145A
EZ-20(ELCOM)	5135A
EZT308	904
F0082M	725
F05	116
F06C05	581
F06C10	581
F06C15	581
F06C20	581
F06C30	581
F06C40	581
F08A05	581
F08A10	581
F08A15	581
F08A20	581
F08A30	581
F08A40	581
F1	552
F1(DIODE)	552
F1(STUD RECT)	6354
F1R3G	5457
F2	116
F3	116
F3A3	5980
F3A3R	5981
F3B3	5982
F3B3R	5983
F3C3R	5987
F3C33	5986
F3D3	5988
F3D3R	5989
F3E3	5988
F3E3R	5989
F3F3	5990
F3F3R	5991
F3G3	5990
F3G3R	5991
F3H3	5992
F3H3R	5993
F3K3	5994
F3K3R	5993
F3M3	5998
F3M3R	5999
F3N3	5998
F3N3R	5999
F3P3	6002
F3P3R	6003
F4	116
F4-005	725
F4A3	5980
F4A3R	5981
F4B3	5982
F4B3R	5983
F4C3	5986
F4C3R	5987
F4D3	5988
F4D3R	5989
F4E3	5988
F4E3R	5989
F4F3	5990
F4F3R	5991
F4G3	5990
F4G3R	5991
F4H3	5992
F4H3R	5993
F4K3	5994
F4K3R	5995
F4M3	5998
F4M3R	5999
F4N3	5998
F4N3R	5999
F4P3	6002
F4P3R	6003
F5	116
F5A3	6020
F5A3R	6021
F5B3	6022
F5B3R	6023
F5C3	6026
F5C3R	6027
F5D3	6030
F5D3R	6031
F5E3	6030
F5E3R	6031
F5F3	6034
F5F3R	6035
F5G3	6034
F5G3R	6035
F5H3	6038
F5H3R	6039
F5K3	6040
F5K3R	6041
F5KF20	597
F5M3	6042
F5M3R	6043
F5N3	6042
F5N3R	6043
F5P3	6044
F5P3R	6045
F6	116
F6A3	6048
F6A3R	6049
F6B3	6050
F6B3R	6051
F6C3	6054
F6C3R	6055
F6D3	6058
F6D3R	6059
F6E3	6058
F6E3R	6059
F6F3	6060
F6F3R	6061
F6G3	6064
F6G3R	6065
F6H3	6064
F6H3R	6065
F6K3	6064
F6K3R	6065
F6M3	6068
F6M3R	6069
F6N3	6068
F6N3R	6069
F6P3	6072
F6P3R	6073
F7A3	6074
F7A3R	6075
F7B3	6074
F7B3R	6075
F7C3	6074
F7C3R	6075
F7D3	6074
F7D3R	6075
F7E3	6074
F7E3R	6075
F7F3	6074
F7F3R	6075
F7G3	6074
F7G3R	6075
F7H3	6076
F7H3R	6077
F7K3	6076
F7K3R	6077
F7M3	6078
F7M3R	6079
F7N3	6078
F7N3R	6079
F7P3	6078
F7P3R	6079
F7R3	6078
F7R3R	6079
F8	125
F10	125
F11C44	974
F14	116
F14-C	116
F14A	116
F14A-9	116
F14A-P	116
F14AP	125
F14B	125
F14C	125
F14D	125
F14E	125
F14F	125
F14H	125
F14J	125
F16H1	137A
F20	121
F20-1001	108
F20-1002	108
F20-1003	108
F20-1004	108
F20-1005	108
F20-1006	102A
F20-1007	102A
F20-1008	102A
F20-1009	102A
F20-1010	109
F20-1012	109
F20-1013	109
F20-1014	109
F20-1015	116
F20-1016	116
F24E-001	614
F24T-011-013	107
F24T-011-015	107
F24T-016-024	107
F32	5522
F34	5524
F36	5526
F64K	4164
F64K-15	4164
F64K-20	4164
F67E	121
F74LS28	74LS28
F74LS28PC	74LS28
F74LS33	74LS33
F74LS33PC	74LS33
F74LS95B	74LS95B
F74LS95BC	74LS95B
F74LS95BPC	74LS95B
F74LS133	74LS133
F74LS133PC	74LS133
F74LS160DC	74LS160A
F74LS160P	74LS160A
F74LS165	74LS165
F74LS165PC	74LS165
F74LS168	74LS168A
F74LS168PC	74LS168A
F74LS169PC	74LS169A
F74LS181	74LS181
F74LS181PC	74LS181
F74LS194A	74LS194A
F74LS194APC	74LS194A
F74LS251	74LS251
F74LS251DC	74LS251
F74LS251PC	74LS251
F74LS260	74LS260
F74LS260PC	74LS260
F74LS295	74LS295A
F74LS295A	74LS295A
F74LS295APC	74LS295A
F74LS295PC	74LS295A
F74LS353	74LS353
F74LS353DC	74LS353
F74LS373PC	74LS373
F74LS378	74LS378
F74LS378DC	74LS378
F74LS378PC	74LS378
F74LS379	74LS379
F74LS379PC	74LS379
F74LS390	74LS390
F74LS390DC	74LS390
F74LS390PC	74LS390
F74LS393	74LS393
F74LS395PC	74LS395A
F74LS398	74LS398
F74LS398PC	74LS398
F74LS399	74LS399
F74LS399PC	74LS399
F74LS490	74LS490
F74LS490DC	74LS490
F74LS490PC	74LS490
F74LS540DC	74LS540
F74LS540PC	74LS540
F74LS541DC	74LS541
F74LS541PC	74LS541
F78L05AC	977
F78L05AWC	977
F78L62AC	988
F78L62WV	988
F88-9779F	736
F96N	108
F103P	106
F114E	552
F121-546	123AP
F121-603	106
F121-60216	106
F121-433804	123AP
F136	109
F161-249-1001	949
F209	159
F211	5529
F211A	5529
F215-1001	108
F215-1002	108
F215-1003	108
F215-1004	108
F215-1005	108
F215-1006	102A
F215-1007	102A
F215-1008	102A
F215-1009	102A
F215-1010	109
F215-1012	109
F215-1013	109
F215-1014	109
F215-1016	116
F215-1017	116
F222	123AP
F248	314
F248A	314
F266	5473
F266A	5473
F267	5474
F267A	5474
F268	5474
F268A	5474
F295-02	177
F295-03	552
F302-1	123AP
F302-2	123AP
F302-1532	123AP
F302-2532	123AP
F306-001	123AP
F306-022	123AP
F318-1	128
F324	395
F324(EUROPE)	395
F361	128
F366	123AP
F422	399
F422P	399
F442-41	725
F501	161
F501(ZENITH)	161
F501-16	161
F502	161
F502(ZENITH)	161
F523	161
F549-1	159
F572-1	123AP
F587	123AP
F610	614
F625-1	128
F699	159
F757PC	722
F767PC	722
F1168A	230
F1427-100	5454
F1427-200	5455
F1427-300	5456
F1428-200	5463
F1428-400	5465
F1462	132
F1463	132
F1826-0044	725
F2041	193
F2427	108
F2443	123AP
F2448	123AP
F2450	108
F2480	102
F2584	123AP
F2633	108
F2634	108
F2636	108
F2708D	2708
F2716D	2716
F2732	2732A
F3519	123AP
F3530	108
F3532	123AP
F3535	161
F3549	129
F3559	159
F3560	128
F3561	128
F3565	128
F3569	123AP
F3570	159
F3571	123AP
F3574	161
F3589	128
F3590	159
F3597	159
F4001	4001B
F4001B	4001B
F4001BC	4001B
F4001BDC	4001B
F4001BM	4001B
F4001BPC	4001B
F4001PC	4001B
F4002	4002B
F4002BC	4002B
F4002BM	4002B
F4006BC	4006B
F4006BM	4006B
F4006M	4006B
F4007UBC	4007
F4007UBM	4007
F4008BC	4008B
F4008BM	4008B
F4011	4011B
F4011BC	4011B
F4011BM	4011B
F4011PC	4011B
F4012BC	4012B
F4012BM	4012B
F4013	4013B
F4013BC	4013B
F4013BM	4013B
F4014BC	4014B
F4014BM	4014B
F4015	4015B
F4015BC	4015B
F4015BM	4015B
F4016	4016B
F4016C	4016B
F4016M	4016B
F4017	4017B
F4017BC	4017B
F4017BM	4017B
F4018BC	4018B
F4018BM	4018B
F4019	4019B
F4019B	4019B
F4019BC	4019B
F4019BDC	4019B
F4019BM	4019B
F4019BPC	4019B
F4019PC	4019B
F4020BC	4020B
F4020BM	4020B
F4021BC	4021B
F4021BM	4021B
F4022BC	4022B
F4022BM	4022B
F4023BC	4023B
F4023BM	4023B
F4024	4024B
F4024BC	4024B
F4024BM	4024B
F4025	4025B
F4025B	4025B
F4025BC	4025B
F4025BDC	4025B
F4025BM	4025B
F4025BPC	4025B
F4025PC	4025B
F4027	4027B
F4027B	4027B
F4027BC	4027B
F4027BDC	4027B
F4027BM	4027B
F4027BPC	4027B
F4027PC	4027B
F4028B	4028B
F4028BC	4028B
F4028BDC	4028B
F4028BM	4028B
F4028BPC	4028B
F4028PC	4028B
F4029	4029B
F4029BC	4029B
F4029BM	4029B
F4029PC	4029B
F4030	4030B
F4030B	4030B
F4030BDC	4030B
F4030PC	4030B
F4031B	4031B
F4031BDC	4031B
F4031BPC	4031B
F4034BC	4034B
F4034BM	4034B
F4035BC	4035B
F4035BM	4035B
F4040	4040B
F4040BC	4040B
F4040BM	4040B
F4041BC	4041
F4041BM	4041
F4042	4042B
F4042BC	4042B
F4042BM	4042B
F4043BC	4043B
F4043BM	4043B
F4044	4044B
F4044B	4044B
F4044BC	4044B
F4044BDC	4044B
F4044BM	4044B
F4044BPC	4044B
F4045B	4045B
F4045BDC	4045B
F4045BPC	4045B
F4046BC	4046B
F4046BM	4046B
F4047BC	4047B
F4047BM	4047B
F4049BC	4049
F4049BM	4049
F4050	4050B
F4050BC	4050B
F4050BM	4050B
F4051BC	4051B
F4051BM	4051B
F4052	4052B
F4052BC	4052B
F4052BM	4052B
F4053BC	4053B
F4053BM	4053B
F4055PC	4055B
F4066BC	4066B
F4066BM	4066B
F4067B	4067B
F4067BDC	4067B
F4067BPC	4067B
F4068BC	4068B
F4068BM	4068B
F4069UBC	4069
F4069UBM	4069
F4070BC	4070B
F4070BM	4070B
F4071BC	4071B
F4071BM	4071B
F4072BC	4072B
F4072BM	4072B
F4073BC	4073B
F4073BM	4073B
F4075BC	4075B
F4075BM	4075B
F4076BC	4076B
F4076BM	4076B
F4077BC	4077B
F4077BM	4077B
F4077BPC	4077B
F4078BC	4078B
F4078BM	4078B
F4081	4081B
F4081BC	4081B
F4081BM	4081B
F4082BC	4082B
F4082BM	4082B
F4085BC	4085B
F4085BM	4085B
F4086BC	4086B
F4086BM	4086B
F4093BC	4093B
F4093BM	4093B
F4093DC	4093B
F4093PC	4093B
F4117-1	949
F4164	4164
F4164-15	4164
F4164-20	4164
F4510BC	4510B
F4510BM	4510B
F4511	4511B
F4511BC	4511B
F4511BM	4511B
F4511BPC	4511B
F4512BC	4512B
F4512BM	4512B
F4514BC	4514B
F4514BM	4514B
F4515BC	4515B
F4515BM	4515B
F4516BC	4516B
F4516BM	4516B
F4518BC	4518B
F4518BM	4518B
F4520BC	4520B
F4520BM	4520B
F4522B	4522B
F4522BC	4522B
F4522BDC	4522B
F4522BM	4522B
F4522BPC	4522B
F4522PC	4522B
F4526B	4526B
F4526BDC	4526B
F4526BPC	4526B
F4528B	4528B
F4528BC	4528B
F4528BDC	4528B
F4528BM	4528B
F4528BPC	4528B
F4531BC	4531B
F4531BDC	4531B
F4531BPC	4531B
F4532B	4532B
F4532BDC	4532B
F4532BPC	4532B
F4539B	4539B
F4539BC	4539B
F4539BDC	4539B
F4539BM	4539B
F4539PC	4539B
F4553	4553B
F4553B	4553B
F4553BC	4553B
F4555BC	4555B
F4555BM	4555B
F4556B	4556B
F4556BC	4556B
F4556BDC	4556B
F4556BM	4556B
F4556BPC	4556B
F4583B	4556B
F4583BDC	4583B
F4583BPC	4583B
F4706	108
F4709	128
F4846-1	949
F6802	6802
F6809	6809
F6809E	6809E
F6809EP	6809E
F6809P	6809
F7316	123AP
F7430PC	7430
F7474PC	7474
F7476PC	7476
F8114	5527

PART NUMBER	NTE REPLACEMENT
F9014D(REALISTIC)	123AP
F9309	8309
F9309DC	8309
F9309PC	8309
F9314	8314
F9314DC	8314
F9314PC	8314
F9316PC	74161
F9328	8328
F9328DC	8328
F9328PC	8328
F9370	8370
F9370PC	8370
F9374	8374
F9374DC	8374
F9374PC	8374
F9600	123AP
F9602	9602
F9602P	9602
F9602PC	9602
F9623	123AP
F9623(G.E.)	108
F9623F	123AP
F9625	108
F10124	116
F10148	116
F10180	116
F11034	125
F13316	152
F13317	291(12)
F15810	108
F15835	108
F15840	123AP
F15840-1	123AP
F15841	108
F20303	109
F21490	159
F40085BC	40085B
F40085BM	40085B
F40097	80C97
F40097B	40097B
F40097BDC	40097B
F40097BPC	40097B
F40097DC	80C97
F40097PC	80C97
F40098B	40098B
F40098BDC	40098B
F40098BPC	40098B
F40160B	40160B
F40160BC	40160B
F40160BDC	40160B
F40160BM	40160B
F40160BPC	40160B
F40161BC	40161B
F40161BM	40161B
F40162BC	40162B
F40162BM	40162B
F40163BC	40163B
F40163BM	40163B
F40174BC	4017B
F40174BM	40174B
F40175BC	40175B
F40175BM	40175B
F40192BC	40192B
F40192BDC	40192B
F40192BM	40192B
F40192BPC	40192B
F40193B	40193B
F40193BC	40193B
F40193BDC	40193B
F40193BM	40193B
F40193BPC	40193B
F40194BDC	40194B
F40194BPC	40194B
F40194PDC	40194B
F40195B	40195B
F40195BDC	40195B
F40195BPC	40195B
F50116	161
F69916	128
F73216	160
F74157	74157
F74157DC	74157
F74157PC	74157
F74173	74173
F74173DC	74173
F74173PC	74173
F75116	123AP
F75450	75450B
F75450APC	75450B
F75450BPC	75450B
F75451	75451B
F75451ATC	75451B
F75451BTC	75451B
F75452	75452B
F75452ATC	75452B
F75452BTC	75452B
F75453	75453B
F75453ATC	75453B
F75453BTC	75453B
F75454	75454B
F75454ATC	75454B
F75454BTC	75454B
F78105AV	977
F136555	725
F889779F	736
F-05	116
F-14A	116
F-14C	116
F-67-E	104
F-74LS04PC	74LS04
F-74LS86PC	74LS86
F-74S138PC	74S138
F-302-1	123AP
F-302-1532	123AP
F-302-2532	123AP
F-677	144A
F-7402PC	7402
F-7404PC	7404
F-7417PC	7417
F-10167	171
F-12227	552
F-12737	152(12)
F-13316	152(12)
F-13317	291
F-14168	177
F-14959	177
F-15023	177
F-15024	177
F-16147	177(12)
F-1614712	177(12)
FA4	116
FA6	116
FA8	125
FA111	177
FA733CK	927
FA8005	141A
FA8006	141A
FA8007	141A
FA8008	141A
FA8009	145A
FA8010	145A
FA8011	145A
FA8012	145A
FA-1	5013A
FA-1(DIODE)	109
FA-1(SEARS)	123AP
FA-1(TRANS)	175
FA-4	125
FB30G(RECT)	580
FB200	168
FB274	1045
FB401	160
FB402	160
FB403	160
FB420	102A
FB421	102A
FB440	160
FB1043	109
FB2500	5322
FB2500L	5322W
FB2501	5322
FB2501L	5322W
FB2502	5322
FB2502L	5322W
FB2504	5324
FB2504W	5324W
FB2506	5326
FB2506W	5326W
FB6853	123AP
FB-200	168
FBC237	123AP
FBN-2N1183	176
FBN-35469	175
FBN-35903	175
FBN-36220	130
FBN-36485	130
FBN-36486	175
FBN-36488	175
FBN-36603	130
FBN-36972	181
FBN-36973	181
FBN-37605	124
FBN-38021	124
FBN-38022	181
FBN-38982	124
FBN-CP2293	102
FBN-CP34634	128
FBN-CP34759	176
FBN-L108	124
FBN-L109	128
FBN-L113	128
FBN-L115	128
FBN-L148	128
FBP-00-024	5547
FBS3425F	5685
FBS3515F	5676
FBS3525F	5686
FBT-00-015	912
FBTX070	128
FBU4A	5329
FBU4B	5329
FBU4D	5329
FBU4G	5330
FBU4J	5330
FC4182E	74182
FC5006	108
FC-52	612
FC-52M	612
FCD0003PC	177
FCD0070ANC	614
FCD0070PC	614
FCD0014NCS	177
FCD0074	614
FCD810	3040
FCD810A	3040
FCD820	3040
FCD820A	3040
FCD820B	3040
FCD825A	3041
FCD825B	3041
FCD825C	3041
FCD825D	3041
FCD830	3040
FCD830A	3040
FCD830B	3040
FCD831	3040
FCD831A	3040
FCD831B	3040
FCD836	3040
FCD850	3084
FCD850C	3084
FCD855	3083
FCD855C	3083
FCD860	3084
FCD860C	3084
FCD865	3084
FCD865C	3084
FCS916F	229
FCS1168E	108
FCS1168E641	108
FCS1168F813	123AP
FCS1168G	123AP
FCS1168G704	123AP
FCS1170F	159
FCS1225E	108
FCS1227E	108
FCS1227E814	108
FCS1227F	108
FCS1227F743	108
FCS1227G	108
FCS1227G810	108
FCS1229	128
FCS1229F	123AP
FCS1229G	123AP
FCS1795D	129
FCS8050C	123AP
FCS8550	290
FCS8550C	290
FCS9011	289A
FCS9011A	123AP
FCS9011D	289A
FCS9011E	108
FCS9011F	123AP
FCS9011G	85
FCS9011H	123A
FCS9011I	289A
FCS9012D	290A
FCS9012E	290A
FCS9012G	159
FCS9012H	290A
FCS9012HE	159
FCS9012HG	129
FCS9012HH	106
FCS9012I	290A
FCS9013	123A
FCS9013F	85
FCS9013G	85
FCS9013H	85
FCS9013HG	128
FCS9013HH	128
FCS9014	108
FCS9014(B)	123AP
FCS9014A(EBC)	199
FCS9014B	108
FCS9014C	199
FCS9014D	108
FCS9015B	159
FCS9015C	159
FCS9015D	106
FCS9016	229
FCS9016D	108
FCS9016E	123AP
FCS9016F	123AP
FCS9016G	107
FCS9016G/3772	107
FCS9016H	107
FCS9016I	107
FCS9018	108
FCS9018D	108
FCS9018E	108
FCS9018E/3772	108
FCS9018F	108
FCS9018G	108
FCS9018H	108
FCS9018I	108
FCS9066	108
FCS-9012-HH	159
FCS-9012F	159
FCS-9012G	159
FCS-9013F	123AP
FCS-9013G	123AP
FCS-9015C	106
FCS-9016F	319P
FCS-9018F	123AP
FD01880	519
FD06193	519
FD3	116
FD6	116
FD100	177
FD111	177
FD200	177
FD222	177
FD300	116
FD333	116
FD600	519
FD777	519
FD1029-WP	285
FD1029EE	102
FD1599	116
FD1708	177
FD1843	177
FD1980	109
FD3389	116
FD3405	507
FD4500AL	181
FD6451	177
FD6489	177
FD8050	289
FD-1029-4&	159
FD-1029-BG	102
FD-1029-CK	104
FD-1029-DF	116
FD-1029-DG	116
FD-1029-EE	102
FD-1029-ET	121
FD-1029-FJ	5874
FD-1029-FR	5194A
FD-1029-FY	128
FD-1029-GE	128
FD-1029-GM	128
FD-1029-GP	519
FD-1029-HJ	5281A
FD-1029-HN	519
FD-1029-HP	129
FD-1029-JA	123AP
FD-1029-JB	298
FD-1029-JE	5882
FD-1029-JK	5214A
FD-1029-JN	128
FD-1029-JP	159
FD-1029-KT	5408
FD-1029-LL	123AP
FD-1029-LU	280
FD-1029-LW	281
FD-1029-MB	129
FD-1029-MC	177
FD-1029-ME	552
FD-1029-ML	129
FD-1029-MM	128
FD-1029-NG	123AP
FD-1029-NS	192
FD-1029-NY	82
FD-1029-PA	128
FD-1029-PL	327
FD-1029-PP	123AP
FD-1029-PT	123AP
FD-1029-PU	159
FD-1029-RB	129
FD-1029-RG	5463
FD-1029-RU	5008A
FD-1029-RW	519
FD-1029-SL	552
FD-1029-SN	125
FD-1029-TC	5015A
FD-1029-TE	5005A
FD-1029-WC	5069A
FD-1029-WE	123AP
FD-1029-WG	159
FD-1029-WK	377
FD-1029-WN	5010A
FD-1029-WP	285
FD-1029-YC	5007A
FD-1029-YD	123AP
FD-1029-YE	159
FD-1029ET	121
FD-1073-AY	923
FD-1073-BF	7400
FD-1073-BG	7402
FD-1073-BH	7403
FD-1073-BJ	7404
FD-1073-BM	7408
FD-1073-BN	7410
FD-1073-BR	7420
FD-1073-BS	7430
FD-1073-BU	7440
FD-1073-BW	7451
FD-1073-CA	7486
FD-1073-CC	7447
FD-1073-CG	7493A
FD-1073-CT	941
FD-1073-EC	924
FD-1073-ED	922
FD-1073-EH	75188
FD-1073-EM	910D
FD-1073-EY	75453B
FD-1073-FA	74128
FD-1073-FL	7427
FD-1073-FN	74193
FD-1073-FP	919D
FD-1073-FT	956
FD-1073-FW	74125
FD-1073-FY	7409
FD-1073-GB	923D
FD-1079-AY	4528B
FD-1079-BC	8080A
FD-1079-BJ	4585B
FD-1079-BW	4024B
FD-1079-CE	4502B
FD-1079-CM	4015B
FD-1079-CN	4543B
FD-1079-DB	4001B
FD-1079-DC	4011B
FD-1079-DD	4049
FD-1079-DE	4050B
FD-1079-DF	4002B
FD-1079-DG	4012B
FD-1079-DH	4023B
FD-1079-DJ	4028B
FD-1079-DS	4066B
FD-1080-DG	8212
FD-1081--BH	74LS670
FD-1081-AC	74LS139
FD-1081-AE	74LS158
FD-1081-AG	74LS197
FD-1081-AT	74LS161A
FD-1081-BD	74LS258
FD-1081-BE	74LS283
FD-1081-BG	74LS367
FD-1081-BL	74LS365A
FD-1081-BP	74LS20
FD-1081-BS	74LS11
FD-1081-BT	74LS38
FD-1081-BW	74LS30
FD-1081-BY	74LS240
FD-1081-CA	74LS244
FD-1081-CC	74LS27
FD-1081-CD	74LS37
FD-1081-CE	74LS85
FD-1081-CF	74LS93
FD-1081-CG	74LS112A
FD-1081-CH	74LS123
FD-1081-CK	74LS164
FD-1081-CM	74LS191
FD-1081-CP	74LS273
FD-1081-CT	74LS374
FD-1081-CU	74LS05
FD-1081-CW	74LS14
FD-1081-CY	74LS221
FD-1081-DA	74LS125A
FD-1081-DB	74LS42
FD-1081-DC	74LS242
FD-1081-DD	74LS368
FD-1081-DF	74LS241
FD-1081-DG	74LS279
FD-1081-DH	74LS155
FD-1081-DJ	74LS21
FD-1081-DM	74LS253
FD-1081-DN	74LS160A
FD-4500-11	124
FD-8050	85
FDH400	116
FDH444	177
FDH600	506
FDH666	177
FDH694	177
FDH900	177
FDH6229	177
FDH-9	177
FDH-444	519
FDM1006	177
FDM1007	177
FDN600	177
FDN666	177
FE1A	587
FE1B	587
FE1C	587
FE1D	587
FE2A	588
FE2B	588
FE2C	588
FE2D	588
FE3A	588
FE3B	588
FE3C	588
FE3D	588
FE5A	576
FE5B	576
FE5C	576
FE5D	576
FE16AR	6244
FE16BR	6244
FE16CR	6244
FE16DR	6244
FE47	293
FE100	133
FE100A	133
FE102	133
FE102A	133
FE104A	133
FE400	133
FE402	133
FE402A	133
FE404A	133
FE5245	312
FE-100	312
FEL2113	709
FEN16DT	6244
FEP16AT	6244
FEP16BT	6244
FEP16CT	6244
FEP16DT	6244
FEP16FT	6241
FEP16GT	6241
FEP16HT	6241
FEP16JT	6241
FEP30AP	6246
FEP30BP	6246
FEP30CP	6246
FEP30DP	6246
FEP30FP	6247
FEP30GP	6247
FEP30HP	6247
FEP30JP	6247
FER3001	6246
FER3002	6246
FER3003	6246
FER3004	6247
FER3005	6247
FES8AT	597
FES8BT	597
FES8CT	597
FES8DT	597
FES8FT	598
FES8GT	598
FES8HT	598
FES8JT	598
FES16AT	599
FES16BT	599
FES16CT	599
FES16DT	599
FF02A02E0F	5700
FF3B	580
FF400	133
FFA01E0F	5700
FFA03E0F	5700
FFA04E0F	5700
FFA05E0F	5700
FFC-4030	754
FG2N	506
FG2PC	506
FG79	199
FG9013	123AP
FG9016	229
FG-2N	506
FG-2N2	506
FG-2N/10D-4	506
FG-2NA	116
FG-12377	177
FGM03-4	500A
FH100	112
FH340M	5465
FI 1023	107
FI-1007	159
FI-1008	159
FI-1019	106
FI-1021	234
FI-1023	107
FJ1033	108
FJH101	7430
FJH111	7420
FJH121	7410
FJH131	7400
FJH141	7440
FJH151	7450
FJH161	7451
FJH171	7453
FJH181	7454
FJH191	7480
FJH201	7482
FJH211	7483
FJH221	7402
FJH231	7495
FJH241	7404
FJH251	7405
FJH261	7442
FJH271	7486
FJH281	74180
FJH291	7403
FJH301	7426
FJH311	7401
FJH321	7405
FJH341	74154
FJH421	7408
FJJ101	7470
FJJ111	7472
FJJ121	7473
FJJ131	7474
FJJ141	7490
FJJ152	7492
FJJ181	7475
FJJ191	7476
FJJ211	7493A
FJJ241	7496
FJJ251	7492
FJJ261	74107
FJK101	74121
FJL101	7441
FJL131	7413
FJY101	7460
FK914	108
FK918	108
FK2369A	108
FK2484	108
FK2894	106
FK3014	108
FK3299	108
FK3300	108
FK3484	123AP
FK3494	123AP
FK3502	194
FK3503	194
FL274	712
FLH101	7400
FLH105	7470
FLH115	7410
FLH121	7420
FLH125	7420
FLH131	7430
FLH135	7430
FLH141	7440
FLH145	7440
FLH151	7450
FLH155	7450
FLH161	7451
FLH165	7451
FLH171	7453
FLH175	7453
FLH181	7454
FLH185	7454
FLH191	7402
FLH195	7402
FLH195S	7402
FLH201	7401
FLH205	7401
FLH211	7404
FLH215	7404
FLH221	7480
FLH225	7480
FLH231	7482
FLH235	7482
FLH241	7483
FLH245	7483
FLH271	7405
FLH275	7405
FLH281	7442
FLH285	7442
FLH291	7403
FLH291U	7426
FLH295	7403
FLH341	7486
FLH345	7486
FLH351	7413
FLH355	7413
FLH361	7443
FLH365	7443
FLH371	7444
FLH375	7444
FLH381	7408
FLH385	7408
FLH391	7409
FLH395	7409
FLH401	74181
FLH405	74181
FLH411	74182
FLH415	74182
FLH421	74180
FLH425	74180
FLH431	7485
FLH435	7485
FLH441	74H87
FLH441-74H87	74H87
FLH445	74H87
FLH451	74H183
FLH455	74H183
FLH481	7406
FLH481T	7416
FLH485	7406
FLH485T	7416
FLH491	7407
FLH491T	7417
FLH495	7407
FLH495T	7417
FLH501	7412
FLH505	7412
FLH511	7423
FLH515	7423
FLH521	7425
FLH525	7425
FLH531	7437
FLH535	7437
FLH541	7438
FLH545	7438
FLH551	7448
FLH555	7448
FLH581	7411
FLH601	74132
FLH605	74132
FLH611	7422
FLH615	7422
FLH621	7427
FLH625	7427
FLH631	7432
FLH635	7432
FLH665	7428
FLJ101	7470
FLJ105	7470
FLJ111	7472
FLJ115	7472
FLJ121	7473
FLJ125	7473
FLJ131	7476
FLJ135	7476
FLJ141	7474
FLJ145	7474
FLJ151	7475
FLJ155	7475
FLJ161	7490
FLJ165	7490
FLJ171	7492
FLJ175	7492
FLJ181	7493A
FLJ185	7493A
FLJ191	7495
FLJ195	7495
FLJ201	74190
FLJ205	74190
FLJ211	74191
FLJ215	74191
FLJ221	7491
FLJ225	7491
FLJ231	7494
FLJ235	7494
FLJ241	74192
FLJ245	74192
FLJ251	74193
FLJ255	74193
FLJ261	7496
FLJ265	7496
FLJ271	74107
FLJ275	74107
FLJ311	74198
FLJ315	74198
FLJ321	74199
FLJ325	74199
FLJ331	7497
FLJ345	74110
FLJ355	74111
FLJ381	74196
FLJ385	74196
FLJ391	74197
FLJ395	74197
FLJ401	74160
FLJ405	74160
FLJ411	74161
FLJ415	74161
FLJ421	74162
FLJ425	74162
FLJ431	74163
FLJ435	74163
FLJ441	74164
FLJ445	74164
FLJ451	74165
FLJ455	74165
FLJ461	74166
FLJ465	74166
FLJ531	74174
FLJ535	74174

PART NUMBER	NTE REPLACEMENT
FLJ541	74175
FLJ545	74175
FLJ561	74195
FLJ565	74195
FLK101	74121
FLK105	74121
FLK111	74122
FLK115	74122
FLK121	74123
FLK125	74123
FLL101	74141
FLL111	7445
FLL111T	74145
FLL115	7445
FLL115T	74145
FLL121	7446
FLL121T	7447
FLL121U	7446
FLL121V	7447
FLL125	7446
FLL125T	7447
FLL125U	7446
FLL125V	7447
FLQ101	7489
FLQ105	7489
FLQ131	74170
FLQ135	74170
FLV150	3020
FLV315	3024
FLV355	3024
FLV450	3021
FLY101	7460
FLY105	7460
FLY111	74150
FLY115	74150
FLY121	74151
FLY125	74151
FLY131	74153
FLY135	74153
FLY141	74154
FLY145	74154
FLY151	74155
FLY155	74155
FLY161	74156
FLY165	74156
FM009M	113A
FM1J2	116
FM211N	116
FM708	108-1
FM709	108
FM720A	123A
FM869	106
FM870	108
FM871	108
FM910	108
FM911	108
FM914	108
FM1613	128
FM1711	128
FM1893	154
FM2368	108
FM2369	108
FM2846	108
FM2894	106
FM3014	108
FM3958	461
FMG-G26S	598
FML12S	6240
FML-G12S	597
FMLG12S	597
FMMT5087	2409
FMMTA12	2404
FMMTA13	2404
FMMTA14	2404
FMMTA70	2409
FMPS-A20	123AP
FMPSA20	123AP
FN37F20	6074
FN37F60	6076
FN37F120	6078
FN37R20	6075
FN37R60	6077
FN37R120	6079
FN-51-1A	123AP
FND500	3079
FND507	3078
FND807	3080
FND6710	3074
FND6730	3076
FND6740	3075
FND6750	3077
FND6760	3077
FO5	116
FOR1B	5402
FOR3G	5405
FOS100	199
FOS101	199
FOS104	123AP
FPE100	3028
FPI4020	5340
FPI4040	5342
FPI4060	5342
FPI4080	5344
FPI40100	5344
FPN2907	159
FPN3563	108
FPQ2907	2322
FPR40-1001	123AP
FPR40-1003	108
FPR40-1004	102A
FPR40-1005	102A
FPR40-1006	109
FPR50-1001	123AP
FPR50-1002	123AP
FPR50-1003	108
FPR50-1004	108
FPR50-1005	102A
FPR50-1006	102A
FPR50-1011	116
FPT400	3036
FPT500	3032
FPT510	3032
FPT510A	3032
FPT570	3036
FPT-400	3036
FPT-500	3032
FPT-570	3036
FQB01-35	5085A
FR1	116
FR1D	177
FR1M	116
FR1MB	116
FR1MD	116
FR1P	116
FR1U	116
FR2	116
FR2(S1B1)	116
FR2-005	506
FR2-020	116
FR2-0Z	116
FR2-02	116
FR2-02(DIODE)	116
FR2-02(RECT)	506
FR2-02C	506
FR2-04	506
FR2-06	116
FR2-10	506
FR2-0Z	116
FR2M	116
FR2P	116
FR10	116
FR101	552
FR102	552
FR103	552
FR104	552
FR105	552
FR106	558
FR107	558
FR151	506
FR152	506
FR153	506
FR154	506
FR155	506
FR155P	552
FR156	506
FR157	506
FR201	580
FR202	580
FR203	580
FR204	580
FR205	580
FR206	506
FR207	506
FR301	580
FR302	580
FR303	580
FR304	580
FR305	580
FR307	577
FR801	581
FR802	581
FR803	581
FR804	581
FR-1	116
FR-1H	116
FR-1H(M)	116
FR-1HM	116
FR-1M	116
FR-1MD	116
FR-1N	116
FR-1P	116
FR-1U	116
FR-2	116
FR-2M	116
FR-2P	116
FR-10	125
FR-202	116
FR-1033	118
FR-U	116
FRB12-01RK	116
FRB-564	175
FRH101	116
FRH-101	116
FRI033	118
FRS3693	123AP
FS07C	5633
FS07D	5634
FS07E	5635
FS07F	5636
FS07G	5637
FS19	109
FS340M	5424
FS503PA	6158
FS503RA	6158
FS503VA	6158
FS703PA	6158
FS703RA	6158
FS703VA	6158
FS815	963
FS1168E641	123AP
FS1168F813	123AP
FS1221	123AP
FS1308	107
FS1331	128
FS1682	161
FS1974	123AP
FS1978	195A
FS1990	234
FS2003-1	130
FS2042	192
FS2043	123AP
FS2299	160
FS2523(TO39)	195A
FS3266	108
FS3683	108
FS7805M	960
FS7812	966
FS7812M	966
FS7815	968
FS24226	159
FS24954	159
FS26382	106
FS27233	128
FS27604	123AP
FS32669	107
FS35529	108
FS36999	123AP
FS326690	108
FS-1133	123AP
FS-2299	106
FS-7812	966
FSA1169	115
FSA1177	113A
FSA1178	113A
FSA1202	115
FSC9011G	123AP
FSC9016F	229
FSC9016G	107
FSC9018E	108
FSC9018F	108
FSE1001	108
FSE3001	108
FSE4002	199
FSE5002	108
FSM16C2L	5679
FSM16C4L	5679
FSM16C6L	5679
FSM20C2L	5679
FSM20C4L	5679
FSM20C6L	5679
FSM30C2L	5679
FSM30C4L	5679
FSM30C6L	5679
FSP1	107
FSP-1	108
FSP-42	108
FSP-42-1	108
FSP-164	108
FSP-165	108
FSP-166	108
FSP-166-1	108
FSP-215	108
FSP-242-1	108
FSP-270-1	108
FSP-288-1	116
FSP-289-1	108
FST2	116
FST3	116
FT001	128
FT002	128
FT003	128
FT004	128
FT004A	128
FT005	123AP
FT006	123AP
FT008	123AP
FT008A	123AP
FT0019H	128
FT0019M	159
FT0601	222
FT07D	5634
FT07E	5635
FT07F	5636
FT07G	5637
FT023	123AP
FT024	123AP
FT025	123AP
FT026	123AP
FT027	128
FT052	159
FT053	123AP
FT1	177
FT1(SHARP)	177
FT1M	506
FT1N	116
FT1P	506
FT10	125
FT14A	116
FT19H	159
FT19M	159
FT34C	154
FT34D	154
FT34G	312
FT34Y	132
FT40	123AP
FT45	161
FT47	198
FT48	198
FT49	198
FT50	198
FT107B	199
FT107C	5633
FT118	161
FT300	124
FT317	54
FT317A	54
FT317B	54
FT417	55
FT417A	55
FT417B	55
FT431	163A
FT520	376
FT527	235
FT709	108
FT1315	108
FT1324B	108
FT1324C	108
FT1341	159
FT1702	106
FT1746	159
FT3567	123AP
FT3568	123AP
FT3569	123AP
FT3638	159
FT3641	154
FT3642	293
FT3643	123AP
FT3644	193
FT3645	294
FT5040	159
FT5041	159
FT-1	116
FT-1M	506
FT-1N	116
FT-1P	506
FT-10	116
FTIM	506
FU1K	506
FU1M	116
FU1N	116
FU1NA	506
FU1U	116
FU5B7709393	909
FU5B7710393	910
FU5B7740393	940
FU5B7741393	941
FU5B7749393	949
FU5D770331X	703
FU5D770339	703
FU5E7064393	780
FU5F7711393	911
FU5F7715393	915
FU5F7747393	947
FU5T7725393	925
FU6A7709393	909D
FU6A7710393	910D
FU6A7723393	923D
FU6A7741393	941D
FU8B7703339X	703
FU9A7723393	923D
FU9A7741393	941D
FU9T7741393	941M
FU10	506
FU-1M	506
FU-1MA	116
FU-1N	116
FU-1NA	116
FU-IM	116
FUIU	116
FV21	138A
FV22	137A
FV23	109
FV214	605A
FV914	108
FV918	108
FV1043	610
FV2369A	108
FV2484	108
FV2747C	100
FV2894	106
FV3014	108
FV3299	108
FV3300	108
FV3502	194
FV3503	194
FV-11	601
FV-21	138A
FV-22	137A
FV-23	109
FV-24	5070A
FV-1043	610
FW50	166
FW100	166
FW200	167
FW300	168
FW400	168
FW500	169
FW600	169
FW600A	116
FW800	170
FW1000	170
FWB3001	167
FWB3002	167
FWB3003	168
FWB3004	168
FWB3005	169
FWB3006	169
FWL100	116
FWL200	116
FWL300	116
FWLC50	5309
FWLC100	5309
FWLC200	5309
FWLC300	5310
FWLC400	5310
FWLC500	5310
FWLC600	5310
FWLC800	5311
FWLC1000	5311
FX0014CE	3092
FX274	714
FX709	107
FX914	229
FX918	229
FX2368	123AP
FX2483	194
FX3013	229
FX3014	229
FX3300	123AP
FX3502	194
FX3724	293
FX3962	193
FX3964	234
FX4046	123AP
FX4960	192
FZ3.6T5	134A
FZ3.6T10	134A
FZ5.1T5	135A
FZ5.1T10	135A
FZ5.6T5	136A
FZ5.6T10	136A
FZ6.2T10	137A
FZ12A	142A
FZ12T5	142A
FZ12T10	142A
FZ14T5	144A
FZ14T10	144A
FZ15A	145A
FZ15T5	145A
FZ15T10	145A
FZ27A	146A
FZ27T5	146A
FZ27T10	146A
FZ33A	147A
FZ82A	150A
FZ101	123AP
FZ901	135A
FZ1215	142A
G00003A	109
G00004A	110MP
G00009A	109
G0002	160
G00502A	116
G05004A	108
G0005	158
G08005L	133
G0006	102
G09007	1103
G03007	159
G0007	102A
G09007B	1103
G03007C	184
G0008	126
G09009	1006
G09009A	1006
G0010	126
G00-003-A	109
G00-004-A	109
G00-008-A	109
G00-009-A	109
G00-012-A	177
G00-012A	177
G00-013-8	109
G00-014-A	177
G00-502-A	116
G00-502A	116
G00-534-A	116
G00-535-B	116
G00-535A	116
G00-536-A	116
G00-536A	116
G00-543-A	116
G00-551-A	116
G00-803-A	177
G004	102A
G005-036C	123AP
G005-036E	123AP
G0011	101
G03014	294
G09015	1003
G05015C	123AP
G05035D	199
G05035E	123AP
G01036	139A
G05036	123AP
G01036A	137A
G05036B	123AP
G05036C	123AP
G05036D	123AP
G05036E	123AP
G01036G	139A
G05037B	123AP
G04041B	107
G05059	123AP
G01209	177
G01209B	177
G01401A	614
G00535	116
G00535A	116
G03703C	187
G05705	152
G01803	177
G01803A	177
G0Q-535-B	116
G01	116
G01-012-F	140A
G01-036-G	139A
G01-036-H	139A
G01-036A	137A
G01-037-A	142A
G01-083-A	177
G01-209-B	177
G01-209B	177
G01-217-A	177
G01-401-A	614
G01-406-A	614
G01-407-A	614
G01-803-A	178MP
G01-803A	177
G01A	112
G02	116
G02A	112
G03-007C	184
G03-017-B	294
G03-404-B	129
G03-404-C	129
G03-406-C	185
G03-407-Y	159
G04-041B	107
G04-701-A	121
G04-704-A	131
G04-711-E	158
G04-711-F	158
G04-711-G	158
G04-711-H	158
G05-003-A	107
G05-003-B	107
G05-004A	108
G05-010-A	123AP
G05-050-C	107
G05-011-A	123AP
G05-012-G	199
G05-015-D	123AP
G05-015C	123AP
G05-034-D	123AP
G05-035-D	123AP
G05-035-D,E	199
G05-035-E	199
G05-035D	199
G05-035E	123AP
G05-036-B	123AP
G05-036-C	123AP
G05-036-C,D,E	123AP
G05-036-D	123AP
G05-036-E	123AP
G05-036B	123AP
G05-036C	123AP
G05-036D	123AP
G05-036E	123AP
G05-037-A	123AP
G05-037-B	123AP
G05-037-D	229
G05-037B	123AP
G05-055-C	128
G05-055-D	289
G05-055-E	128
G05-063-R	229
G05-064-A	123AP
G05-065-A	229
G05-066A	229
G05-406-C	187A
G05-413A	128
G05-413B	123AP
G05-413C	128
G05-413D	128
G05-415-B	293
G05-416-C	186A
G05-706-D	199
G05-706-E	199
G06-711-B	186
G06-714C	186
G06-717-B	186
G06-717-C	184
G06-717-D	184
G06-717B	184
G08-005L	133
G08-007-B	312
G08D	156
G09-006-A	1029
G09-006-B	1029
G09-006-C	1029
G09-007-A	1103
G09-007-B	1103
G09-008-B	1087
G09-008-C	1087
G09-008-D	1087
G09-008-E	1087
G09-009-A	1006
G09-010-A	1029
G09-011-A	1038
G09-012-A	1038
G09-012-B	1038
G09-012-C	1038
G09-013-A	1058
G09-015-B	1003
G09-017-A	1087
G09-017-B	1087
G09-017-C	1087
G09-017-D	1087
G09-028-A	801
G09-029-C	1103
G09-029-D	1103
G09-029B	1103
G09-036-G	1029
G01211	116
G05413A	128
G05413B	128
G05415	293
G06714C	186
G1	116
G1B	116
G1HA	109
G2	116
G2A	116
G2D	125
G2G	156
G3	116
G3A3	6154
G3B	5801
G3B3	6154
G3C3	6154
G3D3	6154
G3E3	6154
G3F3	6154
G3G3	6154
G3H3	6156
G3K3	6156
G3M3	6158
G3N3	6158
G4	116
G4A3	6154
G4B3	6154
G4C3	6154
G4D3	6154
G4E3	6154
G4F3	6154
G4G3	6154
G4K3	6156
G4M3	6158
G4N1	162
G4N3	6158
G5	116
G5.1T5	135A
G5.1T10	135A
G5.1T20	135A
G5.6T5	136A
G5.6T10	136A
G5.6T20	136A
G5A3	6154
G5A3R	6155
G5A7A66-2	128
G5B3	6154
G5B3R	6155
G5C	109
G5C3	6154
G5C3R	6155
G5D3	6154
G5D3R	6155
G5E3	6154
G5E3R	6155
G5F	109
G5F3	6154
G5F3R	6155
G5G3	6154
G5G3R	6155
G5H3	6156
G5H3R	6157
G5K	109
G5K3	6156
G5K3R	6157
G5M3	6158
G5M3R	6159
G5N3	6158
G5N3R	6159
G5P3	6158
G5P3R	6159
G5R3	6162
G5R3R	6163
G6	116
G6A3	6154
G6A3R	6155
G6B3	6154
G6B3R	6155
G6C3	6154
G6C3R	6155
G6D3	6154
G6D3R	6155
G6E3	6154
G6E3R	6155
G6F3	6154
G6F3R	6155
G6G3	6154
G6G3R	6155
G6H3	6156
G6H3R	6157
G6K3	6156
G6K3R	6157
G6M3	6158
G6M3R	6159
G6N3	6158
G6N3R	6159
G6P3	6158
G6P3R	6159
G6R3	6162
G6R3R	6163
G7	112
G7A	112
G7D	109
G7E	109
G7F	109
G7G	109
G8	125
G9.1T5	139A
G9.1T10	139A
G9.1T20	139A
G10	125
G11	102A
G12	102A
G12T5	142A
G12T10	142A
G12T20	142A
G13	160
G14	102A
G15T10	145A
G15T20	145A
G16	103
G17	103
G18	103
G19	121
G23-45	130
G23-46	128
G23-67	130
G27T5	146A
G27T10	146A
G27T20	146A
G100	109
G100A	116
G100B	116

PART NUMBER	NTE REPLACEMENT
G100D	116
G100G	116
G100J	116
G100K	125
G100M	125
G110	105
G130	116
G156	109
G157	109
G158	109
G159	109
G181-725-001	181
G182AG	112
G198	109
G199	109
G200	109
G212	199
G222	116
G296	116
G297	109
G409	109
G498	109
G504M	5850
G504MR	5851
G506	5850
G506M	5850
G506MR	5851
G510M	5870
G510MR	5871
G580	109
G657	116
G659	116
G700	116
G701	116
G702	116
G766	109
G769	109
G770	109
G788	109
G789	109
G790	109
G814	109
G815	109
G816	109
G820	109
G821	109
G822	109
G823	109
G824	109
G825	109
G844	109
G845	109
G846	109
G847	109
G868	109
G869	109
G1004M	5868
G1004MR	5869
G1006M	5868
G1006MR	5869
G1010	109
G1010A	177
G1010M	5872
G1010MR	5873
G1110M	5890
G1110MR	5891
G1141D	116
G1146D	552
G1210D	552
G1212-152-04	5315
G1242	116
G1254	552
G1288	109
G1298-03	552
G1323-04	552
G1339-04	506
G1419-0	116
G1419B	116
G1428B	116
G1501	116
G1856	580
G2004M	5854
G2004MR	5855
G2006M	5854
G2006MR	5855
G2010M	5874
G2010MR	5875
G3010M	5876
G3010MR	5877
G3115	311
G4004M	5858
G4004MR	5859
G4006M	5858
G4006MR	5859
G4010M	5878
G4010MR	5879
G4090	230
G5006M	5860
G5006MR	5861
G5010M	5880
G5010MR	5881
G5019	113A
G6002	28
G6004M	5862
G6004MR	5863
G6006M	5862
G6006MR	5863
G6010M	5882
G6010MR	5883
G6013	121
G6016	131
G8004M	5866
G8004MR	5867
G8006M	5866
G8006MR	5867
G8010M	5886
G8010MR	5887
G8010R	5687
G9423	229
G9600	123AP
G9600(GE)	123AP
G9623	123AP
G9625	229
G9696	123AP
G10119	116
G13638	159
G16506	101
G59019	113A
G59122	113A
G101079	101
G390076S1	909
G390077S1	910
G390503S1	915
G390506-S1	940
G390507S2	923D
G395967	123AP
G395967-2	123AP
G657061	519
G657123	519
G-1010	109
GA500	5860
GA52829	100
GA53149	100
GA53242	100
GA53270	101
GA-10	102
GA-52829	126
GA-53149	126
GA-53242	126
GARE	137A
GB08D	116
GB-1	109
GBS3115F	5673
GBS3125F	5682
GBS3215F	5673
GBS3225F	5683
GBS3315F	5675
GBS3325F	5684
GBS3415F	5675
GC31	100
GC32	100
GC33	100
GC34	100
GC35	100
GC60	100
GC61	100
GC148	103A
GC181	100
GC182	100
GC250	102A
GC282	160
GC283	160
GC284	160
GC285	103A
GC286	103A
GC343	102A
GC360	100
GC387	160
GC388	160
GC389	160
GC408	102A
GC452	101
GC453	101
GC454	101
GC460	160
GC461	160
GC462	160
GC463	103A
GC464	102A
GC465	103A
GC466	102A
GC467	103A
GC520	102A
GC521	102A
GC532	100
GC551	102A
GC552	102A
GC578	102A
GC579	102A
GC580	102A
GC581	102A
GC588	102A
GC608	103A
GC609	103A
GC630	160
GC630A	160
GC631	160
GC639	102A
GC640	102A
GC641	121
GC680	102A
GC681	102A
GC682	102A
GC691	121
GC692	121
GC733B	102
GC783	123
GC784	123
GC856	102A
GC864	102A
GC1003	160
GC1004	160
GC1005	160
GC1006	160
GC1007	160
GC1034	101
GC1035	101
GC1036	101
GC1081	126
GC1092	160
GC1093	160
GC1093X3	160
GC1097	102A
GC1101	102A
GC1134	102A
GC1136	102A
GC1137	103A
GC1142	160
GC1143	102A
GC1144	123AP
GC1145	102A
GC1146	160
GC1148	160
GC1149	160
GC1150	102A
GC1155	160
GC1159	100
GC1182	160
GC1183	102A
GC1184	102A
GC1185	103A
GC1186	102A
GC1187	102A
GC1257	102A
GC1302	100
GC1422	102A
GC1423	103A
GC1573	160
GC1615-1	128
GC4022	100
GC4045	121
GC4057	121
GC4062	121
GC4087	121
GC4094	131
GC4097	121
GC4111	121
GC4125	121
GC4144	102A
GC4156	121
GC4213	176
GC4251	121
GC4267-2	121
GC4267-3	104
GC5000	102A
GC5010	102
GC5012	109
GCS9015D	159
GD1E	109
GD1P	109
GD4E	109
GD5E	109
GD6E	109
GD8E	109
GD10	109
GD11E	109
GD12	116
GD12E	109
GD13E	109
GD72E/3	109
GD72E/4	109
GD72E/5	160
GD73E/4	109
GD73E/5	109
GD74E/3	109
GD74E/4	109
GD74E/5	109
GD74LS00	74LS00
GD74LS04	74LS04
GD74LS06	74LS06
GD74LS21	74LS21
GD74LS32	74LS32
GD74LS74A	74LS74A
GD74LS125A	74LS125A
GD74LS138	74LS138
GD74LS157	74LS157
GD74LS158	74LS158
GD74LS175	74LS175
GD74LS240	74LS240
GD74LS244	74LS244
GD74LS245	74LS245
GD74LS373	74LS373
GD74S04	74LS04
GD74S08	74S08
GD74S74	74S74
GD74S188	74S188
GD74S288	74S288
GD74SL125A	74LS125A
GD101	519
GD102	519
GD400	109
GD401	109
GD402	109
GD403	109
GD404	109
GD405	109
GD406	109
GD409	109
GD510	109
GD556	109
GD663	109
GD1001	109
GD3638	177
GD3638-00	109
GD4066B	4066B
GD4066BD	4066B
GD5004	109
GD75188	75188
GD75189A	75189
GD-4-204BD	3025
GD-4-204CD	3020
GD-4-204GD	3021
GD-4-204RD	3024
GD-4-205CD	3020
GD-4-205GD	3024
GD-4-205RD	3025
GD-4-505RD	3007
GD-25	109
GD-26	109
GD-29	109
GD-30	109
GD-510	177
GDG00	177
GE5ZD-3.3	5111A
GE5ZD-3.6	5112A
GE5ZD-3.9	5113A
GE5ZD-4.3	5114A
GE5ZD-4.7	5115A
GE5ZD-5.1	5116A
GE5ZD-5.6	5117A
GE5ZD-5.8	5118A
GE5ZD-6.0	5118A
GE5ZD-6.2	5119A
GE5ZD-6.6	5120A
GE5ZD-6.8	5120A
GE5ZD-7.5	5121A
GE5ZD-8.0	5122A
GE5ZD-8.1	5122A
GE5ZD-8.2	5122A
GE5ZD-8.7	5123A
GE5ZD-9.1	5124A
GE5ZD-10	5125A
GE5ZD-11	5126A
GE5ZD-12	5127A
GE5ZD-13	5128A
GE5ZD-14	5129A
GE5ZD-15	5130A
GE5ZD-16	5131A
GE5ZD-17	5132A
GE5ZD-18	5133A
GE5ZD-19	5134A
GE5ZD-20	5135A
GE5ZD-21	5136A
GE5ZD-22	5136A
GE5ZD-24	5137A
GE5ZD-25	5138A
GE5ZD-27	5139A
GE5ZD-28	5140A
GE5ZD-30	5141A
GE5ZD-33	5142A
GE6GC1	113A
GE6GX1	115
GE538	539
GE4016	4016B
GE-1	100
GE-2	102
GE-3	121
GE-4	105
GE-5	101
GE-5ZD3.3	5011A
GE-6	101
GE-6GC1	113A
GE-6GX1	115
GE-7	101
GE-8	103
GE-9	160
GE-9A	160
GE-10	123AP
GE-10A	199
GE-11	107
GE-12	124
GE-13MP	104MP
GE-14	130
GE-15MP	130MP
GE-16	121
GE-17	123A
GE-18	128
GE-19	130
GE-20	123A
GE-21	129
GE-21A	129
GE-22	159
GE-23	175
GE-24MP	175
GE-25	127
GE-26	218
GE-27	171
GE-28	186
GE-29	187
GE-30	131
GE-31MP	131MP
GE-32	198
GE-33	182
GE-34	183
GE-35	53
GE-36	53
GE-37	164
GE-38	165
GE-39	161
GE-40	154
GE-43	155
GE-44	131
GE-45	195A
GE-46	237
GE-47	293
GE-47MP	293MP
GE-48	294
GE-49	226
GE-50	160
GE-51	160
GE-52	102A
GE-53	158
GE-54	158 + 103A
GE-55	182
GE-56	183
GE-57	184
GE-58	185
GE-59	103A
GE-60	161
GE-61	229
GE-62	199
GE-63	192A
GE-63A	192
GE-64	172A
GE-65	234
GE-66	152
GE-66A	152
GE-67	193A
GE-69	153
GE-69A	153
GE-72	162
GE-73	163A
GE-74	180
GE-75	181
GE-76	179
GE-77	280
GE-80	176
GE-81	289A
GE-82	159
GE-83	188
GE-84	189
GE-85	199
GE-86	107
GE-87A	193
GE-88	192A
GE-89	193
GE-90	614
GE-91	311
GE-121	121
GE-121MP	121MP
GE-123	123
GE-123AP	123AP
GE-124	124
GE-129	107
GE-130	116
GE-131MP	131MP
GE-163A	163A
GE-166	166
GE-167	167
GE-168	168
GE-169	169
GE-173BP	173BP
GE-178MP	178MP
GE-195A	195A
GE-208	160
GE-210	123AP
GE-211	123A
GE-212	199
GE-213	316
GE-214	316
GE-215	235
GE-216	236
GE-217	190
GE-218	189
GE-219	195A
GE-220	194
GE-221	288
GE-222	287
GE-223	288
GE-224	191
GE-225	240
GE-226	188
GE-227	189
GE-229	154
GE-230	154
GE-231	190
GE-232	157
GE-233	175
GE-234	218
GE-235	154
GE-236	299
GE-237	165
GE-238	165
GE-239	121
GE-240	105
GE-241	196
GE-243	128
GE-244	129
GE-245	160
GE-246	175
GE-247	186A
GE-248	187A
GE-249	191
GE-250	197
GE-251	198
GE-252	210
GE-253	211
GE-254	213
GE-255	390
GE-256	225
GE-257	228A
GE-258	232
GE-259	238
GE-261	278
GE-262	280
GE-262MP	280MP
GE-263	281
GE-265	284
GE-265MP	284MP
GE-266	285
GE-268	289
GE-268MP	289MP
GE-269	290
GE-270	295
GE-271	297
GE-271MP	297MP
GE-272	298
GE-273	300
GE-273MP	300MP
GE-275	302
GE-276	306
GE-277	311
GE-278	313
GE-279	315
GE-280	316
GE-281	317
GE-282	318
GE-283	319
GE-284	320
GE-288	320
GE-289A	289A
GE-292	318
GE-293	317
GE-294	278
GE-296	320
GE-297	278
GE-298	320
GE-299	278
GE-300	177
GE-301	228A
GE-302	291
GE-303	292
GE-304	257
GE-305	173BP
GE-309K	309K
GE-312	312
GE-314	314
GE-320	195A
GE-322	235
GE-323	323
GE-325	198
GE-326	265
GE-327	229
GE-328	328
GE-329	235
GE-330	326
GE-332	236
GE-333	235
GE-334	294
GE-335	195A
GE-337	236
GE-343	243
GE-344	244
GE-345	261
GE-346	175
GE-348	274
GE-349	263
GE-350	247
GE-351	245
GE-352	246
GE-353	262
GE-355	251
GE-357	271
GE-358	248
GE-359	252
GE-360	253
GE-361	259
GE-362	270
GE-367	367
GE-368	269
GE-375	375
GE-389	389
GE-414	177
GE-504	116
GE-504A	116
GE-505	125
GE-509	125
GE-509A	125
GE-510	125
GE-511	506
GE-512	156
GE-513	513
GE-514	519
GE-515	515
GE-516	522
GE-517	522
GE-518	500A
GE-519	532
GE-521	526A
GE-522	536A
GE-522A	536A
GE-523	522
GE-524	531
GE-525	532
GE-526	533
GE-527	500A
GE-528	523
GE-529	529
GE-531	125
GE-532	5817
GE-533	525
GE-534	534
GE-535	535
GE-536	537
GE-537	538
GE-538	539
GE-539	521
GE-540	530
GE-548	548
GE-550	5817
GE-551	551
GE-601	601
GE-663	192
GE-700	5513
GE-701	310
GE-702	308
GE-703	310
GE-704	231
GE-705	276
GE-720	1024
GE-721	1027
GE-723	1090
GE-724	1028
GE-730	730
GE-750	524V15
GE-812	812
GE-818	818
GE-822	822
GE-961	961
GE-962	962
GE-972	972
GE-973	973
GE-984	984
GE-1038	1038
GE-1127	1127
GE-1179	1179
GE-1192	1192
GE-1198	1198
GE-1211	1211
GE-1218	1218
GE-1219	1219
GE-1228	1228
GE-1231	1231
GE-1232	1232
GE-1257	1257
GE-3229	152
GE-3265	123A
GE-3638	109
GE-4000	4000
GE-4001	4001B
GE-4002	4002B
GE-4007	4007
GE-4011	4011B
GE-4012	4012B
GE-4013	4013B
GE-4015	4015B
GE-4016	4016B
GE-4016B	4016B
GE-4017	4017B
GE-4019	4019B
GE-4020	4020B
GE-4021	4021B
GE-4023	4023B
GE-4024	4024B
GE-4025	4025B
GE-4027	4027B
GE-4030	4030B
GE-4040	4040B
GE-4042	4042B
GE-4049	4049
GE-4050	4050B
GE-4051	4051B
GE-4052	4052B
GE-4055	4055B
GE-4081	4081B
GE-4300A1	8149
GE-4415A	8213
GE-4518	4518B
GE-5004	5838
GE-5005	5839
GE-5008	5842
GE-5009	5843
GE-5012	5848
GE-5013	5849
GE-5016	5854
GE-5017	5855
GE-5020	5858
GE-5021	5859
GE-5024	5862
GE-5025	5863
GE-5028	5868
GE-5029	5869
GE-5032	5874
GE-5033	5875
GE-5036	5878
GE-5037	5879
GE-5040	5882
GE-5041	5883
GE-5044	5890
GE-5045	5891
GE-5048	5944
GE-5056	5952
GE-5057	5953
GE-5060	98
GE-5061	98
GE-5062	98
GE-5062A	5062A
GE-5063A	5063A
GE-5064	5896
GE-5065	5897
GE-5068	5900
GE-5069	5901
GE-5072	5904
GE-5073	5905
GE-5076	5910
GE-5077	5911
GE-5096	5986
GE-5097	5987
GE-5100	5990
GE-5101	5991
GE-5104	5994
GE-5105	5995
GE-5108	6002
GE-5109	6003
GE-5128	6054
GE-5129	6055
GE-5132	6060
GE-5133	6061
GE-5136	6064
GE-5137	6065
GE-5140	6072
GE-5141	6073
GE-5142	6043
GE-5151A	5151A
GE-5155A	5155A
GE-5190A	5190A
GE-5304	5304
GE-5312	5312

PART NUMBER	NTE REPLACEMENT
GE-5314	5314
GE-5322	5322
GE-5400	5400
GE-5401	5401
GE-5402	5402
GE-5404	5404
GE-5414	5414
GE-5415	5415
GE-5442	5442
GE-5444	5444
GE-5448	5448
GE-5453	5453
GE-5455	5455
GE-5457	5457
GE-5463	5463
GE-5512	5512
GE-5642	5642
GE-5801	5801
GE-6063	177
GE-6366	116
GE-6400A	6400A
GE-6401	6401
GE-7400	7400
GE-7402	7402
GE-7404	7404
GE-7406	7406
GE-7408	7408
GE-7410	7410
GE-7413	7413
GE-7416	7416
GE-7417	7417
GE-7420	7420
GE-7427	7427
GE-7430	7430
GE-7432	7432
GE-7441	7441
GE-7447	7447
GE-7448	7448
GE-7451	7451
GE-7473	7473
GE-7474	7474
GE-7475	7475
GE-7476	7476
GE-7485	7485
GE-7486	7486
GE-7490	7490
GE-7492	7492
GE-74123	74123
GE-74145	74145
GE-74150	74150
GE-74154	74154
GE-74192	74192
GE-74193	74193
GE-74196	74196
GE-CR1	118
GE-FET-1	132
GE-FET-2	312
GE-FET-4	222
GE-FET-6	221
GE-M100	160
GE-X1	5483
GE-X3	5521
GE-X4	5543
GE-X5	5453
GE-X8	103
GE-X9	102A
GE-X10	6401
GE-X11	5072A
GE-X12	5673
GE-X13	6408
GE-X16	5485
GE-X16A1938	123AP
GE-X17	6402
GE-X18	186
GE-X36	116
GE-X66	109
GE-Z83	313
GEA114B	580
GEA-111	413
GEA-113	415
GEA-114	422
GEA-123	421
GEB100	5312
GEB101	5312
GEB102	5313
GEB104	5314
GEB106	5315
GEB108	5316
GEBR-206	5313
GEBR-425	5324
GEBR-600	169
GEBR-1000	170
GECR-1	118
GECR-3	120
GECR-5	503
GECR-6	504
GECR-7	505
GEDO5B850	109
GEFET-1	132
GEFET-2	312
GEFET-5	222
GEFR8	HVD-1
GEFR9	HVD-2
GEFR10	HVD-3
GEFR-4	HVD-4
GEFR-8	HVD-1
GEFR-9	HVD-2
GEFR-10	HVD-3
GEFR-12	HVD-12
GEIC-2	712
GEIC-3	705A
GEIC-4	714
GEIC-9	722
GEIC-10	708
GEIC-11	709
GEIC-12	703
GEIC-13	731
GEIC-14	721
GEIC-15	723
GEIC-16	737
GEIC-17	736
GEIC-18	790
GEIC-19	725
GEIC-20	780
GEIC-21	783
GEIC-24	744
GEIC-25	949
GEIC-27	804
GEIC-29	738
GEIC-30	739
GEIC-31	740A
GEIC-32	743
GEIC-33	791
GEIC-34	799
GEIC-35	804
GEIC-36	1004
GEIC-37	1010
GEIC-38	1006
GEIC-39	1121
GEIC-40	1122
GEIC-41	1080
GEIC-42	1005
GEIC-43	1003
GEIC-44	1053
GEIC-45	1054
GEIC-46	1057
GEIC-47	1055
GEIC-48	1056
GEIC-49	1058
GEIC-50	1060
GEIC-51	1061
GEIC-52	1062
GEIC-54	1064
GEIC-59	1072
GEIC-61	1181
GEIC-62	1137
GEIC-63	1073
GEIC-69	1002
GEIC-70	1227
GEIC-71	1158
GEIC-73	1094
GEIC-74	1215
GEIC-75	1179
GEIC-76	1217
GEIC-77	1009
GEIC-80	1180
GEIC-81	726
GEIC-82	1188
GEIC-83	726
GEIC-84	704
GEIC-87	1108
GEIC-88	1061
GEIC-90	1106
GEIC-91	1104
GEIC-92	1100
GEIC-93	1102
GEIC-94	1103
GEIC-95	1101
GEIC-96	1004
GEIC-97	749
GEIC-98	1080
GEIC-102	1022
GEIC-103	1087
GEIC-104	1085
GEIC-105	1128
GEIC-111	1130
GEIC-113	1243
GEIC-114	1236
GEIC-116	1047
GEIC-118	1046
GEIC-119	1124
GEIC-120	1089
GEIC-121	1049
GEIC-123	1050
GEIC-126	1091
GEIC-128	1142
GEIC-130	1092
GEIC-132	1079
GEIC-133	1050
GEIC-135	1052
GEIC-137	1184
GEIC-138	1140
GEIC-139	1185
GEIC-140	1082
GEIC-143	1061
GEIC-147	712
GEIC-148	712
GEIC-149	1004
GEIC-154	1237
GEIC-155	801
GEIC-156	1122
GEIC-157	1094
GEIC-158	1121
GEIC-159	1039
GEIC-160	1041
GEIC-161	1040
GEIC-162	1029
GEIC-164	1032
GEIC-167	1035
GEIC-168	1036
GEIC-169	1043
GEIC-171	1087
GEIC-172	912
GEIC-173	1171
GEIC-176	1187
GEIC-179	1155
GEIC-181	1234
GEIC-183	748
GEIC-184	1062
GEIC-185	909
GEIC-190	960
GEIC-191	964
GEIC-193	7474
GEIC-194	7401
GEIC-196	1160
GEIC-197	1081A
GEIC-199	1172
GEIC-201	1093
GEIC-202	1221
GEIC-203	1230
GEIC-205	704
GEIC-207	711
GEIC-210	727
GEIC-211	734
GEIC-213	742
GEIC-214	743
GEIC-215	744
GEIC-217	746
GEIC-218	747
GEIC-219	750
GEIC-220	778A
GEIC-222	780
GEIC-225	783
GEIC-228	787
GEIC-229	788
GEIC-231	791
GEIC-233	797
GEIC-236	784
GEIC-239	806
GEIC-240	807
GEIC-242	812
GEIC-244	815
GEIC-246	906
GEIC-247	967
GEIC-248	908
GEIC-249	909
GEIC-250	909D
GEIC-251	910
GEIC-252	910D
GEIC-253	911
GEIC-256	914
GEIC-257	916
GEIC-258	917
GEIC-259	923
GEIC-260	923D
GEIC-261	925
GEIC-262	940
GEIC-263	941
GEIC-264	941D
GEIC-265	941M
GEIC-267	947
GEIC-268	947
GEIC-269	955M
GEIC-273	1031
GEIC-274	1038
GEIC-275	1083
GEIC-276	1107
GEIC-278	1115
GEIC-279	1116
GEIC-280	1117
GEIC-281	1123
GEIC-285	1149
GEIC-287	1154
GEIC-288	903
GEIC-289	904
GEIC-290	905
GEIC-291	1242
GEIC-292	1248
GEIC-293	1263
GEIC-295	1223
GEIC-296	1224
GEIC-311	1098
GEIC-312	1096
GEIC-313	1126
GEIC-314	1135
GEIC-315	1165
GEIC-316	1166
GEIC-317	1233
GEIC-318	1135
GEIC-319	1110
GEIC-324	1179
GEIC-326	1192
GEIC-329	1211
GEIC-330	1218
GEIC-331	1219
GEIC-332	1228
GEIC-333	1231
GEIC-334	1232
GEL211AL1	708
GEL211F1	708
GEL239F2	721
GEL2111	708
GEL2111AL1	708
GEL2111F1	708
GEL2113	709
GEL2113AL1	709
GEL2113F1	709
GEMR-1	5874
GEMR-2	5990
GEMR-3	5545
GEMR-4	5474
GEMR-5	5455
GEMR-6	186
GEN11760	174
GER4001	125
GER4002	125
GER4003	125
GER4004	125
GER4005	125
GER4006	125
GER4007	125
GER-A	102A
GER-A-D	160
GES929	123AP
GES930	123AP
GES2221	123AP
GES2222	123AP
GES2222A	123A
GES2483	123AP
GES2646	6401
GES2906	159
GES2907	159
GES5305	46
GES5306	46
GES5307	46
GES5308	46
GES5368	123A
GES5369	123A
GES5370	123A
GES5371	123A
GES5372	290
GES5373	290
GES5374	290
GES5375	290
GES5447	289
GES5448	289
GES5449	123A
GES5450	123A
GES5451	123A
GES5810	123AP
GES5811	159
GES5812	123AP
GES5813	159
GES5814	123AP
GES5815	159
GES5816	123AP
GES5817	159
GES5818	123AP
GES5819	159
GES5821	159
GES5822	297
GES5823	159
GES5824	123AP
GES5825	123AP
GES5826	123AP
GES5827	123AP
GES6000	123A
GES6001	290
GES6002	123A
GES6003	290
GES6004	123A
GES6005	290
GES6006	123A
GES6007	290
GES6010	128
GES6011	129
GES6012	128
GES6014	128
GES6015	129
GES6016	128
GES6017	129
GES6218	287
GES6219	287
GES6220	287
GES6221	194
GES6224	123AP
GESP-1500	123A
GESP-1501	123A
GESP-1502	123A
GESP-1503	128
GESP-1504	233
GESP-1505	123A
GESP-1506	123A
GESP-1507	191
GESP-1508	196
GESP-1509	196
GESP-1510	197
GESP-1511	124
GESP-1512	154
GESP-1513	192A
GESP-1514	123A
GESP-1515	290
GESP-1516	197
GESP-1517	196
GESP-1518	238
GESP-1519	181
GESP-1520	196
GESP-1521	196
GESP-1522	128
GESP-1523	196
GESP-1524	196
GESP-1525	197
GESP-1526	238
GESP-1527	106
GESP-1528	198
GESP-1529	290
GESP-1530	129
GESP-1531	123A
GESP-1532	316
GESP-1533	129
GESP-1534	396
GESP-1535	133
GESP-1536	108
GESP-1537	228A
GESP-1538	165
GESP-1539	129
GESP-1540	161
GESP-1542	128
GESP-1701	712
GESP-1704	780
GESP-1707	731
GESP-1900	177
GESP-1901	5080A
GESP-1902	109
GESP-1903	145A
GESP-1904	177
GESP-1905	177
GESP-1905A	177
GESP-1907	5081A
GESP-1908	177
GESP-1909	109
GESP-1911	177
GESP-1912	109
GESP-2000	116
GESP-2001	116
GESS-2AV2	511
GESS-3A3	508
GESS-3AT2	509
GESS-3DB3	510
GESS-6DW4	512
GET0-50P	158
GET103	102A
GET113	102A
GET113A	102A
GET114	102A
GET572	121
GET671	160
GET672	160
GET672A	160
GET673	160
GET691	160
GET692	160
GET693	160
GET706	123AP
GET708	123AP
GET871	126
GET872	126
GET873	126
GET873A	126
GET874	126
GET875	126
GET880	100
GET881	100
GET882	100
GET883	126
GET884	102A
GET885	126
GET887	100
GET888	100
GET889	100
GET890	100
GET891	100
GET892	100
GET895	100
GET896	100
GET897	100
GET898	102
GET914	123AP
GET929	128
GET930	128
GET931	160
GET2221	123A
GET2221A	123A
GET2222	123A
GET2222A	123A
GET2369	123AP
GET2483	199
GET2904	159
GET2905	159
GET2906	159
GET2906A	159
GET2907	159
GET2907A	159
GET3013	123AP
GET3014	123AP
GET3562	199
GET3563	229
GET3638	159
GET3638A	159
GET3646	123AP
GET3903	123AP
GET3904	123AP
GET3905	159
GET3906	159
GET4125	159
GET4126	159
GET4870	6401
GET4871	6409
GET5116	160
GET5117	160
GET5305	172A
GET5306	172A
GET5307	172A
GET5308	172A
GET5308A	172A
GET-103	102
GET-113	102
GET-113A	102
GET-114	102
GET-572	121
GET-672	160
GET-672A	160
GET-673	160
GET-692	160
GET-873A	160
GET-883	160
GET0-50P	158
GEVR-100	977
GEVR-102	960
GEVR-105	961
GEVR-106	981
GEVR-108	964
GEVR-109	950
GEVR-111	966
GEVR-112	1903
GEVR-114	967
GEVR-115	923
GEVR-116	923
GEX8	103
GEX9	102
GEX36	116
GEX66	116
GEZD3.3	5066A
GEZD-3.3	5066A
GEZD-3.6	134A
GEZD-3.9	5067A
GEZD-4.3	5068A
GEZD-4.7	5069A
GEZD-5.0	135A
GEZD-5.1	135A
GEZD-5.6	136A
GEZD-6.0	5070A
GEZD-6.2	137A
GEZD-6.6	5071A
GEZD-6.8	5071A
GEZD-7.5	138A
GEZD-8.0	5072A
GEZD-8.1	5072A
GEZD-8.2	5072A
GEZD-8.7	5073A
GEZD-9.1	139A
GEZD-10	140A
GEZD-10.4	140A
GEZD-10-4	140A
GEZD-11	5074A
GEZD-11.5	141A
GEZD-12	142A
GEZD-13	143A
GEZD-14	144A
GEZD-15	145A
GEZD-16	5075A
GEZD-17	5076A
GEZD-18	5077A
GEZD-19	5078A
GEZD-20	5079A
GEZD-22	5080A
GEZD-24	5081A
GEZD-25	5082A
GEZD-27	146A
GEZD-28	5083A
GEZD-30	5084A
GEZD-33	147A
GEZD-35	5085A
GEZD-36	5085A
GEZD-39	5086A
GEZD-43	5087A
GEZD-47	5088A
GEZD-51	5089A
GEZD-55	148A
GEZD-56	5090A
GEZD-60	5091A
GEZD-62	149A
GEZD-68	5092A
GEZD-75	5093A
GEZD-82	150A
GEZD-87	5094A
GEZD-91	5095A
GEZD-100	5096A
GEZD-110	151A
GEZD-120	5097A
GEZD-130	5098A
GEZD-140	5099A
GEZD-150	5100A
GEZD-160	5101A
GEZD-170	5102A
GEZD-180	5103A
GEZD-190	5104A
GEZD-200	5105A
GEZJ252A	116
GEZJ252B	116
GF20	102
GF21	102
GF32	102
GF515	506
GF515-B	506
GFA03	558
GFA03L	558
GFA03R	558
GFB30B	580
GFB30C	580
GFB30E	580
GFB30G	580
GFB30G-FD1	580
GFB-30G	125
GFD10	552
GFD10B	552
GFD10C	552
GFD10E	552
GFD10G	552
GFE10	558
GFE10R	558
GFT44	160
GFT45	160
GFT3008/40	102
GGE-51	160
GGL-211	3010
GH1F	525
GH3F	506
GH3FLF	506
GH-1F	525
GH-3F	558
GH-35	519
GHSRUFLF	506
GI08B	116
GI1	100
GI2	102
GI3	126
GI4	102
GI5	101
GI6	101
GI7	101
GI8	103
GI9	105
GI10	123AP
GI237	125
GI411	116
GI420	116
GI501	116
GI750	5812
GI751	5812
GI752	5814
GI754	5814
GI756	5815
GI758	5817
GI760	5817
GI2401	6240
GI2401R	6244
GI2402	6240
GI2402R	6244
GI2403	6240
GI2403R	6244
GI2404	6240
GI2404R	6244
GI2711	123AP
GI2712	123AP
GI2713	123AP
GI2714	123AP
GI2715	123AP
GI2716	123AP
GI2921	123AP
GI2922	123AP
GI2923	123AP
GI2924	123AP
GI3002	116
GI3638	159
GI3638A	159
GI3641	123AP
GI3643	123AP
GI3644	159
GI3702	159
GI3703	159
GI3704	123AP
GI3705	123AP
GI3706	123AP
GI3707	123AP
GI3708	123AP
GI3709	123AP
GI3710	123AP
GI3711	123AP
GI3793	161
GI3992-17	116
GI6506	101
GI-1N4385	116
GI-100-1	116
GI-300D	116
GI-2711	123AP
GI-2712	123AP
GI-2713	194
GI-2714	123AP
GI-2715	161
GI-2716	161
GI-2921	161
GI-2922	161
GI-2923	161
GI-2924	199
GI-2925	199
GI-2926	319P
GI-3008	116
GI-3391	199
GI-3391A	199
GI-3392	199
GI-3393	199
GI-3394	199
GI-3395	199
GI-3396	199
GI-3397	199
GI-3398	199
GI-3402	194
GI-3403	123AP
GI-3404	194
GI-3405	123AP
GI-3414	194
GI-3415	123AP
GI-3416	123AP
GI-3417	123AP
GI-3566	194
GI-3605	161
GI-3606	161
GI-3607	161
GI-3638	194
GI-3638A	194
GI-3641	123AP
GI-3642	123AP
GI-3643	123AP
GI-3644	294
GI-3702	194
GI-3703	194
GI-3704	123AP
GI-3705	123AP
GI-3706	123AP
GI-3707	199
GI-3708	199
GI-3709	199
GI-3710	199
GI-3711	199
GI-3721	199
GI-3793	194
GI-3794	194
GI-3900	199
GI-3900A	199
GI-P100-D	116
GI-TVC3	120
GID	116
GIP100-D	156
GIP100D	116
GJ4M	116
GL30PG	3024
GL30PR	3007

PART NUMBER	NTE REPLACEMENT
GL31-AR	3007
GL31AR	3007
GL32AR	3007
GL32PG	3010
GL52PG	3024
GL56	3003
GL211	3010
GL317	956
GL324	987
GL339	834
GL348	948
GL393	943M
GL450	30001
GL451	30001
GL574	615P
GL1130	1773
GL3101A	1725
GL3101B	1725
GL3120	1728
GL3201	712
GL3301	1650
GL3320	1845
GL4550	3024
GL4558	778A
GL4950	3024
GL7805	960
GL7806	962
GL7808	964
GL7812	966
GL7815	968
GL7824	972
GL7905	961
GL7906	963
GL7908	965
GL7912	967
GL7915	969
GL7924	971
GL-3PY1	3011
GL-5AR1	3025
GL-5NC6	3024
GL-5PR6	3022
GL-5R04A	3065
GL-8R04	3056
GL-9R04	3052
GL-30PG	3024
GL-30PR	3007
GL-31AR	3007
GL-32AR	3007
GL-32PG	3010
GL-52PC	3024
GL-56	3003
GL-450	30001
GL-3201	712
GL-4950	3024
GLA39	134A
GLA39A	134A
GLA39B	134A
GLA47	135A
GLA47A	135A
GLA47B	135A
GLA51	135A
GLA51A	135A
GLA51B	135A
GLA56	136A
GLA56A	136A
GLA56B	136A
GLA62	137A
GLA62A	137A
GLA62B	137A
GLA91	139A
GLA91A	139A
GLA91B	139A
GLA100	140A
GLA100A	140A
GLA100B	140A
GLC555	955MC
GLC556	978C
GM0290	160
GM0380	108
GM0375	160
GM0376	160
GM0377	160
GM0378	168
GM1J2	125
GM3	156
GM3B	125
GM3Z	156
GM30A	6200
GM30B	6200
GM30D	6200
GM30G	6202
GM30J	6204
GM74LS78DP	74LS78
GM290	160
GM290A	160
GM308	161
GM378	160
GM378A	160
GM378RED	160
GM380	126
GM428	121
GM656A	160
GM760	159
GM770	107
GM875	160
GM876	160
GM877	160
GM878	160
GM878A	160
GM878B	160
GM71256	4256
GM71256-10	4256
GM-3	156
GM-3B	156
GM-3Y	156
GM-3Z	156
GM-770	107
GMA01	519
GMA01-BT	519
GMA01-L	177
GMA-01	519
GMA-01-BT	519
GMA-10-BT	519
GMB01B	519
GMB01BT	519
GMB74LS09DP	74LS09
GMB74LS92DP	74LS92
GMB74LS113DP	74LS113
GMB74LS114DP	74LS114
GMB74LS126DP	74LS126A
GMB74LS156DP	74LS156
GMB74LS158DP	74LS158
GMB74LS173DP	74LS173A
GMB74LS196DP	74LS196
GMB74LS197DP	74LS197
GMB74LS283DP	74LS283
GMB74LS293DP	74LS293
GMB74LS365DP	74LS365A
GMB74LS374DP	74LS374
GME040-1	159
GME0404	106
GME0404-1	106
GME0404-2	106
GME404-1	106
GME1001	123AP
GME1002	123AP
GME2001	123AP
GME2002	123AP
GME3001	108
GME3002	108
GME4001	123AP
GME4002	123AP
GME4003	123AP
GME6001	107
GME6002	107
GME6003	123AP
GME9001	108
GME9002	108
GME9021	108
GME9022	108
GM0290	160
GM0375	160
GM0376	160
GM0377	160
GM0378	160
GM0380	161
GM0-380	123AP
G00535	116
G03-007C	186
G03-404-B	129
G04-041B	123AP
G04-701-A	104
G04-703-A	176
G04-704-A	131
G04-711-E	158
G04-711-F	158
G04-711-G	158
G04-711-H	158
G05-003-A	123AP
G05-003-B	123AP
G05-004A	107
G05-010-A	123AP
G05-050-C	123AP
G05-011-A	123AP
G05-015-C	123AP
G05-015-D	128
G05-034-D	128
G05-035-D	199
G05-035-D,E	199
G05-035-E	199
G05-036-C,D,E	123AP
G05-036B	123AP
G05-036C	123AP
G05-036D	128
G05-036E	123AP
G05-037B	123AP
G05-055-D	128
G05-413A	128
G06-714C	186
G06-717-B	186
G08-005L	133
G01036	139A
G01209	177
G01211	177
G01803	177
G03007	159
G03014	159
G05036	123AP
G05059	123AP
G05415	293
G05705	152
G09007	1103
G09009	1006
G09015	1003
G00-003-A	109
G00-502-A	116
GP05A	116
GP08-D	156
GP08B	116
GP08D	156
GP08DPKG23	156
GP1	116
GP1SBL	125
GP2-345	177
GP2-345/MA161	177
GP10D	552
GP10M	125
GP15	125
GP15B	125
GP15BL	125
GP15D	125
GP15G	125
GP15J-16	125
GP20D	125
GP20G	552
GP25G	116
GP30A	5800
GP30B	5801
GP30D	5802
GP30G	5804
GP30JG	5806
GP80A	581
GP80B	581
GP80D	581
GP80G	581
GP139	102A
GP139A	102A
GP139B	102A
GP230	116
GP250	116
GP252	156
GP290	176
GP420	121
GP512	558
GP515	558
GP604	5814
GP1432	121
GP1493	121
GP1494	121
GP1622	105
GP1882	121
GP2354	109
GP2364	109
GP-08B	116
GP-08D	156
GP-1	116
GP-20D	156
GP-25B	116
GP-30B	5801
GP-30D	5809
GP-30DL	5802
GP-300	5802
GP-354	109
GP-859	104
GPM1NA	109
GPM1NB	109
GPM2NA	109
GP08D	156
GPT16	104
GPT-16	121
GR47MP	293MP
GR102	224
GR1217F	914
GRASS-R2982	130
GRF-3	132
GRP-10D	552
GRP-10J	552
GRU2A	552
GRU-2A	506
GRV2A	506
GS73E/3	109
GS612	3032
GS670	3032
GS2012	152
GS2012(G)	152
GS2012(H)	152
GS2012G	152
GS2012H	152
GS2013	54
GS2013(G)	152
GS2013(H)	152
GS2013G	152
GS2013H	152
GS2014	376
GS2014(G)	198
GS2014-G	198
GS2014G	198
GS2014H	198
GS2014I	198
GS2015(D)	375
GS2015(E)	375
GS2015D	375
GS2015E	375
GS2015H	375
GS2016(H)	375
GS2016-H	375
GS2016H	375
GS2017	376
GS2017(G)	85
GS2017(H)	85
GS2017-G	85
GS2017-H	376
GS2017/H	376
GS2017A	376
GS2017G	376
GS2017H	376
GS2019	152
GS2052	153
GS2052(G)	153
GS2052(H)	153
GS2052D	153
GS2052G	153
GS2052H	153
GS2053	55
GS2053-G	153
GS2053G	153
GS9010-G	287
GS9011(I)	123AP
GS9011(J)	123AP
GS9011-F	123AP
GS9011F	123AP
GS9011I	123AP
GS9011J	123AP
GS9012G	159
GS9012H	159
GS9012I	159
GS9014	123AP
GS9014-J	123AP
GS9014-K	123AP
GS9014/1	123AP
GS9014H	123AP
GS9014H/1	85
GS9014I	123AP
GS9014J	123AP
GS9014K	123AP
GS9014Y	85
GS9015H	159
GS9015I	159
GS9015J	159
GS9018-G	123AP
GS9018F	123AP
GS9018G	123AP
GS9019	287
GS9019G	287
GS9019H	287
GS9019H/1	85
GS9019I	287
GS9019J	287
GS9022(G)	288
GS9022(H)	288
GS9022-G	288
GS9022-H	288
GS9022F	288
GS9022G	288
GS9022H	288
GS9022I	288
GS9022J	288
GS9023	123AP
GS9023(H)	123AP
GS9023-1/H	123AP
GS9023-H	123AP
GS9023G	123AP
GS9023H	123AP
GS9023I	123AP
GS9023J	123AP
GS9023K	123AP
GS9024-1	85
GS9024J	123AP
GS9024J/K	123AP
GS9024K	123AP
GS9025(J)	123AP
GS9025H	123AP
GS9025I	123AP
GS9025J	123AP
GS9027	287
GS9027G	399
GS9027H	399
GS9032H	288
GS9032I	288
GS9032J	288
GS9033H	287
GS9033I	287
GS9033J	287
GS20141	198
GS90111	123AP
GS90111J	123AP
GS90231	123AP
GS90231H	123AP
GS-I9011	123AP
GSA15	125
GSA15B	125
GSA15C	125
GSA15E	125
GSA15G	125
GSA30	156
GSA30B	156
GSA30C	156
GSA30E	156
GSA30G	156
GSA30J	156
GSB10	125
GSB10B	116
GSB10C	116
GSB10E	116
GSB10G	116
GSB10J	125
GSB10L	125
GSH9014I	123AP
GSH9014J	123AP
GSH9032	288
GSH-9025	123AP
GSK9014	85
GSK9014H/1	123AP
GSM51	116
GSM52	116
GSM53	116
GSM54	116
GSM482	116
GSM483	116
GSR1	125
GT1	160
GT2	160
GT3	160
GT11	100
GT12	100
GT13	100
GT14	102A
GT14H	102A
GT15T5	145A
GT18	102A
GT20	102A
GT20H	102A
GT20R	102A
GT24H	160
GT31	102A
GT32	102A
GT33	102A
GT34	102A
GT34HV	102A
GT34S	100
GT35	103A
GT40	160
GT41	102A
GT42	102A
GT43	126
GT44	102A
GT45	102A
GT46	126
GT47	126
GT74	102A
GT75	102A
GT81	102A
GT81H	100
GT81HS	102A
GT81R	102A
GT82	102A
GT83	100
GT87	100
GT88	100
GT100	100
GT109	102A
GT109R	102A
GT122	102A
GT123	102A
GT132	102A
GT153	100
GT167	103A
GT210H	100
GT222	102A
GT229	101
GT269	100
GT336	103A
GT364	103A
GT365	103A
GT366	103A
GT751	102A
GT758	102A
GT759	102A
GT759R	102A
GT760	102A
GT760R	102A
GT761	100
GT761R	100
GT762	100
GT762R	100
GT763	102A
GT764	100
GT766	100
GT766A	100
GT792	101
GT832	100
GT903	103A
GT904	101
GT905	101
GT905R	101
GT947	101
GT948	101
GT948R	103
GT949	101
GT949R	101
GT1200	101
GT1201	101
GT1202	101
GT1223	102A
GT1604	100
GT1605	100
GT1606	100
GT1607	100
GT1608	101
GT1609	101
GT1644	159
GT1658	103A
GT1665	102A
GT2693	100
GT2694	100
GT2695	100
GT2696	102A
GT2765	101
GT2766	101
GT2767	101
GT2768	103A
GT2883	102A
GT2884	101
GT2885	102A
GT2886	101
GT2887	102A
GT2888	101
GT2906	101
GT3150	101
GT5116	126
GT5117	126
GT5148	126
GT5149	126
GT5151	126
GT5153	126
GT-34HV	126
GT-34S	102
GT-35	103
GT-66	126
GT-109	102
GT-269	102
GT-759R	102
GT-760R	102
GT-761R	102
GT-762R	102
GT-903	103
GT-905	103
GT-947	103
GT-1200	101
GTE1	100
GTE2	100
GTE-2	102
GTJ33141	126
GTJ33229	126
GTJ33230	126
GTJ33231	102A
GTJ33232	102A
GTJ33350	112
GTV	100
GTX2001	121
GTX-2001	121
GU1F	551
GU3	552
GU3A	552
GU3B	558
GU3C	552
GU3SZ	5802
GU3Z	552
GU-1F	551
GU-3	552
GU-3A	552
GU-3B	558
GU-3C	558
GU-3SZ	5802
GU-3Z	552
GV5760	177
GV6063	123AP
GVL 20077	123AP
GVL20077	123AP
GVL20226	519
GVL20265	519
GVL20327-1	519
GX9027G	399
GXI3.3G	5066A
GXI3.6	134A
GXI3.9	5067A
GXI4.3	5068A
GXI4.7	5069A
GXI5.1	135A
GXI5.6	136A
GXI6.2	137A
GXI6.8	5071A
GXI7.5	138A
GXI8.2	5072A
GXI9.1	139A
GXI10	140A
GXI11	5074A
GXI12G	142A
GXI14	144A
GXI15	145A
GXI20G	5079A
GXI22	5080A
GXI24	5081A
GXI26	146A
GXI27	146A
GXI29	5084A
GXI33G	147A
GXI36	5085A
GXI39	5086A
GXI43	5087A
GXI47	5088A
GXI51	5089A
GXI55	148A
GXI56	5090A
GXI62L	149A
GXI68	5092A
GXI82	150A
GXI91	5095A
GXI111	151A
GXI115	141A
GXI120	5097A
GXI128	143A
GXI130	5089A
GXI140	5099A
GXI150G	5100A
GXI160	5101A
GXI161	5075A
GXI170	5102A
GXI178	5077A
GXI180	5103A
GXI190	5104A
GXI200	5105A
GXI200G	5105A
GYMTZ9.1-C	5018A
GYW76	116
GZ1-3.3G	5066A
GZ1-3.6	5066A
GZ1-3.9	5067A
GZ1-4.3	5068A
GZ1-4.7	5069A
GZ1-5.1	135A
GZ1-5.6	136A
GZ1-6.2	137A
GZ1-6.8	5071A
GZ1-7.5	138A
GZ1-8.2	5072A
GZ1-9.1	139A
GZ1-10	140A
GZ1-11	5074A
GZ1-12G	142A
GZ1-14	144A
GZ1-15	145A
GZ1-20G	5079A
GZ1-22	5080A
GZ1-24	5081A
GZ1-26	146A
GZ1-27	146A
GZ1-29	5084A
GZ1-33G	147A
GZ1-39	5086A
GZ1-43	5087A
GZ1-47	5088A
GZ1-51	5089A
GZ1-55	148A
GZ1-56	5090A
GZ1-62P	149A
GZ1-68	5092A
GZ1-91	5095A
GZ1-110A	151A
GZ1-115G	141A
GZ1-120	5097A
GZ1-127	143A
GZ1-130G	5098A
GZ1-140	5099A
GZ1-150G	5100A
GZ1-160	5101A
GZ1-161	5075A
GZ1-170	5102A
GZ1-178	5077A
GZ1-180	5103A
GZ1-190	5104A
GZ1-200	5105A
GZ1-200G	5105A
GZ4.3	5068A
GZ5.1	135A
GZ6.2	137A
GZ9.1	139A
GZ27	146A
GZ33A	5203A
GZ33AR	5203AK
GZA056U	5011A
GZA062Y	137A
GZA2.4	5000A
GZA2.4Z	5000A
GZA2.7	5002A
GZA2.7X	5002A
GZA3.0	5004A
GZA3.3	5005A
GZA3.3X	5005A
GZA3.6	5006A
GZA3.9	5007A
GZA3.9(Y)	5007A
GZA3.9-X	5007A
GZA3.9Y	5007A
GZA4.3	5008A
GZA4.3-Y-BT	5068A
GZA4.3Y	5068A
GZA4.7	5009A
GZA4.7-X-BT	5009A
GZA4.7X	5009A
GZA4.7Z	5009A
GZA5.1	5010A
GZA5.1-BT	5010A
GZA5.1-X-BT	5010A
GZA5.1-Y-BT	5010A
GZA5.1-Y-BT-T	5010A
GZA5.1L	5010T1
GZA5.1U	5010T1
GZA5.1X	5010A
GZA5.1X-BT	5010A
GZA5.1Y	5010A
GZA5.1Z	5010A
GZA5.6	5011A
GZA5.6-4-BT	5011A
GZA5.6-Y-BT	5011A
GZA5.6L	5011T1
GZA5.6U	5011T1
GZA5.6Y	5011A
GZA6.2	5013A
GZA6.2-BT	5013A
GZA6.2-X	5013A
GZA6.2-Y	5013A
GZA6.2-Y-BT	5013A
GZA6.2-Z-BT	5013T1
GZA6.2BT	5013A
GZA6.2L	5012A
GZA6.2U	5013A
GZA6.2X	5013A
GZA6.2Y	5013A
GZA6.2Y-BT	5013A
GZA6.2Z	5013T1
GZA6.8-4-BT	5014A
GZA6.8-Y	5014A
GZA6.8-Y-BT	5014A
GZA6.8L	5014A
GZA6.8U	5014A
GZA6.8Y	5014A
GZA6.8Z	5014A
GZA6.84	5014A
GZA7.5	5015A
GZA7.5-Y	5015A
GZA7.5-Z-BT	5015A
GZA7.5L	5015A
GZA7.5U	5015A
GZA7.5V	5015A
GZA7.5X	5015A
GZA7.5Y	5015A
GZA7.5Z	5015A
GZA8.2	5016A
GZA8.2-Y	5016A
GZA8.2L	5016A
GZA8.2U	5016A
GZA9.1	5017A
GZA9.1-Z	5018A
GZA9.1E	5018A
GZA9.1L	5017A
GZA9.1U	5017A
GZA9.1Z	5018A
GZA10	5019A
GZA10-Y	5019A
GZA10L	5019T1
GZA10U	5019T1
GZA10Y	5019A
GZA10Z	5019A
GZA11	5020A
GZA11-Y-BT	5020A
GZA11BT	5020A
GZA11L	5020A

PART NUMBER	NTE REPLACEMENT
GZA11U	5020A
GZA11X	5020A
GZA11Y	5020A
GZA11YBT	5020A
GZA11Z	5020A
GZA12	5021A
GZA12-Y-BT	5021T1
GZA12BT	5021A
GZA12L	5021T1
GZA12U	5021T1
GZA12X	5021A
GZA12Y	5021T1
GZA12YBT	5021A
GZA13	5022A
GZA13-A-B1	5022A
GZA13-X-BT	5022A
GZA13-Y	5022A
GZA13-Y-BT	5022A
GZA13L	5022A
GZA13U	5022A
GZA13X	5022A
GZA13Y	5022A
GZA13Z	5022A
GZA15	5024A
GZA15L	5024A
GZA15U	5024A
GZA16	5025A
GZA16-Y	5025A
GZA16L	5025A
GZA16U	5025A
GZA16Y	5025A
GZA18	5027A
GZA18L	5027A
GZA18U	5027A
GZA20	5029A
GZA20-X-BT	5029A
GZA20L	5029A
GZA20U	5029A
GZA20X	5029A
GZA22	5030A
GZA22L	5030A
GZA22U	5030A
GZA24	5031A
GZA24L	5031A
GZA24U	5031A
GZA27	5033A
GZA27-Y	5033A
GZA27-Y-BT	5033A
GZA27BT	5033A
GZA27X	5033A
GZA27Y	5033A
GZA27YBT	5033A
GZA30	5035A
GZA30-Y-BT	5035A
GZA30BT	5035A
GZA30Y	5035A
GZA33	5036A
GZA36	5037A
GZA36-Y	5037A
GZA36Y	5037A
GZA39	5038A
GZA39-Y	5038A
GZA43	5039A
GZA47	5040A
GZA51	5041A
GZA-12L	5021A
GZA-27.0Z	5033A
GZA-27.0Z	5033A
GZA-27-0Z	5033A
GZA-27X	5033A
GZB3.6B	5006A
GZB9.1B	139A
GZB12B	142A
GZB27C	5083A
GZM20-B2	5029A
GZM24-B2	5031A
H08A05	597
H08A10	597
H08A15	597
H08A20	597
H08A30	598
H08A40	598
H08A50	598
H08A60	598
H087	109
H089	142A
H091	109
H1V	108
H1Z	552
H3-443-970	4164
H5A3	6354
H5B3	6354
H5C3	6354
H5D3	6354
H5E3	6354
H5F3	6354
H5G3	6354
H5H3	6356
H5K3	6356
H5M3	6358
H5N3	6358
H6A3	6354
H6A3R	6355
H6B3	6354
H6B3R	6355
H6C3	6354
H6C3R	6355
H6D3	6354
H6D3R	6355
H6E3	6354
H6E3R	6355
H6F3	6354
H6F3R	6355
H6G3	6354
H6G3R	6355
H6H3	6356
H6H3R	6357
H6K3	6356
H6K3R	6357
H6M3	6358
H6M3R	6359
H6N3	6358
H6N3R	6359
H6P3	6358
H6P3R	6359
H6R3	6362
H6R3R	6363
H7-7B-2	5014A
H10	102A
H11A1	3041
H11A2	3041
H11A3	3041
H11A4	3041
H11A5	3041
H11A520	3041
H11A550	3041
H11A5100	3041
H11AA1	3089
H11AA2	3089
H11B1	3084
H11B2	3084
H11B3	3084
H11B255	3083
H11C1	3046
H11C2	3046
H11C3	3046
H11C4	3091
H11C5	3091
H11C6	3091
H11D1	3088
H11D2	3088
H11D3	3088
H11D4	3088
H11F1	3085
H11F2	3085
H11F3	3085
H11J1	3047
H11J2	3047
H11J3	3047
H11J4	3047
H11J5	3047
H11L1	3090
H12	105
H12A	105
H13A1	3100
H15A1	3081
H15A2	3081
H15B1	3082
H15B2	3082
H16C05	599
H16C10	599
H16C15	599
H16C20	599
H20B1	3103
H20B2	3103
H21A1	3100
H21A2	3100
H21A3	3100
H21A4	3100
H21A5	3100
H21A6	3100
H21B1	3101
H21B2	3101
H21B3	3101
H21B4	3101
H21B5	3101
H21B6	3101
H22A1	3102
H22A2	3102
H22A3	3102
H22A4	3102
H22A5	3102
H22A6	3102
H22B1	3103
H22B2	3103
H22B3	3103
H22B4	3103
H22B5	3103
H22B6	3103
H24A2	3081
H24B2	3082
H50	116
H100	116
H101	113A
H102	123AP
H103A	121
H103D1	9671
H103D2	9671
H103D6	9671
H104	123AP
H104D1	9660
H104D2	9660
H104D6	9660
H109	156
H112D1	9681
H112D2	9681
H112D6	9681
H118D1	9680
H118D2	9680
H118D6	9680
H122D2	9668
H122D6	9668
H142	177
H200	116
H203B1	9671
H204B1	9660
H212B1	9681
H215	730
H218B1	9680
H221	783
H221(GE)	783
H222B1	9668
H254E4	116
H284D4	552
H300	116
H316	109
H386-9	505
H386C1D2Y	505
H400	116
H442	108
H445-2	513
H475	116
H484	513
H484-1	513
H500	116
H501	113A
H585	116
H598	503
H598-10	503
H600	116
H614	109
H615	113A
H616	116
H617	116
H618	116
H619	116
H620	116
H621	125
H622	118
H623	177
H624	109
H625	116
H626	116
H685	548
H685-1	548
H685-2	548
H685-3	548
H781	116
H783	116
H800	125
H815	506
H816	504
H852-4	548
H881	116
H889	177
H890	507
H891	116
H931	123AP
H932	154
H933	123AP
H934	123AP
H1000	125
H1153	513
H1153-1	513
H1153-3	513
H1153-4	513
H1567	123AP
H7126-3	116
H7618	188
H8287	109
H8287-4	109
H8513	177
H9423	123AP
H9618	123AP
H9623	108
H9625	108
H9696	123AP
H10174	116
H20052	116
H-00005	142A
H-00008	116
H-00012	139A
H-00018	116
H-484	513
H-881	125
H-1567	123AP
H-DX0038CE	116
H-DX0046CE	519
H-DX0086TA	552
H-DX0105TA	552
H-DX0181CE	580
H-DX0248CE	552
H-EX0019GE	5024A
H-EX0021TA	5020A
H-EX0047CE	5021A
H-EX0049CE	5010A
H-EX0089CE	5016A
H-EX0091CE	5080A
H-EX0247CE	5013A
H-IX0065CE	1550
HA00052	100
HA00053	100
HA00562	290
HA12	160
HA15	100
HA30	160
HA49	100
HA50	116
HA52	126
HA53	126
HA54	102A
HA56	102A
HA70	160
HA100	116
HA102	126
HA103	126
HA104	126
HA200	116
HA201	126
HA202	100
HA235	126
HA235A	160
HA240	160
HA266	160
HA267	160
HA269	160
HA300	116
HA330	126
HA342	126
HA350	160
HA353	160
HA354	160
HA400	116
HA471	126
HA500	116
HA505	153
HA525	160
HA600	116
HA800	125
HA1000	125
HA1040	160
HA1101	726
HA1102	726
HA1103	704
HA1104	704
HA1108	1061
HA1117	1122
HA1118	1094
HA1119	1121
HA1124	712
HA1124D	712
HA1124DS	712
HA1124S	712
HA1124Z	712
HA1125	712
HA1125#	712
HA1125A	712
HA1126	1004
HA1126-D	1004
HA1126D	1004
HA1126DW	1004
HA1127	912
HA1128	712
HA1128E	712
HA1133	730
HA1137	788
HA1137P	788
HA1137W	788
HA1139	749
HA1139A	744
HA1140	1080
HA1141	712
HA1150	801
HA1151	1237
HA1154	712
HA1156	801
HA1156-6C	801
HA1156H	801
HA1156W	801
HA1156WP	801
HA1157	1122
HA1158	1094
HA1158-0	1094
HA1158-O	1094
HA1159	1121
HA1196	1484
HA1197	1214
HA1199	1290
HA1201	1039
HA1202	1041
HA1203	1042
HA1211	1040
HA1301	903
HA1302	784
HA1306	1029
HA1306P	1029
HA1306P-U	1029
HA1306PU	1029
HA1306U	1029
HA1306W	1029
HA1306WU	1029
HA1310	1031
HA1311	1032
HA1311W	1032
HA1314	1035
HA1316	1036
HA1318	1038
HA1318P	1038
HA1318P-U	1038
HA1318PU	1038
HA1318PU-1	1038
HA1318PU-2	1038
HA1318PU-3	1038
HA1319	1043
HA1350(TRANS)	102A
HA1353	1080
HA1360	102A
HA1364	1231
HA1377	1398
HA1385	1429
HA1385A	1429
HA1388	1399
HA1389	1392
HA1389R	1393
HA1392	1606
HA1393	1602
HA1398	1395
HA1406	1660
HA1457	1666
HA2001	133
HA2010	133
HA2190	160
HA2356	160
HA3210	160
HA3480	160
HA3670	160
HA4400	160
HA5001	101
HA5002	101
HA5003	101
HA5005	101
HA5009	101
HA5010	103A
HA5011	101
HA5012	101
HA5014	101
HA5016	101
HA5020	101
HA5021	101
HA5022	101
HA5023	101
HA5024	101
HA5025	101
HA5026	101
HA7206	194
HA7207	194
HA7501	159
HA7502	159
HA7506	159
HA7507	159
HA7510	159
HA7520	193
HA7521	193
HA7522	193
HA7523	193
HA7524	193
HA7526	193
HA7527	193
HA7528	193
HA7530	129
HA7531	129
HA7532	294
HA7533	159
HA7534	159
HA7535	288
HA7536	159
HA7537	159
HA7538	159
HA7539	288
HA7540	288
HA7541	288
HA7542	288
HA7543	159
HA7597	159
HA7598	159
HA7599	159
HA7630	129
HA7631	129
HA7632	129
HA7633	159
HA7723	193
HA7730	193
HA7732	193
HA7734	193
HA7735	193
HA7736	193
HA7737	193
HA7804	159
HA7806	159
HA7808	159
HA7810	159
HA7815	159
HA9048	194
HA9049	194
HA9054	194
HA9055	194
HA9056	194
HA9057	194
HA9058	194
HA9059	194
HA9078	194
HA9079	194
HA9500	106
HA9501	106
HA9502	106
HA9531	194
HA9531A	194
HA9532	194
HA9532A	194
HA11107	712
HA11123	1527
HA11211	1486
HA11215	1469
HA11215A	1469
HA11219	1543
HA11221	1492
HA11223	1482
HA11223W	1482
HA11225	1488
HA11226	2000
HA11227	1565
HA11229	1575
HA11235	1550
HA11244	1544
HA11247	1296
HA11251	1490
HA11401	1401
HA11409	1593
HA11412	1473
HA11412A	1473
HA11414	1403
HA11423	1471
HA11431	1589
HA11431NT	1589
HA11436	1650
HA11436A	1650
HA11440A	1725
HA11446	1650
HA11510	7007
HA11510NT	7007
HA11701	1585
HA11703	1595
HA11706	1597
HA11711	1591
HA11714	1600
HA11715	1554
HA12002	1635
HA12003	1226
HA12013	1465
HA12045	1633
HA12411	1579
HA12412	1559
HA12413	1557
HA12413-003	1557
HA13102	1398
HA13403V	1893
HA13421	7005
HA16617P	2021
HA17094PS	928M
HA17358	928M
HA17393	943M
HA17458	778A
HA17555	955M
HA17555PS	955M
HA17558	778A
HA17723	923D
HA17741	941M
HA17741M	941
HA17805	960
HA17805P	960
HA17806P	962
HA17808	964
HA17812	966
HA17812P	966
HA17904	928M
HA17904PS	928M
HA-00102	100
HA-00610	159
HA-0054	106
HA-00354	160
HA-00495	159
HA-00496	185
HA-00564	234
HA-00634	187
HA-00636	187
HA-00643	193
HA-00699	153
HA-00733	234
HA-1	506
HA-12	100
HA-15	126
HA-49	126
HA-52	100
HA-53	100
HA-101	126
HA-201	102
HA-234	160
HA-234B	160
HA-235A	160
HA-235C	160
HA-268	160
HA-269	126
HA-330	102
HA-350	126
HA-350A	126
HA-353	126
HA-353C	126
HA-354	126
HA-354B	126
HA-505	187
HA-1202	1041
HA-1306P	1029
HAB100	156
HAM-1	102A
HAR10	116
HAR15	116
HAR20	116
HAW1183B	176
HAW1183C	176
HB2	116
HB3	116
HB32	102A
HB33	102A
HB54	102A
HB55	102A
HB56	102A
HB75	102A
HB75C	102A
HB77	102A
HB77B	102A
HB77C	102A
HB156	102A
HB156C	102A
HB171	102A
HB172	102A
HB175	102A
HB176	102A
HB178	102A
HB186	102A
HB187	102A
HB263	102A
HB270	102A
HB324	158
HB365	158
HB367	131
HB415	158
HB422	126
HB459	102A
HB461	176
HB475	158
HB8030	152
HB-00303	102
HB-00405	158
HB-00054	102A
HB-00056	102A
HB-00370	102
HB-00156	158
HB-00171	102A
HB-00172	102A
HB-00173	102A
HB-00175	102A
HB-00176	102A
HB-00178	102
HB-00186	102A
HB-00187	102A
HB-00324	158
HB-00564	187
HB-7B	5071A
HB-12B	143A
HB-32	126
HB-33	126
HB-54	102
HB-56	102
HB-75B	102
HB-77C	102
HB-85	102A
HB-156	102
HB-172	102A
HB-173	102A
HB-175	102A
HB-186	126
HB-187	126
HB-475	158
HBC4000AD	4000
HBC4000AF	4000
HBC4000AK	4000
HBC4001AD	4001B
HBC4001AF	4001B
HBC4001AK	4001B
HBC4002AD	4002B
HBC4002AF	4002B
HBC4002AK	4002B
HBC4008AD	4008B
HBC4008AF	4008B
HBC4008AK	4008B
HBC4011AD	4011B
HBC4011AF	4011B
HBC4011AK	4011B
HBC4012AD	4012B
HBC4012AF	4012B
HBC4012AK	4012B
HBC4013AD	4013B
HBC4013AF	4013B
HBC4013AK	4013B
HBC4017AD	4017B
HBC4017AF	4017B
HBC4017AK	4017B
HBC4018AD	4018B
HBC4018AF	4018B
HBC4018AK	4018B
HBC4020AD	4020B
HBC4020AF	4020B
HBC4020AK	4020B
HBC4022AD	4022B
HBC4022AE	4022B
HBC4022AF	4022B
HBC4022AK	4022B
HBC4023AD	4023B
HBC4023AF	4023B
HBC4023AK	4023B
HBC4024AD	4024B
HBC4024AF	4024B
HBC4024AK	4024B
HBC4025AD	4025B
HBC4025AF	4025B
HBC4025AK	4025B
HBC4027AD	4027B
HBC4027AF	4027B
HBC4027AK	4027B
HBC4028AD	4028B
HBC4028AF	4028B
HBC4028AK	4028B
HBC4029AD	4029B
HBC4029AF	4029B
HBC4029AK	4029B
HBC4030AD	4030B
HBC4030AF	4030B
HBC4030AK	4030B
HBC4040AD	4040B
HBC4040AF	4040B
HBC4040AK	4040B
HBC4042AD	4042B
HBC4042AF	4042B
HBC4042AK	4042B
HBC4043AD	4043B
HBC4043AF	4043B
HBC4043AK	4043B
HBC4044AD	4044B
HBC4044AF	4044B
HBC4044AK	4044B
HBC4055AD	4055B
HBC4055AF	4055B
HBC4055AK	4055B
HBC4060AD	4060B
HBC4060AF	4060B
HBC4060AK	4060B
HBF4000AE	4000
HBF4000AF	4000
HBF4001	4001B
HBF4001A	4001B
HBF4001AE	4001B
HBF4001AF	4001B
HBF4002	4002B
HBF4002A	4002B
HBF4002AE	4002B
HBF4002AF	4002B
HBF4008AE	4008B
HBF4008AF	4008B

PART NUMBER	NTE REPLACEMENT
HBF4011	4011B
HBF4011A	4011B
HBF4011AE	4011B
HBF4011AF	4011B
HBF4012A	4012B
HBF4012AE	4012B
HBF4012AF	4012B
HBF4013	4013B
HBF4013A	4013B
HBF4013AE	4013B
HBF4013AF	4013B
HBF4014A	4014B
HBF4015A	4015B
HBF4016	4016B
HBF4016A	4016B
HBF4017	4017B
HBF4017A	4017B
HBF4017AE	4017B
HBF4017AF	4017B
HBF4018AE	4018B
HBF4018AF	4018B
HBF4019A	4019B
HBF4020A	4020B
HBF4020AE	4020B
HBF4020AF	4020B
HBF4021A	4021B
HBF4022AF	4022B
HBF4023A	4023B
HBF4023AE	4023B
HBF4023AF	4023B
HBF4024	4024B
HBF4024A	4024B
HBF4024AE	4024B
HBF4024AF	4024B
HBF4025	4025B
HBF4025A	4025B
HBF4025AE	4025B
HBF4025AF	4025B
HBF4027	4027B
HBF4027A	4027B
HBF4027AE	4027B
HBF4027AF	4027B
HBF4028A	4028B
HBF4028AE	4028B
HBF4028AF	4028B
HBF4029A	4029B
HBF4029AE	4029B
HBF4029AF	4029B
HBF4030A	4030B
HBF4030AE	4030B
HBF4030AF	4030B
HBF4032AE	4032B
HBF4032AF	4032B
HBF4038AE	4038B
HBF4038AF	4038B
HBF4040A	4040B
HBF4040AE	4040B
HBF4040AF	4040B
HBF4042A	4042B
HBF4042AE	4042B
HBF4042AF	4042B
HBF4043AE	4043B
HBF4043AF	4043B
HBF4044AE	4044B
HBF4044AF	4044B
HBF4048AE	4048B
HBF4048AF	4048B
HBF4050A	4050B
HBF4055AE	4055B
HBF4055AF	4055B
HBF4060AE	4060B
HBF4060AF	4060B
HBF4066AE	4066B
HC00930	229
HC00730	101
HC01820	123AP
HC01830	123AP
HC00838	123AP
HC2	525
HC30	156
HC39	156
HC50	156
HC67	116
HC68	116
HC69	116
HC71	116
HC72	125
HC73	125
HC80	116
HC206	108
HC371	123AP
HC372	123AP
HC373	123AP
HC380	107
HC381	107
HC394	107
HC454	107
HC458	123AP
HC460	107
HC461	107
HC495	152
HC500	116
HC515	124
HC535	107
HC535A	107
HC535B	107
HC537	107
HC539	123AP
HC545	107
HC561	123AP
HC645	108
HC668	108
HC670	116
HC680	116
HC700	116
HC710	116
HC720	125
HC730	125
HC772	108
HC784	107
HC829	108
HC14070B	4070B
HC100603	1019
HC1000109	703
HC1000109-0	703
HC1000111-0	703
HC1000114-0	726
HC1000217	941
HC1000217-0	941D
HC1000403	1005
HC1000417	799
HC1000503	1019
HC1000505	1085
HC1000703	1027
HC1001001	1043
HC10001090	703
HC10001200	1170
HC10002050	1100
HC10004010	801
HC10004110	7400
HC10006170	801
HC10008060	1254
HC10034050	1234
HC-01000	199
HC-00900	199
HC-00509	123AP
HC-00920	107
HC-00930	199
HC-00730	101
HC-01060	186
HC-00460	123AP
HC-00380	107
HC-01047	107
HC-01096	186
HC-01098	186
HC-00176	102A
HC-01209	128
HC-00268	194
HC-00372	229
HC-00373	199
HC-01390	123AP
HC-00394	229
HC-00458	123AP
HC-00461	123AP
HC-00496	184
HC-00535	123AP
HC-00536	199
HC-00537	123AP
HC-00644	128
HC-00668	108
HC-00693	123AP
HC-00711	199
HC-00732	199
HC-00735	123AP
HC-00772	108
HC-00784	107
HC-01820	123AP
HC-00828	123AP
HC-00829	107
HC-01830	108
HC-00838	123AP
HC-00839	108
HC-00871	123AP
HC-00921	123AP
HC-00923	199
HC-00924	123AP
HC-00929	199
HC-00945	123AP
HC-01226	186
HC-01317	128
HC-01318	128
HC-01335	199
HC-01359	107
HC-01417	123AP
HC-2	525
HC-30	116
HC-39	116
HC-56	123AP
HC-68	116
HC-373	123AP
HC-495	186
HC-535	123AP
HC-537	199
HC-561	123AP
HC-668	161
HC-772	123AP
HC-50102	5402
HCC4000B	4000
HCC4000BD	4000
HCC4000BF	4000
HCC4000BK	4000
HCC4001B	4001B
HCC4001BD	4001B
HCC4001BF	4001B
HCC4001BK	4001B
HCC4002B	4002B
HCC4002BD	4002B
HCC4002BF	4002B
HCC4002BK	4002B
HCC4006B	4006B
HCC4007UB	4007
HCC4008B	4008B
HCC4008BD	4008B
HCC4008BF	4008B
HCC4008BK	4008B
HCC4009	4009
HCC4011B	4011B
HCC4011BD	4011B
HCC4011BF	4011B
HCC4011BK	4011B
HCC4012B	4012B
HCC4012BD	4012B
HCC4012BF	4012B
HCC4012BK	4012B
HCC4013B	4013B
HCC4013BD	4013B
HCC4013BF	4013B
HCC4013BK	4013B
HCC4014B	4014B
HCC4015B	4015B
HCC4016B	4016B
HCC4017B	4017B
HCC4017BD	4017B
HCC4017BF	4017B
HCC4017BK	4017B
HCC4018B	4018B
HCC4018BD	4018B
HCC4018BF	4018B
HCC4018BK	4018B
HCC4019B	4019B
HCC4020B	4020B
HCC4020BD	4020B
HCC4020BF	4020B
HCC4020BK	4020B
HCC4021B	4021B
HCC4022B	4022B
HCC4022BD	4022B
HCC4022BE	4022B
HCC4022BF	4022B
HCC4022BK	4022B
HCC4023B	4023B
HCC4023BD	4023B
HCC4023BF	4023B
HCC4023BK	4023B
HCC4024B	4024B
HCC4024BD	4024B
HCC4024BF	4024B
HCC4024BK	4024B
HCC4025B	4025B
HCC4025BD	4025B
HCC4025BF	4025B
HCC4025BK	4025B
HCC4027B	4027B
HCC4027BD	4027B
HCC4027BF	4027B
HCC4027BK	4027B
HCC4028B	4028B
HCC4028BD	4028B
HCC4028BF	4028B
HCC4028BK	4028B
HCC4029B	4029B
HCC4029BD	4029B
HCC4029BF	4029B
HCC4029BK	4029B
HCC4032B	4032B
HCC4034B	4034B
HCC4035B	4035B
HCC4038B	4038B
HCC4040B	4040B
HCC4040BD	4040B
HCC4040BF	4040B
HCC4040BK	4040B
HCC4041UB	4041
HCC4042B	4042B
HCC4042BD	4042B
HCC4042BF	4042B
HCC4042BK	4042B
HCC4043B	4043B
HCC4043BD	4043B
HCC4043BF	4043B
HCC4043BK	4043B
HCC4044B	4044B
HCC4044BD	4044B
HCC4044BF	4044B
HCC4044BK	4044B
HCC4045B	4045B
HCC4046B	4046B
HCC4047B	4047B
HCC4048B	4048B
HCC4049UB	4049
HCC4050B	4050B
HCC4051B	4051B
HCC4052B	4052B
HCC4053B	4053B
HCC4055B	4055B
HCC4060B	4060B
HCC4060BD	4060B
HCC4060BF	4060B
HCC4060BK	4060B
HCC4063B	4063B
HCC4063BD	4063B
HCC4063BF	4063B
HCC4063BK	4063B
HCC4066B	4066B
HCC4068B	4068B
HCC4068BD	4068B
HCC4068BF	4068B
HCC4068BK	4068B
HCC4069UB	4069
HCC4070B	4070B
HCC4071B	4071B
HCC4071BD	4071B
HCC4071BF	4071B
HCC4071BK	4071B
HCC4072B	4072B
HCC4072BD	4072B
HCC4072BF	4072B
HCC4072BK	4072B
HCC4073B	4073B
HCC4073BD	4073B
HCC4073BF	4073B
HCC4073BK	4073B
HCC4075B	4075B
HCC4075BD	4075B
HCC4075BF	4075B
HCC4075BK	4075B
HCC4076B	4076B
HCC4077B	4077B
HCC4077BD	4077B
HCC4077BF	4077B
HCC4077BK	4077B
HCC4078B	4078B
HCC4078BD	4078B
HCC4078BF	4078B
HCC4078BK	4078B
HCC4081B	4081B
HCC4081BD	4081B
HCC4081BF	4081B
HCC4081BK	4081B
HCC4082B	4082B
HCC4082BD	4082B
HCC4082BF	4082B
HCC4082BK	4082B
HCC4085B	4085B
HCC4085BD	4085B
HCC4085BF	4085B
HCC4085BK	4085B
HCC4086B	4086B
HCC4086BD	4086B
HCC4086BF	4086B
HCC4086BK	4086B
HCC4093B	4093B
HCC4098B	4098B
HCC4098BD	4098B
HCC4098BF	4098B
HCC4098BK	4098B
HCC4099B	4099B
HCC4099BD	4099B
HCC4099BF	4099B
HCC4099BK	4099B
HCC4502B	4502B
HCC4510B	4510B
HCC4510BD	4510B
HCC4510BE	4510B
HCC4510BF	4510B
HCC4510BK	4510B
HCC4511B	4511B
HCC4511BD	4511B
HCC4511BF	4511B
HCC4511BK	4511B
HCC4512B	4512B
HCC4514B	4514B
HCC4514BD	4514B
HCC4515B	4515B
HCC4515BD	4515B
HCC4516B	4516B
HCC4516BD	4516B
HCC4516BF	4516B
HCC4516BK	4516B
HCC4518B	4518B
HCC4518BD	4518B
HCC4518BF	4518B
HCC4518BK	4518B
HCC4520B	4520B
HCC4520BD	4520B
HCC4520BF	4520B
HCC4520BK	4520B
HCC4527BD	4527B
HCC4527BF	4527B
HCC4527BK	4527B
HCC4555B	4555B
HCC4555BD	4555B
HCC4555BK	4555B
HCC4556B	4556B
HCC4556BD	4556B
HCC4556BF	4556B
HCC4556BK	4556B
HCC40160BD	40160B
HCC40160BF	40160B
HCC40160BK	40160B
HCC40161BD	40161B
HCC40161BF	40161B
HCC40161BK	40161B
HCC40162BF	40162B
HCC40162BK	40162B
HCC40163BD	40163B
HCC40163BF	40163B
HCC40163BK	40163B
HCC40174BD	40174B
HCC40174BF	40174B
HCC40174BK	40174B
HCF4000B	4000
HCF4000BE	4000
HCF4000BF	4000
HCF4001B	4001B
HCF4001BE	4001B
HCF4001BF	4001B
HCF4002B	4002B
HCF4002BE	4002B
HCF4002BF	4002B
HCF4006B	4006B
HCF4007UB	4007
HCF4008B	4008B
HCF4008BE	4008B
HCF4008BF	4008B
HCF4009	4009
HCF4011B	4011B
HCF4011BE	4011B
HCF4011BF	4011B
HCF4012B	4012B
HCF4012BE	4012B
HCF4012BF	4012B
HCF4013B	4013B
HCF4013BE	4013B
HCF4013BF	4013B
HCF4014B	4014B
HCF4015B	4015B
HCF4016B	4016B
HCF4017B	4017B
HCF4017BE	4017B
HCF4017BF	4017B
HCF4018B	4018B
HCF4018BE	4018B
HCF4018BF	4018B
HCF4019B	4019B
HCF4020B	4020B
HCF4020BE	4020B
HCF4020BEY	4020B
HCF4020BF	4020B
HCF4021B	4021B
HCF4022B	4022B
HCF4022BF	4022B
HCF4023B	4023B
HCF4023BE	4023B
HCF4023BF	4023B
HCF4024B	4024B
HCF4024BE	4024B
HCF4024BF	4024B
HCF4025B	4025B
HCF4025BE	4025B
HCF4025BF	4025B
HCF4026B	4026B
HCF4026BE	4026B
HCF4026BF	4026B
HCF4027B	4027B
HCF4027BE	4027B
HCF4027BF	4027B
HCF4028B	4028B
HCF4028BE	4028B
HCF4028BF	4028B
HCF4029B	4029B
HCF4029BE	4029B
HCF4029BF	4029B
HCF4030BE	4030B
HCF4030BF	4030B
HCF4031B	4031B
HCF4031BF	4031B
HCF4032B	4032B
HCF4032BE	4032B
HCF4032BF	4032B
HCF4033BEY	4033B
HCF4034B	4034B
HCF4035B	4035B
HCF4038B	4038B
HCF4038BE	4038B
HCF4038BF	4038B
HCF4040B	4040B
HCF4040BE	4040B
HCF4040BF	4040B
HCF4041UB	4041
HCF4042B	4042B
HCF4042BE	4042B
HCF4042BF	4042B
HCF4043B	4043B
HCF4043BE	4043B
HCF4043BF	4043B
HCF4044B	4044B
HCF4044BE	4044B
HCF4044BF	4044B
HCF4045B	4045B
HCF4045BE	4045B
HCF4045BEY	4045B
HCF4045BF	4045B
HCF4046B	4046B
HCF4047B	4047B
HCF4047BEY	4047B
HCF4048B	4048B
HCF4049UB	4049
HCF4050B	4050B
HCF4051B	4051B
HCF4052B	4052B
HCF4053B	4053B
HCF4053BE	4053B
HCF4055B	4055B
HCF4055BE	4055B
HCF4055BF	4055B
HCF4056B	4056B
HCF4056BE	4056B
HCF4056BF	4056B
HCF4060B	4060B
HCF4060BE	4060B
HCF4060BEY	4060B
HCF4060BF	4060B
HCF4063B	4063B
HCF4063BE	4063B
HCF4063BF	4063B
HCF4066B	4066B
HCF4066BE	4066B
HCF4067B	4067B
HCF4067BE	4067B
HCF4068B	4068B
HCF4068BE	4068B
HCF4068BF	4068B
HCF4069UB	4069
HCF4070B	4070B
HCF4071B	4071B
HCF4071BE	4071B
HCF4071BF	4071B
HCF4072B	4072B
HCF4072BE	4072B
HCF4072BF	4072B
HCF4073B	4073B
HCF4073BE	4073B
HCF4073BF	4073B
HCF4075B	4075B
HCF4075BE	4075B
HCF4075BF	4075B
HCF4076B	4076B
HCF4077B	4077B
HCF4077BE	4077B
HCF4077BF	4077B
HCF4078B	4078B
HCF4078BE	4078B
HCF4078BF	4078B
HCF4081B	4081B
HCF4081BE	4081B
HCF4081BF	4081B
HCF4082B	4082B
HCF4082BE	4082B
HCF4082BF	4082B
HCF4085B	4085B
HCF4085BE	4085B
HCF4085BF	4085B
HCF4086B	4086B
HCF4086BE	4086B
HCF4086BF	4086B
HCF4086BK	4086B
HCF4089BE	4089B
HCF4093B	4093B
HCF4094B	4094B
HCF4094BF	4094B
HCF4095B	4095B
HCF4095BE	4095B
HCF4095BF	4095B
HCF4096B	4096B
HCF4096BE	4096B
HCF4096BF	4096B
HCF4097B	4097B
HCF4097BE	4097B
HCF4098B	4098B
HCF4098BE	4098B
HCF4098BF	4098B
HCF4099B	4099B
HCF4099BE	4099B
HCF4099BF	4099B
HCF4502B	4502B
HCF4502BE	4502B
HCF4510B	4510B
HCF4510BF	4510B
HCF4511B	4511B
HCF4511BE	4511B
HCF4511BEY	4511B
HCF4511BF	4511B
HCF4512B	4512B
HCF4514B	4514B
HCF4514BD	4514B
HCF4514BE	4514B
HCF4514BEY	4514B
HCF4515B	4515B
HCF4515BD	4515B
HCF4515BE	4515B
HCF4516B	4516B
HCF4516BE	4516B
HCF4516BF	4516B
HCF4518B	4518B
HCF4518BE	4518B
HCF4518BF	4518B
HCF4520B	4520B
HCF4520BE	4520B
HCF4520BF	4520B
HCF4527BE	4527B
HCF4527BF	4527B
HCF4532BE	4532B
HCF4532BF	4532B
HCF4538BEY	4538B
HCF4555B	4555B
HCF4555BE	4555B
HCF4555BF	4555B
HCF4556B	4556B
HCF4556BE	4556B
HCF4556BF	4556B
HCF40160BE	40160B
HCF40160BF	40160B
HCF40161BE	40161B
HCF40161BF	40161B
HCF40162BE	40162B
HCF40162BF	40162B
HCF40163BE	40163B
HCF40163BF	40163B
HCF40174BE	40174B
HCF40174BF	40174B
HCL-29	123AP
HCL-6066	123AP
HCPL2530	3095
HCPL2531	3095
HCPL2630	3094
HCV	116
HD1-74C00	74C00
HD1-74C02	74C02
HD1-74C08	74C08
HD1-74C10	74C10
HD1-74C20	74C20
HD1-74C42	74C42
HD1-74C48	74C48
HD1-74C73	74C73
HD1-74C74	74C74
HD1-74C76	74C76
HD1-74C85	74C85
HD1-74C90	74C90
HD1-74C93	74C93
HD1-74C154	74C154
HD1-74C161	74C161
HD1-74C192	74C192
HD1-74C193	74C193
HD1-74C221	74C221
HD9-74C00	74C00
HD9-74C02	74C02
HD9-74C08	74C08
HD9-74C10	74C10
HD9-74C20	74C20
HD9-74C42	74C42
HD9-74C48	74C48
HD9-74C73	74C73
HD9-74C74	74C74
HD9-74C76	74C76
HD9-74C85	74C85
HD9-74C90	74C90
HD9-74C93	74C93
HD9-74C154	74C154
HD9-74C161	74C161
HD9-74C192	74C192
HD9-74C193	74C193
HD9-74C221	74C221
HD10-001-01	109
HD20-003-01	116
HD68A09EP	6809E
HD74LS00	74LS00
HD74LS00P	74LS00
HD74LS01	74LS01
HD74LS02P	74LS02
HD74LS04	74LS04
HD74LS04P	74LS04
HD74LS05	74LS05
HD74LS05P	74LS05
HD74LS08	74LS08
HD74LS08P	74LS08
HD74LS09	74LS09
HD74LS09P	74LS09
HD74LS10	74LS10
HD74LS10P	74LS10
HD74LS11	74LS11
HD74LS11P	74LS11
HD74LS14	74LS14
HD74LS14P	74LS14
HD74LS15	74LS15
HD74LS20	74LS20
HD74LS20P	74LS20
HD74LS21	74LS21
HD74LS22	74LS22
HD74LS22P	74LS22
HD74LS26	74LS26
HD74LS26P	74LS26
HD74LS27	74LS27
HD74LS27P	74LS27
HD74LS30	74LS30
HD74LS30P	74LS30
HD74LS32	74LS32
HD74LS32P	74LS32
HD74LS37	74LS37
HD74LS38P	74LS38
HD74LS40	74LS40
HD74LS42	74LS42
HD74LS42P	74LS42
HD74LS48	74LS48
HD74LS49	74LS49
HD74LS51	74LS51
HD74LS51P	74LS51
HD74LS54	74LS54
HD74LS55	74LS55
HD74LS73	74LS73
HD74LS74A	74LS74A
HD74LS74AP	74LS74A
HD74LS75P	74LS75
HD74LS78	74LS78
HD74LS78P	74LS78
HD74LS83A	74LS83A
HD74LS85	74LS85
HD74LS86	74LS86
HD74LS86P	74LS86
HD74LS91	74LS91
HD74LS91P	74LS91
HD74LS92	74LS92
HD74LS92P	74LS92
HD74LS93P	74LS93
HD74LS95B	74LS95B
HD74LS96	74LS196
HD74LS107	74LS107
HD74LS109	74LS109A
HD74LS109AP	74LS109A
HD74LS112	74LS112A
HD74LS113	74LS113
HD74LS113P	74LS113
HD74LS114	74LS114
HD74LS114P	74LS114
HD74LS123	74LS123
HD74LS123P	74LS123
HD74LS125AP	74LS125A
HD74LS126	74LS126A
HD74LS126P	74LS126A
HD74LS132	74LS132
HD74LS136	74LS136
HD74LS136P	74LS136
HD74LS138	74LS138
HD74LS138P	74LS138
HD74LS139	74LS139
HD74LS139P	74LS139
HD74LS148	74LS148
HD74LS151	74LS151
HD74LS151P	74LS151
HD74LS153	74LS153
HD74LS153P	74LS153
HD74LS155	74LS155
HD74LS155P	74LS155
HD74LS156	74LS156
HD74LS156P	74LS156
HD74LS157	74LS157
HD74LS157P	74LS157
HD74LS158	74LS158
HD74LS158P	74LS158
HD74LS161	74LS161A
HD74LS162	74LS162A
HD74LS163A	74LS163A
HD74LS163P	74LS163A
HD74LS164	74LS164
HD74LS164P	74LS164
HD74LS173	74LS173A
HD74LS173P	74LS173A
HD74LS174P	74LS174

PART NUMBER	NTE REPLACEMENT
HD74LS175	74LS175
HD74LS175P	74LS175
HD74LS181	74LS181
HD74LS190	74LS190
HD74LS191	74LS191
HD74LS192	74LS192
HD74LS193	74LS193
HD74LS194A	74LS194A
HD74LS195A	74LS195A
HD74LS196	74LS196
HD74LS196P	74LS196
HD74LS197	74LS197
HD74LS197P	74LS197
HD74LS221	74LS221
HD74LS221P	74LS221
HD74LS240	74LS240
HD74LS240P	74LS240
HD74LS241P	74LS241
HD74LS244	74LS244
HD74LS244P	74LS244
HD74LS245	74LS245
HD74LS247	74LS247
HD74LS248	74LS248
HD74LS249	74LS249
HD74LS251	74LS251
HD74LS251P	74LS251
HD74LS253	74LS253
HD74LS257	74LS257
HD74LS257P	74LS257
HD74LS258	74LS258
HD74LS273P	74LS273
HD74LS279	74LS279
HD74LS280	74LS280
HD74LS283	74LS283
HD74LS283P	74LS283
HD74LS290	74LS290
HD74LS290P	74LS290
HD74LS293	74LS293
HD74LS293P	74LS293
HD74LS298	74LS298
HD74LS365	74LS365A
HD74LS365AP	74LS365A
HD74LS365P	74LS365A
HD74LS367	74LS367
HD74LS367AP	74LS367
HD74LS368	74LS368
HD74LS373P	74LS373
HD74LS374	74LS374
HD74LS374P	74LS374
HD74LS386	74LS386
HD74LS393P	74LS393
HD74S00	74S00
HD74S00P	74S00
HD74S02	74S02
HD74S03	74S03
HD74S03P	74S03
HD74S04	74S04
HD74S04P	74S04
HD74S05	74S05
HD74S05P	74S05
HD74S10	74S10
HD74S10P	74S10
HD74S11	74S11
HD74S11P	74S11
HD74S15	74S15
HD74S15P	74S15
HD74S20	74S20
HD74S20P	74S20
HD74S22	74S22
HD74S22P	74S22
HD74S40	74S40
HD74S40P	74S40
HD74S64	74S64
HD74S64P	74S64
HD74S65	74S65
HD74S65P	74S65
HD74S74	74S74
HD74S74P	74S74
HD74S86	74S86
HD74S86P	74S86
HD74S112	74S112
HD74S112P	74S112
HD74S113	74S113
HD74S113P	74S113
HD74S114	74S114
HD74S114P	74S114
HD74S133	74S133
HD74S133P	74S133
HD74S134	74S134
HD74S134P	74S134
HD74S140	74S140
HD74S140P	74S140
HD74S151	74S151
HD74S151P	74S151
HD74S157	74S157
HD74S158	74S158
HD74S174	74S174
HD74S174P	74S174
HD74S175P	74S175
HD74S181	74S181
HD74S181P	74S181
HD74S251	74S251
HD74S251P	74S251
HD74S258	74S258
HD74SL02	74LS02
HD1468	109
HD2000	116
HD2000-301	116
HD2149	109
HD2155	109
HD2201	9932
HD2201P	9932
HD2202	9933
HD2202P	9933
HD2203	9946
HD2203P	9946
HD2204	9930
HD2204P	9930
HD2205	9945
HD2205P	9945
HD2206	9936
HD2206P	9936
HD2207	9962
HD2207P	9962
HD2208	9935
HD2208P	9935
HD2209	9944
HD2209P	9944
HD2210	9099
HD2210P	9099
HD2211	9093
HD2211P	9093
HD2213	9157
HD2213&	9157
HD2214	9158
HD2214P	9158
HD2215	9962
HD2215P	9962
HD2216	9937
HD2216P	9937
HD2501	7440
HD2501P	7440
HD2502	7460
HD2502P	7460
HD2503	7400
HD2503P	7400
HD2504	7420
HD2504P	7420
HD2505	7451
HD2505P	7451
HD2506	7450
HD2506P	7450
HD2507	7410
HD2507P	7410
HD2508	7430
HD2508P	7430
HD2509	7401
HD2509P	7401
HD2510	7474
HD2510P	7474
HD2511	7402
HD2511P	7402
HD2512	7453
HD2512P	7453
HD2513	7482
HD2513P	7482
HD2514	7454
HD2514P	7454
HD2515	7473
HD2515P	7473
HD2516	7476
HD2516P	7476
HD2517	7475
HD2517P	7475
HD2518	7441
HD2518P	7441
HD2519	7490
HD2519P	7490
HD2520	7493A
HD2520P	7493A
HD2521	7492
HD2521P	7492
HD2522	7404
HD2522P	7404
HD2523	7405
HD2523P	7405
HD2524	7491
HD2524P	7491
HD2526	7486
HD2526P	7486
HD2528	7403
HD2528P	7403
HD2529	7472
HD2529P	7472
HD2530	74107
HD2530P	74107
HD2531	7445
HD2531P	7445
HD2532	7447
HD2532P	7447
HD2533	7494
HD2533P	7494
HD2534	7495
HD2534P	7495
HD2535	7483
HD2535P	7483
HD2536	7442
HD2536P	7442
HD2537	7443
HD2537P	7443
HD2538P	7444
HD2539	7470
HD2539P	7470
HD2540	74170
HD2540P	74170
HD2541	74192
HD2541P	74192
HD2542	74193
HD2542P	74193
HD2543	74121
HD2543P	74121
HD2544	7438
HD2544P	7438
HD2545	7413
HD2545P	7413
HD2546	7496
HD2546P	7496
HD2547	74181
HD2547P	74181
HD2548	74150
HD2548P	74150
HD2549	74151
HD2549P	74151
HD2550	7408
HD2550P	7408
HD2551	7409
HD2551P	7409
HD2552	7437
HD2552P	7437
HD2555	74145
HD2555P	74145
HD2558	74141
HD2558P	74141
HD2560	7426
HD2560P	7426
HD2561	74123
HD2561P	74123
HD2562	74182
HD2562P	74182
HD2563	74H183
HD2563P	74H183
HD2564	74153
HD2564P	74153
HD2572	74196
HD2572P	74196
HD2573	74197
HD2573P	74197
HD2580	74154
HD2580P	74154
HD4000	4000
HD4001	4001B
HD4002	4002B
HD4011	4011B
HD4013	4013B
HD4015	4015B
HD4016	4016B
HD4017	4017B
HD4019	4019B
HD4024	4024B
HD4027	4027B
HD4030	4030B
HD4040	4040B
HD4050	4050B
HD4081	4081B
HD6001	177
HD6125	177
HD6147	116
HD6809	6809
HD6809E	6809E
HD6809EP	6809E
HD6809P	6809
HD6821P	6821
HD6865	116
HD7400	7400
HD7400P	7400
HD7402	7402
HD7402P	7402
HD7403	7403
HD7403P	7403
HD7404	7404
HD7404P	7404
HD7405	7405
HD7405P	7405
HD7406	7406
HD7406P	7406
HD7407	7407
HD7407P	7407
HD7410	7410
HD7410P	7410
HD7412	7412
HD7412P	7412
HD7414	7414
HD7414P	7414
HD7416	7416
HD7416P	7416
HD7417	7417
HD7417P	7417
HD7420	7420
HD7420P	7420
HD7426	7426
HD7426P	7426
HD7427	7427
HD7427P	7427
HD7430	7430
HD7430P	7430
HD7432	7432
HD7432P	7432
HD7438P	7438
HD7440	7440
HD7440P	7440
HD7442A	7442
HD7442AP	7442
HD7443A	7443
HD7443AP	7443
HD7444A	7444
HD7444AP	7444
HD7450	7450
HD7450P	7450
HD7451	7451
HD7451P	7451
HD7453	7453
HD7453P	7453
HD7454	7454
HD7454P	7454
HD7460	7460
HD7460P	7460
HD7471P	7417
HD7472	7472
HD7472P	7472
HD7473AP	7473
HD7473P	7473
HD7474	7474
HD7474P	7474
HD7475	7475
HD7475P	7475
HD7485	7485
HD7485P	7485
HD7486	7486
HD7486P	7486
HD7489	7489
HD7490A	7490
HD7490AP	7490
HD7492A	7492
HD7492AP	7492
HD7493A	7493A
HD7493AD	7493A
HD7493AP	7493A
HD7493P	7493A
HD7496	7496
HD7496P	7496
HD14011BP	4011B
HD14013B	4013B
HD14025B	4025B
HD14027B	4027B
HD14028B	4028B
HD14042BP	4042B
HD14050BP	4050B
HD14051BP	4051B
HD14052B	4052B
HD14052BP	4052B
HD14053BP	4053B
HD14066BCP	4066B
HD14066BP	4066B
HD14069UBP	4069
HD14081BP	4081B
HD14093BP	4093B
HD14194B	40194B
HD14503BP	4503B
HD14514	4515B
HD14516	4516B
HD14516P	4516B
HD14517B	4517B
HD14518	4518B
HD14518P	4518B
HD14520	4520B
HD14520P	4520B
HD14522	4522B
HD14522P	4522B
HD14526B	4526B
HD14527	4527B
HD14527P	4527B
HD14528	4528B
HD14532B	4532B
HD14539	4539B
HD14539P	4539B
HD14541B	4541B
HD14553	4553B
HD14555	4555B
HD14555P	4555B
HD14558B	4558B
HD14584BP	4016B
HD38980	2061
HD38980A	2061
HD38980C	2061
HD38991	2060
HD38991A	2060
HD38993A	2060
HD46802	6802
HD74107	74107
HD74107P	74107
HD74121	74121
HD74121P	74121
HD74123	74123
HD74125	74125
HD74125P	74125
HD74126	74126
HD74126P	74126
HD74132	74132
HD74132P	74132
HD74141	74141
HD74145	74145
HD74148	74148
HD74150	74150
HD74150P	74150
HD74151A	74151
HD74151AP	74151
HD74153	74153
HD74155	74155
HD74155P	74155
HD74156	74156
HD74156P	74156
HD74157	74157
HD74160	74160
HD74160P	74160
HD74161	74161
HD74161P	74161
HD74162	74162
HD74162P	74162
HD74163	74163
HD74163P	74163
HD74164	74164
HD74164P	74164
HD74166	74166
HD74166P	74166
HD74173	74173
HD74174	74174
HD74174P	74174
HD74175	74175
HD74175P	74175
HD74176	74176
HD74177	74177
HD74177P	74177
HD74180	74180
HD74180P	74180
HD74182	74182
HD74190	74190
HD74190P	74190
HD74191	74191
HD74191P	74191
HD74195	74195
HD74196	74196
HD74198	74198
HD74198P	74198
HD74199	74199
HD74199P	74199
HD74251	74251
HD74279	74279
HD75188	75188
HD75188P	75188
HD75189	75189
HD75450A	75450B
HD75451	75451B
HD75452	75452B
HD75452P	75452B
HD200207	116
HD200301	116
HD252538	7444
HD1000101	109
HD1000101-0	109
HD1000105	110MP
HD1000105-0	110MP
HD1000301	109
HD1000302	109
HD1000303	109
HD1000303-0	109
HD1000309	138A
HD2000106	177
HD2000108	156
HD2000110	116
HD2000110-0	116
HD2000206	177
HD2000301	116
HD2000301-0	116
HD2000305	116
HD2000307	116
HD2000308	116
HD2000413	116
HD2000501	116
HD2000510	116
HD2000610	116
HD2000703	116
HD2000710	113A
HD2000803	116
HD2000903	116
HD2001105	177
HD2001310	116
HD3000101-0	142A
HD3000109-0	5074A
HD3000113	5074A
HD3000201-0	5084A
HD3000309	138A
HD3000309-0	138A
HD3000401	139A
HD3000409	5072A
HD3001009	5074A
HD3001109	145A
HD3001109-0	144A
HD3001809	5074A
HD3002109	144A
HD3002409	142A
HD3003109	5072A
HD3003309	135A
HD4000109	109
HD4000909	614
HD10000101	109
HD10000302	109
HD10001010	109
HD10001050	109
HD20000703	116
HD20000903	116
HD20001100	116
HD20001210	519
HD20003010	116
HD20005100	156
HD20007030	116
HD20011050	177
HD30000109-0	5074A
HD30001090	5074A
HD30001200	140A
HD30010090	5074A
HD30011090	144A
HD30017090	139A
HD30019090	138A
HD40001060	614
HD-00072	103A
HD-00227	123AP
HD-00261	192
HD-00471	186
HD-1	116
HD-187	101
HD-20008	506
HD-1000101	109
HD-2000106	177
HD-2000108	506
HD-2000308	116
HD-3000301	116
HD-3000409	138A
HDS93530	3062
HDS93531	3053
HDSP4031	3055
HDSP-3401	3080
HDSP-3530	3062
HDSP-3531	3053
HDSP-3901	3080
HDSP-4031	3055
HDSP-5301	3078
HDSP-5303	3079
HE-00930	199
HE-00829	107
HE-0A90	109
HE-1N34	109
HE-1N34A	109
HE-1N60	109
HE-1N60P	109
HE-1S188	109
HE-1S426	109
HE-1S446	109
HE-1S555	614
HE-7	138A
HE-7A	5014A
HE-12A	5021T1
HE-56-56	519
HE-56-655	116
HE-234-266	552
HE-234-266(ZENITH)	142A
HE-234-267	552
HE-234-271	297
HE-234-272	298
HE-234-273	171
HE-234-274	159
HE-234-275	123AP
HE-234-290	123AP
HE-234-299	519
HE-234-353	552
HE-234-521	506
HE-234-522	123AP
HE-234-523	123AP
HE-234-526	552
HE-417-875	123AP
HE-433-877	74LS138
HE-433-1037	74LS257
HE-442-627	977
HE-442-665	1917
HE-442-674	966
HE-442-675	967
HE-442-970	4164
HE-443-72	7417
HE-443-607	4013B
HE-443-728	74LS00
HE-443-730	74LS74A
HE-443-732	74LS30
HE-443-752	74LS175
HE-443-754	74LS240
HE-443-755	74LS04
HE-443-757	74LS161A
HE-443-769	74LS164
HE-443-779	74LS02
HE-443-780	74LS08
HE-443-791	74LS244
HE-443-794	75188
HE-443-795	75189
HE-443-799	74LS157
HE-443-800	74LS27
HE-443-802	74LS257
HE-443-805	74LS273
HE-443-811	74LS125A
HE-443-816	74LS09
HE-443-837	74LS373
HE-443-839	74LS243
HE-443-857	74LS367
HE-443-863	74LS374
HE-443-864	74LS11
HE-443-872	74LS14
HE-443-875	74LS32
HE-443-877	74LS138
HE-443-879	74LS174
HE-443-885	74LS245
HE-443-891	74LS86
HE-443-892	74LS166
HE-443-915	74LS86
HE-443-967	7406
HE-443-970	4164
HE-443-973	74LS393
HE-443-983	74S175
HE-443-991	4050B
HE-443-999	74LS624
HE-443-1001	74LS280
HE-443-1020	7407
HE-443-1021	8255
HE-443-1024	74LS368
HE-443-1034	74LS38
HE-443-1036	74LS156
HE-443-1037	74LS257
HE-443-1040	96LS02
HE-443-1053	74S174
HE-443-1058	74LS541
HE-443-1112	9602
HE-443-1173	74LS670
HE-1024	109
HE-10001	109
HE-10002	109
HE-10003	109
HE-10024	109
HE-10025	109
HE-10027	109
HE-10030	177
HE-10040	109
HE-10044	110MP
HE-20011	116
HE-20049	138A
HE-CD0000	109
HE-M8489	177
HE-0A90	109
HE-SD1	116
HE_20063	519
HEF4000B	4000
HEF4000BD	4000
HEF4000P	4000
HEF4001BD	4001B
HEF4001BP	4001B
HEF4001P	4001B
HEF4002B	4002B
HEF4002BD	4002B
HEF4002BP	4002B
HEF4002P	4002B
HEF4008B	4008B
HEF4008BD	4008B
HEF4008BP	4008B
HEF4008P	4008B
HEF4011B	4011B
HEF4011BD	4011B
HEF4011BP	4011B
HEF4011P	4011B
HEF4012B	4012B
HEF4012BD	4012B
HEF4012BP	4012B
HEF4012P	4012B
HEF4013BD	4013B
HEF4013BP	4013B
HEF4013P	4013B
HEF4015B	4015B
HEF4017B	4017B
HEF4017BD	4017B
HEF4017BP	4017B
HEF4017P	4017B
HEF4018BD	4018B
HEF4018BP	4018B
HEF4018P	4018B
HEF4019B	4019B
HEF4019BD	4019B
HEF4019BP	4019B
HEF4020B	4020B
HEF4020BD	4020B
HEF4020BP	4020B
HEF4020P	4020B
HEF4022BD	4022B
HEF4022BP	4022B
HEF4022P	4022B
HEF4023B	4023B
HEF4023BD	4023B
HEF4023BP	4023B
HEF4023P	4023B
HEF4024B	4024B
HEF4024BD	4024B
HEF4024BP	4024B
HEF4024P	4024B
HEF4025B	4025B
HEF4025BD	4025B
HEF4025BP	4025B
HEF4025P	4025B
HEF4027BD	4027B
HEF4027BP	4027B
HEF4027P	4027B
HEF4028B	4028B
HEF4028BD	4028B
HEF4028BP	4028B
HEF4028P	4028B
HEF4029B	4029B
HEF4029BD	4029B
HEF4029BP	4029B
HEF4029P	4029B
HEF4030B	4030B
HEF4030BD	4030B
HEF4030BP	4030B
HEF4030P	4030B
HEF4040B	4044B
HEF4040BD	4040B
HEF4040BP	4040B
HEF4040P	4040B
HEF4042B	4042B
HEF4042BD	4042B
HEF4042BP	4042B
HEF4042P	4042B
HEF4043BD	4043B
HEF4043BP	4043B
HEF4043P	4043B
HEF4044B	4044B
HEF4044BD	4044B
HEF4044BP	4044B
HEF4044P	4044B
HEF4046B	4046B
HEF4046BD	4046B
HEF4047B	4047B
HEF4050B	4050B
HEF4051B	4051B
HEF4051BP	4051B
HEF4052B	4052B
HEF4052BP	4052B
HEF4053B	4053B
HEF4053BP	4053B
HEF4060B	4060B
HEF4063B	4063B
HEF4066B	4066B
HEF4066BP	4066B
HEF4068B	4068B
HEF4068BD	4068B
HEF4068BP	4068B
HEF4068P	4068B
HEF4070B	4070B
HEF4071B	4071B
HEF4071BD	4071B
HEF4071BP	4071B
HEF4071P	4071B
HEF4072B	4072B
HEF4072BD	4072B
HEF4072BP	4072B
HEF4072P	4072B
HEF4073B	4073B
HEF4073BD	4073B
HEF4073P	4073B
HEF4075B	4075B
HEF4075BD	4075B
HEF4075BP	4075B
HEF4077B	4077B
HEF4077BD	4077B
HEF4077BP	4077B
HEF4077P	4077B
HEF4078B	4078B

PART NUMBER	NTE REPLACEMENT
HEF4078BD	4078B
HEF4078BP	4078B
HEF4078P	4078B
HEF4081BD	4081B
HEF4081BP	4081B
HEF4081P	4081B
HEF4082B	4082B
HEF4082BD	4082B
HEF4082BP	4082B
HEF4082P	4082B
HEF4085BD	4085B
HEF4085BP	4085B
HEF4085P	4085B
HEF4086B	4086B
HEF4086BD	4086B
HEF4086BP	4086B
HEF4093B	4093B
HEF4094B	4094B
HEF4094BP	4094B
HEF4508BD	4508B
HEF4508BP	4508B
HEF4510B	4510B
HEF4510BD	4510B
HEF4510BP	4510B
HEF4511B	4511B
HEF4516B	4516B
HEF4516BD	4516B
HEF4516BP	4516B
HEF4518BD	4518B
HEF4518BP	4518B
HEF4518P	4518B
HEF4520B	4520B
HEF4520BD	4520B
HEF4520BP	4520B
HEF4520P	4520B
HEF4521B	4521B
HEF4522BD	4522B
HEF4522BP	4522B
HEF4527B	4527B
HEF4528B	4528B
HEF4528BD	4528B
HEF4528BP	4528B
HEF4531B	4531B
HEF4531BD	4531B
HEF4531BP	4531B
HEF4538	4538B
HEF4538B	4538B
HEF4539B	4539B
HEF4539BD	4539B
HEF4539BP	4539B
HEF4541B	4541B
HEF4556BP	4556B
HEF4585BD	4585B
HEF40097B	40097B
HEF40097BD	40097B
HEF40097BP	40097B
HEF40098B	40098B
HEF40098BD	40098B
HEF40098BP	40098B
HEF40098P	40098B
HEF40106B	40106B
HEF40160B	40160B
HEF40160BD	40160B
HEF40160BP	40160B
HEF40161B	40161B
HEF40161BD	40161B
HEF40161BP	40161B
HEF40162B	40162B
HEF40162BD	40162B
HEF40162BP	40162B
HEF40163B	40163B
HEF40163BD	40163B
HEF40163BP	40163B
HEF40174B	40174B
HEF40174BD	40174B
HEF40174BP	40174B
HEF40174P	40174B
HEF40175B	40175B
HEF40175BD	40175B
HEF40175BP	40175B
HEF40192BD	40192B
HEF40192BP	40192B
HEF40192P	40192B
HEF40193B	40193B
HEF40193BD	40193B
HEF40193BP	40193B
HEF40193P	40193B
HEF40194B	40194B
HEF40194BD	40194B
HEF40194P	40194B
HEF40195B	40195B
HEF40195BD	40195B
HEF40195BP	40195B
HEP0903P	9669
HEP0904P	9670
HEP1	126
HEP2	100
HEP3	160
HEP50	123A
HEP51	129
HEP52	159
HEP53	123A
HEP54	123A
HEP55	123A
HEP56	108
HEP57	159
HEP75	192
HEP76	193
HEP101	140A
HEP102	134A
HEP103	137A
HEP104	139A
HEP105	142A
HEP134	109
HEP135	109
HEP151	5940
HEP153	5944
HEP154	116
HEP156	116
HEP157	116
HEP158	116
HEP159	125
HEP160	125
HEP161	5800
HEP162	5802
HEP165	113A
HEP166	115
HEP170	125
HEP175	166
HEP176	167
HEP177	168
HEP178	169
HEP200	104
HEP230	104
HEP230X2	124
HEP231	105
HEP232	121
HEP233	105
HEP234	127
HEP235	127
HEP236	179
HEP237	213
HEP240	124
HEP241	175
HEP242	129
HEP243	128
HEP244	157
HEP245	184
HEP246	185
HEP247	130
HEP248	219
HEP250	102A
HEP251	102A
HEP252	102
HEP253	158
HEP254	158
HEP280	102A
HEP281	102A
HEP300	5470
HEP302	5472
HEP304	5501
HEP306	5504
HEP310	6400A
HEP311	6407
HEP320	5400
HEP573	9989
HEP591	704
HEP602	135A
HEP603	136A
HEP604	141A
HEP605	143A
HEP606	144A
HEP607	145A
HEP608	146A
HEP609	147A
HEP610	148A
HEP610-RT	5090A
HEP611	149A
HEP612	150A
HEP613	151A
HEP620	5515
HEP621	5515
HEP622	5446
HEP623	121
HEP624	121
HEP625	127
HEP626	104
HEP627	179
HEP628	121
HEP629	102
HEP630	102
HEP631	102
HEP632	102
HEP633	102
HEP634	102A
HEP635	126
HEP636	126
HEP637	160
HEP638	126
HEP639	126
HEP640	126
HEP641	101
HEP642	131
HEP643	131
HEP700	185
HEP701	184
HEP702	218
HEP703	175
HEP703X2	175
HEP704	130
HEP704X2	130MP
HEP705	130
HEP706	154
HEP707	162
HEP708	159
HEP709	161
HEP710	129
HEP711	128
HEP712	154
HEP713	154
HEP714	190
HEP715	159
HEP716	159
HEP717	159
HEP718	108
HEP719	161
HEP720	108
HEP721	107
HEP722	108
HEP723	108
HEP724	123A
HEP725	123A
HEP726	199
HEP727	108
HEP728	123A
HEP729	123A
HEP730	199
HEP731	107
HEP732	107
HEP733	108
HEP734	107
HEP735	123A
HEP736	128
HEP737	199
HEP738	123A
HEP739	159
HEP740	163A
HEP801	312
HEP802	312
HEP4072P	4072B
HEP6061P	750
HEP6062P	708
HEP-0700	112
HEP-2	160
HEP-75	311
HEP-237	213
HEP-248	219
HEP-625	179
HEP-626	179
HEP-705	219
HEP-6005	121
HEP-6061P	750
HEP-7450P	7450
HEP-7451P	7451
HEP-7453P	7453
HEP-A0500	405
HEP-A0450	413
HEP-A0502	401
HEP-A0455	414
HEP-A502	401
HEP-C1030P	9930
HEP-C1032P	9932
HEP-C1033P	9933
HEP-C1035P	9935
HEP-C1036P	9936
HEP-C1044P	9944
HEP-C1045P	9945
HEP-C1046P	9946
HEP-C1052P	9099
HEP-C1053P	9093
HEP-C1057P	9157
HEP-C1058P	9158
HEP-C1062P	9962
HEP-C2005P	9989
HEP-C3000L	7400
HEP-C3000P	7400
HEP-C3001L	7401
HEP-C3001P	7401
HEP-C3002P	7402
HEP-C3004L	7404
HEP-C3004P	7404
HEP-C3010L	7410
HEP-C3010P	7410
HEP-C3020L	7420
HEP-C3020P	7420
HEP-C3030L	7430
HEP-C3030P	7430
HEP-C3040L	7440
HEP-C3040P	7440
HEP-C3041L	7441
HEP-C3041P	7441
HEP-C3050L	7450
HEP-C3050P	7450
HEP-C3073L	7473
HEP-C3073P	7473
HEP-C3075L	7475
HEP-C3075P	7475
HEP-C3800L	7490
HEP-C3800P	7490
HEP-C3801L	7492
HEP-C3801P	7492
HEP-C4000P	4001B
HEP-C4001P	4011B
HEP-C4002P	4023B
HEP-C4003P	4025B
HEP-C4020P	4013B
HEP-C4021P	4027B
HEP-C4030P	4017B
HEP-C4040P	4042B
HEP-C4050P	4016B
HEP-C6001	760
HEP-C6007	754
HEP-C6019	754
HEP-C6050G	973
HEP-C6052G	941
HEP-C6052P	941M
HEP-C6055L	725
HEP-C6056P	722
HEP-C6059P	746
HEP-C6061P	750
HEP-C6062P	708
HEP-C6063P	712
HEP-C6069G	780
HEP-C6069P	780
HEP-C6070P	714
HEP-C6072P	739
HEP-C6075P	738
HEP-C6076P	749
HEP-C6079	747
HEP-C6079P	747
HEP-C6080P	721
HEP-C6082P	708
HEP-C6083P	712
HEP-C6085P	731
HEP-C6090	804
HEP-C6096P	801
HEP-C6100P	783
HEP-C6101P	723
HEP-C6102P	778A
HEP-C6103P	909
HEP-C6105P	972
HEP-C6107P	975
HEP-C6110P	960
HEP-C6111P	962
HEP-C6113P	966
HEP-C6114P	968
HEP-C6116P	972
HEP-C6118P	961
HEP-C6120P	963
HEP-C6122P	967
HEP-C6123P	969
HEP-C6130P	955M
HEP-C6131P	978
HEP-C6132	977
HEP-C7400P	7400
HEP-C7401P	7401
HEP-C7402P	7402
HEP-C7403P	7403
HEP-C7404P	7404
HEP-C7405P	7405
HEP-C7406P	7406
HEP-C7407P	7407
HEP-C7408P	7408
HEP-C7409P	7409
HEP-C7410P	7410
HEP-C7411P	7411
HEP-C7413P	7413
HEP-C7414P	7414
HEP-C7416P	7416
HEP-C7417P	7417
HEP-C7420P	7420
HEP-C7423P	7423
HEP-C7425P	7425
HEP-C7426P	7426
HEP-C7427P	7427
HEP-C7430P	7430
HEP-C7432P	7432
HEP-C7437P	7437
HEP-C7438P	7438
HEP-C7440P	7440
HEP-C7445P	7445
HEP-C7446AP	7446
HEP-C7447AP	7447
HEP-C7448P	7448
HEP-C7454P	7454
HEP-C7460P	7460
HEP-C7470P	7470
HEP-C7472P	7472
HEP-C7473P	7473
HEP-C7474P	7474
HEP-C7475P	7475
HEP-C7483P	7483
HEP-C7485P	7485
HEP-C7486P	7486
HEP-C7490AP	7490
HEP-C7491AP	7491
HEP-C7492AP	7492
HEP-C7493AP	7493A
HEP-C7495P	7495
HEP-C7496P	7496
HEP-C74107P	74107
HEP-C74121P	74121
HEP-C74123P	74123
HEP-C74125P	74125
HEP-C74141P	74141
HEP-C74145P	74145
HEP-C74150P	74150
HEP-C74151AP	74151
HEP-C74153P	74153
HEP-C74154P	74154
HEP-C74155P	74155
HEP-C74156P	74156
HEP-C74160AP	74160
HEP-C74161AP	74161
HEP-C74162AP	74162
HEP-C74163AP	74163
HEP-C74164P	74164
HEP-C74165P	74165
HEP-C74166P	74166
HEP-C74170P	74170
HEP-C74174P	74174
HEP-C74175P	74175
HEP-C74176P	74176
HEP-C74177P	74177
HEP-C74180P	74180
HEP-C74181P	74181
HEP-C74182P	74182
HEP-C74190P	74190
HEP-C74191P	74191
HEP-C74192P	74192
HEP-C74193P	74193
HEP-C74195P	74195
HEP-C74196P	74196
HEP-C74197P	74197
HEP-C74198P	74198
HEP-C74199P	74199
HEP-D0100	3050
HEP-D0002	3056
HEP-D0012	3059
HEP-D0022	3060
HEP-D0101	3051
HEP-F0010	312
HEP-F0015	312
HEP-F0021	312
HEP-F1035	326
HEP-F2004	221
HEP-F2007	222
HEP-G0001	126
HEP-G0002	160
HEP-G0003	160
HEP-G0004	102A
HEP-G0005	100
HEP-G0006	100
HEP-G0007	100
HEP-G0008	126
HEP-G0009	126
HEP-G0010	126
HEP-G003	160
HEP-G004	102A
HEP-G008	127
HEP-G0011	101
HEP-G6000	104
HEP-G6001	179
HEP-G6003	104
HEP-G6004	105
HEP-G6005	121
HEP-G6006	213
HEP-G6007	127
HEP-G6008	127
HEP-G6009	179
HEP-G6010	213
HEP-G6011	176
HEP-G6013	121
HEP-G6014	179
HEP-G6015	179
HEP-G6016	131
HEP-G6018	179
HEP-P0160	5940
HEP-P2003	3000
HEP-P2004	3004
HEP-P2005	3020
HEP-P5000	3040
HEP-P5002	3047
HEP-R0138	5890
HEP-R0600	156
HEP-R0700	112
HEP-R0050	125
HEP-R0070	5801
HEP-R0090	5800
HEP-R0051	125
HEP-R0052	125
HEP-R0053	125
HEP-R0054	125
HEP-R0055	125
HEP-R0056	125
HEP-R0071	5802
HEP-R0072	5804
HEP-R0074	5808
HEP-R0076	5808
HEP-R0078	5809
HEP-R0091	5801
HEP-R0092	5802
HEP-R0094	5804
HEP-R0096	5806
HEP-R0097	5808
HEP-R0098	5809
HEP-R0130	5870
HEP-R0160	5940
HEP-R0250	5980
HEP-R0602	156
HEP-R0604	156
HEP-R0606	506
HEP-R0801	166
HEP-R0803	167
HEP-R0805	169
HEP-R0131	5874
HEP-R0132	5874
HEP-R0134	5878
HEP-R0136	5882
HEP-R0137	5886
HEP-R0138	5890
HEP-R0161	5942
HEP-R0162	5944
HEP-R0164	5948
HEP-R0166	5952
HEP-R0251	5986
HEP-R0253	5986
HEP-R0254	5990
HEP-R0255	5990
HEP-R0256	5994
HEP-R0257	5994
HEP-R0851	166
HEP-R0852	166
HEP-R0853	167
HEP-R0855	168
HEP-R0856	169
HEP-R0875	5322
HEP-R0876	5322
HEP-R0877	5322
HEP-R0879	5326
HEP-R804	168
HEP-R1001	5400
HEP-R1002	5401
HEP-R1003	5402
HEP-R1004	5403
HEP-R1005	5404
HEP-R1202	5515
HEP-R1205	5515
HEP-R1218	5414
HEP-R1220	5442
HEP-R1221	5444
HEP-R1222	5446
HEP-R1223	5448
HEP-R1241	5481
HEP-R1242	5482
HEP-R1243	5483
HEP-R1244	5484
HEP-R1245	5485
HEP-R1246	5486
HEP-R1247	5487
HEP-R1300	5500
HEP-R1301	5501
HEP-R1302	5502
HEP-R1304	5504
HEP-R1306	5506
HEP-R1307	5507
HEP-R1471	5541
HEP-R1472	5542
HEP-R1473	5543
HEP-R1475	5545
HEP-R1721	5622
HEP-R1722	5623
HEP-R1781	5681
HEP-R1782	5682
HEP-R1783	5683
HEP-R1785	5685
HEP-R2001	6403
HEP-R2002	6407
HEP-R2021	6404
HEP-R2500	610
HEP-R2501	611
HEP-R2503	614
HEP-R3201	522
HEP-R3203	500A
HEP-R9001	178MP
HEP-R9002	178MP
HEP-R9003	178MP
HEP-R9134	109
HEP-R9135	109
HEP-S0001	194
HEP-S0002	192
HEP-S0003	192
HEP-S0004	123A
HEP-S0005	194
HEP-S0006	234
HEP-S0008	229
HEP-S0010	229
HEP-S0020	229
HEP-S0030	123A
HEP-S004	195A
HEP-S0011	123A
HEP-S0012	129
HEP-S0013	159
HEP-S0014	123A
HEP-S0015	123A
HEP-S0016	108
HEP-S0017	161
HEP-S0019	159
HEP-S0021	108
HEP-S0022	123A
HEP-S0023	199
HEP-S0024	199
HEP-S0025	123A
HEP-S0026	159
HEP-S0031	159
HEP-S0032	159
HEP-S0033	229
HEP-S0034	123A
HEP-S920	232
HEP-S3001	195A
HEP-S3006	320
HEP-S3012	129
HEP-S3013	311
HEP-S3019	190
HEP-S3020	188
HEP-S3021	191
HEP-S3022	191
HEP-S3023	210
HEP-S3024	210
HEP-S3025	210
HEP-S3026	188
HEP-S3027	211
HEP-S3028	211
HEP-S3029	211
HEP-S3030	189
HEP-S3031	189
HEP-S3032	189
HEP-S3033	154
HEP-S3034	154
HEP-S3035	154
HEP-S3042	128
HEP-S3043	322
HEP-S3045	235
HEP-S3049	295
HEP-S3052	325
HEP-S5000	184
HEP-S5001	182
HEP-S5002	183
HEP-S5003	184
HEP-S5004	182
HEP-S5005	183
HEP-S5006	185
HEP-S5007	185
HEP-S5008	183
HEP-S5009	183
HEP-S5010	183
HEP-S5011	124
HEP-S5012	175
HEP-S5013	129
HEP-S5014	128
HEP-S5015	157
HEP-S5018	218
HEP-S5019	175
HEP-S5020	162
HEP-S5022	159
HEP-S5023	129
HEP-S5024	154
HEP-S5026	154
HEP-S7000	181
HEP-S7001	180
HEP-S7002	130
HEP-S7003	219
HEP-S7004	130
HEP-S9001	6402
HEP-S9002	6409
HEP-S9100	172A
HEP-S9101	253
HEP-S9102	257
HEP-S9103	272
HEP-S9120	232
HEP-S9121	254
HEP-S9123	273
HEP-S9140	243
HEP-S9141	244
HEP-S9142	251
HEP-S9143	252
HEP-S9144	244
HEP-S9145	243
HEP-S9146	245
HEP-S9147	246
HEP-S9148	247
HEP-S9149	248
HEP-S9150	263
HEP-S9152	264
HEP-Z0206	5005A
HEP-Z0206A	5005A
HEP-Z0208	5007A
HEP-Z0208A	5007A
HEP-Z0210	5009A
HEP-Z0210A	5009A
HEP-Z0220	5019A
HEP-Z0220A	5019A
HEP-Z0230	5029A
HEP-Z0401	5066A
HEP-Z0402	134A
HEP-Z0403	5067A
HEP-Z0405	5069A
HEP-Z0406	135A
HEP-Z0407	136A
HEP-Z0408	137A
HEP-Z0409	5071A
HEP-Z0410	138A
HEP-Z0420	5077A
HEP-Z0430	5088A
HEP-Z0440	5097A
HEP-Z0211	5010A
HEP-Z0211A	5010A
HEP-Z0212	5011A
HEP-Z0212A	5011A
HEP-Z0214	5013A
HEP-Z0214A	5013A
HEP-Z0215	5014A
HEP-Z0215A	5014A
HEP-Z0216	138A
HEP-Z0216A	5015A
HEP-Z0217	5016A
HEP-Z0217A	5016A
HEP-Z0219	5018A
HEP-Z0219A	5018A
HEP-Z0222	5021A
HEP-Z0225	5024A
HEP-Z0228	5027A
HEP-Z0231	5030A
HEP-Z0234	5033A
HEP-Z0254	5098A
HEP-Z0255	5099A
HEP-Z0411	5072A
HEP-Z0412	139A
HEP-Z0413	140A
HEP-Z0415	142A
HEP-Z0416	143A
HEP-Z0417	144A
HEP-Z0418	145A
HEP-Z0419	5075A
HEP-Z0421	5079A
HEP-Z0422	5080A
HEP-Z0423	5081A
HEP-Z0424	146A
HEP-Z0425	5083A
HEP-Z0426	147A
HEP-Z0427	5085A
HEP-Z0428	5086A
HEP-Z0432	5090A
HEP-Z0433	149A
HEP-Z0436	150A
HEP-Z0438	5096A
HEP-Z0439	151A
HEP-Z0442	5100A
HEP-Z0444	5103A
HEP-Z0445	5105A
HEP-Z212	5011A
HEP-Z2500	5111A
HEP-Z2502	5113A
HEP-Z2504	5115A
HEP-Z2506	5117A
HEP-Z2508	5119A
HEP-Z2510	5121A
HEP-Z2513	5124A
HEP-Z2514	5125A
HEP-Z2516	5127A
HEP-Z2519	5130A
HEP-Z2522	5133A
HEP-Z2525	5136A
HEP-Z2526	5137A
HEP-Z2528	5139A
HEP-Z2530	5141A
HEP-Z2531	5142A
HEP-Z2537	5148A
HEP-Z2542	5153A
HEP-Z2545	5156A
HEP-Z2547	5158A
HEP-Z2548	5159A
HEP-Z2551	5162A
HEP-Z3500	5174AK
HEP-Z3502	5176AK
HEP-Z3504	5178AK
HEP-Z3505	5180AK
HEP-Z3507	5182AK

PART NUMBER	NTE REPLACEMENT
HEP-Z3511	5185A
HEP-Z3512	5186A
HEP-Z3514	5188A
HEP-Z3516	5191A
HEP-Z3518	5194A
HEP-Z3520	5197A
HEP-Z3522	5200A
HEP-Z3524	5203A
HEP-Z3530	5212A
HEP-Z3534	5217A
HEP-Z3536	5220A
HEP-Z4014	5074A
HEP=S5025	154
HEPC0902P	9668
HEPC0903P	9669
HEPC0904P	9670
HEPC0906P	9664
HEPC0907P	9682
HEPC0908P	9681
HEPC1030P	9930
HEPC1032P	9932
HEPC1033P	9933
HEPC1035P	9935
HEPC1036P	9936
HEPC1044P	9944
HEPC1045P	9945
HEPC1046P	9946
HEPC1052P	9099
HEPC1053P	9093
HEPC1057P	9157
HEPC1058P	9158
HEPC1062P	9962
HEPC2005P	9989
HEPC3000L	7400
HEPC3000P	7400
HEPC3001L	7401
HEPC3001P	7401
HEPC3002P	7402
HEPC3004L	7404
HEPC3004P	7404
HEPC3010L	7410
HEPC3010P	7410
HEPC3020L	7420
HEPC3020P	7420
HEPC3030L	7430
HEPC3030P	7430
HEPC3040L	7440
HEPC3040P	7440
HEPC3050L	7450
HEPC3050P	7450
HEPC3073L	7473
HEPC3073P	7473
HEPC3075L	7475
HEPC3075P	7475
HEPC3800L	7490
HEPC3800P	7490
HEPC3801L	7492
HEPC3801P	7492
HEPC4000P	4000
HEPC4001P	4001B
HEPC4002P	4002B
HEPC4030P	4030B
HEPC4040P	4040B
HEPC4042P	4042B
HEPC4050P	4050B
HEPC4052P	4052B
HEPC4055P	4055B
HEPC6001	703
HEPC6007	754
HEPC6019	754
HEPC6050G	973
HEPC6052P	941M
HEPC6055L	725
HEPC6056P	722
HEPC6059P	746
HEPC6060P	1006
HEPC6062P	708
HEPC6063P	1045
HEPC6068P	722
HEPC6069G	780
HEPC6070P	714
HEPC6075P	738
HEPC6076P	749
HEPC6079P	1142
HEPC6080P	721
HEPC6082P	709
HEPC6083P	1045
HEPC6085P	731
HEPC6090	804
HEPC6094P	1006
HEPC6096P	801
HEPC6100P	783
HEPC6101P	723
HEPC6103P	909
HEPC6112P	964
HEPC7400P	7400
HEPC7401P	7401
HEPC7402P	7402
HEPC7404P	7404
HEPC7405P	7405
HEPC7406P	7406
HEPC7408P	7408
HEPC7410P	7410
HEPC7413P	7413
HEPC7420P	7420
HEPC7427P	7427
HEPC7432P	7432
HEPC7447AP	7447
HEPC7448P	7448
HEPC7451P	7451
HEPC7473P	7473
HEPC7474P	7474
HEPC7475P	7475
HEPC7476P	7476
HEPC7485P	7485
HEPC7486P	7486
HEPC7490AP	7490
HEPC7492AP	7492
HEPC7493AP	7493A
HEPC74123P	74123
HEPC74145P	74145
HEPC74150P	74150
HEPC74154P	74154
HEPC74192P	74192
HEPC74193P	74193
HEPC74196P	74196
HEPF0010	456
HEPF0015	133
HEPF0021	312
HEPF2004	222
HEPF2007	222
HEPF2007A	222
HEPG0001	126
HEPG0002	160
HEPG0003	160
HEPG0004	100
HEPG0005	100
HEPG0005P/G	100
HEPG0006	100
HEPG0006P/G	100
HEPG0007	100
HEPG0007P/G	100
HEPG0008	126
HEPG0009	126
HEPG0010	126
HEPG0011	101
HEPG6000	104
HEPG6000P/G	104
HEPG6001	179
HEPG6001P/G	179
HEPG6002	28
HEPG6003	104
HEPG6003P/G	104
HEPG6004	105
HEPG6005	121
HEPG6005P/G	104
HEPG6006	213
HEPG6007	127
HEPG6007P/G	127
HEPG6008	127
HEPG6008P/G	127
HEPG6009	179
HEPG6009P/G	179
HEPG6010	213
HEPG6011	176
HEPG6013	104
HEPG6013P/G	104
HEPG6014P/G	179
HEPG6015	179
HEPG6015P/G	179
HEPG6016	131
HEPG6017	127
HEPG6017P/G	127
HEPG6018	179
HEPG6018P/G	179
HEPR0700	112
HEPR0600	506
HEPR0050	116
HEPR0080	156
HEPR0090	156
HEPR0051	116
HEPR0052	116
HEPR0053	116
HEPR0054	116
HEPR0055	125
HEPR0056	125
HEPR0081	156
HEPR0082	156
HEPR0084	156
HEPR0086	156
HEPR0091	156
HEPR0092	156
HEPR0094	156
HEPR0096	156
HEPR0097	156
HEPR0098	156
HEPR0130	5874
HEPR0130R	5871
HEPR0160	5990
HEPR0160R	5941
HEPR0170	125
HEPR0250	5990
HEPR0250R	5891
HEPR0602	506
HEPR0604	506
HEPR0606	506
HEPR0131	5874
HEPR0131R	5873
HEPR0132	5874
HEPR0132R	5875
HEPR0134	5878
HEPR0134R	5879
HEPR0136	5882
HEPR0136R	5883
HEPR0137	5886
HEPR0137R	5887
HEPR0138	5890
HEPR0138R	5891
HEPR0161	5990
HEPR0161R	5943
HEPR0162	5990
HEPR0162R	5945
HEPR0164	5990
HEPR0164R	5949
HEPR0166	5952
HEPR0166R	5953
HEPR0251	5990
HEPR0251R	5893
HEPR0253	5990
HEPR0253R	5987
HEPR0254	5990
HEPR0254R	5989
HEPR0255	5990
HEPR0255R	5991
HEPR0256	5992
HEPR0256R	5993
HEPR0257	5994
HEPR0257R	5995
HEPR0875	5324
HEPR0876	5324
HEPR0877	5324
HEPR0878	5324
HEPR1001	5400
HEPR1002	5401
HEPR1003	5402
HEPR1004	5403
HEPR1005	5404
HEPR1202	5515
HEPR1205	5515
HEPR1218	5414
HEPR1220	5442
HEPR1221	5444
HEPR1222	5446
HEPR1223	5448
HEPR1241	5494
HEPR1242	5494
HEPR1243	5494
HEPR1244	5494
HEPR1245	5494
HEPR1246	5486
HEPR1247	5487
HEPR1300	5545
HEPR1301	5545
HEPR1302	5545
HEPR1304	5545
HEPR1306	5545
HEPR1307	5545
HEPR1471	5545
HEPR1472	5545
HEPR1473	5545
HEPR1475	5545
HEPR1721	5622
HEPR1722	5623
HEPR1781	5681
HEPR1782	5682
HEPR1783	5683
HEPR1785	5685
HEPR2001	6403
HEPR2002	6407
HEPR2021	6404
HEPR2503	614
HEPR3010	506
HEPR3012	525
HEPR3100	513
HEPR3201	522
HEPR3203	500A
HEPR9001	113A
HEPR9134	109
HEPR9134A	109
HEPR9135	109
HEPS0001	194
HEPS0002	123AP
HEPS0003	192
HEPS0004	123AP
HEPS0005	287
HEPS0006	234
HEPS0007	194
HEPS0008	229
HEPS0010	229
HEPS0020	108
HEPS0030	123AP
HEPS0040	123AP
HEPS0011	123AP
HEPS0011-RT	123A
HEPS0012	129
HEPS0013	106
HEPS0014	192
HEPS0014-RT	123A
HEPS0015	123AP
HEPS0016	108
HEPS0017	229
HEPS0017-RT	161
HEPS0019	106
HEPS0021	108
HEPS0022	123AP
HEPS0023	199
HEPS0024	199
HEPS0025	123AP
HEPS0026	159
HEPS0027	287
HEPS0028	288
HEPS0029	288
HEPS0031	234
HEPS0032	159
HEPS0033	229
HEPS0034	123AP
HEPS0035	123AP
HEPS0036	123AP
HEPS0037	159
HEPS0038	123AP
HEPS0039-RT	316
HEPS3001	224
HEPS3002	224
HEPS3004	224
HEPS3005	347
HEPS3006	349
HEPS3007	351
HEPS3008	311
HEPS3009	320
HEPS3010	224
HEPS3011	195A
HEPS3012	129
HEPS3013	311
HEPS3014	311
HEPS3019	190
HEPS3020	224
HEPS3021	191
HEPS3022	191
HEPS3023	210
HEPS3024	210
HEPS3025	210
HEPS3026	188
HEPS3027	211
HEPS3028	211
HEPS3029	211
HEPS3030	189
HEPS3031	189
HEPS3032	189
HEPS3033	154
HEPS3034	154
HEPS3035	154
HEPS3036	318
HEPS3037	317
HEPS3038	278
HEPS5000	184
HEPS5001	182
HEPS5002	183
HEPS5003	184
HEPS5004	182
HEPS5005	183
HEPS5006	185
HEPS5007	185
HEPS5008	183
HEPS5009	183
HEPS5010	183
HEPS5011	124
HEPS5012	175
HEPS5013	129
HEPS5014	224
HEPS5015	157
HEPS5018	218
HEPS5019	175
HEPS5020	163A
HEPS5021	165
HEPS5022	294
HEPS5023	129
HEPS5024	154
HEPS5025	154
HEPS5026	128
HEPS7000	181
HEPS7001	180
HEPS7002	130
HEPS7003	219
HEPS7004	181
HEPS7005	165
HEPS9001	6402
HEPS9002	6401
HEPS9100	172A
HEPS9101	253
HEPS9120	232
HEPS9140	243
HEPS9141	244
HEPZ0206	134A
HEPZ0208	134A
HEPZ0210	5069A
HEPZ0220	140A
HEPZ0230	5079A
HEPZ0401	134A
HEPZ0402	134A
HEPZ0403	134A
HEPZ0405	5069A
HEPZ0406	135A
HEPZ0407	136A
HEPZ0408	137A
HEPZ0409	5071A
HEPZ0410	138A
HEPZ0420	5077A
HEPZ0430	5088A
HEPZ0440	5097A
HEPZ0211	135A
HEPZ0212	136A
HEPZ0214	137A
HEPZ0215	5071A
HEPZ0216	138A
HEPZ0217	5072A
HEPZ0219	139A
HEPZ0222	142A
HEPZ0225	145A
HEPZ0228	5077A
HEPZ0231	5080A
HEPZ0234	146A
HEPZ0254	5053A
HEPZ0255	5100A
HEPZ0411	5072A
HEPZ0412	139A
HEPZ0413	140A
HEPZ0414	5074A
HEPZ0415	142A
HEPZ0416	142A
HEPZ0417	145A
HEPZ0418	145A
HEPZ0419	145A
HEPZ0421	5079A
HEPZ0422	5080A
HEPZ0423	5081A
HEPZ0424	146A
HEPZ0425	5083A
HEPZ0426	147A
HEPZ0427	147A
HEPZ0428	5086A
HEPZ0432	5088A
HEPZ0433	149A
HEPZ0436	150A
HEPZ0438	5096A
HEPZ0439	151A
HEPZ0442	5100A
HEPZ0444	5103A
HEPZ0445	5105A
HEPZ2500	5111A
HEPZ2502	5113A
HEPZ2504	5115A
HEPZ2506	5117A
HEPZ2508	5119A
HEPZ2510	5121A
HEPZ2513	5124A
HEPZ2514	5125A
HEPZ2516	5127A
HEPZ2519	5131A
HEPZ2522	5133A
HEPZ2525	5136A
HEPZ2526	5137A
HEPZ2528	5139A
HEPZ2530	5141A
HEPZ2531	5142A
HEPZ2537	5148A
HEPZ2542	5153A
HEPZ2545	5156A
HEPZ2547	5158A
HEPZ2548	5159A
HEPZ2551	5100A
HEPZ3500	5174AK
HEPZ3502	5176AK
HEPZ3504	5178AK
HEPZ3505	5180AK
HEPZ3507	5182AK
HEPZ3511	5185A
HEPZ3512	5186A
HEPZ3514	5188A
HEPZ3516	5191A
HEPZ3518	5194A
HEPZ3520	5197A
HEPZ3522	5200A
HEPZ3524	5203A
HEPZ3530	5212A
HEPZ3534	5217A
HEPZ3536	5220A
HER101	587
HER102	587
HER103	587
HER151	588
HER152	588
HER153	588
HER154	576
HER155	576
HER301	588
HER302	588
HER303	588
HER304	576
HER305	576
HER306	577
HER307	577
HER308	577
HER310	577
HER501	576
HER502	576
HER503	576
HER504	576
HER505	576
HER506	577
HER507	577
HER508	577
HER1601	6244
HER1602	6244
HER1603	6244
HER1604	6241
HER1605	6241
HER1606	6241
HER-RO257	5994
HERR3201	522
HERR3203	500A
HF0W05	116
HF1	558
HF1A	506
HF1B	506
HF1C	506
HF1Z	506
HF2	123AP
HF3	123AP
HF3H	160
HF3M	160
HF4	123AP
HF5	123AP
HF6	123AP
HF6H	160
HF6M	160
HF7	123AP
HF8	123AP
HF9	128
HF10	129
HF11	186
HF11(PHILCO)	128
HF12	187
HF12(PHILCO)	129
HF12H	160
HF12M	160
HF12N	160
HF15	186
HF16	187
HF17	199
HF19	121
HF20	121
HF20H	160
HF20M	160
HF22	130
HF23	180
HF24	181
HF25	180
HF40	194
HF43	171
HF47	234
HF50	123AP
HF50H	160
HF50M	160
HF51	187
HF57	152
HF58	153
HF20032	177
HF20060	177
HF20066	116
HF200191A	132
HF200191A0	132
HF200191A-0	132
HF200191A/	133
HF200191A0	312
HF200191B0	132
HF200191B-0	132
HF200191B0	133
HF200301B	133
HF200301B0	133
HF200301B0	133
HF200301C-0	133
HF200301C-0	133
HF200301E	222
HF200411B	132
HF200411C0	312
HF309301E	199
HF2000411B	132
HF-0SW05	116
HF-1	552
HF-1A	552
HF-1B	506
HF-1C	506
HF-1S85	614
HF-1S334	139A
HF-1S339	139A
HF-1S553	614
HF-1Z	506
HF-17	506
HF-19D	179
HF-35	160
HF-40	123AP
HF-47	106
HF-10024	109
HF-20002	614
HF-20004	139A
HF-20005	614
HF-20007	614
HF-20008	109
HF-20011	139A
HF-20014	177
HF-20032	116
HF-20033	5071A
HF-20034	177
HF-20035	614
HF-20040	614
HF-20041	142A
HF-20042	116
HF-20046	614
HF-20047	116
HF-20048	177
HF-20050	116
HF-20052	116
HF-20060	177
HF-20061	177
HF-20062	614
HF-20063	519
HF-20064	177
HF-20065	139A
HF-20066	605A
HF-20067	116
HF-20071	125
HF-20080	614
HF-20083	116
HF-20084	116
HF-20088	110MP
HF-20094	614
HF-20095	177
HF-20105	116
HF-20116	614
HF-20124	177
HF-DS410	177
HF-MV2	177
HF-SD-1A	116
HF-SD-1C	116
HF-SD-1Z	116
HF-SD1	116
HF-SD1/BB-4	506
HFC4045B	4045B
HFOW05	116
HFSD1	506
HFSD1A	116
HFSD1B	116
HFSD1Z	506
HFSD12	156
HFSD-1	506
HFSD-1A	506
HFSD-1B	506
HFSD-1C	506
HFSD-1C(SEARS)	506
HFSD-1Z	506
HFSD-14	506
HFSG005	116
HG1090	109
HG5002	109
HG5004	109
HG5006	109
HG5007	109
HG5008	109
HG5009	109
HG5078	109
HG5079	109
HG5085	109
HG5088	109
HG5808	109
HG-R10	116
HGR1	116
HGR2	116
HGR3	116
HGR4	116
HGR-5	116
HGR-10	116
HGR-20	116
HGR-30	116
HGR-40	116
HGR-60	116
HI23SC	5651
HI23SD	5651
HI23SG	5651
HI23SH	5641
HI23SS	5651
HI43SC	5652
HI43SG	5652
HI43SH	5642
HI43SS	5652
HI63SC	5653
HI63SG	5653
HI63SH	5643
HI63SS	5653
HIFI	116
HIIA2	3042
HIIA3	3040
HIIA5100	3041
HIIC1	3046
HIIC2	3046
HIIC3	3046
HIIC4	3046
HIIC5	3046
HIIC6	3046
HIT216	56030
HIT225	56030
HIT240	56030
HIT416	56030
HIT425	56030
HIT440	56030
HIT616	56031
HIT625	56031
HIT640	56031
HIT5609C	85
HIT8550B	159
HIT8550R	159
HIT9011	123AP
HIT9011G	123AP
HIT9011H	123AP
HIT9012E	159
HIT9013G	85
HIT9014	123AP
HIT9014A	123AP
HIT9014B	123AP
HIT9014C(EBC)	199
HIT9014D(EBC)	199
HIT9014N	123AP
HIT9014N-C	123AP
HIT9015	159
HIT9016G	108
HJ15	102A
HJ15D	160
HJ17	102A
HJ17D	102A
HJ22	102A
HJ22D	102A
HJ23	102A
HJ23D	102A
HJ32	160
HJ34	160
HJ34A	160
HJ35	104
HJ37	160
HJ41	100
HJ43	102A
HJ50	102A
HJ51	102A
HJ54	102A
HJ55	160
HJ56	160
HJ57	160
HJ60	102A
HJ60A	160
HJ60C	160
HJ62	102A
HJ70	160
HJ71	158
HJ72	158
HJ73	158
HJ74	158
HJ75	160
HJ226	158
HJ228	158
HJ230	158
HJ315	158
HJ606	102A
HJX2	102A
HK-00330	133
HK-00049	312
HKT-158	123AP
HKT-161	123AP
HL18998	7400
HL18999	7474
HL19000	7404
HL19001	7410
HL19002	7473
HL19003	7420
HL19004	7402
HL19005	7403
HL19006	7493A
HL19008	74121
HL19009	7442
HL19010	7476
HL19011	7440

PART NUMBER	NTE REPLACEMENT
HL19012	7475
HL19013	7430
HL19014	7486
HL19015	7490
HL24510	941
HL24592	925
HL24593	941
HL24630	909
HL53424	9930
HL53426	9935
HL53428	9944
HL53429	9946
HL55660	7411
HL55663	74S138
HL55723	74S153
HL55763	7408
HL55764	74153
HL55861	74150
HL55862	7404
HL56320	74S10
HL56420	7400
HL56421	7404
HL56422	7420
HL56423	7430
HL56424	7438
HL56425	7474
HL56426	7485
HL56427	7495
HL56429	74192
HL56430	74193
HL56842	7483
HL56899	7410
HL-55661	74S00
HM6.8	5014A
HM6.8A	5014A
HM7.5	5015A
HM7.5A	5015A
HM8.2	5016A
HM8.2A	5016A
HM9.1	5018A
HM9.1A	5018A
HM9.1B	139A
HM10	5019A
HM10A	5019A
HM10B	140A
HM11	5020A
HM11A	5020A
HM12	5021A
HM12A	5021A
HM12B	142A
HM13	5022A
HM13A	5022A
HM15	5024A
HM15A	5024A
HM15B	145A
HM16	5025A
HM16A	5025A
HM18	5027A
HM18A	5027A
HM20	5029A
HM20A	5029A
HM22	5030A
HM22A	5080A
HM24	5031A
HM24A	5031A
HM27	5033A
HM27A	5033A
HM27B	146A
HM30	5035A
HM30A	5035A
HM33	5036A
HM33A	5036A
HM36	5037A
HM36A	5037A
HM39	5038A
HM39A	5038A
HM43	5039A
HM43A	5039A
HM47	5040A
HM47A	5040A
HM51	5041A
HM51A	5089A
HM56	5042A
HM56A	5042A
HM62	5044A
HM62A	5044A
HM68	5045A
HM68A	5045A
HM75	5046A
HM75A	5046A
HM82	5047A
HM82A	5047A
HM91	5049A
HM91A	5049A
HM100	5050A
HM100A	5050A
HM110	5051A
HM110A	5051A
HM120	5052A
HM120A	5052A
HM130	5053A
HM130A	5053A
HM150	5055A
HM150A	5055A
HM160	5056A
HM160A	5056A
HM180	5058A
HM180A	5058A
HM200	5060A
HM200A	5060A
HM4864-3	4164
HM4864P-2	4164
HM6116	2128
HM6116P-3	2128
HM50256	21256
HM50256-15	21256
HM435101-1	65101
HM462708	2708
HM462708G	2708
HM462716	2716
HM462716G	2716
HM472114P-3	2114
HM-00049	100
HM-08014	102A
HN27128	21128
HN27128-25	21128
HN462532	2532
HN462532G	2532
HN462716G-HM1-C2	2716
HN462716G-HM2-C2	2716
HN462732	2732A
HN462732G	2732A
HN482732-30	2732A
HN482732AG	2732A
HN482732AG-20	2732A
HN482732AG-25	2732A
HN482732AG-30	2732A
HN482764-3	2764
HN482764-4	2764
HN482764G	2764
HN482764G-3	2764
HN-00002	177
HN-00003	109
HN-00005	142A
HN-00008	116
HN-00101	136A
HN-0002	177
HN-00012	139A
HN-00018	116
HN-00024	139A
HN-00029	116
HN-00032	116
HN-00033	614
HN-00045	614
HN-00052	614
HN-00053	601
HN-00061	140A
HN-0047	177
HNS040	5539
HNS025	5539
HNS125	5539
HNS140	5539
HNS225	5539
HNS240	5539
HNS425	5539
HNS440	5539
HNS625	5540
HNS640	5540
HNT216	56033
HNT225	56033
HNT240	56033
HNT416	56033
HNT425	56033
HNT440	56033
HNT616	56033
HNT625	56033
HNT640	56033
HO70	118
HO89	142A
HO91	109
HO99	120
HO300	127
HP80	109
HP205	116
HP4510	3092
HP5082-2800	583
HP5082-2810	584
HP5082-2811	584
HP-5A	116
HPF1025	723
HR1	160
HR2	160
HR2A	102
HR3	102
HR4	102
HR4A	100
HR5	100
HR5A	116
HR5A8E	116
HR5B	116
HR6	102
HR7	160
HR7A	102
HR8	102
HR8A	100
HR9	102
HR9A	100
HR10	116
HR11	116
HR11A	123AP
HR11B	123AP
HR12A	128
HR12B	128
HR12C	128
HR12D	128
HR12E	128
HR12F	128
HR13	116
HR13A	123AP
HR14	123AP
HR14A	123AP
HR15	126
HR15A	123AP
HR16	123AP
HR16A	123AP
HR17	123AP
HR17A	123AP
HR18	123AP
HR18A	123AP
HR19	123AP
HR19A	123AP
HR20	160
HR20A	160
HR21	160
HR21A	160
HR22	160
HR22A	160
HR22B	160
HR24	160
HR24A	160
HR25	160
HR25A	160
HR26	160
HR26A	160
HR27	160
HR27A	160
HR28	128
HR29	128
HR30	158
HR32	123AP
HR36	123AP
HR37	123AP
HR38	192
HR39	107
HR40	160
HR41	160
HR42	160
HR43	160
HR44	160
HR45	160
HR46	160
HR47	199
HR48	123AP
HR50	160
HR51	160
HR52	160
HR53	102A
HR58	108
HR59	108
HR60	108
HR61	102A
HR62	123AP
HR63	123AP
HR64	123AP
HR65	123AP
HR66	123AP
HR67	192
HR69	152
HR70	153
HR71	159
HR72	193
HR76	107
HR77	229
HR78	229
HR79	107
HR80	107
HR81	128
HR82	192
HR83	192
HR84	106
HR84(NPN)	123AP
HR84(PNP)	159
HR85	210
HR86	211
HR87	229
HR101	104
HR101A	121
HR102	121
HR102C	121
HR103	121
HR103A	121
HR105	121
HR105A	121
HR105B	121
HR106	124
HR107	124
HR107H	175
HR200	5082A
HR1000	156
HR40836	160
HR40837	160
HR43835	160
HR45838	160
HR45910	160
HR45913	160
HR104961C	187
HR105611C	193
HR448636	160
HR-05A	116
HR-1	102A
HR-1S85	614
HR-2	102A
HR-2A	102A
HR-2A(PENNCREST)	116
HR-3	102A
HR-4	102A
HR-4A	102A
HR-5	158
HR-5A	116
HR-5AX2	116
HR-5B	116
HR-6	102A
HR-7	102A
HR-7A	102A
HR-8	102A
HR-8A	102A
HR-9	102A
HR-9A	102A
HR-11	123AP
HR-11A	123AP
HR-11B	123AP
HR-13	123AP
HR-13A	123AP
HR-14	199
HR-14A	123AP
HR-15	199
HR-15A	123AP
HR-16	123AP
HR-16A	123AP
HR-17	123AP
HR-17A	123AP
HR-18	123AP
HR-18A	123AP
HR-19	123AP
HR-19A	123AP
HR-19E	179
HR-20	160
HR-20A	160
HR-21	160
HR-21A	160
HR-22	160
HR-22A	160
HR-22B	160
HR-24	160
HR-24A	160
HR-25	160
HR-25A	160
HR-26	160
HR-26A	160
HR-27	160
HR-27A	160
HR-30	126
HR-32	123AP
HR-36	123AP
HR-37	123AP
HR-38	123AP
HR-39	102A
HR-40	160
HR-43	160
HR-45	160
HR-47	199
HR-48	123AP
HR-58	107
HR-59	107
HR-60	123AP
HR-61	102
HR-67	192
HR-68	196
HR-69	186
HR-70	187
HR-71	159
HR-72	193
HR-73	210
HR-74	211
HR-75	199
HR-84	106
HR-101A	121
HR-106	124
HR-107(PHILCO)	175
HR-200	5802
HS07	5427
HS1/7	118
HS1/9	118
HS5	102A
HS7/1	118
HS7/17M	118
HS7/17N	118
HS8	118
HS8/1	118
HS9/1	118
HS9/17M	505
HS9/17N	505
HS10/1	503
HS12	5061A
HS15	102
HS15(SANYO)	503
HS15-1C	503
HS15/1	505
HS15/1C	503
HS15/16	503
HS17	5427
HS17D	102A
HS20(SONY)	503
HS20-1	503
HS20-1A	503
HS20-1B	503
HS20-1BS	503
HS20-12	503
HS20-16S	503
HS20/1	504
HS20/1A5	503
HS20/1AS	504
HS20/16	503
HS20/16S	505
HS22D	126
HS23D	102
HS24	5408
HS25	504
HS25-1	505
HS25-1C	504
HS25/1	504
HS25/1AS	503
HS25/1B	505
HS25/1BS	505
HS25/1C	505
HS25/12S	503
HS25/16	505
HS27	5427
HS29D	126
HS30	504
HS30-1B	504
HS30-1C	505
HS30-16	504
HS30/1C	505
HS37	5428
HS47	5428
HS57	5429
HS67	5429
HS74LS148P	74LS148
HS74S11S	74S11
HS102	102A
HS133	112
HS170	102
HS251C	505
HS290	102
HS811	118
HS902A	112
HS1001	116
HS1002	116
HS1003	116
HS1007	116
HS1008	116
HS1009	116
HS1010	116
HS1011	116
HS1012	116
HS1020	116
HS2027	5002A
HS2033A	5005A
HS2036	134A
HS2039	134A
HS2047	135A
HS2051	135A
HS2056	136A
HS2062	137A
HS2091	139A
HS2100	140A
HS2120	142A
HS2150	145A
HS2165	5075A
HS2270	146A
HS2330	147A
HS2516	505
HS3103	116
HS3104	116
HS3108	125
HS3110	125
HS5404	159
HS5810	192
HS5811	193
HS5812	192
HS5813	193
HS5814	192
HS5815	193
HS5816	192
HS5817	193
HS5818	192
HS5819	193
HS5820	192
HS5821	193
HS5822	192
HS5823	193
HS6010	192
HS6011	193
HS6012	192
HS6013	193
HS6014	192
HS6015	193
HS6016	192
HS6017	193
HS7027	5002A
HS7033	5005A
HS7036	134A
HS7039	134A
HS7051	135A
HS7056	136A
HS7062	137A
HS7091	139A
HS7100	140A
HS7120	142A
HS7150	145A
HS7270	146A
HS7330	147A
HS40021	161
HS40022	161
HS40023	161
HS40024	161
HS40025	161
HS40026	128
HS40032	129
HS40046	123AP
HS40049	108
HS-1B	504
HS-7/1	118
HS-8/1	118
HS-9/1	118
HS-15	102
HS-15/1C	503
HS-20	503
HS-22D	102
HS-30/1B	504
HS-1168	123AP
HS-1225	108
HS-1226	108
HS-1227	108
HS-1229	123AP
HS-40014	123A
HS-40016	123A
HS-40017	229
HS-40019	108
HS-40020	123AP
HS-40027	159
HS-40030	108
HS-40031	159
HS-40035	106
HS-40037	123AP
HS-40039	123AP
HS-40040	159
HS-40044	123AP
HS-40045	108
HS-40046	123AP
HS-40047	108
HS-40050	159
HS-40053	106
HS-40054	319P
HS-40055	123AP
HS-40057	290
HS-90028	159
HSA1015	290A
HSC1	125
HSC1815	85
HSC-1	156
HSFD1	506
HSFD-1A	116
HSFD-1A(SONY)	506
HSFD-1Z	116
HSFD-1Z(SONY-BLANK)	506
HSFD-1Z(SONY-BLANKIN	506
HSFD-1Z(SONY-STANDBY	116
HST1050	162
HST1051	163A
HST1052	163A
HST1053	163A
HST1054	163A
HST1055	162
HST1056	163A
HST1057	163A
HST1058	163A
HST1059	163A
HST1060	162
HST1061	163A
HST1062	163A
HST1063	163A
HST1064	163A
HST4451	171
HST4452	171
HST4453	171
HST4454	171
HST4483	224
HST5001	199
HST5002	171
HST5003	171
HST5004	171
HST5005	171
HST5006	171
HST5007	171
HST5008	171
HST5009	171
HST5010	171
HST5051	171
HST5052	171
HST5053	171
HST5054	171
HST5055	171
HST5056	171
HST5501	224
HST5502	171
HST5503	171
HST5504	171
HST5505	171
HST5506	224
HST5507	171
HST5508	171
HST5509	171
HST5510	171
HST5511	224
HST5551	171
HST5552	171
HST5553	171
HST5554	171
HST5555	171
HST5556	171
HST5906	236
HST7401	224
HST7402	171
HST7403	171
HST7411	224
HST7412	171
HST7413	171
HST7414	224
HST7415	171
HST7416	171
HST7417	224
HST7418	198
HST7419	198
HST7901	198
HST7902	198
HST7903	198
HST7904	198
HST7905	198
HST7907	198
HST7908	198
HST7909	198
HST7910	198
HST9001	224
HST9002	171
HST9003	171
HST9004	224
HST9005	171
HST9006	171
HST9007	224
HST9008	171
HST9009	171
HST9010	224
HST-9201	130
HST-9205	130
HST-9206	130
HST-9210	130
HSZ12EB3	5021T1
HT040519C	103
HT040519C(2SB405)	158
HT040519C(2SD72)	103A
HT0405190C(NPN)	103A
HT0405190C(PNP)	102A
HT28	6407
HT32	6408
HT40	6411
HT60	6412
HT100	159
HT101	159
HT400	123AP
HT401	123AP
HT10234UB	160
HT20436A	131
HT20451A	158
HT30491C	128
HT30494	130
HT30494X	130
HT36441B	199
HT38281D	123AP
HT101011X	126
HT101021A	126
HT102341	160
HT102341A	160
HT102341B	160
HT102341C	160
HT102351	160
HT102351A	160
HT103501	160
HT103501A	126
HT103531C	126
HT103541B	126
HT104861	128
HT104861A	128
HT104861B	128
HT104941B-0	159
HT104941B-0	159
HT104941C0	159
HT104941C-0	159
HT104941C-0	106
HT104941C0	106
HT104942A	159
HT104951A-0	159
HT104951A-0	106
HT104951B	159
HT104951B-0	159
HT104951C	159
HT104961B	185
HT104961C	184
HT104971A	129
HT104971A0	129
HT104971A-0	129
HT104971A-0	129
HT104971A0	129
HT105611	159
HT105611A	159
HT105611B	159
HT105611B0	159
HT105611B0	159
HT105611C	159
HT105612B	159
HT105621B0	159
HT105621B-0	159
HT105621B-0	106
HT105621B0	159
HT105641C	234
HT105641D	234
HT105641H	234
HT105642B	234
HT106731B	159
HT106731B0	290
HT107211T	234
HT107331Q0	294
HT200540	102A
HT200540A	102A
HT200541	102A
HT200541A	102A
HT200541B	102A
HT200541B-0	102A
HT200541C	160
HT200561	102A
HT200561A	102A
HT200561B	102A
HT200561C	102A
HT200561C-0	102A
HT200751B	102A
HT200770B	102A
HT200771	102A
HT200771A	102A
HT200771B	102A
HT200771C	158
HT201721A	102A
HT201721D	102A
HT201725A	102A
HT201782A	102A
HT201861A	102A
HT201871L	102A
HT203243A	158
HT203701	102A
HT203701A	102A
HT203701B	102A
HT204051	158
HT204051B	158
HT204051C	158
HT204051D	158
HT204051E	158
HT204053	158
HT204053A	158
HT204053B	158
HT204071D	121
HT204736	131
HT303620B	123AP
HT303711A	107
HT303711A0	123AP
HT303711A-0	108
HT303711A-0	123AP
HT303711A0	123AP
HT303711B	107

PART NUMBER	NTE REPLACEMENT
HT303711B0	123AP
HT303711B-0	123AP
HT303711B-0	123AP
HT303711B0	123AP
HT303711C	107
HT303720A	108
HT303721-0	123AP
HT303721D	123AP
HT303730	123AP
HT303730A	123AP
HT303801	107
HT303801A	107
HT303801A0	107
HT303801A0	123AP
HT303801B	107
HT303801B0	107
HT303801B-0	107
HT303801B-0	123AP
HT303801B0	123AP
HT303801C	107
HT303801C0	107
HT303801C0	123AP
HT30387100	316
HT303941	108
HT303941A	108
HT303941B	108
HT304508K	123AP
HT304531	123AP
HT304531A	123AP
HT304531B	123AP
HT304531C	123AP
HT304540A0	108
HT304540A0	123AP
HT304540B0	123AP
HT304540B0	123AP
HT304580	123AP
HT304580A	123AP
HT304580B	123AP
HT304580C0	123AP
HT304580C0	123AP
HT304580K	123AP
HT304580Y0	123AP
HT304580Y0	123AP
HT304580Z	123AP
HT304581	123AP
HT304581A	123AP
HT304581B	123AP
HT304581B-0	123AP
HT304581B-0	123AP
HT304581C	123AP
HT304601B0	233
HT304601B0	123AP
HT304601C0	108
HT304601C0	123AP
HT304611B	108
HT304861	128
HT304861A	128
HT304861B	123AP
HT304911	175
HT304911A	175
HT304911B	175
HT304941X	130
HT304961B	184
HT304961C	184
HT304961C-0	186
HT304961C-0	186
HT304971A	128
HT304971A0	128
HT304971A0	128
HT304971B	128
HT305351B0	229
HT305351C0	108
HT305351C0	123AP
HT305361E	123AP
HT305361G	123AP
HT305371E	123AP
HT305642B	234
HT306441	123AP
HT306441A	123AP
HT306441A0	128
HT306441A0	128
HT306441B	123AP
HT306441B0	123AP
HT306441B-0	123AP
HT306441B-0	128
HT306441B0	128
HT306441C	123AP
HT306441C-0	123AP
HT306441C-0	128
HT306442A	199
HT306442B	199
HT306451	108
HT306451A	107
HT306451B	108
HT306451H	123AP
HT306681C	108
HT306962A-0	108
HT306962A-0	123AP
HT307321A	123AP
HT307321B-0	123AP
HT307321B-0	123AP
HT307322A	123AP
HT307331B	123AP
HT307331C	123AP
HT307331C0	123AP
HT307341	128
HT307341A	128
HT307341B	123AP
HT307341C-0	123AP
HT307341C-0	128
HT307342B	128
HT307342C	128
HT307720B	107
HT307721C	107
HT307721D	107
HT307902B	184
HT308281B	123AP
HT308281C	123AP
HT308281D	199
HT308281G	123AP
HT308281H	199
HT308281O	123AP
HT308282A	123AP
HT308282A-0	123AP
HT308282A-0	123AP
HT308282B	199
HT308291A	107
HT308291A-0	107
HT308291A-0	107
HT308291B	107
HT308291B0	229
HT308291B-0	107
HT308291B-0	123AP
HT308291B0	123A
HT308291C	107
HT308291D0	229
HT308301B0	152
HT308301B0	175
HT309002A0	199
HT309291C	108
HT309291E	107
HT309301C	199
HT309301D	107
HT309301E	199
HT309301F	199
HT309451L0	199
HT309680B	128
HT309714A-0	128
HT309714A-0	195A
HT309841B0	128
HT309841B0	128
HT309842A-0	123AP
HT309842A-0	128
HT310001F	199
HT310002A	199
HT311621B	152
HT312131C0	289
HT313171R	289
HT313172A	289
HT313181C	128
HT313271T	199
HT313272B	199
HT313592B	108
HT313681B0	184
HT313831X	293
HT313832C	293
HT313841R	293
HT314071Q	192
HT316751M0	229
HT319091O0	297
HT319571O0	295
HT340519C	103
HT400721	103A
HT400721A	103A
HT400721B	103A
HT400721C	103A
HT400721D	103A
HT400721E	103A
HT400723	103A
HT400723A	103A
HT400723B	103A
HT400770B	103A
HT401191	130
HT401191A	130
HT401191B	130
HT401193A0	280
HT401301B0	175
HT402352B	152
HT403131E0	196
HT403151E	175
HT403152A	175
HT403152B	175
HT403523A	103A
HT404001E	192
HT600011F	159
HT600011H	159
HT700111O0	242
HT800011F	123AP
HT800011G	123AP
HT800011H	123AP
HT800011K	123AP
HT800012F	128
HT800191H	128
HT1001510	102A
HT2000771C	102A
HT2040710A	121
HT2046710	131
HT3036201	123AP
HT3036210	123AP
HT3037010	108
HT3037201	108
HT3037201A	108
HT3037201B	108
HT3037210	123AP
HT3037210-0	123AP
HT3037210-0	123AP
HT3037310	107
HT3038013-B	107
HT3073310	123AP
HT3082810	128
HT6000210	159
HT8000101	154
HT8000710	116
HT8001210	128
HT8001310	128
HT8001610	161
HT8001710	161
HT8001810	123AP
HT9000410-0	130
HT9000410-0	130
HT30373100	123AP
HT30733100	199
HT-23G	177
HT-32	6408
HT-40	6411
HT-60	6412
HTZ11BL	5020A
HV0000102	102A
HV0000105	116
HV0000105-0	116
HV00001050	177
HV00001060	601
HV0000202	109
HV0000206	177
HV0000302	107
HV0000405	158
HV0000405-0	126
HV0000406	116
HV0000502	177
HV0000705	116
HV5	542
HV5-5	518
HV5-5F	518
HV5-7	518
HV5-7F	518
HV5-10	518
HV5-10F	518
HV8	542
HV10	542
HV10-5	518
HV10-5F	518
HV10-7	518
HV10-7F	518
HV10-10	518
HV10-10F	518
HV12	102A
HV12(RECT)	542
HV14	542
HV15	542
HV15(TRANS)	102A
HV16	102A
HV17	102A
HV17B	102A
HV19	102A
HV23	601
HV23(DIODE)	177
HV23(TRANS)	123AP
HV23-GBL	600
HV23F	601
HV23G	601
HV23GBL	600
HV23GWT	600
HV25	123AP
HV25(HITACHI)	177
HV25-5	518
HV25-5F	518
HV25-7	518
HV25-7F	518
HV25-10	518
HV25-10F	518
HV26	116
HV46	116
HV46(DIODE)	116
HV46GR	116
HV46GR(DIODE)	116
HV80	601
HV230BL	600
HV460R	177
HV9601	614
HV-15	109
HV-23	601
HV-23(ELGIN)	116
HV-23BL	109
HV-23G(BL)	177
HV-23GBL	600
HV-23GWT	600
HV-23GYL	601
HV-25	177
HV-25(RCA)	177
HV-26	116
HV-26G	116
HV-27	177
HV-46	605A
HV-46GR	116
HV-80	519
HV-100	116
HV-801	109
HVPR10-12	548
HVPR12-08	546
HVPR12-10	546
HVPR12-12	546
HVPR12-16	546
HVPR15-08	542
HVPR15-10	542
HVPR15-12	542
HVPR15-14	542
HVPR15-16	542
HW6.8	5071A
HW6.8A	5071A
HW7.5	138A
HW7.5A	138A
HW8.2	5072A
HW8.2A	5072A
HW9.1	139A
HW9.1A	139A
HW9.1B	139A
HW9.81B	139A
HW10	140A
HW10A	140A
HW11	5074A
HW11A	5074A
HW11B	141A
HW12	142A
HW12A	142A
HW12B	142A
HW13	143A
HW13A	143A
HW13B	143A
HW15	145A
HW15A	145A
HW15B	145A
HW16	5075A
HW16A	5075A
HW18	5077A
HW18A	5077A
HW20	5079A
HW20A	5079A
HW22	5080A
HW22A	5080A
HW24	5081A
HW24A	5081A
HW27	146A
HW27A	146A
HW27B	146A
HW30	5084A
HW30A	5084A
HW33	147A
HW33A	147A
HW33B	147A
HW36	5085A
HW36A	5085A
HW39	5086A
HW39A	5086A
HW43	5087A
HW43A	5087A
HW47	5088A
HW47A	5088A
HW51	5089A
HW51A	5089A
HW56	5090A
HW56A	5090A
HW56B	148A
HW62	149A
HW62A	149A
HW62B	149A
HW68	5092A
HW68A	5092A
HW75	5093A
HW75A	5093A
HW82	150A
HW82A	150A
HW82B	150A
HW91	5095A
HW91A	5095A
HW100	5096A
HW100A	5096A
HW110	151A
HW110A	151A
HW110B	151A
HW120	5097A
HW120A	5097A
HW130	5098A
HW130A	5098A
HW150	5100A
HW150A	5100A
HW160	5101A
HW160A	5101A
HW180	5103A
HW180A	5103A
HW200	5105A
HW200A	5105A
HX50001	108
HX50002	123AP
HX50003	107
HX-50063	123AP
HX-50072	123AP
HX-50091	229
HX-50092	123AP
HX-50094	159
HX-50097	123AP
HX-50102	5402
HX-50103	192
HX-50104	193
HX-50105	159
HX-50106	299
HX-50107	199
HX-50108	287
HX-50109	288
HX-50110	123AP
HX-50112	159
HX-50113	123AP
HX-50128	159
HX-50161	123AP
HX-50176	159
HX-50180	172A
HX-50181	123AP
HX-50190	172A
HY3045801C	123AP
HZ2C1	5000A
HZ2CLL	5000A
HZ3	134A
HZ3.6	5006A
HZ3.6CP	5006A
HZ3.6CPTA	5006A
HZ3A07	5004A
HZ3A3	5003A
HZ3ALL	5003A
HZ3B	5004A
HZ3BLL	5004A
HZ3C1	5005A
HZ3C2	5005A
HZ3C2-01	5005A
HZ3C3	5005A
HZ3C-2	5005A
HZ4	5067A
HZ4(A1)1	5006A
HZ4-A	5006A
HZ4A04	5007A
HZ4A2	5006A
HZ4A-2	5006A
HZ4B	5008A
HZ4B1	5007A
HZ4B2	5007A
HZ4B-1	5007A
HZ4B-2	5007A
HZ4C	5008A
HZ4C1	5008A
HZ4H	5067A
HZ5	5009A
HZ5.0C2	5010T1
HZ5(C)3	5010T1
HZ5B	135A
HZ5B2	5009A
HZ5B-1	5009A
HZ5B-2	5009A
HZ5C1	5010T1
HZ5C1TD	5010A
HZ5C2	5010A
HZ5C3	5010T1
HZ5C-1	5010A
HZ5C-2	5010A
HZ5C-3	5010A
HZ5HC2	5010T1
HZ6	5012A
HZ6.3	137A
HZ6(B2)	136A
HZ6(B)2	136A
HZ6(B)3	5012A
HZ6(C)	5012A
HZ6(C)1	5012A
HZ6(C)3	5013T1
HZ6-1	5012A
HZ6A	5011T1
HZ6A1	5011T1
HZ6A1V	5010A
HZ6A19	5012A
HZ6A-1	5011T1
HZ6A-1L	5010T1
HZ6A-2	5011T1
HZ6A-3	5011T1
HZ6B	5011A
HZ6B2	136A
HZ6B3	5012A
HZ6B20	5012A
HZ6B-3L	5012A
HZ6C	5012A
HZ6C1	5012A
HZ6C2	5013A
HZ6C2L	5013A
HZ6C3	5013T1
HZ6C-1	5012A
HZ6CV	5012A
HZ6CY	5012A
HZ6HC2	5013T1
HZ6HC3	5013T1
HZ6L-B2	5011T1
HZ7	5071A
HZ7(A)	5014A
HZ7(B)	5071A
HZ7(B)2	5014A
HZ7(C)1	5015A
HZ7(C)3	5015A
HZ7A	5014A
HZ7A3	5014A
HZ7A33	5014A
HZ7A-1	5014A
HZ7A-3	5014A
HZ7B	5014A
HZ7B2	5014A
HZ7B2LV1	5014A
HZ7B3	5014A
HZ7B-1	5014A
HZ7B-2L	5032A
HZ7C	5015A
HZ7C1	5015A
HZ7C3	5015A
HZ7H	138A
HZ9	5018A
HZ9.1B1	139A
HZ9(C)1	5018A
HZ9(C)3	5018A
HZ9-C1	5018A
HZ9A	5016A
HZ9A1	5016A
HZ9A2	5016A
HZ9A3	5016A
HZ9A-2	5016A
HZ9B	5073A
HZ9B3	5017A
HZ9B-2	5018A
HZ9B-3	5018A
HZ9B-3L	5073A
HZ9BZ	5017A
HZ9C1	5018A
HZ9C2	5018A
HZ9C3	5018A
HZ9C-2	5018A
HZ9C-3	5018A
HZ9H	139A
HZ11	5020A
HZ11(A)	5019T1
HZ11(B)	5019T1
HZ11(B)2	5020A
HZ11(C)	5019T1
HZ11A	5019A
HZ11A1	5019T1
HZ11A2	5019T1
HZ11A3	5019T1
HZ11A-3	5019T1
HZ11AB	5020A
HZ11B	5020A
HZ11B1	5020A
HZ11B1V	5019A
HZ11B2	5020A
HZ11B2L	5020A
HZ11B-2	5020A
HZ11B-2L	5020A
HZ11B-2LTA	5020A
HZ11C	5019T1
HZ11C2	5020A
HZ11C2-L	5020A
HZ11C2L	5020A
HZ11C25	5021A
HZ11C-1L	5020A
HZ11C-3	5020A
HZ11CL	5074A
HZ11H	5074A
HZ11L	5020A
HZ11L-1L	5020A
HZ11LC2	5020A
HZ11Y	5074A
HZ12	5021A
HZ12(A)	5021A
HZ12(B)	5021A
HZ12(B)1	5021T1
HZ12(B)2	5022A
HZ12(C1)	5021A
HZ12(C2)	5021T1
HZ12(C3)	5021T1
HZ12(C)	5021A
HZ12-3	5022A
HZ12-C	5021A
HZ12A	5021A
HZ12A1	5021T1
HZ12A2	5021T1
HZ12A3	5021T1
HZ12A-1L	5021T1
HZ12B	5021A
HZ12B1	5021T1
HZ12B2	5022A
HZ12B3	5022A
HZ12B-1	5022A
HZ12B-2	5022A
HZ12B-3	5022A
HZ12C	5021A
HZ12C3	5021T1
HZ12C-2	5023A
HZ12C-3	5023A
HZ12C-3L	5021T1
HZ12H	143A
HZ12H1	5021T1
HZ12HA2	5021T1
HZ15	145A
HZ15-1	5024A
HZ15-3	5024A
HZ15H	145A
HZ16	5075A
HZ16-2L	5025A
HZ16-3	5026A
HZ16H	5075A
HZ18	5026A
HZ18-09	5027A
HZ18-1	5026A
HZ18-2	5027A
HZ18-3	5027A
HZ20-04	5029A
HZ20-1L	5029A
HZ20-2	5029A
HZ20-3	5029A
HZ20-3L	5029A
HZ20-3T2	5029A
HZ20-3TS	5029A
HZ20-V1	5029A
HZ20TE	5029A
HZ22	5030A
HZ22-01T2	5030A
HZ22-1	5030A
HZ22-2	5030A
HZ22-2L	5030A
HZ22-3	5012A
HZ22H	5080A
HZ22L-3	5030A
HZ24	5031A
HZ24-2	5031A
HZ24-2L	5031A
HZ24-12	5031A
HZ24H	5081A
HZ24L-2	5031A
HZ27	5033A
HZ27-2	5033A
HZ27H	146A
HZ30	5035A
HZ30-1	5035A
HZ30-1L	5035A
HZ30-2L	5035A
HZ30H	5084A
HZ30PB	5084A
HZ33-2	5036A
HZ33-2L	5036A
HZ33H	147A
HZ35	5037A
HZ35-TP	5037A
HZ36-1	5037A
HZ36H	5085A
HZ53	5010T1
HZ61	5012A
HZ61A1V	5010A
HZ62	136A
HZ63	5011A
HZ71	5015A
HZ121	5021T1
HZ272	5033A
HZ303	5005A
HZ310B	5019A
HZ312A	5021A
HZ414-B3	144A
HZ502	5010A
HZ683	5012A
HZ2201T2	5080A
HZ-06C	5012A
HZ-3	5004A
HZ-3A	5004A
HZ-4	5006A
HZ-4(A1)1	5006A
HZ-4(A)1	5006A
HZ-4A	5006A
HZ-4A1	5006A
HZ-4A2	5006A
HZ-4B	5007A
HZ-4C	5008A
HZ-5C	5010T1
HZ-5C1	5010A
HZ-5C3	5010T1
HZ-5C-1	5010T1
HZ-6A	5011T1
HZ-6A2	5011A
HZ-6B	5011A
HZ-6B1	5011T1
HZ-6B3	5012A
HZ-6B-2	5011T1
HZ-6B-3	5013T1
HZ-6C	5012A
HZ-6C1	5012A
HZ-6C3	5013T1
HZ-6C-1	5012A
HZ-6C-3	5013T1
HZ-6Z	5012A
HZ-7	5014A
HZ-7(B)	5014A
HZ-7A	5014A
HZ-7A(B)	138A
HZ-7A-1	5014A
HZ-7B	5071A
HZ-7B2	5014A
HZ-7C	5014A
HZ-7C1	5015A
HZ-7C-1	5015A
HZ-7GR	138A
HZ-7NB	5014A
HZ-7SV	138A
HZ-7SVA	138A
HZ-7SVB	138A
HZ-9	139A
HZ-9A1	5016A
HZ-9B	139A
HZ-9C	5018A
HZ-9C1	5018A
HZ-9C3	5018A
HZ-9C-3	5018A
HZ-11	5074A
HZ-11(B)	5074A
HZ-11(C)-T2	5019T1
HZ-11(C)T2	5020A
HZ-11(C)TZ	5020A
HZ-11A	5019T1
HZ-11A1	5020A
HZ-11A-1	5020A
HZ-11B	5019T1
HZ-11B1	5019A
HZ-11B2	5126A
HZ-11C	5019T1
HZ-11C2L	5020A
HZ-11LC2	5020A
HZ-12	142A
HZ-12(A)	5021A
HZ-12(C3)	5021T1
HZ-12(C)	5021A
HZ-12A	5021A
HZ-12A3	5021A
HZ-12B	5022A
HZ-12B1	5021T1
HZ-12B-1	5022A
HZ-12C	5021A
HZ-15	5024A
HZ-15-1	5023A
HZ-15-2	5024A
HZ-16-1	5025A
HZ-20VC	5079A
HZ-24-2	5031A
HZ-24-3	5032A
HZ-27-1	5032A
HZ-30-3	5035A
HZ-35	5037A
HZ-66-B2	5011T1
HZ-121	5021T1
HZ-212	142A
HZ-312B	142A
HZD27-3L	5032A
HZEH	5066A
HZI33S1	5036A
HZS3.6EB1	5006A
HZS3.6EB1-TD	5006A
HZS4.7NB2-1TJ	5009A
HZS5.1B3	5010A
HZS5R1JB2-T	5010A
HZS6R2JB2-T	5013T1
HZS6R8JB2-TE	5014A
HZS9B-3	5017A
HZS11JB3-TE	5020A
HZS12B2L	5021T1
HZS12L(B2)	5021T1
HZS24-1L	5031A
HZS27-2L	5033A
HZS27-3L	5032A
HZS36-1L	5037A
HZT33	615
HZT33-01	615
HZT33-02	615P

PART NUMBER	NTE REPLACEMENT
HZT33-02-TE	615P
HZT33-02T	615
HZT33-04	615P
HZT33-04T	615P
HZT33-05	615
HZT33-10	615
HZT33-12	615
HZT33S1	615P
HZT-33	615
HZT-3301	615
I00DF01120	15007
I00DF10110	15023
I02190574J	615P
I01B98M090	1902
I01S058360	1780
I02A98L050	977
I02A978120	966
I02DC13710	1410
I02DE14020	15016
I02DF1480C	1800
I02DF1481C	1801
I02I90574J	615P
I02SD13780	1676
I02SP12770	1626
I03B98M050	960
I03B98M060	962
I03B98M090	1902
I03D040660	4066B
I03D072200	1799
I03D063240	987
I03DA7530N	1827
I03DD78000	1538
I03DE75200	15001
I03S070160	1781
I03S079100	1658
I03S063580	928S
I03SD78350	1855
I03SP44450	1704
I05D076300	1576
I05DA7607A	1545
I05DE777P	1790
I05DE7777P	1790
I05DE76440	1547
I05DE76810	1570
I031956310	615P
I039956300	615P
I2B4910410	1895
I3-33187-13	5097A
I3PS035	5534
I3PS135	5534
I3PS235	5534
I3PS335	5534
I3PS435	5534
I3PS535	5534
I3PS635	5534
I3PT030	5679
I3PT040	5679
I3PT140	5679
I3PT230	5679
I3PT240	5679
I3PT330	5679
I3PT340	5679
I3PT430	5679
I3PT440	5679
I3PT530	5679
I3PT540	5679
I3PT630	5679
I3PT640	5679
I9A115180-2	126
I9A115728-2	123AP
I51-0141-00	175
I52D040530	4053B
I52D003930	943M
I55D040010	4001B
I55D04066B	4066B
I55D04538B	4538B
I538	116
I964(6	177
I2764-2	2764
I6114	175
I6191	128
I6289	5635
I6342	197
I8255	8255
I9623	108
I9631	128
I9680	159
I12032	160
I50865	106
I81030	159
I85436	177
I98763-3	5872
I98936-2	5675
I472446-I	121
I473608-2	128
I473679-1	128
I473688-1	5404
I-B198	185
IA09500	290A
IA097000	290A
IA085000	290A
IA0020	313
IA0070	85
IA0080	199
IA090900	285
IA0012	102A
IA0013	128
IA0021	85
IA0022	313
IA0024	123AP
IA0025	85
IA0029	199
IA0032	85
IA0033	85
IA0034	199
IA0035	199
IA0037	85
IA0038	124
IA0043	199
IA0044	85
IA0045	85
IA0046	175
IA0051	85
IA0055	102A
IA0056	102A
IA0058	152
IA0059	175
IA0063	199
IA0066	128
IA0067	85
IA0079	199
IA0081	199
IA0083	85
IA0084	85
IA050910	290
IA081400	292
IA093300	290A
IA053700	129
IA053800	129
IA074500	281
IA074600	219
IA034800	85
IA095010	290A
IA045900	85
IA096800	398
IA097020	290A
IA067200	159
IA037300	85
IA088100	383
IA068200	374
IA048900	153
IA049010	153
IA09910	290A
IA049500	290A
IA099900	290A
IA034810	85
IA045820	85
IA047320	153
IA048320	213
IA048440	323
IA04854	323
IA049510	290A
IA049520	290A
IA053750	129
IA0537800	129
IA056120	290A
IA056170	290A
IA056220	290A
IA056270	290A
IA067190	292
IA067280	159
IA067310	290A
IA067330	290A
IA068270	374
IA073340	290A
IA073370	290A
IA073390	290A
IA074390	185
IA074520	281
IA074710	281
IA076330	234
IA077730	298
IA081420	292
IA081450	292
IA081460	292
IA081820	292
IA081870	292
IA084110	159
IA084410	234
IA087210	91
IA088110	383
IA091210	288
IA091430	292
IA096820	398
IA099930	290A
IA099940	290A
IA099950	290A
IA45800	85
IA45810	85
IA45830	85
IA101520	290A
IA101521	290A
IA101530	290A
IA101531	290A
IA101550	290A
IA101570	290A
IA101580	290A
IA110600	37
IA111510	290A
IA136000	126
IAA-FS-7805M	960
IAA-FS-7812M	966
IB	503
IB056000	383
IB053100	219
IB083400	197
IB064900	374
IB075500	34
IB018600	102A
IB068800	37
IB068801	37
IB059800	159
IB053620	292
IB059620	197
IB059630	197
IB064710	383
IB064720	383
IB198	185
IB50700	153
IB53620	292
IC070850	128
IC075200	85
IC048440	324
IC048480	324
IC049770	128
IC064430	199
IC073240	199
IC073410	289A
IC073520	85
IC075220	85
IC075230	85
IC098480	123AP
IC1(RCA)	711
IC2(ECS)	904
IC2(ELCOM)	704
IC5	703
IC6	711
IC11(ELCOM)	726
IC12(ELCOM)	708
IC16(ELCOM)	725
IC20(ELCOM)	784
IC23	740A
IC23(ELCOM)	784
IC23(PHILCO)	740A
IC26	1045
IC27(ELCOM)	909D
IC29(ELCOM)	904
IC30(ELCOM)	9930
IC31(ELCOM)	9936
IC32(ELCOM)	9946
IC33(ELCOM)	9093
IC34(ELCOM)	9962
IC35(ELCOM)	915
IC36(ELCOM)	925
IC37(ELCOM)	940
IC38(ELCOM)	949
IC40	703
IC40(ELCOM)	941
IC41(ELCOM)	903
IC42(ELCOM)	911
IC43(ELCOM)	923
IC46(ELCOM)	947
IC48(ELCOM)	725
IC53(ELCOM)	923D
IC91	703
IC101(COLUMBIA)	172A
IC101-109	703
IC146	1004
IC201(ELCOM)	722
IC202(ELCOM)	747
IC203(ELCOM)	749
IC204(ELCOM)	750
IC210(ELCOM)	909
IC229(ELCOM)	9945
IC285	754
IC285(ELCOM)	754
IC294(ELCOM)	746
IC297(ELCOM)	738
IC302(ELCOM)	711
IC305(ELCOM)	727
IC307(ELCOM)	780
IC308(ELCOM)	712
IC309(ELCOM)	723
IC311(ELCOM)	730
IC312(ELCOM)	714
IC317(ELCOM)	941
IC320(ELCOM)	789
IC405(ELCOM)	721
IC411(ELCOM)	910
IC500	703
IC500(IR)	703
IC501	704
IC501(IR)	704
IC502	705A
IC504	708
IC504(IR)	708
IC505	709
IC505(IR)	709
IC507	712
IC507(IR)	712
IC508(IR)	714
IC509	714
IC509(IR)	714
IC513	722
IC513(IR)	722
IC700	1024
IC1303	725
IC1303P	725
IC3014	704
IC4001BP	4001B
IC7420	7420
IC7475	7475
IC11165	284
IC23030	85
IC48520	324
IC48540	324
IC73420	289A
IC100010	278
IC103030	280
IC107920	280
IC108000	280
IC112420	190
IC116610	175
IC121290	373
IC121310	289A
IC121390	289A
IC134530	199
IC140330	284
IC144500	196
IC150930	376
IC153700	123AP
IC153750	123AP
IC157130	293
IC158600	284
IC162450	291
IC162460	291
IC166120	289A
IC168120	289A
IC173400	85
IC173500	85
IC177510	90
IC181500	85
IC181501	85
IC181510	85
IC181520	85
IC181530	85
IC181550	85
IC181570	85
IC181580	85
IC188510	399
IC195340	373
IC195350	373
IC195920	85
IC195930	85
IC198300	56
IC212000	289A
IC224000	90
IC224020	90
IC229100	128
IC232010	85
IC232040	85
IC255500	2308
IC265500	293
IC287800	85
IC333400	399
IC743038	195A
IC743039	195A
IC743040	229
IC743041	229
IC743042	123AP
IC743043	290
IC743044	289
IC743045	235
IC743046	132
IC743047	139A
IC743048	116
IC743049	519
IC743050	109
IC743051	177
IC3002271D	399
IC30022710	399
IC-06-1	722
IC-06-1(MAGNAVOX)	722
IC-06-2	722
IC-06-2(MAGNAVOX)	722
IC-1(DYNALCO)	912
IC-1(PHILCO)	703
IC-1(RCA)	711
IC-1-3304	912
IC-2(DYNALCO)	912
IC-2(PHILCO)	703
IC-2-274(DYNACO)	912
IC-4(PHILCO)	703
IC-5	703
IC-5(ELCOM)	703
IC-6	711
IC-6(ELCOM)	703
IC-6(PHILCO)	711
IC-7(PHILCO)	703
IC-8(ELCOM)	704
IC-8B	704
IC-9(ELCOM)	711
IC-11(ELCOM)	726
IC-12	708
IC-12(ELCOM)	708
IC-12(PHILCO)	714
IC-13	715
IC-15	1045
IC-15(PHILCO)	712
IC-16	780
IC-16(PHILCO)	780
IC-17(PHILCO)	746
IC-18(PHILCO)	747
IC-20	923D
IC-20(PHILCO)	923D
IC-23	740A
IC-23(ELCOM)	784
IC-23(PHILCO)	740A
IC-26(PHILCO)	712
IC-27(ELCOM)	909D
IC-28	749
IC-30	799
IC-31	1062
IC-33	731
IC-33(PHILCO)	731
IC-40(ELCOM)	941
IC-42(ELCOM)	911
IC-43(ELCOM)	923
IC-46(ELCOM)	947
IC-48(ELCOM)	725
IC-51A(TELE-SIG)	909D
IC-53(ELCOM)	923D
IC-55(ELCOM)	9924
IC-65(ELCOM)	9989
IC-71(ELCOM)	7430
IC-74(ELCOM)	7401
IC-74LS02	74LS02
IC-74LS04	74LS04
IC-74LS20	74LS20
IC-74LS75	74LS75
IC-74LS86	74LS86
IC-74LS138	74LS138
IC-74LS157	74LS157
IC-74LS165	74165
IC-74LS193	74LS193
IC-75(ELCOM)	7450
IC-79(ELCOM)	7495
IC-80(ELCOM)	7400
IC-81(ELCOM)	7493A
IC-82(ELCOM)	7402
IC-83(ELCOM)	7403
IC-84(ELCOM)	7404
IC-85(ELCOM)	7405
IC-86(ELCOM)	7410
IC-87(ELCOM)	7420
IC-88(ELCOM)	7440
IC-89(ELCOM)	7441
IC-90(ELCOM)	7442
IC-91	703
IC-91(ELCOM)	7451
IC-91(PHILCO)	703
IC-92(ELCOM)	7453
IC-93(ELCOM)	7454
IC-94(ELCOM)	7472
IC-95(ELCOM)	7473
IC-96(ELCOM)	7475
IC-97(ELCOM)	7474
IC-98(ELCOM)	7490
IC-99(ELCOM)	7476
IC-100(ELCOM)	7492
IC-101(ELCOM)	7447
IC-101-004	1098
IC-102(ELCOM)	7408
IC-103(ELCOM)	7413
IC-104(ELCOM)	7406
IC-105(ELCOM)	7416
IC-106(ELCOM)	74121
IC-107(ELCOM)	910D
IC-109(ELCOM)	941D
IC-112	1080
IC-132	1079
IC-132(SHARP)	1079
IC-142	1050
IC-146	1004
IC-201(ELCOM)	722
IC-202(ELCOM)	747
IC-203(ELCOM)	749
IC-204(ELCOM)	750
IC-205(ELCOM)	708
IC-210(ELCOM)	909
IC-211(ELCOM)	903
IC-212(ELCOM)	911
IC-222(ELCOM)	9666
IC-234(ELCOM)	9099
IC-237(ELCOM)	9807
IC-276(ELCOM)	9944
IC-279(ELCOM)	9948
IC-280(ELCOM)	9932
IC-281(ELCOM)	9933
IC-285(ELCOM)	754
IC-294(ELCOM)	746
IC-295(ELCOM)	941M
IC-297(ELCOM)	738
IC-304(ELCOM)	912
IC-305(ELCOM)	727
IC-306(ELCOM)	914
IC-307(ELCOM)	780
IC-322(ELCOM)	731
IC-323(ELCOM)	787
IC-324(ELCOM)	788
IC-325(ELCOM)	791
IC-403(ELCOM)	1053
IC-405(ELCOM)	721
IC-410(ELCOM)	9668
IC-412(ELCOM)	9670
IC-414(ELCOM)	9664
IC-415(ELCOM)	9682
IC-419(ELCOM)	9157
IC-420(ELCOM)	9158
IC-441(ELCOM)	9669
IC-455(ELCOM)	9093
IC-457(ELCOM)	783
IC-500(ELCOM)	7482
IC-502	705A
IC-505(ELCOM)	1061
IC-508(ELCOM)	1075A
IC-509(ELCOM)	1083
IC-512(ELCOM)	1039
IC-517(ELCOM)	1042
IC-520(ELCOM)	955M
IC-521(ELCOM)	799
IC-524(ELCOM)	740A
IC-531(ELCOM)	923D
IC-533(ELCOM)	1046
IC-535(ELCOM)	1123
IC-540(ELCOM)	1137
IC-542(ELCOM)	1003
IC-543(ELCOM)	1006
IC-546(ELCOM)	712
IC-547(ELCOM)	1013
IC-549(ELCOM)	1012
IC-550(ELCOM)	1152
IC-552(ELCOM)	1056
IC-553(ELCOM)	1073
IC-554(ELCOM)	1054
IC-602(ELCOM)	804
IC-604(ELCOM)	736
IC-605(ELCOM)	740A
IC-606(ELCOM)	743
IC-607(ELCOM)	744
IC-7400	7400
IC-7402	7402
IC-7403	7403
IC-7404	7404
IC-7408	7408
IC-7410	7410
IC-7417	7417
IC-7430	7430
IC-7438	7438
IC-7474	7474
IC-7476	7476
IC-7492	7492
IC-74123	74123
IC-74151	74151
IC-74165	74165
IC-74174	74174
IC-74175	74175
IC-HA1108	1061
IC-UA703E	703
ICF-1	703
ICF-1-6826	703
ICL7106	2051
ICL7106CPL	2051
ICL7107	2050
ICL7107CPL	2050
ICL8007C	940
ICL8007CTY	940
ICL8038	864
ICL8038AC	864
ICL8038BC	864
ICL-741C-TY	941
ICL-8741-PA	909
ICL-8741C-PA	941M
ICM7555	955MC
ICM7555IPA	955M
ICM7556	978
ICM7556IPD	978
ICN224WBT	436W22
ICN406WBT	436W40
ICN-143-WB-T	436W14
ICN-163-WB-T	436W16
ICP-F10	15005E
ICP-F15	15006E
ICP-F20	15007E
ICP-F25	15008E
ICP-F38	15009E
ICP-N5	15019E
ICP-N10	15020E
ICP-N15	15021E
ICP-N20	15022E
ICP-N25	15023E
ICPF15	15006E
ICPF20	15007E
ICPF38	15009E
ICPL2630	3094
ICPN5	15019E
ICPN15	15021E
ICPN20	15022E
ICPN25	15023E
ICS	504
ICTE-5	4900
ID009000	152
ID088000	152
ID020030	162
ID021200	130
ID01140	181
ID042400	284
ID042500	280
ID043800	382
ID084500	33
ID065500	87
ID02560	236
ID015600	124
ID066700	382
ID066800	373
ID066900	373
ID078800	293
ID009220	175
ID023410	152
ID023510	152
ID025910	291
ID038120	291
ID052520	331
ID052610	152
ID052630	152
ID20-0308	7405
ID38120	291
ID52500	331
IDAZ472	5007A
IDAZ472A	5007A
IDAZ3397	5007A
IDAZ3397A	5007A
IDAZ3397B	5007A
IDAZ3398	5009A
IDAZ3398A	5009A
IDAZ3398B	5009A
IDAZ3399	5010A
IDAZ3399A	5010A
IDUPC7912H	967
IE000010	132
IE000020	132
IE1225	142A
IE460B	123AP
IE703E	703
IE850	123AP
IE100820	312
IE101200	459
IE101230	459
IE102400	459
IE900210	312
IE980010	132
IE-850	103A
IF65	102
IF-65	102A
IFSI-3122P	1936
IG-100	105
IGL78M05	960
IGLA6324	987
IGLA6458DF	778A
IGLB1290	2021
IGLB1649	1774
IGLC4011	4011B
IGLC4011B	4011B
IGLC4013B	4013B
IGLC4069UB	4069
IGLC4081B	4081B
IGLM1649	15006
IGSTK5431SL	1733
IGSTK6962	1748
IHHA11714	1600
IHHA11715	1554
IJJ-NJM4558D	778A
IJJ-NJM4558DX	778A
IJNJM4558DM	778A
IL1	3041
IL5	3042
IL12	3042
IL74	3084
IL201	3041
IL202	3041
IL209	3007
IL211	3010
IL214	3009
IL216	3008
IL-1	3040
IL-5	3042
IL-12	3042
IL-74	3084
IL-201	3041
IL-202	3041
IL-211	3010
IL-214	3009
IL-216	3008
ILD1020	1012
ILMC14013B	4013B
ILMC14081B	4081B
IM4004	116
IMAN262	1263
IN34A	109
IN34A-T	109
IN60-1	109
IN60-FM	109
IN914	177
IN914F	177
IN962B	5074A
IN3899	6006
IN4002TA	116
IN4004TA	116
IN4051	6356
IN4066BP	4066B
IN4148	519
IN5062	125
IN5228B	5007A
IN5231B	5010A
IN5391	5800
INC61684	507
INJ33348	113A
INJ33349	109
INJ60034	109
INJ60284	109
INJ61224	109
INJ61225	137A
INJ61227	116
INJ61433	177
INJ61434	116
INJ61675	109
INJ61677	177
INJ61725	177
INJ61726	116
INJ70972	113A
INJ70973	109
INJ70980	109
INMP14027BC	4027B
INMPC1363C	1409
INMPC1363CA	1409
INMPC1513HA	15005
INMPD4011BC	4011B
INMPD4013BC	4013B
INMPD4066BC	4066B
INMPD4081C	4081B
INMPD4093BC	4093B
INMPD14027BC	4027B
INS8080A	8080A
INS8080AN	8080A
INS8214	8214
INTRON-108	128
INTRON-127	175
INUPC1373H	15004
INUPD4011BC	4011B
INUPD4013BC	4013B
INUPD4066BC	4066B
INUPD4081C	4081B
INUPD4093BC	4093B
IO3SP44450	1707
IO2190574J	615P
IP20-0001	123AP
IP20-0002	123AP
IP20-0003	123AP
IP20-0004	195A
IP20-0004(DRIVER)	195A
IP20-0005	237
IP20-0006	123AP
IP20-0007	152
IP20-0008	103A
IP20-0009	159
IP20-0010	133
IP20-0020	109
IP20-0040	229
IP20-0060	109
IP20-006	229
IP20-0011	132
IP20-0012	132
IP20-0014	1102
IP20-0015	109
IP20-0016	109
IP20-0017	614
IP20-0018	145A
IP20-0019	139A

PART NUMBER	NTE REPLACEMENT
IP20-0021	177
IP20-0022	116
IP20-0023	177
IP20-0024	116
IP20-0025	116
IP20-0026	125
IP20-0027	138A
IP20-0029	319P
IP20-0032	131
IP20-0034	199
IP20-0035	312
IP20-0036	152
IP20-0037	161
IP20-0038	161
IP20-0039	123AP
IP20-0041	123AP
IP20-0046	106
IP20-0048	195A
IP20-0054	116
IP20-0061	177
IP20-0076	103A
IP20-0078	312
IP20-0083	152
IP20-0086	135A
IP20-0103	295
IP20-0110	229
IP20-0120	116
IP20-0160	103A
IP20-0203	137A
IP20-0204	614
IP20-0205	7400
IP20-0206	7474
IP20-0207	7493A
IP20-0208	74H22
IP20-0209	74161
IP20-0210	4044B
IP20-0230	293
IP20-0310	7401
IP20-0122	123AP
IP20-0123	299
IP20-0131	299
IP20-0132	295
IP20-0135	235
IP20-0145	177
IP20-0151	614
IP20-0154	236
IP20-0155	235
IP20-0157	222
IP20-0159	194
IP20-0161	1155
IP20-0164	156
IP20-0165	123AP
IP20-0166	614
IP20-0167	116
IP20-0172	300
IP20-0174	703
IP20-0179	109
IP20-0184	177
IP20-0185	610
IP20-0186	5071A
IP20-0191	289
IP20-0192	290
IP20-0211	193
IP20-0212	175
IP20-0213	194
IP20-0214	123AP
IP20-0216	177
IP20-0217	129
IP20-0218	222
IP20-0231	289
IP20-0233	140A
IP20-0244	601
IP20-0253	988
IP20-0281	1240
IP20-0282	177
IP20-0283	109
IP20-0315	7493A
IP20-0316	7474
IP20-0323	152
IP20-0331	235
IP20-0429	1192
IP100	5400
IP101	5401
IP102	5402
IP103	5403
IP104	5404
IP293	1749
IP3524	1720
IP3525	1721
IP3525A	1721
IP3526	1722
IP3526A	1722
IP8255A-5	8255
IP34060	1733
IR1D	116
IR1F	506
IR2A	116
IR2E	116
IR3D	506
IR5GZ61	580
IR5JA	109
IR10	5454
IR10D3L	506
IR10E6J	116
IR10E6X	519
IR20	116
IR30	5456
IR106A1	5454
IR106A1-C	5454
IR106A2	5454
IR106A3	5454
IR106A4	5454
IR106A41	5454
IR106B1	5455
IR106B1-C	5455
IR106B2	5455
IR106B3	5455
IR106B4	5455
IR106B41	5455
IR106C1	5456
IR106C1-C	5456
IR106C2	5456
IR106C3	5456
IR106C4	5456
IR106C41	5456
IR106D1	5457
IR106D2	5457
IR106D3	5457
IR106D4	5457
IR106D41	5457
IR106F1	5453
IR106F2	5453
IR106F3	5453
IR106F4	5453
IR106F41	5453
IR106Q1	5452
IR106Q2	5452
IR106Q3	5452
IR106Q4	5452
IR106Q41	5452
IR106Y1	5452
IR106Y1-C	5452
IR106Y2	5452
IR122A	5462
IR122A1	5462
IR122A-C	5462
IR122B	5463
IR122B1	5463
IR122B-C	5463
IR122C	5465
IR122C1	5465
IR122C-C	5465
IR122D	5465
IR122D1	5465
IR122D-C	5465
IR122E1	5466
IR122F	5461
IR122F1	5461
IR122F-C	5461
IR122M1	5466
IR682	5521
IR683	5522
IR684	5523
IR685	5524
IR686	5525
IR687	5526
IR688	5527
IR689	5528
IR690	5529
IR692	5531
IR801	389
IR914	177
IR1600	5470
IR1601	5471
IR1602	5472
IR1603	5473
IR1604	5474
IR1771	5481
IR1772	5482
IR1774	5483
IR1776	5484
IR1777	5485
IR1778	5486
IR1843A	5501
IR1844A	5502
IR1846A	5504
IR1848A	5506
IR1849A	5507
IR1850A	5508
IR2160	6400
IR9393	943M
IR(SCR)	5455
IR-28-R/508	910D
IR-RE50	131
IR-TR53	128
IR-TR56	187
IR-TR57	175
IR-TR59	130
IR-TR60	157
IR-TR61	162
IRC5	5452
IRC20	5455
IRC-5	5444
IRD54	6408
IRD54-C	6408
IRD3899R	6007
IRD3900	6006
IRD3900R	6007
IRD3901	6006
IRD3901R	6007
IRD3902	6008
IRD3902R	6009
IRD3903	6008
IRD3903R	6009
IRD3909	6006
IRD3909R	6007
IRD3910	6006
IRD3910R	6007
IRD3911	6006
IRD3911R	6007
IRD3912	6008
IRD3912R	6009
IRD3913	6008
IRD3913R	6009
IRD-54	6408
IRF130	2392
IRF131	2392
IRF132	2392
IRF133	2392
IRF140	2392
IRF141	2392
IRF142	2392
IRF143	2392
IRF150	2392
IRF152	2392
IRF153	2392
IRF320	2386
IRF321	2386
IRF322	2386
IRF323	2386
IRF420	2386
IRF421	2386
IRF422	2386
IRF423	2386
IRF430	2386
IRF431	2386
IRF432	2386
IRF433	2386
IRF510	66
IRF510-2	66
IRF511	66
IRF511-2	66
IRF512	66
IRF512-2	66
IRF513	66
IRF520	2382
IRF521	2382
IRF522	2382
IRF523	2382
IRF530	66
IRF531	66
IRF532	66
IRF533	66
IRF610	67
IRF610-3	67
IRF611	67
IRF611-3	67
IRF612	67
IRF612-3	67
IRF613	67
IRF620	67
IRF621	67
IRF622	67
IRF623	67
IRF631	2388
IRF632	2388
IRF633	2388
IRF640	2388
IRF641	2388
IRF642	2388
IRF643	2388
IRF721	67
IRF722	67
IRF723	67
IRF730	67
IRF731	67
IRF732	67
IRF733	67
IRF822	2380
IRF823	2380
IRF833	2380
IRF840	2385
IRF841	2385
IRF842	2385
IRF843	2385
IRF9532	2383
IRF9533	2383
IRFAE20	2384
IRFAE30	2384
IRFAE40	2384
IRFAE42	2384
IRFAE52	2384
IRIF	506
IRTR01	3079
IRTR04	102
IRTR05	100
IRTR06	160
IRTR07	160
IRTR08	101
IRTR09	103
IRTR10	101
IRTR11	100
IRTR12	160
IRTR14	158
IRTR16	121
IRTR16X2	124
IRTR17	160
IRTR18	160
IRTR19	106
IRTR20	159
IRTR21	293
IRTR22	123AP
IRTR23	124
IRTR24	123AP
IRTR25	195A
IRTR26	130
IRTR27	127
IRTR28	106
IRTR30	106
IRTR31	290
IRTR33	293
IRTR34	127
IRTR35	179
IRTR36	181
IRTR51	199
IRTR52	159
IRTR53	128
IRTR54	294
IRTR55	186
IRTR56	187
IRTR57	196
IRTR57X2	175
IRTR58	218
IRTR59	130
IRTR60	171
IRTR61	130
IRTR61X2	130MP
IRTR62	123AP
IRTR63	123AP
IRTR64	195A
IRTR65	195A
IRTR67	163A
IRTR68	164
IRTR69	172A
IRTR70	161
IRTR71	161
IRTR72	188
IRTR73	189
IRTR74	190
IRTR75	191
IRTR76	152
IRTR77	153
IRTR78	154
IRTR79	171
IRTR80	108
IRTR82	176
IRTR83	108
IRTR84	158
IRTR85	102A
IRTR86	123
IRTR87	128
IRTR88	129
IRTR91	155
IRTR92	196
IRTR93	165
IRTR94	226MP
IRTR94MP	226MP
IRTR95	108
IRTR-50	131
IRTR-51	199
IRTR-52	193
IRTR-53	192
IRTR-54	106
IRTR-55	186
IRTR-56	187
IRTR-57	175
IRTR-59	130
IRTR-60	171
IRTR-61	130
IRTR-62	123AP
IRTR-63	235
IRTR-65	195A
IRTR-70	229
IRTR-71	161
IRTR-74	190
IRTRFE100	133
IS010	5550
IS020	5550
IS01209	601
IS5D04052B	4052B
IS68	5550
IS86	614
IS110	5552
IS120	5552
IS210	5552
IS220	5552
IS310	5554
IS320	5554
IS410	5554
IS420	5554
IS510	5556
IS520	5556
IS610	5556
IS620	5556
IS1187FA1*	116
IS1554CTVD	177
IS1887FA1	116
IS6780	3079
IS-446D	178MP
ISBF1	102A
ISD162	103
ISD3510	3063
ISD6760	3078
ISD-162	103
ISL3400	3021
ISPT030A	56022
ISPT030AB	56022
ISPT030B	56022
ISPT030C	56022
ISPT040	56022
ISPT040A	56022
ISPT040AB	56022
ISPT040B	56022
ISPT040C	56022
ISPT130	56022
ISPT130A	56022
ISPT130AB	56022
ISPT130B	56022
ISPT130C	56022
ISPT140	56022
ISPT140A	56022
ISPT140AB	56022
ISPT140B	56022
ISPT140C	56022
ISPT230	56022
ISPT230A	56022
ISPT230AB	56022
ISPT230B	56022
ISPT230C	56022
ISPT240	56022
ISPT240A	56022
ISPT240AB	56022
ISPT240B	56022
ISPT240C	56022
ISPT330	56024
ISPT330A	56024
ISPT330AB	56024
ISPT330B	56024
ISPT330C	56024
ISPT340	56024
ISPT340A	56024
ISPT340AB	56024
ISPT340B	56024
ISPT430	56024
ISPT430A	56022
ISPT430AB	56024
ISPT430B	56024
ISPT430C	56024
ISPT440	56024
ISPT440AB	56024
ISPT440B	56024
ISPT440C	56024
ISPT530	56026
ISPT530A	56026
ISPT530AB	56026
ISPT530B	56026
ISPT530C	56026
ISPT540	56026
ISPT540A	56026
ISPT540AB	56026
ISPT540B	56026
ISPT540C	56026
ISPT630	56026
ISPT630A	56026
ISPT630AB	56026
ISPT630B	56026
ISPT630C	56026
ISPT640	56026
ISPT640A	56026
ISPT640AB	56026
ISPT640B	56026
ISPT640C	56026
ISS53	519
ISSBM211403	2114
ISSRM211403	2114
IT015	56004
IT4B42	5332
IT10D4K	116
IT22	109
IT22AM	109
IT23	109
IT23G	109
IT28	56004
IT28SG	5638
IT28TG	5638
IT48SG	5638
IT48TG	5638
IT108	312
IT115	56004
IT120	123AP
IT121	123AP
IT122	199
IT205A	160
IT215	56004
IT315	56006
IT415	56006
IT515	56008
IT615	56008
IT918	161
IT918A	199
IT929	161
IT930	161
IT2218	123AP
IT2219	123AP
IT2221	123AP
IT2222	123AP
IT2483	194
IT2604	194
IT2605	194
IT2904	194
IT2905	194
IT2906	194
IT2907	194
IT4640	3071
ITC918A	199
ITC3510	3054
ITC3520	3063
ITC3540	3059
ITC3610	3053
ITC3620	3062
ITC3640	3058
ITC3710	3052
ITC3720	3061
ITC3730	3065
ITC3740	3056
ITC3810	3055
ITC3820	3064
ITC3840	3060
ITC4610	3070
ITC4710	3068
ITC4740	3069
ITC6710	3074
ITC6730	3076
ITC6740	3075
ITC6750	3077
ITC6760	3078
ITC6780	3079
ITC-3540	3059
ITE4416	312
ITR-76	152
ITT73	117
ITT73N	519
ITT74H00N	74H00
ITT74H01N	74H01
ITT74H04N	74H04
ITT74H05N	74H05
ITT74H10N	74H10
ITT74H11N	74H11
ITT74H20N	74H20
ITT74H21N	74H21
ITT74H30N	74H30
ITT74H40N	74H40
ITT74H50N	74H50
ITT74H51N	74H51
ITT74H53N	74H53
ITT74H54N	74H54
ITT74H60N	74H60
ITT74H72N	74H72
ITT74H73N	74H73
ITT74H74N	74H74
ITT74H76N	74H76
ITT102	109
ITT142	177
ITT200	519
ITT210	614
ITT301	109
ITT310	614
ITT310G	614
ITT310Y	614
ITT350	116
ITT402	116
ITT410	614
ITT410ST	614
ITT413	177
ITT417	142A
ITT491	75491B
ITT491N	75491B
ITT492	75492B
ITT492N	75492B
ITT493	75493
ITT493N	75493
ITT494	75494
ITT494N	75494
ITT552	2011
ITT554	2012
ITT556	2013
ITT558	2014
ITT600	519
ITT654	2012
ITT656	2013
ITT658	2014
ITT662	2011
ITT709(DIP)	909D
ITT709(METAL CAN)	909
ITT709-5(DIP)	909D
ITT709-5(METAL CAN)	909
ITT710(DIP)	910D
ITT710(METAL CAN)	910
ITT710-5(DIP)	910D
ITT710-5(METAL CAN)	910
ITT711(METAL CAN)	911
ITT711-5(METAL CAN)	911
ITT718	109
ITT723(DIP)	923D
ITT723(METAL CAN)	923
ITT723-5(DIP)	923D
ITT723-5(METAL CAN)	923
ITT741(DIP)	941D
ITT741(METAL CAN)	941
ITT741-5(DIP)	941D
ITT741-5(METAL CAN)	941
ITT895	123AP
ITT921	177
ITT930-5	9930
ITT930N	9930
ITT932-5	9932
ITT932N	9932
ITT933-5	9933
ITT933N	9933
ITT935-5	9935
ITT935N	9935
ITT936-5	9936
ITT936N	9936
ITT937-5	9937
ITT937N	9937
ITT944-5	9944
ITT944N	9944
ITT945-5	9945
ITT945N	9945
ITT946-5	9946
ITT946N	9946
ITT948-5	9948
ITT948N	9948
ITT949-5	9949
ITT949N	9949
ITT951-5	9951
ITT951N	9951
ITT961-5	9961
ITT961N	9961
ITT962-5	9962
ITT962N	9962
ITT963-5	9963
ITT963N	9963
ITT973	159
ITT975	123AP
ITT992	116
ITT1330	747
ITT1352	749
ITT1800-5	9800
ITT1800N	9800
ITT1801N	9801
ITT1806-5	9806
ITT1806N	9806
ITT1807-5	9806
ITT1807N	9807
ITT1808-5	9808
ITT1808N	9808
ITT1809-5	9809
ITT1809N	9809
ITT1810-5	9810
ITT1810N	9810
ITT1811-5	9811
ITT1811N	9811
ITT3064	783
ITT3065	712
ITT7215	177
ITT7400N	7400
ITT7401N	7401
ITT7402N	7402
ITT7403N	7403
ITT7404N	7404
ITT7405N	7405
ITT7406N	7406
ITT7407N	7407
ITT7408N	7408
ITT7409N	7409
ITT7410N	7410
ITT7411N	7411
ITT7412N	7412
ITT7413N	7413
ITT7416N	7416
ITT7417N	7417
ITT7420N	7420
ITT7421N	7421
ITT7425N	7425
ITT7426N	7426
ITT7428N	7428
ITT7430N	7430
ITT7432N	7432
ITT7433N	7433
ITT7437N	7437
ITT7438N	7438
ITT7440N	7440
ITT7442N	7442
ITT7443N	7443
ITT7444N	7444
ITT7445N	7445
ITT7446AN	7446
ITT7447AN	7447
ITT7448N	7448
ITT7450N	7450
ITT7451N	7451
ITT7453N	7453
ITT7454N	7454
ITT7460N	7460
ITT7470N	7470
ITT7472N	7472
ITT7473N	7473
ITT7475N	7475
ITT7476N	7476
ITT7480N	7480
ITT7482N	7482
ITT7483N	7483
ITT7486N	7486
ITT7490N	7490
ITT7491AN	7491
ITT7492N	7492
ITT7493N	7493A
ITT7494N	7494
ITT7495AN	7495
ITT7496N	7496
ITT9093-5	9093
ITT9093N	9093
ITT9094-5	9094
ITT9094N	9094
ITT9097-5	9097
ITT9097N	9097
ITT9099-5	9099
ITT9099N	9099
ITT74107N	74107
ITT74109N	74109
ITT74121N	74121
ITT74122N	74122
ITT74123N	74123
ITT74141N	74141
ITT74145N	74145
ITT74150N	74150
ITT74151N	74151
ITT74152N	74152
ITT74153N	74153
ITT74154N	74154
ITT74155N	74155
ITT74156N	74156
ITT74160N	74160
ITT74161N	74161
ITT74162N	74162
ITT74163N	74163
ITT74164N	74164
ITT74165N	74165
ITT74174N	74174
ITT74175N	74175
ITT74180N	74180
ITT74181N	74181
ITT74182N	74182
ITT74190N	74190
ITT74192N	74192
ITT74193N	74193
ITT74195N	74195
ITT75450N	75450B
ITT75451N	75451B
ITT75452N	75452B
ITT75453N	75453B
ITT75454N	75454B
ITT330419	177
ITT412142	177
ITT-2SK30A-0	459
ITT-310	614
ITT-310S	614
ITT-401	614
ITT-410	612
ITTC4027B	4027B
ITTC4030BP	4030B
ITTC4049BP	4049
ITTC4052BP	4052B
ITTC5012BP	4503B
IUU-LM1011N	2003
IV55	3004
IV5053	3020

PART NUMBER	NTE REPLACEMENT
IV5054-2	3025
IV5153	3023
IV5253	3024
IV5353	3021
IV5374	3011
IV5753	3022
IV-55	3004
IV-5253	3024
IV-5374	3011
IVN6000CNV	2380
IW01-08J	5072A
IW01-09J	5074A
IX0037CE	615P
IX0043CE	712
IX0054CE	1140
IX0069CE	4001B
IX0087TA	1515
IX0092CE	1545
IX0093CE	1532
IX0094CE	1496
IX0260CE	1658
IX0137CE	1751
IX0212CE	1671
IX0213CE	1616
IX0214CE	1576
IX0238CE	1676
IX0252CE	1413
IX0252CEZZ	1413
IX0275CE	1572
IX0275CE(MOD25KT15)	1572
IX0276CE	1570
IX0416CE	1792
IX0487CE	1794
IX0488CE	1217
IX0499CE	1795
IX0638CE	960
IX0948CE	1782
IX0984CE	1782
IX8055-379005N	519
IX552940	293
IX552950	278
IX600150	382
IX600610	152
IX600680	290A
IX601370	290A
IX800790	2308
IX800800	373
IX800900	379
IX801200	85
IX801270	37
IX801290	36
IXTM6N60	2386
IXTM6N60A	2386
IXTM6N70	2384
IXTM6N70A	2384
IXTM6N80	2384
IXTM6N80A	2384
IYBA5102AALC	1558
IYY-BA301	1135
J005	5322
J05	156
J1	156
J2	156
J2-4570	116
J4	156
J4-1000	7400
J4-1002	7402
J4-1004	7404
J4-1010	7410
J4-1047	7447
J4-1075	7475
J4-1076	7476
J4-1090	7490
J4-1092	7492
J4-1121	74121
J4-1203	740A
J4-1215	941M
J4-1555	955M
J4A3	6354
J4B3	6354
J4C3	6354
J4D3	6354
J4E3	6354
J4F3	6354
J4G3	6354
J4H3	6356
J4K3	6356
J4M3	6358
J4N3	6358
J5A3	6354
J5A3R	6355
J5B3	6354
J5B3R	6355
J5C3	6354
J5C3R	6355
J5D3	6354
J5D3R	6355
J5E3	6354
J5E3R	6355
J5F3	6354
J5G3	6354
J5G3R	6355
J5H3	6356
J5H3R	6357
J5K3	6356
J5K3R	6357
J5M3	6358
J5M3R	6359
J5N3	6358
J5N3R	6359
J5P3	6358
J5P3R	6359
J5R3	6362
J5R3R	6363
J6	156
J6A3	6354
J6A3R	6355
J6B3	6354
J6B3R	6355
J6C3	6354
J6C3R	6355
J6D3	6354
J6D3R	6355
J6E3	6354
J6E3R	6355
J6F3	6354
J6F3R	6355
J6G3	6354
J6G3R	6355
J6H3	6356
J6H3R	6357
J6K3	6356
J6K3R	6357
J6M3	6358
J6M3R	6359
J6N3	6358
J6N3R	6359
J6P3	6358
J6P3R	6359
J6R3	6362
J6R3R	6363
J8	156
J10	156
J39B	614
J39C	614
J100	116
J107	107
J108	451
J139A	123AP
J187	108
J241	110MP
J242	109
J243	109
J305-001017	383
J305-001018	290A
J305-001022	290A
J305-001023	290A
J305-001025	187A
J305-001049	290A
J305-01009	180
J305-04018	152
J305-01063	290A
J305-03112	85
J308	312
J685	109
J961B(GE)	123AP
J1000-7400	7400
J1000-7402	7402
J1000-7404	7404
J1000-7410	7410
J1000-7447	7447
J1000-7476	7476
J1000-7490	7490
J1000-7492	7492
J1000-74121	74121
J1000-NE555	955M
J2441	109
J5062	160
J5063	102A
J5064	102A
J9680	159
J9697	159
J20437	116
J20438	142A
J24127	116
J24186	136A
J24262	5070A
J24366	131MP
J24458	123AP
J24561	107
J24562	107
J24563	107
J24564	123AP
J24565	123AP
J24566	124
J24567	110MP
J24569	614
J24570	116
J24596	108
J24620	160
J24621	160
J24622	160
J24623	160
J24624	123AP
J24625	123AP
J24626	102A
J24628	110MP
J24630	116
J24631	137A
J24632	139A
J24635	108
J24636	108
J24637	108
J24639	102A
J24640	159
J24641	123AP
J24642	175
J24643	109
J24645	116
J24647	116
J24658	123AP
J24701	107
J24752	123AP
J24753	123AP
J24754(NPN)	184
J24754(PNP)	185
J24755	177
J24756	116
J24812	199
J24813	108
J24814	108
J24817	123AP
J24820	110MP
J24832	106
J24833	100
J24834	102
J24838	109
J24840	614
J24842	123AP
J24843	123AP
J24844	229
J24845	123AP
J24846	123AP
J24852	108
J24855	123AP
J24858	614
J24863	108
J24868	103A
J24869	102A
J24870	102A
J24871	116
J24872	140A
J24874	123AP
J24875	199
J24877	116
J24878	123AP
J24903	107
J24904	108
J24905	108
J24906	123AP
J24907	123AP
J24908	129
J24909	123AP
J24910	614
J24911	109
J24912	177
J24913	109
J24914	109
J24915	108
J24916	123AP
J24919	117
J24920	116
J24921	108
J24923	108
J24932	199
J24933	108
J24934	102A
J24935	116
J24939	116
J24940	116
J24950	614
J101183	116
J241015	129
J241015(2SA695C)	193
J241015(2SC1209C)	192
J241054	123AP
J241099	123AP
J241100	116
J241102	116
J241105	614
J241111(2SB370)	158
J241111(2SD170)	103A
J241142	116
J241164	102A
J241177	107
J241178	158
J241179	137A
J241181	614
J241182	177
J241183	506
J241184	614
J241185	103A
J241186	136A
J241188	107
J241189	107
J241190	102A
J241209	116
J241210	116
J241211	116
J241212	117
J241213	177
J241214	116
J241215	506
J241216	5082A
J241217	141A
J241218	138A
J241219	749
J241220	1050
J241221	1089
J241222	712
J241224	218
J241225	159
J241226	159
J241227	238
J241228	124
J241229	124
J241230	123AP
J241231	175
J241232	116
J241233	198
J241234	177
J241235	177
J241236	231
J241239	614
J241241	152
J241242	177
J241245	109
J241250	184
J241251	123AP
J241252	196
J241253	159
J241255	128
J241256	128
J241258	218
J241259	159
J241260	116
J241271	116
J310159	102A
J310224	102A
J310249	123AP
J310250	123AP
J310251	160
J310252	102A
J320020	116
J320041	109
J-05	116
J-1	116
J-2	116
J-4	116
J-6	116
J-8	125
J-10	125
JA101	290A
JA101P	290A
JA101Q	290A
JA1050	159
JA1050G	159
JA1050GL	159
JA1200	123AP
JA1350	199
JA1350B	199
JA1350W	199
JA2101	289A
JA-H	123AP
JA-KCDP	156
JA-L	123AP
JAM702C	116
JB00036	166
JB16C4	116
JB8255AP-5	8255
JB-00030	116
JB-00036	117
JB-BB1A	116
JC100	105
JC105-0	85
JC105D	85
JC501	85
JC501-0	85
JC501P	85
JC501Q	85
JC501R	85
JC-00050	116
JC-00012	116
JC-00014	116
JC-00017	506
JC-00025	116
JC-00028	116
JC-00032	116
JC-00033	116
JC-00035	116
JC-00037	116
JC-00044	116
JC-00045	116
JC-00047	116
JC-00049	116
JC-00051	116
JC-00055	116
JC-00059	116
JC-0025	117
JC-10D1	116
JC-DS16E	116
JC-KS05	116
JC-SD-1X	116
JC-SD-1Z	116
JC-SD1Z	116
JC-SG005	116
JC-V03C	116
JCN1	116
JCN2	116
JCN3	116
JCN4	116
JCN5	116
JCN6	116
JCN7	125
JCV2	116
JCV3	116
JCV7	125
JCV-2	116
JCV-3	116
JD-00040	116
JD-BB1A	116
JD-SD1D	116
JD-SD1Z	116
JDSD1D	116
JE210	197
JE1033B	132
JE2492	198
JE5400	288
JE5400B	288
JE5400C	288
JE5401	288
JE5401B	288
JE5401C	288
JE5550	194
JE5550A	194
JE5550B	194
JE5551	194
JE5551A	194
JE5551B	194
JE8050	128P
JE8050C	128P
JE8050D	128P
JE8550	129P
JE8550B	129P
JE8550BC	294
JE8550C	129P
JE9011	229
JE9011D	233
JE9011E	233
JE9011F	233
JE9011G	123AP
JE9011H	123AP
JE9011I	123AP
JE9012	159
JE9012D	159
JE9012E	159
JE9012F	159
JE9012G	159
JE9012H	159
JE9013	123AP
JE9013D	123AP
JE9013E	123AP
JE9013F	123AP
JE9013G	123AP
JE9014	123AP
JE9014A	123AP
JE9014B	123AP
JE9014C	123AP
JE9014D	47
JE9015	159
JE9015A	159
JE9015B	159
JE9015C	159
JE9016	108
JE9016D	108
JE9016E	108
JE9016F	108
JE9016G	108
JE9016H	108
JE9016I	108
JE9018	108
JE9018D	108
JE9018E	108
JE9018F	108
JE9018G	108
JE9018H	108
JE9018I	108
JE9042	287
JE9042B	287
JE9042C	287
JE9043	287
JE9043B	287
JE9043C	287
JE9092	288
JE9092A	288
JE9092B	288
JE9093	288
JE9093A	288
JE9093B	288
JE9112	129P
JE9112B	159
JE9112C	129P
JE9112D	129P
JE9113	128P
JE9113A	128P
JE9113B	128P
JE9214A	2355
JE9214B	2357
JE9214C	2359
JE9215A	2356
JE9215B	2358
JE9215C	2360
JE-9018G	108
JEM1	105
JEM2	105
JEM3	105
JEM4	105
JEM5	105
JF1033	312
JF1033B	312
JF1033G	312
JF1033S	132
JF-1033	132
JJ80	118
JJ650	118
JJ1300	503
JL40A	177
JL-40A	177
JLM-20	123AP
JM40	177
JM401	177
JM-40	177
JN271	123AP
JNJ61673	133
JP40	104
JP5062	160
JP5063	102A
JP5064	102A
JP575005	110MP
JP575995	110MP
JR05	126
JR5	102A
JR10	160
JR15	102A
JR30	160
JR30X	160
JR40	104
JR100	160
JR200	160
JSP6009	242
JSP7001	229
JSP7001B	123AP
JSP7005	108
JSP7006	108
JT-1601-40	123AP
JT-1601-41	112
JT-E1014	109
JT-E1024D	116
JT-E1031	109
JT-E1064	116
JT-E1095	118
K0120SA	177
K04774	104
K071687	106
K071818-001	129
K071961-001	128
K071962-001	129
K071964-001	130
K1.3G22-1A	166
K1.3G22A	116
K1A5	116
K1B5	116
K1C5	116
K1D5	116
K1E5	116
K1F5	116
K1G5	116
K1H5	116
K1K5	125
K1M5	125
K1V5	6415
K1V6	6416
K1V10	6417
K1V11	6418
K1V12	6419
K2A5	116
K2B5	116
K2C5	116
K2CDP221B	166
K2D5	116
K2DP12	116
K2E5	116
K2F5	116
K2G	116
K2G5	116
K2H5	125
K2K5	125
K2M5	125
K3	109
K3AST47	112
K3B5	116
K3C5	116
K3D5	116
K3E	112
K3F5	116
K3G5	116
K3H5	125
K3K5	125
K3M5	125
K4-500	158
K4-501	103A
K4-505	159
K4-506	123AP
K4-510	108
K4-520	104
K4-521	104
K4-525	130
K4-550	109
K4-555	116
K4-557	116
K4A5	116
K4B5	116
K4C5	116
K4D5	116
K4E5	116
K4F5	116
K4G5	116
K4H5	125
K4K5	125
K4M5	125
K5A5	116
K5B5	116
K5C5	116
K5D5	116
K5E5	116
K5F5	116
K5G5	116
K5H5	125
K5K5	125
K5M5	125
K6	109
K10	133
K11(1-GATE)	133
K11(1GATE)	132
K11-0(1-GATE)	133
K11-0(1 GATE)	132
K11-R(1 GATE)	132
K11-R(1-GATE)	133
K11-Y(1 GATE)	132
K11-Y(1-GATE)	133
K12(1 GATE)	132
K12(1-GATE)	133
K12-3(1-GATE)	133
K12-GR(1 GATE)	132
K12-GR(1-GATE)	133
K12-0(1 GATE)	132
K12-R(1 GATE)	132
K12-R(1-GATE)	133
K13(1 GATE)	132
K13(1-GATE)	133
K14-0066-1	158
K14-0066-4	100
K14-0066-6	229
K14-0066-12	123AP
K14-0066-13	128
K15-0(1-GATE)	133
K15-GR(1 GATE)	132
K15-GR-(1-GATE)	133
K15-0(1 GATE)	132
K15-R(1 GATE)	132
K15-R(1-GATE)	133
K15-Y(1 GATE)	132
K15-Y(1-GATE)	133
K16	311
K16H	311
K16HB	311
K16HC	311
K17	133
K17(1 GATE)	132
K17(1-GATE)	133
K17A(1 GATE)	132
K17A(1-GATE)	133
K17B(1 GATE)	132
K17B(1-GATE)	133
K17BL(1 GATE)	132
K17BL(1-GATE)	133
K17GR(1 GATE)	132
K17GR(1-GATE)	133
K17R(1 GATE)	132
K17R(1-GATE)	133
K17Y(1 GATE)	132
K17Y(1-GATE)	133
K19	133
K19(1 GATE)	132
K19(1-GATE)	133
K19(GR)	133
K19BL(1 GATE)	132
K19BL(1-GATE)	133
K19GC	133
K19GC(1 GATE)	132
K19GC(1-GATE)	133
K19GE(1 GATE)	132
K19GE(1-GATE)	133
K19GR	133
K19GR(1 GATE)	132
K19GR(1-GATE)	133
K19TM-GR	453
K19Y	133
K19Y(1 GATE)	132
K19Y(1-GATE)	133
K22(1 GATE)	132
K22(1-GATE)	133
K22-Y(1 GATE)	132
K22-Y(1-GATE)	133
K22Y(1 GATE)	132
K22Y(1-GATE)	133
K23(1 GATE)	132
K23(1-GATE)	133
K23A	133
K23AL(SGD)	312
K24(1 GATE)	133
K24C(1 GATE)	133
K24D(1 GATE)	133
K24DR(1 GATE)	133
K24E(1 GATE)	133
K24F(1 GATE)	133
K24G(1 GATE)	133
K25(1 GATE)	132
K25(1-GATE)	133
K25C(1 GATE)	132
K25C(1-GATE)	133
K25D(1 GATE)	132
K25D(1-GATE)	133
K25E(1 GATE)	132
K25E(1-GATE)	133
K25ET(1 GATE)	132
K25ET(1-GATE)	133
K25F(1 GATE)	132
K25F(1-GATE)	133
K25G(1 GATE)	132
K25G(1-GATE)	133
K30-0(1 GATE)	132
K30-0(1-GATE)	133
K30-0(1 GATE)	133
K30A(1 GATE)	132
K30A(1-GATE)	133
K30AD(1 GATE)	132
K30AD(1-GATE)	133
K30AG(SGD)	459
K30AGR	459
K30AGR(1 GATE)	132
K30AGR(1-GATE)	133
K30B(1 GATE)	132
K30B(1-GATE)	133
K30B(D,S,G1,G2)	222
K30C(1 GATE)	132
K30C(1-GATE)	133
K30C(D,S,G1,G2)	222
K30D(1 GATE)	132
K30D(1-GATE)	133
K30GR(1 GATE)	132
K30GR(1-GATE)	133
K30R(1 GATE)	132
K30R(1-GATE)	133
K30Y	133
K30Y(1 GATE)	132
K30Y(1-GATE)	133
K31(1 GATE)	132
K31(1-GATE)	133
K31C	133
K31C(1 GATE)	132
K31C(1-GATE)	133
K32A(2 GATE)	221
K32B(2 GATE)	221
K32C(2 GATE)	221
K32D(2 GATE)	221
K33(1 GATE)	132
K33(1-GATE)	133
K33(D,S,G1,G2)	222
K33(E)	133
K33E	133
K33E(1 GATE)	132
K33E(1-GATE)	133
K33F	133
K33F(1 GATE)	132
K33F(1-GATE)	133
K33GR	133
K33GR(1 GATE)	132

PART NUMBER	NTE REPLACEMENT
K33GR(1-GATE)	133
K34	133
K34(1 GATE)	132
K34(1-GATE)	133
K34(E)	133
K34B(1 GATE)	132
K34B(1-GATE)	133
K34C	133
K34C(1 GATE)	132
K34C(1-GATE)	133
K34D	133
K34D(1 GATE)	132
K34D(1-GATE)	133
K34E	133
K34S747(1 GATE)	112
K34S747(1-GATE)	112
K35(1 GATE)	133
K35(SGD)	451
K35-0(1 GATE)	133
K35-1(1 GATE)	133
K35-2(1 GATE)	133
K35-GR(2 GATE)	454
K35-Y(2 GATE)	454
K35A(1 GATE)	133
K35BL(1 GATE)	133
K35C(1 GATE)	133
K35G(1 GATE)	221
K35GN(1 GATE)	133
K35GR(2 GATE)	454
K35R(1 GATE)	133
K35Y(1 GATE)	133
K35Y(2 GATE)	454
K37(1 GATE)	132
K37(1-GATE)	133
K37-0	454
K37-2	454
K37-3	454
K37H(1 GATE)	132
K37H(1-GATE)	133
K37L(1 GATE)	132
K37L(1-GATE)	133
K39Q(2 GATE)	221
K39R(2 GATE)	221
K40(2 GATE)	221
K40A(2 GATE)	221
K40B(2 GATE)	221
K40C	451
K40C(2 GATE)	221
K40D(2 GATE)	221
K40M(2 GATE)	221
K41D(GSD)	451
K41E(GSD)	451
K41F(GSD)	451
K42	133
K42-2	312
K42CM1	312
K44BL(2 GATE)	222
K44R(2 GATE)	222
K45(2 GATE)	222
K45F	456
K45H	456
K47	133
K47(SGD)	457
K47M	133
K47M(1 GATE)	132
K47M(1-GATE)	133
K47M(SGD)	457
K49	133
K49F	133
K49F(1 GATE)	132
K49F(1-GATE)	133
K49H	133
K49H(1 GATE)	132
K49H(1-GATE)	133
K49HK(1 GATE)	132
K49HK(1-GATE)	133
K49I	133
K49I(1 GATE)	132
K49I(1-GATE)	133
K49M(1 GATE)	132
K49M(1-GATE)	133
K49R(2 GATE)	222
K52	109
K55(1 GATE)	312
K55(1-GATE)	312
K55D(1 GATE)	312
K55D(1-GATE)	312
K55E(1 GATE)	312
K55E(1-GATE)	312
K60	109
K61	451
K87	459
K87H	459
K105	459
K105(DGS)	459
K105E	459
K105F	459
K105H(DGS)	459
K105J(DGS)	459
K107-2(SGD)	451
K107-3(SGD)	451
K107-5(SGD)	451
K112	113A
K112C	113A
K115J510-1	113A
K115J510-1,2(WT16X7)	113A
K115J510-2	113A
K115J511-2	109
K117J460-1	113A
K117J460-2	113A
K118I	129
K118J966-2	115
K118J966-3	115
K118J966-4	115
K119(SGD)	312
K119J804-5	177
K120Y(1 GATE)	132
K120Y(1-GATE)	133
K121J688-1	107
K122	113A
K122-J176-1	118
K122-J176-2	118
K122C	113A
K122J176-1	118
K122J176-2	118
K141	466
K141A	466
K161	451
K161GR	451
K161Y	451
K170(1 GATE)	132
K170(1-GATE)	133
K170R(1 GATE)	132
K170R(1-GATE)	133
K182Y(DSG)	312
K192	453
K192(DSG)	312
K192BL	453
K192GR	453
K192GR(DSG)	312
K192Y	453
K198L	133
K200	116
K417-68	126
K492(2 GATE)	222
K882	109
K1181	129
K1615	113A
K1617	115
K2001	107
K2109	108
K2110	108
K2111	108
K2112	108
K2113	108
K2114	108
K2115	108
K2116	108
K2117	108
K2118	108
K2119	107
K2120	107
K2121	107
K2122	107
K2123	107
K2124	107
K2125	107
K2126	107
K2127	107
K2501	107
K2502	107
K2503	107
K2509	107
K2601C	107
K2602C	107
K2603C	107
K2604	107
K2604C	107
K2615	107
K2616	107
K2857C	161
K2857P	161
K3010P	3047
K3020P	3048
K3683C	161
K3683P	161
K3880C	161
K3880P	3880
K4002	107
K9682	159
K24154	1142
K75508-1	160
K1038345-22A	113A
K8532799	116
K8533058-1	116
K8533137	113A
K8534992P1	113A
K8534992P2	113A
K-112C	113A
K-122	113A
K-122C	113A
K-1615	113A
KA1Z25	128
KA33V	615P
KA562Y	290A
KA1222	1170
KA2101	712
KA2102A	1246
KA2120	712
KA2131	1674
KA2153	1547
KA2155	1845
KA2181	1714S
KA2212	1465
KA2220	1466
KA2221	1170
KA2224	1634
KA2243	1557
KA2244	1525
KA2245	1541
KA2261	1248
KA2263	1657
KA2269	15007
KA2270	15023
KA2284	1561
KA2410	1648
KA2410N	1648
KA2411	1649
KA2411N	1649
KA2911	1545
KA2912	1522
KA2914	1572
KA2914A	1572
KA2916	1413
KA2919	1728
KA2921	1496
KA2923	1827
KA2981	1611
KA4559	132
KA7226	1571
KA8301	1716
KA8402	1873
KA22261	1651
KA22441	1604
KB102	177
KB162	601
KB162C5	601
KB162N	177
KB162W	601
KB165	601
KB167	605A
KB169	601
KB262	605A
KB262C	605A
KB265	601
KB265A	177
KB265A(RECT)	116
KB269	601
KB462F	605A
KB8339	123AP
KB8416	123AP
KB-162	177
KB-162C5	177
KB-162C5A	177
KB-165	177
KB-182	116
KB-262	605A
KB-265	177
KB-269	605A
KB-365	601
KBF-02	5309
KBH2502	5322
KBH2504	5324
KBH2506	5326
KBL005	5318
KBL01	5318
KBL02	5309
KBL04	5319
KBL06	5319
KBL08	5320
KBL10	5320
KBP01	166
KBP02	167
KBP04	168
KBP06	169
KBP08	170
KBP10	170
KBP-005	166
KBP-10	170
KBPC10	5317
KBPC10-005	5322
KBPC10-005W	5322W
KBPC10-01	5322
KBPC10-01W	5322W
KBPC10-02	5322
KBPC10-02W	5322W
KBPC10-04	5324
KBPC10-04W	5324W
KBPC10-06	5326
KBPC10-06W	5326W
KBPC10-08	5327
KBPC10-08W	5327W
KBPC10-4	5324
KBPC10-6	5326
KBPC10-10	5328
KBPC10-10W	5328W
KBPC12-005	5322
KBPC12-005W	5322W
KBPC12-01	5322
KBPC12-01W	5322W
KBPC12-02	5322
KBPC12-02W	5322W
KBPC12-04	5324
KBPC12-04W	5324W
KBPC12-06	5326
KBPC12-06W	5326W
KBPC12-08	5327
KBPC12-08W	5327W
KBPC12-10	5328
KBPC12-10W	5328W
KBPC15-005	5322
KBPC15-005W	5322W
KBPC15-01	5322
KBPC15-01W	5322W
KBPC15-02	5322
KBPC15-02W	5322W
KBPC15-04	5324
KBPC15-04W	5324W
KBPC15-06	5326
KBPC15-06W	5326W
KBPC15-08	5327
KBPC15-08W	5327W
KBPC15-10	5328
KBPC15-10W	5328W
KBPC25-005	5322
KBPC25-005W	5322W
KBPC25-01	5322
KBPC25-01W	5322W
KBPC25-02	5322
KBPC25-02W	5322W
KBPC25-04	5324
KBPC25-04W	5324W
KBPC25-06	5326
KBPC25-06W	5326W
KBPC25-08	5327
KBPC25-08W	5327W
KBPC25-10	5328
KBPC25-10W	5328W
KBPC35-005	5340
KBPC35-02	5340
KBPC35-04	5342
KBPC35-06	5342
KBPC35-08	5344
KBPC35-10	5344
KBPC101	5312
KBPC102	5313
KBPC104	5314
KBPC106	5315
KBPC108	5316
KBPC110	5317
KBPC802	5313
KBPC802T	5322
KBPC804	5314
KBPC804T	5324
KBPC806T	5326
KBPC808T	5327
KBPC810T	5328
KBPC1005	5312
KBPC2502	5322
KBPC8005T	5322
KBU4A	5329
KBU4B	5329
KBU4D	5329
KBU4G	5330
KBU4J	5330
KBU4K	5331
KBU4M	5331
KBU6A	5329
KBU6B	5329
KBU6D	5329
KBU6G	5330
KBU6J	5330
KBU6K	5331
KBU6M	5331
KC0.8	116
KC0.8C22/1	166
KC0.8CP	116
KC0.8CP11	116
KC0.8CP11/1&121Y	116
KC0.8CP11/1	116
KC0.8CP11/H12/1	116
KC0.8CP11/1+121Y	116
KC0.8CP12/1	116
KC0-8CP	116
KC0-8CP11/1+12/1	116
KC0-8CP11/1&12/1	116
KC06E11/8	116
KC08C11/8	116
KC08C11/10	116
KC08C21/5	116
KC08C22/19	116
KC08C215	116
KC08C221	116
KC08C1110	116
KC08C2219	166
KC08CP111	116
KC08CP121	116
KC0911/8	116
KC06911	116
KC1.3C	116
KC1.3C3X11/1	116
KC1.3C22/1	116
KC1.3G	116
KC1.3G12/1X2	116
KC1.3G22/12	116
KC1.3G22/1A	116
KC2AP22/1B	166
KC2AP221B	166
KC2BP22/1B	116
KC2D22/1	166
KC2D221	116
KC2DP	116
KC2DP11/1	116
KC2DP11/1412/1	116
KC2DP12/1	116
KC2DP12/1N	116
KC2DP12/2	116
KC2DP22/1	116
KC2DP22/1B	166
KC2DP121N	116
KC2DP122	116
KC2DP221	116
KC2DP221B	116
KC2DP221C	166
KC2G	177
KC2G11/1	116
KC2G11/1+12/1	116
KC2G11/1&12/1	116
KC2G12/1	116
KC13C221	116
KC112A	113A
KC583	1257
KC583C	1257
KC1008-Y	128
KC1322/1	116
KC1815Y	85
KC-08C221	116
KC-0691L/8	116
KC-1.3C3X11/1	116
KCD-80P11/1+12/1	506
KCDP12-1	156
KCO-8CP	116
KCO-8CP11/1 12/1	116
KCO-8CP11/1+12/1	116
KCS1674-0	229
KD27	109
KD300A	177
KD2100	5513
KD2101	102A
KD2102	123AP
KD2103	116
KD2104	116
KD2114	904
KD2115	784
KD2117	784
KD2118	128
KD2119	108
KD2120	129
KD2121	176
KD2122(IC)	912
KD2122(TRANS)	102
KD2124	103
KD2130	222
KD2501	140A
KD2503	137A
KD2504	139A
KD2505	142A
KD5000	108
KD6311	1046
KDC.80P11/1+12/1	506
KDC.80P11/1&12/1	506
KDC-80P11/1912/1	506
KDD401	375
KDS261-Y	192
KDS362	375
KDS415Y	287
KDS471-Y	293
KDS1553	177
KDS1554	177
KDS1555	177
KDS1555-T	177
KE1007-0004-00	129
KE4416	312
KE5105	312
KE-262	116
KE-1007	130
KGE41007	116
KGE41054	128
KGE41055	123
KGE41061	186
KGE41414	293
KGE41959	109
KGE46109	177
KGE46146	199
KGE46338	229
KGE46441	1087
KGE46442	1192
KGE46465	177
KGS1000	102A
KIA7203PC	1154
KIA7205AP	1155
KIA7205CP	1370
KIA7205P	1155
KIA7207AP	1476
KIA7208AP	1476
KIA7217	1370
KIA7217AP	1370
KIA7222AP	1278
KIA7227P	1394
KIA7230P	1387
KIA7270P	1830
KIA7271P	1831
KIA7280P	1898
KIA7281P	1899
KIA7303P	1525
KIA7310P	1192
KIA7312P	1523
KIA7313AP	1465
KIA7325P	1730
KIA7343AP	1657
KIA7358AP	1843
KIA7612AP	1519
KIA7613AP	1624
KIA7614AP	1654
KIA7630	1576
KIA7630P	1576
KIA7640AP	1842
KIA7658P	1571
KIA7668BP	1651
KIA7805P	960
KIA7806P	962
KIA7808P	964
KIA7810P	1932
KIA7812P	966
KIA7815P	968
KIA7818P	958
KIA7824P	972
KIA75324P	987
KIA78005P	960
KIA78006P	962
KIA78008P	964
KIA78010P	1932
KIA78012AP(KEC)	966
KIA78012P	966
KIA78015P	968
KIA78018P	958
KIA78024P	972
KLH704	123AP
KLH1422	123AP
KLH4567	116
KLH4577	116
KLH4745	196
KLH4746	159
KLH4747	272
KLH4763	177
KLH4781	197
KLH4792	107
KLH4793	722
KLH4795	726
KLH5353	197
KLH5807	128
KLH5808	129
KM858C	1198
KM917E	123AP
KM917F	123AP
KM917G	123AP
KM918E	107
KM918F	107
KM7915T	1919
KM41256	4256
KM41256-10	4256
KM41256-15	21256
KM41256AP10	4256
KN2	113A
KN2222	123AP
KN2907	159
KO4774	104
KOS25201-1	109
KOS25201-2	109
KOS25211-2	5071A
KOS25221-1	614
KOS25642-10	160
KOS25642-20	158
KOS25642-40	158
KOS25643-10	158
KOS25643-15	158
KOS25651-20	158
KOS25657-53	158
KOS25661-20	127
KOS25671-20	229
KOS25671-21	229
KOS25671-23	229
KPB02	167
KPB04	168
KPB08	170
KPB10	170
KPG6682	123AP
KR8417	123AP
KR-162	519
KR-Q0001	102A
KR-Q0002	102A
KR-Q0004	102A
KR-Q0005	109
KR-Q1010	102A
KR-Q1011	102A
KR-Q1012	102A
KR-Q1013	123AP
KS030A	5065A
KS05	116
KS033A	5005A
KS033B	5005A
KS036A	134A
KS051A	135A
KS056A	136A
KS056B	136A
KS062A	137A
KS30A	134A
KS30AF	134A
KS30B	134A
KS30BF	134A
KS31A	134A
KS32A	134A
KS32AF	134A
KS32B	134A
KS32BF	134A
KS34A	135A
KS34AF	135A
KS34B	135A
KS34BF	135A
KS35A	135A
KS35AF	135A
KS36A	136A
KS36AF	136A
KS36B	136A
KS36BF	136A
KS37A	137A
KS37AF	137A
KS41A	139A
KS41AF	139A
KS42A	140A
KS42AF	140A
KS42B	140A
KS42BF	140A
KS44A	142A
KS44AF	142A
KS44B	142A
KS44BF	142A
KS46	145A
KS46AF	145A
KS46BF	145A
KS100A	140A
KS100B	140A
KS120A	142A
KS120B	142A
KS150A	145A
KS150B	145A
KS555HN	955MC
KS556	978C
KS556N	978C
KS2033A	134A
KS2033B	5005A
KS2039A	134A
KS2039B	134A
KS2047A	135A
KS2047B	135A
KS2051A	135A
KS2051B	135A
KS2056A	136A
KS2056B	136A
KS2062A	137A
KS2062B	137A
KS2091A	139A
KS2091B	139A
KS2100A	140A
KS2100B	140A
KS2120A	142A
KS2120B	142A
KS2150A	145A
KS2150B	145A
KS5804	1693
KS5805A	1691
KS5805B	1692
KS5808	1690
KS5808N	1690
KS10969-L5	7416
KS20180-L1	128
KS20967-L1	7400
KS20967-L2	7404
KS20967-L3	7486
KS20969-L2	7483
KS20969-L3	7492
KS20969-L4	7495
KS21282-L1	7408
KS21282-L2	7425
KS21282-L3	7432
KS-05	116
KS-05X	116
KS-19938	130
KS-20033L2	219
KS-20971-L1	909D
KS-21177	941M
KSA495Y	159
KSA539	159
KSA539-0	159
KSA539-D	159
KSA539-0	159
KSA539-Y	159
KSA539Y	159
KSA542-0	159
KSA542-0	159
KSA542-Y	159
KSA542Y	159
KSA562	290A
KSA562-0	290A
KSA562TM	159
KSA562TM-0	290A
KSA562TM-0	290A
KSA614	292
KSA614-Y	292
KSA614Y	292
KSA634	187A
KSA634-0	187A
KSA634-0	187A
KSA634-Y	187A
KSA6340	187A
KSA634Y	187A
KSA642	159
KSA642-0	159
KSA642-0	159
KSA642-Y	159
KSA643	193
KSA643-0	193
KSA643-OY	193
KSA643-Y	193
KSA708	159
KSA708-0	129P
KSA708-0	159
KSA708-Y	159
KSA708Y	159
KSA733	159
KSA733-0	159
KSA733-04	290A
KSA733-0	290A
KSA733-Y	159
KSA7330	159
KSA733Y	159
KSA735-0	159
KSA735-0	159
KSA940	398
KSA1008-0	128
KSA1015	290A
KSA1015Y	290A
KSA1175	2362
KSA6340	187A
KSA6420	159
KSA7330	159
KSA7334	290
KSB546	398
KSB546-0	398
KSB546-0	398
KSB546-R	398
KSB546-Y	398
KSB546R	398
KSB564-Y	298
KSB564A-Y	294
KSB564AY	294
KSB564Y	298
KSB-564Y	298
KSC708-0	159
KSC708-Y	159
KSC815	123AP
KSC815-0	123AP
KSC815-0	123AP
KSC815-OY	123AP
KSC815-Y	123AP
KSC815Y	123AP
KSC838	123AP
KSC838-0	123AP
KSC945	123AP
KSC945-0	123AP
KSC945-0	123AP
KSC945-OY	123AP
KSC945-Y	123AP
KSC9450	123AP
KSC945Y	123AP
KSC1008	123AP
KSC1008-0	128P
KSC1008-O	123AP

PART NUMBER	NTE REPLACEMENT
KSC1008-Y	123AP
KSC1008C	123AP
KSC1008Y	123AP
KSC1096	186A
KSC1096-0	186A
KSC1096-0	186A
KSC1096-Y	186A
KSC1096O	186A
KSC1096Y	186A
KSC1187	123AP
KSC1187-0	123AP
KSC1187-0	123AP
KSC1187-R	123AP
KSC1187R	123AP
KSC1507	198
KSC1507-0	198
KSC1507-0	198
KSC1507-Y	198
KSC1507A-Y	198
KSC1507K	198
KSC1507L	198
KSC1507Q	198
KSC1507R	198
KSC1507Y	198
KSC1520	198
KSC1520(O)	198
KSC1520(Y)	198
KSC1520-0	198
KSC15200	198
KSC1520R	198
KSC1520Y	198
KSC1674	108
KSC1674-0	108
KSC1674-0	108
KSC1674-R	229
KSC16740	229
KSC1674R	108
KSC1675	123AP
KSC1675-0	123AP
KSC1675-0	123AP
KSC1675-Y	123AP
KSC1675Y	123AP
KSC1815GR	85
KSC1815Y	85
KSC1875K	165
KSC1875L	165
KSC2073	375
KSC2230-0	399
KSC2230-Y	399
KSC2310	399
KSC2310-0	399
KSC2310-0	399
KSC2310-0Y	399
KSC2310-Y	399
KSC2310Y	399
KSC2330	399
KSC2330-0	399
KSC2330-0	399
KSC2330-Y	399
KSC2330Y	399
KSC2331	24
KSC2331-0	24
KSC2331-0	24
KSC2331-Y	24
KSC2331Y	24
KSC2785	2361
KSC8150	123AP
KSC9450	123AP
KSC10960	186A
KSC15200	198
KSC23300	399
KSC23310	24
KSC-838	123AP
KSC-1507-0	198
KSC-1507-Y	198
KSC-2330-Y	399
KSD73	54
KSD73-0	331
KSD73-0	331
KSD73-Y	54
KSD730	54
KSD73Y	54
KSD227-0	85
KSD261	192
KSD261-0	192A
KSD261-1	192
KSD261-0	192
KSD261-0Y	192
KSD261-Y	192
KSD261Y	192
KSD288	241
KSD362	375
KSD362-N	291
KSD362-NR	375
KSD362-0	379
KSD362-R	375
KSD362N	375
KSD362R	379
KSD362Y	379
KSD363	379
KSD401	375
KSD401(O)	375
KSD401(Y)	375
KSD401-7	375
KSD401-G	375
KSD401-O	375
KSD401-R	375
KSD401-Y	375
KSD401G	375
KSD401O	375
KSD401R	375
KSD401Y	375
KSD415	287
KSD415-0	287
KSD415-0	287
KSD415-R	287
KSD415D	287
KSD415O	287
KSD415R	287
KSD415Y	287
KSD471-Y	297
KSD730	54
KSD807M	165
KSD815Y	123AP
KSD1051	130
KSD1052	181
KSD1055	130
KSD1056	130
KSD1057	181
KSD1553	177
KSD2203	181
KSD3055	130
KSD3771	181
KSD3772	181
KSD4150	287
KSD5000	2302
KSD5001	2302
KSD5002	2302
KSD5003	2302
KSD9701	181
KSD9701A	181
KSD9704	181
KSD9707	130
KSKE12C500	125
KSKE40C200	116
KSKE40C500	116
KSKE125C200	125
KSN362N	123AP
KSN362R	123AP
KSO33A	134A
KSO33B	134A
KSO36A	134A
KSO39A	134A
KSO39B	134A
KSO47A	135A
KSO47B	135A
KSO51A	135A
KSO56A	136A
KSO56B	136A
KSO62A	137A
KSO91A	139A
KSR1002	2355
KSR1003	2357
KSR1004	2359
KSR1102	2414
KSR1103	2416
KSR1104	2418
KSR1202	2355
KSR1203	2357
KSR1204	2359
KSR2002	2356
KSR2003	2358
KSR2004	2360
KSR2102	2415
KSR2103	2417
KSR2104	2419
KSR2202	2356
KSR2203	2358
KSR2204	2360
KT218	123AP
KT218F	194
KT600	293
KT600F	293
KT600G	198
KT600T	293
KT1017	121
KTA473	153
KTA473-0	153
KTA473-0	153
KTA562	290A
KTA562-0	290A
KTA562-0	290A
KTA562-Y	290A
KTA562-Y(GOLD STAR)	290A
KTA562A	290A
KTA5620	290A
KTA562TM	290A
KTA562TM-0	290A
KTA562TM-0(TA)	290A
KTA562TM-0	290A
KTA562TM-Y	290A
KTA562TM-Y(TA)	290A
KTA562TMY	290A
KTA562Y	290A
KTA733	159
KTA940	398
KTA949-0	32
KTA950-0	290A
KTA950-0	290A
KTA950-Y	294
KTA950-Y(TA)	294
KTA950Y	290A
KTA966AY	294
KTA968-Y	398
KTA968A-Y	398
KTA968Y	398
KTA1013-0	32
KTA1014	290A
KTA1015	290A
KTA1015(0)	290A
KTA1015-0	290A
KTA1015-0	290A
KTA1015-Y	290A
KTA1015-Y(TA)	290A
KTA1015A	290A
KTA1015Y	290A
KTA1015Y-(TA)	290A
KTA1266-TP-Y	290A
KTA1266Y	290A
KTA1270-TA-Y	290A
KTA1270-TP-Y	290A
KTA1270Y	290A
KTA5620	290A
KTA10150	290A
KTA-940	398
KTA-1015Y	290A
KTB595	55
KTB595-0	55
KTB596-0	197
KTB596-0	153
KTB834	55
KTB834-Y	55
KTB834Y	55
KTC200-Y	123A
KTC200Y	123A
KTC380-0	85
KTC380TM-0	85
KTC380TM-R	85
KTC388	85
KTC388A	85
KTC388A(TA)	85
KTC388A-TM	85
KTC388ATM	85
KTC388ATMFA	85
KTC388AVTM	85
KTC732TM-BL	199
KTC790-Y	152
KTC1173	152
KTC1173-0	152
KTC1173-0	152
KTC1569	376
KTC1627	382
KTC1627-0	382
KTC1627-Y	382
KTC1627A	382
KTC1627A-Y	382
KTC1627A-Y(TA)	382
KTC1627AY	382
KTC1627AY(TA)	382
KTC1627Y	382
KTC1815	85
KTC1815(TA)	85
KTC1815-0	85
KTC1815-0(TA)	85
KTC1815-BL	85
KTC1815-D	85
KTC1815-GR	85
KTC1815-O	85
KTC1815-Y	85
KTC1815-Y(TA)	85
KTC1815BL	85
KTC1815D	85
KTC1815FA-1	85
KTC1815GR	85
KTC1815TA	85
KTC1815Y	85
KTC1923-0	229
KTC1923-R	229
KTC1959-0	85
KTC1959-0	85
KTC1959-Y	85
KTC1959O	85
KTC1959Y	85
KTC2068	376
KTC2068(FA-1)	376
KTC2068-1	376
KTC2068FA-1	376
KTC2068I	376
KTC2073	375
KTC2073FA-2	375
KTC2120-0	289A
KTC2120-0	289A
KTC2120-Y	289A
KTC2120-Y(TR)	289A
KTC2120Y	289A
KTC2229	399
KTC2229-0	399
KTC2229-0	399
KTC2229-Y	399
KTC2229-Y(TA)	399
KTC2229D	399
KTC2229O	399
KTC2229Y	399
KTC2230	399
KTC2230-Y	399
KTC2230A	399
KTC2230A(Y)	399
KTC2230A-GR	399
KTC2230A-Y	399
KTC2230AY	399
KTC2230G-R	399
KTC2230Y	399
KTC2233	375
KTC2233FA-1	375
KTC2236AY	382
KTC2238A	375
KTC2238A-Y	375
KTC2383-Y	31
KTC2383Y	31
KTC2482	399
KTC2482(TA)	399
KTC2482FA-1	399
KTC2482K	399
KTC3197	107
KTC3197-TP	107
KTC3198-TA-Y	85
KTC3198-TP-Y	85
KTC3198TPY	85
KTC3198Y	85
KTC9014	123AP
KTC9014A	123AP
KTC9014A(C)	123AP
KTC9014A(D)	123AP
KTC9014AC	123AP
KTC9014C	123AP
KTC18154	85
KTC22290	399
KTC-1815BL	85
KTC-1815Y	85
KTC-2229K	399
KTD880	152
KTD880-0	152
KTD880-0	152
KTD880-Y	152
KTD880GR	152
KTD880Y	152
KTD1554	2302
KTD1555	2331
KTD1651	2302
KTD8800	152
KTH562TM-4	290A
KTTA10150	290A
KV1	102A
KV2	102A
KV4	102A
KV33V	615P
KV33VZ	615P
KV-1	102A
KV-2	102
KV-4	158
KV-4D	102
KVR10	140A
KX-1	519
KZ6	5071A
KZ6A	5071A
KZ6ZA	5071A
KZ7C	5014A
KZ1075	5015A
KZ1075-M	5015A
KZ-8A	5072A
L005-T1	931
L05-E	125
L036-T1	933
L3-3017148-1	5511
L3/2H	116
L4	199
L5	199
L6	199
L6-SAM(3)	2408
L6/2H	116
L7	199
L8/2H	116
L14F1	3036
L14F2	3036
L14H1	3034A
L14H2	3034A
L14H3	3034A
L14H4	3034A
L28M05-A	960
L32H	116
L33-SAM(3)	2414
L62H	116
L78M05	960
L78M05-RA	960
L78M05CV	960
L78M06	962
L78M06SA	962
L78M08	964
L78M09	1902
L78M09-SA	1902
L78M12	966
L78M12-LU	966
L78M12-RA	966
L78M12CV	966
L78M12RL	966
L78M15	968
L78M24	972
L78N05	977
L78N12	966
L78N12-RA	966
L82H	125
L103T1	703
L123	923
L123-T1	923
L123CB	923D
L123CT	923
L200	5629
L200CH	1942
L200CV	1942
L201	2011
L201B	2011
L201E5	5655
L202	2012
L202B	2012
L203	2013
L204	2014
L272M	1854M
L274	1045
L292	7006
L292N	7006
L293	1749
L293B	1749
L295	1750
L296	1681
L296V	1681
L401E5	5656
L404F71	5629
L532 008 012	128
L532-008-012	128
L601B	2016
L602B	2017
L842	108
L2001L3	5638
L2001L5	5638
L2001L7	5638
L2001L9	5638
L2003M9	5640
L2004F31	5629
L2004F51	5629
L2004F71	5629
L2004F91	5629
L2004L5	5638
L2004L7	5638
L2004L9	5638
L2005CT	931
L2005CV	960
L2006L6	5638
L2006L7	5638
L2006L9	5638
L2008L6	5638
L2008L7	5638
L2008L9	5638
L4000KS	5652
L4001L3	5638
L4001L5	5638
L4001L7	5638
L4001L9	5638
L4004F31	5629
L4004F51	5629
L4004F71	5629
L4004F91	5629
L4004L3	5638
L4004L5	5638
L4004L7	5638
L4004L9	5638
L4006L6	5638
L4006L7	5638
L4006L9	5638
L4008L6	5638
L4008L7	5638
L4008L9	5638
L5021	102A
L5022	102A
L5022A	102A
L5025	102A
L5025A	102A
L5108	160
L5121	160
L5122	160
L5181	160
L5630	615P
L5631	615P
L5631-AA	615P
L6008L9	5638
L7805CT	931
L7805CV	960
L7806CV	962
L7808CV	964
L7812CT	1914
L7812CV	966
L7812T	1914
L7815CT	1916
L7815CV	968
L7815T	1916
L7818CT	1920
L7818T	1920
L7824CT	1924
L7824CV	972
L7824T	1924
L7905CT	1913
L7912CT	1915
L7915CT	1919
L7918CT	1923
L7918T	1923
L7924CT	1925
L2091241-2	160
L2091241-3	160
L5320000162	128
L-023762	130
L-026237	123AP
L-061366	199
L-417-29BLK	121
L-417-29GRN	121
L-417-29WHT	121
L-417-60	121
L-612099	7408
L-612106	7425
L-612107	7432
L-612150	74153
L-612158	7416
L-612161	74164
LA72	3061
LA72A	3061
LA300	116
LA600	116
LA703E	703
LA800	116
LA1041	1013
LA1110	1014
LA1111	1002
LA1111P	1002
LA1130	1533
LA1140	1604
LA1150	1541
LA1160	1578
LA1200	1003
LA1201	1003
LA1201B	1003
LA1201BS	1003
LA1201C	1003
LA1201C-W	1003
LA1201T	1003
LA1201W	1003
LA1202	1003
LA1222	1227
LA1231	1441
LA1231N	1441
LA1240	1214
LA1245	1608
LA1320	1443
LA1320A	1443
LA1353	1080
LA1354	1187
LA1357	1483
LA1357B	1483
LA1357N	1483
LA1357NB	1483
LA1357R	1483
LA1363	712
LA1363W	712
LA1364	1004
LA1364N	1004
LA1365	712
LA1365#	712
LA1365N	712
LA1366	1158
LA1366N	1158
LA1368	738
LA1368BP	738
LA1368CW	738
LA1373	1094
LA1374	1121
LA1375	1122
LA1376	1122
LA1385	1245
LA1388	1535
LA1390	1216
LA1390B	1216
LA1390C	1216
LA1835	1245
LA2100	1447
LA2101	1447
LA2600	1439
LA3086N	912
LA3101	1221
LA3115	1453
LA3120	1457
LA3122	1455
LA3130	1449
LA3133	1451
LA3148	727
LA3150	1459
LA3155	1215
LA3160	1170
LA3161	1659
LA3190	1216
LA3201	1179
LA3210	1466
LA3220	1634
LA3300	1005
LA3301	1006
LA3310	1230
LA3350	1217
LA3350A	1217
LA3350B	1217
LA3361	1248
LA3361A	1248
LA3370	1461
LA4030	1009
LA4030P	1009
LA4031	1010
LA4031P	1010
LA4100	1180
LA4101	1180
LA4102	1228
LA4110	1472
LA4112	1463
LA4125	1382
LA4125T	1382
LA4140	1465
LA4170	1477
LA4175	1481
LA4185	1637
LA4185T	1637
LA4185TM	1637
LA4192	1667
LA4192S	1667
LA4201	1470
LA4260	1685
LA4261	1685
LA4270	1798
LA4400Y	1211
LA4420	1211
LA4422	1388
LA4430	1211
LA4440	1377
LA4440-R	1377
LA4440R	1377
LA4445	1707
LA4460	1390
LA4461	1391
LA4505	1675
LA5700	1531
LA6324	987
LA6339	834
LA6358	928M
LA6358S	928S
LA6458D	778A
LA6458DF	778A
LA6458S	1529
LA6780	3079
LA7016	1781
LA7040	1558
LA7220	1799
LA7317	15038
LA7330	15039
LA7502	15001
LA7506	1542
LA7520	1728
LA7520N	1728
LA7530	1827
LA7530N	1827
LA7601	1673
LA7601G	1673
LA7601W	1673
LA7620	1845
LA7621	15015
LA7625	1856
LA7626	1838
LA7629	7008
LA7644N	1863
LA7655	1863
LA7655N	1863
LA7760	1800
LA7761	1801
LA7800	1538
LA7800R	1538
LA7802	1539
LA7806	1540
LA7811	1772
LA7830	1773
LA7831	1797
LA7835	1855
LA7835-TV	1855
LA7837	1855
LA7910	1658
LA7913	1837
LA7915	1836
LA7916	7004
LA7920	1708
LA-71	3052
LA-72	3061
LA-72A	3061
LA-73	3065
LA-74	3056
LA-120	1003
LA-1201	1003
LA-1201T	1003
LA-3300	1005
LA-3301	1006
LA-3410	3054
LA-3420	3063
LA-3440	3059
LA-3610	3053
LA-3620	3062
LA-3640	3058
LA-3810	3055
LA-3820	3064
LA-3840	3060
LA-6760	3078
LA-6780	3079
LA-7601W	1673
LAA300	116
LAA600	116
LAA800	116
LAD010	1119
LAD011	1120
LAD-011	1120
LAS14CB	934
LAS15A05	931
LAS15A12	933
LAS15CB	934
LAS19CB	934
LAS1405	931
LAS1412	1912
LAS1415	1918
LAS1512	1914
LAS1515	1916
LAS1524	1924
LAS1605	931
LAS1612	933
LAS1805	1913
LAS1812	1915
LAS1815	1919
LAS1818	1923
LAS1824	1925
LAS1905	932
LAS1912	933
LAS-14CB	934
LAS-14CB-001	934
LAS-1905	932
LAS-1912	933
LB1231	2011
LB1232	2012
LB1233	2013
LB1234	2014
LB1260	2080
LB1261	2081
LB1272	2082
LB1273R	2083
LB1274	2077
LB1274K	2077
LB1275	2076
LB1287	2084
LB1288	2084
LB1290	2021
LB1331	1556
LB1332	1556
LB1405	1515
LB1409	1513
LB1415	1514
LB1416	1512
LB1426	1511
LB1515	1662
LB1649	1774
LB2000	9946
LB2001	9962
LB2002	9930
LB2003	9932
LB2004	9944
LB2005	9933
LB2006	9936
LB2007	9935
LB2030	9945
LB2031	9093
LB2032	9099
LB2100	9949
LB2101	9963

PART NUMBER	NTE REPLACEMENT
LB2102	9961
LB2106	9937
LB2130	9948
LB2131	9094
LB2132	9097
LB3000	7400
LB3001	7410
LB3001(FANON)	1016
LB3002	7420
LB3003	7430
LB3004	7450
LB3005	7460
LB3006	7404
LB3008	7402
LB3009	7440
LB3060	7480
LB3150	7490
LB3175	7491
LB-2000	9946
LB-6710	3074
LB-6730	3076
LB-6740	3075
LB-6750	3076
LBGL2	238
LC0.09M1115	116
LC339DP	834
LC4001B	4001B
LC4001BP	4001B
LC4011	4011B
LC4011B	4011B
LC4013B	4013B
LC4066B	4066B
LC4069UB	4069
LC4071B	4071B
LC4081B	4081B
LC7120	1536
LC7131	1475
LC7250	1537
LC.09M	116
LCA1000	243
LCA1001	243
LCA8350	246
LCA8350A	246
LCA8350B	246
LC0.09M1113	506
LCS1008P	712
LD34R	519
LD40-1	3025
LD40-11	3025
LD50-1	3025
LD50-11	3025
LD52-1	3022
LD52-2	3023
LD128	112
LD128(RCA)	112
LD300	1016
LD308	3007
LD1020	1012
LD1020A	1012
LD1041	1013
LD1110	1014
LD3000	1015
LD3001	1016
LD3001W	1016
LD3110	1152
LD3110A	1152
LD3120	1019
LD-30B	3007
LD-40-1	3025
LD-40-11	3025
LD-50-1	3025
LD-50-11	3025
LD-52-1	3022
LD-52-2	3023
LD-1110	1014
LDA400	123AP
LDA400MP	123AP
LDA401	123AP
LDA401MP	123AP
LDA402	123AP
LDA404	128
LDA405	128
LDA406	128
LDA408	128
LDA410	199
LDA420	172A
LDA450	129
LDA451	294
LDA452	106
LDA453	294
LDA454	234
LDA455	234
LDS200	128
LDS201	128
LDS202	106
LDS203	106
LDS206	123AP
LDS207	199
LDS208	172A
LDS210	123AP
LDS257	234
LDS-A301RD	3061
LDS-A302RI	3063
LDS-A303RG	3064
LDS-A303RI	3064
LDS-A304RM	3062
LDS-A311RD	3052
LDS-A401RD	3066
LDS-A404RM	3070
LDS-A406RE	3068
LDS-C401RD	3069
LDS-C404RM	3071
LDSA303RI	3064
LDSA311RD	3052
LDSA406RE	3068
LED55B	3028
LED56	3028
LED56F	3028
LED21092	9951
LF347	859
LF347N	859
LF351	857M
LF353N	858M
LF355AH	937
LF355AL	937
LF355AN	937M
LF355AP	937M
LF355AT	937
LF355BN	937M
LF355BP	937M
LF355DE	937M
LF355H	937
LF355J	937M
LF355JG	937M
LF355L	937
LF355N	937M
LF355P	937M
LF355T	937
LF356AN	937M
LF356AT	937
LF356H	937
LF356J	937M
LF356JG	937M
LF356L	937
LF356N	937M
LF356P	937M
LF356T	937
LF357AN	937M
LF357AP	937M
LF357AT	937
LF357BF	937
LF357BN	937M
LF357BR	937
LF357DE	937M
LF357H	937
LF357J	937M
LF357JG	937M
LF357L	937
LF357MF	937M
LF357MR	937M
LF357N	937M
LF357P	937M
LF357T	937
LF13331	861
LF13331N	861
LFP351	857M
LH740A	940
LH740AC	940
LH21256	4256
LH21256-10	4256
LHC5-8	518
LHC5-10	518
LHC10-8	518
LHC10-10	518
LHC25-8	518
LHC25-10	518
LID929	199
LID930	199
LJ152	159
LJ152(0)	159
LJ152(0)	106
LJ152-0	159
LJ152B	159
LJ152G	106
LJ-152	159
LK1352P	749
LL2	116
LL-2	116
LLB-23	123AP
LLLL93-001	311
LLM309K	309K
LLM320K-5	1913
LLM320K-12	1915
LLM320K-15	1919
LLM323K	931
LLM338	935
LLM338K	935
LLM340K5	931
LLM340K12	933
LLM340K-12	1914
LLM340K-15	1916
LLM340K-18	1920
LLM340K-24	1924
LM14CB	934
LM19CB	934
LM34P-5.0	960
LM78GCP	953
LM78L05	977
LM78L05ACH	977
LM78L05ACZ	977
LM78L05CH	977
LM78L05CZ	977
LM78L06	988
LM78L08ACH	981
LM78L08ACZ	981
LM78L08CH	981
LM78L08CZ	981
LM78L12	950
LM78L12ACH	950
LM78L12ACZ	950
LM78L12AGZ	950
LM78L12CH	950
LM78L12CZ	950
LM78L15ACH	951
LM78L15ACZ	951
LM78L15AGZ	951
LM78L15CH	951
LM78L15CZ	951
LM78M05CP	960
LM78M06CT	962
LM78M08CP	964
LM78M08CT	964
LM78M12CP	966
LM78M12CT	966
LM78M15CP	968
LM78M15CT	968
LM78M18CP	958
LM78M18CT	958
LM78M24CP	972
LM78M24CT	972
LM79GCP	954
LM79L05	1917
LM79L05A	1917
LM79L05ACZ	1917
LM79L06	977
LM79L15	1905
LM79L15ACZ	1905
LM79M05CP	961
LM79M12CP	967
LM79M15CP	969
LM101H	1171
LM120C	107
LM120K-5	1913
LM120K-12	1915
LM120K-15	1919
LM120K-18	1923
LM120K-24	1925
LM123H	108
LM140AK12	1912
LM140AK-12	1912
LM140K12	1912
LM140K-12	1912
LM150	970
LM150K	970
LM201AH	1171
LM201AL	1171
LM201H	1171
LM224AD	987
LM224AF	987
LM224AJ	987
LM224AN	987
LM224D	987
LM224J	987
LM224N	987
LM239AD	834
LM239AJ	834
LM239AN	834
LM301	1171
LM301AD	1171
LM301AG	1171
LM301AH	1171
LM301AL	1171
LM301AN	975
LM301AN-8	975
LM301AP	975
LM301AP1	975
LM301AT	975
LM301AV	975
LM301H	1171
LM305	1928
LM305H	1928
LM307AN-8	976
LM307J	976
LM307N	976
LM307P	976
LM308	938
LM308AH	938
LM308AJ-8	938M
LM308AN	938M
LM308AT	938
LM308D	938M
LM308H	938
LM308N	938M
LM308T	938
LM309	309K
LM309DA	309K
LM309K	309K
LM309KC	309K
LM310H	924
LM311	922
LM311D	922SM
LM311FP	922SM
LM311H	922
LM311HW	922
LM311L	922
LM311N	922M
LM311NDS	922M
LM311P	922M
LM311PG	922M
LM311T	922
LM316	945
LM316H	945
LM317	956
LM317K	970
LM317KC	970
LM317L	1900
LM317LZ	1900
LM317T	956
LM317TW	956
LM318D	918SM
LM318FP	918SM
LM318H	918
LM318J-8	918M
LM318JG	918M
LM318L	918
LM318M	918SM
LM318N	918M
LM318P	918M
LM319A	919D
LM319D	919D
LM319H	919
LM319K	919
LM319N	919D
LM320K5	1913
LM320K5.0	1913
LM320K12	1915
LM320K15	1919
LM320K24	1925
LM320K-5	1913
LM320K-5.0	1913
LM320K-12	1915
LM320K-15	1919
LM320K-24	1925
LM320MP-24	971
LM320T5.0	961
LM320T-5	961
LM320T-6	963
LM320T-6.0	963
LM320T-8	965
LM320T-12	967
LM320T-15	969
LM320T-18	959
LM320T-24	971
LM323	931
LM323K	931
LM324	987
LM324AD	987
LM324AF	987
LM324AJ	987
LM324AN	987
LM324D	987SM
LM324FP	987SM
LM324J	987
LM324M	987SM
LM324N	987
LM336-Z2.5	952
LM336Z2.5	952
LM336Z-2.5	952
LM337	957
LM337K	1911
LM337LZ	1901
LM337T	957
LM338	935
LM338K	935
LM339	834
LM339AD	834
LM339AJ	834
LM339AN	834
LM339D	834SM
LM339DP	834
LM339FP	834SM
LM339N	834
LM340-5	931
LM340AK12	1914
LM340AK-12	1914
LM340DA5	309K
LM340K5.0	309K
LM340K12	1914
LM340K15	1916
LM340K50	309K
LM340K-5	931
LM340K-5.0	309K
LM340K-12	1914
LM340K-12.0	1914
LM340K-12V	1914
LM340K-15	1916
LM340K-18	1920
LM340K-24	1924
LM340KC5	931
LM340KC12	933
LM340KC-5	931
LM340KC-12	1914
LM340KC-15	1916
LM340KC-18	1920
LM340T	960
LM340T5	960
LM340T12	966
LM340T24	972
LM340T-5	960
LM340T-5.0	960
LM340T-5.0R	960
LM340T-6	962
LM340T-6.0	962
LM340T-6.0R	962
LM340T-8	964
LM340T-8.0	964
LM340T-10	1932
LM340T-12	966
LM340T-12R	966
LM340T-15	968
LM340T-15R	968
LM340T-18	958
LM340T-24	972
LM340T-24R	972
LM340U5	960
LM340U6	962
LM340U8	964
LM340U12	966
LM340U15	968
LM340U24	972
LM341-5	960
LM341-6	962
LM341-12	966
LM341-15	968
LM341-24	972
LM341P8.0	964
LM341P12	966
LM341P15	968
LM341P50	960
LM341P-5.0	960
LM341P-6.0	962
LM341P-8.0	964
LM341P-12	966
LM341P-15	968
LM341P-24	972
LM342P5.0	960
LM342P8.0	964
LM342P12	966
LM342P-12	966
LM342P-15	968
LM348	948
LM348D	948SM
LM348FP	948SM
LM348J	948
LM348N	948
LM350K	970
LM350KCG	970
LM358	928M
LM358AD	928SM
LM358AH	928
LM358AM	928SM
LM358AN	928M
LM358AT	928M
LM358D	928SM
LM358FP	928SM
LM358H	928
LM358J	928M
LM358JG	928M
LM358L	928
LM358M	928SM
LM358N	928M
LM358P	928M
LM358S	928S
LM358T	928
LM359N	869
LM376N	1930
LM377	990
LM377N	990
LM380	740A
LM380N	740A
LM381	942
LM381A	942
LM381AN	942
LM381N	942
LM383	1232
LM383T	1232
LM384	862
LM384N	862
LM386	823
LM386A	823
LM386AN	823
LM386N	823
LM386N-1	823
LM386N-3	823
LM387	824
LM387AN	824
LM387N	824
LM388N	828
LM388N-1	828
LM388N-2	828
LM390	825
LM390AH	193
LM390AJ	193
LM390AL	193
LM390N	825
LM393	943M
LM393D	943SM
LM393FP	943SM
LM393H	943
LM393N	943M
LM393P	943M
LM496N(TRANS)	123A
LM555	955M
LM555C	955M
LM555CN	955M
LM556	978
LM556CN	978
LM556N	978
LM565CN	989
LM566	994M
LM566CN	994M
LM566F	123A
LM566N	994M
LM567	832
LM567C	832
LM567CD	832SM
LM567CM	832SM
LM567CN	832
LM567GN	832
LM567N	832
LM703	703
LM703E	703
LM703H	703
LM703L	703
LM703LH	703
LM709C	909
LM709CH	909D
LM709CKR	909
LM709CN	909D
LM709H	909
LM710C	910
LM710CH	910
LM710CN	910D
LM710H	910
LM711C	911
LM711CH	911
LM711H	911
LM723	923
LM723C	923D
LM723CD	923D
LM723CH	923
LM723CN	923D
LM723DC	923
LM723H	923
LM725CH	925
LM733CH	927
LM733CN	927D
LM741	941
LM741CD	941D
LM741CH	941
LM741CN	941M
LM741H	941
LM741N	941M
LM747AJ	947D
LM747C	947
LM747CD	947D
LM747CH	947
LM747CJ	947D
LM747CN	947D
LM747EJ	947D
LM747EN	947D
LM747H	947
LM747J	947D
LM748CD	975SM
LM748CH	975
LM748CN	975
LM1011	2003
LM1011AN	2003
LM1011N	2003
LM1090E	123A
LM1090F	123A
LM1090G	123A
LM1110A	108
LM1110B	107
LM1117	199
LM1117C	199
LM1117D	123A
LM1120B	107
LM1120C	107
LM1123H	108
LM1133	233
LM1138	229
LM1138E	229
LM1138E/F	229
LM1138F	229
LM1138G	229
LM1138G/F	229
LM1138G/H	108
LM1138H	229
LM1138H/I	229
LM1138I	229
LM1149	159
LM1153	159
LM1155	123A
LM1157	182
LM1159	177
LM1160	116
LM1303	725
LM1303N	725
LM1303P	725
LM1307	722
LM1307A	722
LM1307E	722
LM1307N	722
LM1307P	722
LM1307PQ	722
LM1310	801
LM1310N	801
LM1351	748
LM1351N	748
LM1381	229
LM1391	815
LM1391P	815
LM1403	123AP
LM1404	159
LM1405W	931
LM1412W	933
LM1415-6	123AP
LM1415-7	123AP
LM1458	778A
LM1458CN	778A
LM1458N	778A
LM1488	75188
LM1489	75189
LM1496	973
LM1496H	973
LM1496J	973D
LM1496N	973D
LM1540	123A
LM1540C	199
LM1566F	123AP
LM1614D	123A
LM1614M	123A
LM1729S	287
LM1795	159
LM1796	399
LM1800	743
LM1800A	743
LM1808	826
LM1808N	826
LM1818	123A
LM1818(ZENITH)	123A
LM1819	1670
LM1819N	1670
LM1820	744
LM1820A	744
LM1820N	744
LM1823N	875
LM1829	797
LM1834	614
LM1841	737
LM1841A	737
LM1841N	737
LM1845	731
LM1848	821
LM1862	116
LM1877	990
LM1877N	990
LM1877N-3	990
LM1877N-9	990
LM1877N-20	990
LM1877N-26	990
LM1880	852
LM1880N	852
LM1884	1655
LM1889	846
LM1889N	846
LM1905W	932
LM1932	506
LM2020	106
LM2111	708
LM2111A	708
LM2111M	708
LM2111N	708
LM2113	709
LM2113A	709
LM2113N	709
LM2152	123AP
LM2152(SAMPO)	123AP
LM2589	159
LM2682	123AP
LM2682(SAMPO)	123AP
LM2701	190
LM2896	1687
LM2896P	1687
LM2896P-2	1687
LM2900N	992
LM2901	834
LM2901J	834
LM2901N	834
LM2902J	987
LM2902N	987
LM2904JG	928M
LM2904L	928
LM2904N	928M
LM2904P	928M
LM2917	995
LM2917-8	995M
LM2917N	995
LM2917N-8	995M
LM3011H	726
LM3012	726
LM3018	904
LM3019	905
LM3028	724
LM3039H	907
LM3045D	912
LM3045J	912
LM3045N	912
LM3046D	912
LM3046N	912
LM3053H	724
LM3054	917
LM3054N	917
LM3064	780
LM3064H	780
LM3064M	780
LM3064N	783
LM3064N-01	783
LM3065	712
LM3065N	712
LM3065N-01	712
LM3070	714
LM3070A	714
LM3070N	714
LM3071	715
LM3071N	715
LM3075	723
LM3075A	723
LM3075N	723
LM3080	996
LM3080N	996
LM3086D	912
LM3086N	912
LM3086W	912
LM3089	788
LM3089N	788
LM3189N	788
LM3301	992
LM3301N	992
LM3401N	992
LM3524	1720
LM3820N	744
LM3862M	823
LM3900	992
LM3900N	992
LM3909	876
LM3909N	876
LM3914	1508
LM3914N	1508
LM3915	1509
LM3915N	1509
LM3916	1549
LM3916N	1549
LM4250	944
LM4250CH	944
LM4250CJ	944M
LM4250CN	944M
LM4250H	944
LM4250J	944M
LM4558	778A
LM4558N	778A
LM7805CT	960
LM7808	964
LM7812	966
LM7812CK	933
LM7812CT	966
LM7815CT	968
LM7824T	972
LM7905CK	1913
LM7905CT	961
LM7905T	1913
LM7906CT	963
LM7908CT	965
LM7912CK	1915
LM7912CT	967
LM7912T	1915

PART NUMBER	NTE REPLACEMENT
LM7915CK	1919
LM7915CT	969
LM7915KM	1919
LM7915T	1919
LM7918CT	959
LM7924CK	1925
LM7924CT	971
LM7924T	1925
LM8000	192
LM8050I/J	123AP
LM8360	2060
LM8360(LED DISPLAY)	2060
LM8360(VF DISPLAY)	2061
LM8360D	2060
LM8360DH	2061
LM8361	2060
LM8361(LED DISPLAY)	2060
LM8361D	2060
LM8361DH	2060
LM8361W	2060
LM8560	2062
LM9016E/F	107
LM9016F	107
LM9018G/F	123AP
LM511160	181
LM711710CN	910D
LM-703LN	703
LM-1129	123A
LM-1130	123A
LM-1132	123A
LM-1133	123AP
LM-1147	123A
LM-1148	123A
LM-1149	159
LM-1150	159
LM-1151	159
LM-1153	159
LM-1154	171
LM-1155	123AP
LM-1156	191
LM-1157	182
LM-1158	116
LM-1159	177
LM-1160	116
LM-1307N	722
LM-1862	116
LM-2111	708
LM-2111N	708
LM-2589	159
LM-3241	987
LM_1133	123A
LMC555	955MC
LMC555CN	955MC
LMC7805CK	931
LMC7812CK	933
LMC7824CK	1924
LMC7905CK	1913
LMJ900	244
LMJ901	244
LMJ1000	243
LMJ1001	243
LMJ2500	246
LMJ2501	246
LMJ3000	245
LMJ3001	245
LMJ4030	250
LMJ4031	250
LMJ4032	250
LMJ4033	249
LMJ4034	249
LMJ4035	249
LMT540C	199
LMZX-10	140A
LN21	3021
LN21CP	3022
LN21RCPH	3022
LN21RCPHLMV	3022
LN21RCPHV	3022
LN21RPHL	3022
LN21W	3020
LN28RCPP	3007
LN28RP	3007
LN31	3024
LN31GCPHLMU	3024
LN31GPHL	3024
LN38GCPP	3010
LN38GPL	3010
LN41YCPH	3021
LN59	30001
LN59NV	30001
LN229RP	3160
LN247YP	3000
LN329GP	3161
LN347GP	3003
LN429YP	3162
LN447YP	3002
LN514RA	3068
LN526RA,M1	3074
LN526RA,M1	3074
LN1310	801
LN2064B	2085
LN3225	3007
LN75116	181
LN75497	130
LN76963	129
LP1H	116
LP2H	116
LP3H	116
LP4H	116
LPM3.6	134A
LPM3.6A	134A
LPM4.7	135A
LPM4.7A	135A
LPM5.6	136A
LPM5.6A	136A
LPM9.1	139A
LPM9.1A	139A
LPM11	141A
LPM11A	141A
LPM12	142A
LPM12A	142A
LPM13	143A
LPM13A	143A
LPM15	145A
LPM15A	145A
LPM27	146A
LPM27A	146A
LPM33	147A
LPM33A	147A
LPM56	148A
LPM56A	148A
LPM62	149A
LPM82	150A
LPM82A	150A
LPM110	151A
LPM110A	151A
LPZT12	142A
LPZT15	145A
LPZT27	146A
LPZT33	147A
LR33H	5005A
LR39CH	134A
LR47CH	135A
LR51CH	135A
LR56CH	135A
LR62CH	137A
LR91CH	139A
LR100CH	140A
LR120CH	142A
LR150CH	145A
LR4089	1690
LR4099	1691
LR4173	1731
LR40981	1693
LR40992	1691
LR40993	1692
LRQ849	123AP
LRR50	116
LRR100	116
LRR200	116
LRR300	116
LRR400	116
LRR500	116
LRR-50	116
LRR-100	116
LRR-200	116
LRR-300	116
LRR-400	116
LRR-500	116
LS00	74LS00
LS14	74LS14
LS32	74LS32
LS52	104
LS74	74LS74A
LS139	74LS139
LS166	74166
LS175	74LS175
LS245	74LS245
LS367	74LS367
LS373	74LS373
LS374	74LS374
LS703L	703
LS3705	123AP
LS4558	778A
LS4558N	778A
LS5484	132
LS5485	132
LS-0031-AR-218	199
LS-0066	152
LS-0067	153
LS-0079-01	159
LS-0079-02	159
LS-0085-01	123AP
LS-0095-AR-2I3	199
LS-0095-AR-213	199
LS-0142	737
LSC1008	712
LSC1008P	712
LSC10089	712
LSM-13L	3024
LSM-13L-50	3024
LSM-23L	3021
LSM-23L-A	3021
LST4610AE	3070
LST5253	3024
LST5353	3021
LST5753	3022
LT1016	108
LT1016(E)	123AP
LT1016D	108
LT1016E	108
LT1016H	229
LT1016I	108
LT1016I,H	123AP
LT1016T,H	123AP
LT3524	1720
LT3525	1721
LT3525A	1721
LTA1000G	3116
LTA1000HR	3115
LTA1000Y	3117
LTA-1000G	3116
LTA-1000HR	3115
LTA-1000Y	3117
LTD6740R	3075
LTD-6740R	3075
LTE1016	229
LTE1016(G.E.)	108
LTH1016	229
LTH1016(G.E.)	108
LTI1016	107
LTIP640	270
LTIP641	270
LTIP642	270
LTIP645	271
LTIP646	271
LTIP647	271
LTK4N25	3040
LTK4N26	3040
LTK4N27	3040
LTK4N28	3040
LTK4N32	3083
LTK4N33	3083
LTK4N35	3041
LTK4N37	3041
LTK6N135	3092
LTK6N136	3092
LTK6N137	3087
LTK6N138	3093
LTK6N139	3093
LTK702V	3041
LTK702VA	3041
LTK702VB	3041
LTK702VC	3041
LTK703VC	3043
LTK703VD	3041
LTK713V	3041
LTK829	3086
LTL9213A	3169
LTL9233A	3170
LTL9253A	3171
LTL53173Y	3182
LTL54173G	3181
LTL57173HR	3180
LTL-298VJ	3026
LTL-307E	3022
LTL-307EA	3023
LTL-307G	3024
LTL-307Y	3021
LTL-4203	3020
LTL-4223	3022
LTL-4233	3024
LTL-4253	3021
LTL-4293	3023
LTL-9233A	3170
LTL-53173Y	3182
LTL-57173HR	3180
LTS312AG	3054
LTS312AR	3052
LTS312AY	3055
LTS312G	3054
LTS312Y	3055
LTS313AR	3057
LTS3401LP	3080
LTS4610AE	3070
LTS4610E	3070
LTS4640AE	3071
LTS4640E	3071
LTS4710AR	3068
LTS4710R	3068
LTS4740AR	3069
LTS4740R	3069
LTS6780R	3079
LTS-312-AG	3054
LTS-312AE	3053
LTS-312AG	3054
LTS-312AR	3052
LTS-312AY	3055
LTS-312G	3054
LTS-312Y	3055
LTS-313AR	3057
LTS-3401LP	3080
LTS-4610AE	3070
LTS-4610E	3070
LTS-4640AE	3071
LTS-4640E	3071
LTS-4710AR	3068
LTS-4740AR	3069
LTS-4740R	3069
LU2N544	126
LUA7805KC	931
LUA7812KC	933
LZ4.7	135A
LZ5.6	136A
LZ10	140A
LZ-081	5016A
LZZ1-3.3	5066A
LZZ1-3.6	134A
LZZ1-3.9	5067A
LZZ1-4.3	5068A
LZZ1-4.7	5069A
LZZ1-5.1	135A
LZZ1-5.6	136A
LZZ1-6.2	137A
LZZ1-6.8	5071A
LZZ1-7.5	138A
LZZ1-8.2	5072A
LZZ1-9.1	139A
LZZ1-10	140A
LZZ1-11	5074A
LZZ1-12	142A
LZZ1-14	144A
LZZ1-15	145A
LZZ1-20	5079A
LZZ1-22	5080A
LZZ1-24	5081A
LZZ1-26	146A
LZZ1-27	146A
LZZ1-29	5084A
LZZ1-33G	147A
LZZ1-36	5085A
LZZ1-39	5086A
LZZ1-43	5087A
LZZ1-47	5088A
LZZ1-51	5089A
LZZ1-55	148A
LZZ1-56	5090A
LZZ1-62	149A
LZZ1-68	5092A
LZZ1-82	150A
LZZ1-91	5095A
LZZ1-110B	151A
LZZ1-115G	141A
LZZ1-120	5097A
LZZ1-128	143A
LZZ1-140	5099A
LZZ1-150	5100A
LZZ1-160	5101A
LZZ1-161	5075A
LZZ1-170	5102A
LZZ1-180	5103A
LZZ1-190	5104A
LZZ1-200	5105A
LZZ1-200G	5105A
M001003711	199
M07060320	519
M07070304	85
M001-000029	6400
M0027	116
M07061304	152
M07091331	605A
M07140303	91
M07140320	5029A
M07240320	5802
M07370305	90
M07370306	91
M07370343	778A
M07390303	85
M07390304	290A
M0C3010	3047
M0C3011	3047
M0C3020	3048
M0C3021	3048
M0C3030	3049
M0C3031	3049
M0C8030	3044
M0C8050	3045
M0TMJE371	185
M0TMJE521	184
M0Z	116
M012	108
M024	108
M094-585-46	159
M0412303	153
M05174321	5005A
M07115343	1227
M07133322	5016A
M07139304	459
M07141322	5023A
M071442320	519
M07215303	85
M07215304	290A
M07288320	5031A
M07391320	5802
M07447321	156
M07447322	5018A
M07454303	85
M07461346	1214
M1-151R	125
M1-301	177
M1H	116
M1S-12795B	130
M1X	128
M1Z	116
M2.5A	156
M2B	125
M2N168A	101
M4	194
M4B31	116(4)
M4B31-13	116
M4B41	156(4)
M4B41-13	156
M4B51-11	156
M4B-31-22	5312
M4C51	5304
M4C-31	125
M4HZ	116
M4M1	156
M4M5	156
M4M9	156
M4Z3.3	134A
M4Z3.3A	134A
M4Z3.9	134A
M4Z3.9A	134A
M4Z4.7	135A
M4Z4.7-20	135A
M4Z4.7A	135A
M4Z5.1	135A
M4Z5.1-20	135A
M4Z5.1A	135A
M4Z5.6	136A
M4Z5.6-20	136A
M4Z5.6A	136A
M4Z6.2	137A
M4Z6.2-20	137A
M4Z6.2A	137A
M4Z9.1	139A
M4Z9.1-20	139A
M4Z9.1A	139A
M4Z10	140A
M4Z10-20	140A
M4Z10A	140A
M4Z12	142A
M4Z12-20	142A
M4Z12A	142A
M4Z15	145A
M4Z15-20	145A
M4Z15A	145A
M4Z27	146A
M4Z27-20	146A
M4Z27A	146A
M4Z33	147A
M4Z62	149A
M4Z62A	149A
M4Z82	150A
M4Z110	151A
M5	194
M5A	283
M5B	283
M5C	283
M5D	283
M5F7805	960
M5G1400	2800
M5K4164	4164
M5K4164-15	4164
M5K4164-20	4164
M5L2708K	2708
M5L2708K-65	2708
M5L2708S	2708
M5L2708S-65	2708
M5L2716K	2716
M5L2716K-65	2716
M5L2716S	2716
M5L2716S-65	2716
M5L2764K	2764
M5L2764K-2	2764
M5L5101	65101
M5L8255AP-5	8255
M5M4256	21256
M5M4256-15	21256
M5M37256	21256
M5M37256-15	21256
M6	194
M6.8	614
M6-SAM(3)	2409
M6HZ	116
M7	234
M7LS86BP	74LS86
M8D03	727
M8D03(MOTOROLA)	727
M8HZ	125
M9Z	139A
M10Z	140A
M12	116
M12Z	142A
M14	116
M15Z	145A
M21C	5404
M21C5	5404
M21C/Q	5404
M21C/R	5404
M21CQ	5404
M21CR	5404
M21CY	5404
M22	116
M23C	5455
M24	123AP
M24A	123AP
M24B	123AP
M25	123AP
M25A	123AP
M25A2	123AP
M25B	123AP
M25B2	123AP
M26	177
M26W0	601
M27Z	146A
M34A	109
M42	116
M51	109
M54	123AP
M54A	123AP
M54B	123AP
M54BLK	123AP
M54BLU	123AP
M54BRN	123AP
M54C	123AP
M54D	123AP
M54E	123AP
M54GRN	123AP
M54ORN	123AP
M54RED	123AP
M54WHT	123AP
M54YEL	123AP
M60	109
M62	116
M65A	159
M65B	159
M65C	159
M65D	159
M65E	159
M65F	159
M67	116
M67A	116
M67B	116
M67C	116
M68	116
M68A	116
M68B	116
M68C	116
M69	116
M69A	116
M69B	116
M69C	116
M70	116
M70A	116
M70B	116
M70C	116
M71	116
M71A	116
M71B	116
M71C	116
M72	125
M72A	125
M72B	125
M72C	125
M72D	156
M73	125
M73A	125
M73B	125
M73C	125
M74LDS132P	74LS132
M74LS00P	74LS00
M74LS009	74LS00
M74LS02P	74LS02
M74LS03P	74LS03
M74LS04P	74LS04
M74LS05P	74LS05
M74LS06	74LS06
M74LS08P	74LS08
M74LS09P	74LS09
M74LS10P	74LS10
M74LS11P	74LS11
M74LS12P	74LS12
M74LS13P	74LS13
M74LS14P	74LS14
M74LS15P	74LS15
M74LS20P	74LS20
M74LS21P	74LS21
M74LS22P	74LS22
M74LS27P	74LS27
M74LS30P	74LS30
M74LS32P	74LS32
M74LS37P	74LS37
M74LS38P	74LS38
M74LS40P	74LS40
M74LS42P	74LS42
M74LS47P	74LS47
M74LS48P	74LS48
M74LS51P	74LS51
M74LS73AP	74LS73
M74LS73P	74LS73
M74LS74AP	74LS74A
M74LS74P	74LS74A
M74LS75P	74LS75
M74LS76AP	74LS76A
M74LS78P	74LS78
M74LS83AP	74LS83A
M74LS83P	74LS83A
M74LS85P	74LS85
M74LS86BP	74LS86
M74LS86P	74LS86
M74LS90P	74LS90
M74LS92P	74LS92
M74LS93P	74LS93
M74LS95B	74LS95B
M74LS107AP	74LS107
M74LS107P	74LS107
M74LS109P	74LS109A
M74LS112AP	74LS112A
M74LS113P	74LS113
M74LS114P	74LS114
M74LS123P	74LS123
M74LS125AP	74LS125A
M74LS126AP	74LS126A
M74LS133	74LS133
M74LS133P	74LS133
M74LS136P	74LS136
M74LS138BP	74LS138
M74LS138P	74LS138
M74LS139P	74LS139
M74LS151P	74LS151
M74LS153P	74LS153
M74LS155P	74LS155
M74LS156P	74LS156
M74LS157P	74LS157
M74LS158P	74LS158
M74LS160P	74LS160A
M74LS161AP	74LS161A
M74LS161P	74LS161A
M74LS162P	74LS162A
M74LS163P	74LS163A
M74LS164P	74LS164
M74LS165	74LS165
M74LS165P	74LS165
M74LS166	74LS166
M74LS166AP	74LS166
M74LS166P	74LS166
M74LS170P	74LS170
M74LS173P	74LS173A
M74LS174P	74LS174
M74LS175P	74LS175
M74LS190P	74LS190
M74LS191P	74LS191
M74LS192P	74LS192
M74LS193P	74LS193
M74LS194A	74LS194A
M74LS195P	74LS195A
M74LS196P	74LS196
M74LS197P	74LS197
M74LS221P	74LS221
M74LS240P	74LS240
M74LS241P	74LS241
M74LS242P	74LS242
M74LS243P	74LS243
M74LS244P	74LS244
M74LS245	74LS245
M74LS245P	74LS245
M74LS247P	74LS247
M74LS257AP	74LS257
M74LS258AP	74LS258
M74LS259P	74LS259
M74LS273P	74LS273
M74LS279P	74LS279
M74LS280P	74LS280
M74LS283P	74LS283
M74LS290N	74LS290
M74LS290P	74LS290
M74LS293P	74LS293
M74LS295	74LS295A
M74LS298P	74LS298
M74LS365AP	74LS365A
M74LS366AP	74LS366A
M74LS367AP	74LS367
M74LS368AP	74LS368
M74LS373P	74LS373
M74LS374P	74LS374
M74LS377P	74LS377
M74LS393P	74LS393
M74LS395AP	74LS395A
M74LS670P	74LS670
M76	160
M77	160
M78	160
M78A	160
M78B	160
M78BLK	160
M78C	160
M78D	160
M78GRN	160
M78RED	160
M78YEL	160
M82	125
M84	104
M84B	121
M91	107
M91A	123AP
M91A01	116
M91A02	116
M91A03	116
M91A06	125
M91B	123AP
M91BGRN	123AP
M91C	123AP
M91CM624	123AP
M91D	123AP
M91E	123AP
M91F	123AP
M91FM624	123AP
M95	109
M97-1.5A	8098
M97-1A	8098
M100	133
M100J	116
M102	125
M108	102A
M115R	116
M115S	116
M115SC	116(2)
M124J779-1	116
M128-J422PT.1	120
M128-J753	120
M128J422-1	120
M128J753	120
M135	138A
M135-1A	8139
M135-3A	8139
M140-1	107
M140-3	123AP
M145-1A	8149
M147-2A	8149
M147-4A	8149
M147-5A	8149
M150	116
M150-1	177
M153-200	5633
M153-300	5634
M153-400	5635
M153-500	5636
M153-600	5637
M154-200	5633
M154-300	5634
M154-400	5635
M154-500	5636
M154-600	5637
M165-200	5633
M165-400	5635
M166-200	5633
M166-400	5635
M172A	116
M204B	116
M300-1300A	128
M351	160
M401	161
M433	172A
M446	159
M447	123AP
M484	123AP
M500	116
M500A	116
M500B	116
M500C	116
M501	121
M511-035-0001	923
M530	128
M546	161
M604	166
M604HT	116
M612	161
M613	161
M614	161
M644	159
M650	6240
M652/PIC	106
M652P1C	129
M652PIC	129
M670	116
M670A	116

PART NUMBER	NTE REPLACEMENT
M670B	116
M670C	116
M671	123AP
M680	116
M680A	116
M680B	116
M680C	116
M690	116
M690A	116
M690B	116
M690C	116
M700	116
M700A	116
M700B	116
M700C	116
M701B	116
M702	125
M702B	125
M702C	116
M710	116
M710A	116
M710B	116
M710C	116
M720	125
M720A	125
M720B	125
M720C	125
M726	269
M730	125
M730A	125
M730B	125
M730C	125
M758	136A
M773	123AP
M773RED	123AP
M774	123AP
M7740RN	123AP
M775	123AP
M775BRN	123AP
M776	123AP
M776GRN	123AP
M779	123A
M779BLU	123AP
M780	123A
M780WHT	123AP
M783	123AP
M783RED	123AP
M784	123AP
M784ORN	123AP
M785	123AP
M785YEL	123AP
M786	123A
M787	123A
M787BLU	123AP
M791	123AP
M813A	601
M818	123AP
M818WHT	123AP
M819	154
M822	123AP
M822A	123AP
M822A-BLU	123AP
M822B	123AP
M823	123AP
M823B	123AP
M823WHT	123AP
M827	123AP
M827BRN	123AP
M828	129
M828GRN	123AP
M829A	159
M829B	159
M829C	159
M829D	159
M829E	159
M829F	159
M833	159
M844	184
M847	123AP
M847BLK	123AP
M852	184
M906	272
M912	157
M924	123AP
M1152A	125
M1152RA	125
M1358P	749
M1391P	815
M1400-1	107
M2003	912
M2016	912
M2032	916
M2032-330	916
M2032-330-BA	916
M2102A	2102
M2102A-2	2102
M2102A-4	2102
M2102A-6	2102
M2128-20	2128
M2164	4164
M2207	5071A
M2497	116
M2716	2716
M2716F1	2716
M2732A	2732A
M2732A-2F1	2732A
M2732AF1	2732A
M2764	2764
M2764-4	2764
M3016	116
M3519	123AP
M3567-2	184
M3764-15RS	4164
M3764-20RS	4164
M4015B	4015B
M4050BP	4050B
M4052BP	4052B
M4066BP	4066B
M4313	102A
M4315	102A
M4327	102
M4331	121
M4363	126
M4363BLU	126
M4363GRN	126
M4363ORN	126
M4363WHT	126
M4364	126
M4365	126
M4366	126
M4367	126
M4368	126
M4388	126
M4389	100
M4398	102A
M4439	160
M4442	159
M4450	158
M4454	126
M4456	126
M4457	126
M4459	127
M4462	102A
M4463	104
M4464	123AP
M4465	123AP
M4466	102A
M4466ORN	158
M4468	102A
M4468BRN	158
M4469	102A
M4469RED	158
M4470	102A
M4470ORN	158
M4471	102A
M4471YEL	158
M4472	102A
M4472GRN	158
M4473	158
M4474	102A
M4474YEL	158
M4475	102A
M4475GRN	158
M4476	102A
M4476BLU	158
M4477	102A
M4477PUR	158
M4478	129
M4482	102
M4483	102
M4484	160
M4485	160
M4486	160
M4501	126
M4504	160
M4506	160
M4507	160
M4509	126
M4510	158
M4524	160
M4525	159
M4526	160
M4545	126
M4545BLU	126
M4545WHT	126
M4552	144A
M4553	102A
M4553BLU	102A
M4553BRN	102A
M4553GRN	102A
M4553ORN	102A
M4553PUR	105
M4553RED	102A
M4553YEL	102A
M4562	158
M4563	102A
M4564	102A
M4565	102A
M4567	102
M4570	104
M4573	102A
M4582	121
M4582BRN	121
M4583	121
M4583RED	121
M4584	121
M4584GRN	121
M4586	126
M4589	126
M4590	159
M4594	123AP
M4595	102A
M4596	102
M4597	102
M4597GRN	102
M4597RED	102
M4603	126
M4604	126
M4605	126
M4605RED	126
M4606	121
M4607	102
M4608	121
M4619	104
M4619RED	121
M4620	104
M4620GRN	121
M4621	126
M4622	105
M4623	5335
M4624	123AP
M4627	102
M4630	123AP
M4632	126
M4640	179
M4640P	179
M4648	154
M4649	104
M4652	127
M4653	139A
M4659	144A
M4663	147A
M4689	128
M4697	160
M4699	150A
M4700	101
M4701	179
M4702	179
M4704	150A
M4705	123AP
M4706	123AP
M4709	108
M4714	123AP
M4715	130
M4722	121
M4722BLU	121
M4722GRN	121
M4722PUR	121
M4722RED	121
M4722YEL	121
M4727	104
M4728	151A
M4730	121
M4732	123AP
M4733	108
M4734	123AP
M4736	116
M4737	123AP
M4739	123AP
M4745	159
M4746	107
M4756	161
M4757	107
M4765	123AP
M4766	121
M4767	121
M4768	123AP
M4789	107
M4815	159
M4815D	159
M4816	139A
M4819	154
M4820	108
M4821	123AP
M4825	107
M4826	108
M4834	123AP
M4837	108
M4838	154
M4839	154
M4840	123AP
M4840A	107
M4841	123AP
M4842	123AP
M4842A	123AP
M4842C	123AP
M4843	154
M4844	123AP
M4845	108
M4850	141A
M4851	141A
M4852	123AP
M4853	154
M4854	123AP
M4855	108
M4857	108
M4858	147A
M4860	160
M4872	124
M4882	130
M4885	124
M4887A	104
M4888	121
M4888A	121
M4888B	121
M4898	123AP
M4900	162
M4901	163A
M4904	107
M4906	123AP
M4910	106
M4917	113A
M4918	128
M4919	128
M4920	124
M4926	123AP
M4927	154
M4933	123AP
M4935	123AP
M4936	175
M4937	123AP
M4937(3RD IF)	233
M4941	123AP
M4943	159
M4952	123AP
M4953	123AP
M4970	123AP
M4974	104
M4974/P1R	104
M4989	159
M4995	163A
M4998	157
M5060TB200	5335
M5060TB400	5335
M5060TB600	5335
M5106	1097
M5106P	1097
M5108	1099
M5108-9170	1099
M5108P	1099
M5112	1098
M5112Y	1098
M5113	704
M5113T	704
M5115	1110
M5115P	1110
M5115P-9085	1110
M5115PA	1110
M5115PR	1156
M5115RP	1156
M5117L	1301
M5131P	1096
M5134	1096
M5134-8266	1096
M5134P	1096
M5135	1004
M5135P	1004
M5141T	941
M5143	712
M5143P	712
M5144BP	712
M5144P	712
M5146P	1308
M5152	1170
M5152L	1170
M5155P	1126
M5169	747
M5169P	747
M5183	749
M5183-8098	749
M5183P	749
M5186	1430
M5186AP	1430
M5186BP	1430
M5186P	1430
M5190	738
M5190P	738
M5191P	1050
M5193	1297
M5193P	1297
M5195	1298
M5195P	1298
M5218L	778S
M5233P	943M
M5278L05	977
M5278L-05	977
M5285	102A
M5304	7460
M5304P	7460
M5310	7430
M5310P	7430
M5323P	7443
M5352	7450
M5352P	7450
M5362	7442
M5362P	7442
M5372	7472
M5372P	7472
M5374	7474
M5374P	7474
M5375	7470
M5375P	7470
M5395	7495
M5395P	7495
M5930	9930
M5930P	9930
M5932	9932
M5932P	9932
M5933	9933
M5933P	9933
M5935	9935
M5935P	9935
M5936	9936
M5936P	9936
M5937	9937
M5937P	9937
M5944	9944
M5944P	9944
M5945	9945
M5945P	9945
M5946	9946
M5946P	9946
M5948	9948
M5948P	9948
M5949	9949
M5949P	9949
M5953	9093
M5953P	9093
M5955P	9097
M5956	9094
M5956P	9094
M5961	9961
M5961P	9961
M5962	9962
M5962P	9962
M5963	9963
M5963P	9963
M6931	159
M7002	154
M7003	123AP
M7006	123AP
M7014	123
M7015	123AP
M7031	121
M7033	123AP
M7108	123AP
M7108/A5N	123AP
M7109	123AP
M7109/A5P	123AP
M7127	159
M7127/P2S	159
M7171	123AP
M7310	197
M7342	127
M7342/P4F	127
M7476	191
M7511	163A
M7543-1	130
M7611AP	1297
M7641	7473
M7644BP	1547
M8014	614
M8014(TRANS)	100
M8062A	102A
M8062B	102A
M8062C	102A
M8105	123AP
M8116	126
M8120	101
M8124	160
M8221	123AP
M8222	116
M8399	116
M8482	112
M8482C	112
M8482F	112
M8482FA-4	112
M8489	177
M8489-A	109
M8489A	177
M8513	601
M8513-0	601
M8513A	601
M8513A0	601
M8513A-0	601
M8513A-R	601
M8513A0	601
M8513R	601
M8569	178MP
M8604	102A
M8604A	102A
M8640	158
M8640A	158
M8640E	126
M8640E(C-M)	177
M8640E(DIODE)	177
M8640E(TRANS)	158
M9002	158
M9010	108
M9032	107
M9090	127
M9092	103
M9093	103
M9095	123AP
M9134	186
M9135	179
M9138	128
M9141	121
M9142	121
M9145	129
M9148	102
M9159	123AP
M9170	128
M9177	176
M9181	179
M9184	128
M9197	199
M9198	102A
M9202	121
M9206	116
M9209	128
M9221	128
M9225	175
M9226	123AP
M9228	128
M9235	116
M9237	121
M9241	121
M9244	130
M9248	123AP
M9249	102A
M9250	102
M9251	105
M9255	121
M9256	6401
M9257	129
M9259	130
M9263	121
M9264	6400
M9265	198
M9266	161
M9269	199
M9274	175
M9278	130
M9282	123
M9286	198
M9287	124
M9293	199
M9301	175
M9302	130
M9306	314
M9307	159
M9308	129
M9309	175
M9312	116
M9314	116
M9316	175
M9317	116
M9319	116
M9320	198
M9321	130
M9329	199
M9334	159
M9338	199
M9342	121
M9344	180
M9348	153
M9359	180
M9380	128
M9384	199
M9389	289
M9393	175
M9400	129
M9408	162
M9409	199
M9412	234
M9416	199
M9426	129
M9432	129
M9435	129
M9436	121
M9447	199
M9450	161
M9465	198
M9467	234
M9474	199
M9475	102A
M9480	181
M9481	161
M9482	108
M9486	199
M9491	128
M9514	159
M9515	130
M9519	128
M9520	129
M9521	192
M9525	123AP
M9526	159
M9527	159
M9531	159
M9532	123AP
M9536	225
M9547	199
M9550	121
M9556	184
M9561	128
M9562	128
M9563	123AP
M9568	123AP
M9570	123AP
M9571	159
M9575	108
M9576	152
M9582	184
M9591	128
M9594	199
M9595	102A
M9599	311
M9610	175
M9618	184
M9628	181
M9631	128
M9639	181
M9640	188
M9641	189
M9643	159
M9647	153
M9649	159
M9653	457
M9661	152
M9676	196
M9676/NPN	196
M9677	197
M9677/PNP	197
M9701	197
M9703	128
M9715	181
M9776	161
M9911	180
M27128	21128
M27128-3	21128
M27128-25	21128
M27128-30	21128
M27128A	21128
M27128A-2F1	21128
M27128AF1	21128
M31001	123AP
M33611	5011A
M41032A	125
M41223-2	116
M50100TB200	5338
M50100TB400	5338
M50100TB600	5338
M51011	1432
M51011P	1432
M51124	1098
M51144	1438
M51144L	1438
M51171L	1301
M51172	1436
M51172P	1436
M51182L	1467
M51204	1434
M51204L	1434
M51307	1846
M51307BSP	1846
M51354AP	1656
M51354AP0	1656
M51354P	1656
M51356P	1656
M51358P	1545
M51365	7015
M51365P	7015
M51365SP	85
M51366	1847
M51366P	1847
M51366SP	1847
M51375	1418
M51375P	1418
M51376	7014
M51376BSP	7014
M51389P	1437
M51516	1361
M51516L	1361
M51518	1362
M51518L	1362
M51521L	1659
M51544L	1517
M51709T	909
M51841P	955M
M51848L	955S
M51848P	955M
M51903L	1510
M53200	7400
M53200P	7400
M53201	7401
M53201P	7401
M53202	7402
M53202P	7402
M53203	7403
M53203P	7403
M53204	7404
M53204P	7404
M53205	7405
M53205P	7405
M53206P	7406
M53210	7410
M53210P	7410
M53216P	7416
M53217P	7417
M53220	7420
M53220P	7420
M53230	7430
M53230P	7430
M53237P	7437
M53238P	7438
M53240	7440
M53240P	7440
M53241	7441
M53241P	7441
M53242	7442
M53242P	7442
M53243	7443
M53244	7444
M53244P	7444
M53245P	7445
M53247	7447
M53247P	7447
M53248	7448
M53248A	7448
M53248P	7448
M53250	7450
M53250P	7450
M53253	7453
M53253P	7453
M53260	7460
M53260P	7460
M53270	7470
M53270P	7470
M53272	7472
M53272P	7472
M53273	7473
M53273P	7473
M53274	7474
M53274P	7474
M53275	7475
M53275P	7475
M53276	7476
M53276P	7476
M53280	7480
M53280P	7480
M53283	7483
M53283P	7483
M53286	7486
M53286P	7486
M53290	7490
M53290P	7490
M53291	7491
M53291P	7491
M53292	7492
M53292P	7492
M53293	7493A
M53293P	7493A
M53295	7495
M53295P	7495
M53296	7496
M53296P	7496
M53307	74107
M53307P	74107
M53321	74121
M53321P	74121
M53345P	74145
M53351	74151
M53351P	74151
M53380	74180
M53380P	74180
M53392	74192
M53392P	74192
M53393	74193
M53393P	74193
M54459	1745
M54459L	1745
M54516P	2084
M54517P	2079
M54519P	2079
M54521P	2078
M54523	2013

PART NUMBER	NTE REPLACEMENT
M54523P	2013
M54524	2011
M54524P	2011
M54525	2012
M54525P	2012
M54526	2014
M54526P	2014
M54527P	2083
M54528P	2076
M54529P	2075
M54530P	2074
M54531P	2074
M54533P	2073
M54534P	2072
M54535	2071
M54536P	2070
M54543L	1628
M54543L-B	1628
M54543LB	1628
M58472P	7473
M58478	1581
M58478P	1581
M58485	1738
M58485P	1738
M58732S	2708
M58732S-1	2708
M75205-1	5870
M75205-2	5871
M75516-2	160
M75516-2P	160
M75516-2R	160
M75517-1	102A
M75517-2	102A
M75537-2	176
M75543-1	152
M75545-1	161
M75547-1	108
M75547-2	108
M75549-2	130
M75561-7	102A
M75561-8	129
M75561-17	129
M75561-23	221
M75561-23RN	221
M75565-1	123
M105064	120
M109474	113A
M755162-P	160
M755162-R	160
M8534992	113A
M8534992-2	113A
M73260900	960
M73260901	966
M74260912	7407
M74260913	74LS27
M74260914	74LS125A
M74260941	74LS00
M74260979	74LS86
M80260957	5111A
M96260960	159
M96260961	123AP
M-0027	116
M-2	113A
M-31	116
M-128J509-1	161
M-128J510-1	107
M-128J511-3	161
M-204B	116
M-433	172A
M-1002-2	123AP
M-1002-17 NC	123AP
M-1002-17-NC	123AP
M-4721	123AP
M-8124	112
M-8489A	177
M-8513A	601
M-8513R	601
M-8641	123AP
M-8641A	158
M-75517-1	102
M-75536-1	128
M-75536-2	128
M-75543-1	175
M-75557-1	123AP
M-75557-2	123AP
M-75557-3	123AP
M-75557-4	123AP
M-75557-5	123AP
M-75557-6	123AP
M-P3D	102
M.KIM,I-/U	109
MA0401	106
MA0402	106
MA0404	159
MA0404-1	106
MA0404-2	106
MA0411	106
MA0412	294
MA0413	106
MA0414	159
MA1	160
MA2	116
MA3	109
MA3.0EB	5004A
MA8	109
MA10	172A
MA15DTA	519
MA23	102A
MA23(B)	109
MA23A	160
MA23B	102A
MA25	102A
MA25A	109
MA26	601
MA26A	177
MA26G	605A
MA26T	605A
MA26T0	605A
MA26T0-A	601
MA26T0-B	605A
MA26T0A	605A
MA26T0B	605A
MA26TA	605A
MA26T0-A	605A
MA26T0/A	605A
MA26W	605A
MA26W0	605A
MA26W0B	605A
MA26WA	605A
MA26WD	605A
MA26WO	605A
MA26WO-B	605A
MA27	605A
MA27-B	605A
MA27A	605A
MA27B	605A
MA27T	605A
MA27T-A	605A
MA27T-B	605A
MA27TA	605A
MA27TB	605A
MA27TBTA	605A
MA27W	605A
MA27W-B	605A
MA27WA	605A
MA27WATA	605A
MA27WB	605A
MA50	116
MA51A	109
MA55	109
MA56	519
MA57	519
MA62	6408
MA90	109
MA100	100
MA101	116
MA102	116
MA105	519
MA110	116
MA111	552
MA112	158
MA113	158
MA114	158
MA115	158
MA116	158
MA117	158
MA150	177
MA150(L)-T2	5024A
MA150DD	519
MA150LF	519
MA150TA	519
MA150TA5	177
MA150TP	519
MA150WK	519
MA151A	519
MA151K	593
MA151K(MH)	593
MA151WA	596
MA151WA(MN)	596
MA151WK	595
MA152K	593
MA152WA	596
MA152WK	595
MA152WK(MU)	595
MA152WK-TX	595
MA152WKTX	595
MA154	519
MA154WA	519 N1
MA154WK	519 N2
MA156	519 N3
MA161	177
MA161C	519
MA161TA	519
MA161TA5	519
MA162	519
MA162A	519
MA162LF	519
MA162TA5	519
MA162TP	519
MA165	519
MA165-T2	519
MA165-Y	519
MA165TA	519
MA165TA5	519
MA165TA5-VT	519
MA166	519
MA166(C)	519
MA166C	519
MA167	519
MA170	519
MA171	519
MA171TA5	519
MA178	519
MA182	552
MA185	552
MA203	116
MA206	102A
MA211	116
MA215	116
MA240	102A
MA242	116
MA242C	116
MA242RC	156
MA260	605A
MA277-B	605A
MA286	100
MA287	100
MA288	100
MA311	614
MA320B2	612
MA320G1NR	612
MA325	616P
MA325B	616P
MA325G	616P
MA340	610
MA350	116
MA351	116
MA393	102A
MA393A	102A
MA393B	102A
MA393C	102A
MA393E	102A
MA393G	102A
MA393R	102A
MA433	112
MA650	6240
MA661	6246
MA700	584
MA700A	584
MA767	722
MA767PC	722
MA790	109
MA815	102A
MA856	519
MA856TV	519
MA858	519
MA881	102A
MA882	102A
MA883	102A
MA884	102A
MA885	102A
MA886	102A
MA887	102A
MA888	102A
MA889	102A
MA890	102A
MA891	102A
MA892	102A
MA893	102A
MA894	102A
MA895	102A
MA896	102A
MA897	102A
MA898	102A
MA899	102A
MA900	102A
MA901	102A
MA902	102A
MA903	102A
MA904	102A
MA909	102A
MA910	102A
MA1028L	5003A
MA1030	5004A
MA1030M	5004A
MA1033	5005A
MA1033L	5005A
MA1036	5006A
MA1039L	5007A
MA1043M	5008A
MA1047	5069A
MA1047A	5009A
MA1047H	5009A
MA1051	5010A
MA1051M	5010T1
MA1051TP	5010A
MA1056	136A
MA1056M	136A
MA1062	5013A
MA1062H	5013A
MA1062LF	5013A
MA1062LM	5013A
MA1062M	5013A
MA1064A	5014A
MA1068	5014A
MA1068H	5014A
MA1068L	5014A
MA1068T	5014A
MA1075	5015A
MA1075TA	5015A
MA1082	5072A
MA1082L	5016A
MA1091	5018A
MA1100	140A
MA1100M	5019T1
MA1110	5020A
MA1110(D10DE)	552
MA1110M	5020A
MA1110TA	5020A
MA1120	5021A
MA1120-L	5021A
MA1120L	5021A
MA1130	5022A
MA1130LF	5022A
MA1130MH	5022A
MA1150	5024A
MA1150A	5024A
MA1150TA	5024A
MA1160	5075A
MA1200	5029A
MA1220	5080A
MA1240	5081A
MA1270H	5033A
MA1300M	5035A
MA1318	102A
MA1501TP	5010A
MA1700	102
MA1702	158
MA1703	158
MA1704	158
MA1705	126
MA1706	158
MA1707	158
MA1708	158
MA2100B	140A
MA2160B	5075A
MA2180	5077A
MA2650-A	601
MA3065	712
MA4027M	5033A
MA4030-M	5004A
MA4030M	5004A
MA4043-H	5008A
MA4047	5009A
MA4047(H)	5009A
MA4047(H)-Y	5009A
MA4047(M)	5009A
MA4047(M)-Y	5009A
MA4047-H	5009A
MA4047H	5009A
MA4047L	5009A
MA4047M	5009A
MA4047MTA	5009A
MA4051	5010A
MA4051(M)	5010A
MA4051(M)-T2	5010A
MA4051H	5010A
MA4051LM	5010A
MA4051M	5010A
MA4051MTA	5010A
MA4051N-M	5010T1
MA4056	5011A
MA4056(M)	5011A
MA4056(M)-T2	5011A
MA4056(M)-Y	5011A
MA4056-M	5011A
MA4056-Y	5011A
MA4056M	5011A
MA4056M-Y	5011A
MA4062	5013A
MA4062(L)	5021T1
MA4062(M)	5021T1
MA4062(M)-Y	5021T1
MA4062-L	5013A
MA4062-Y	5021T1
MA4062H	5013A
MA4062HTA	5013A
MA4062L	5012A
MA4062M	5021T1
MA4062M-Y	5021T1
MA4068	5014A
MA4068(L)-T2	5014A
MA4068(L)-Y	5014A
MA4068(M)	5014A
MA4068(M)-T2	5014A
MA4068(N)	5014A
MA4068(N)C1-T2	5014A
MA4068(N)C1-Y	5014A
MA4068(N)V1	5014A
MA4068(N)V1-Y	5014A
MA4068-M	5014A
MA4068-MM	5014A
MA4068-Y	5014A
MA4068H	5014A
MA4068L	5014A
MA4068L-Y	5014A
MA4068M	5014A
MA4068M-Y	5014A
MA4068N	5014A
MA4068NV1-Y	5014A
MA4068V1-Y	5014A
MA4075-H	5015A
MA4075H	5015A
MA4082	5016A
MA4082-H	5016A
MA4082-M	5016A
MA4082M	5016A
MA4091	5018A
MA4091(M)	5018A
MA4091(M)-Y	5018A
MA4091-L	5018A
MA4091-M	5018A
MA4091L	5018A
MA4091M	5018A
MA4091M-Y	5018A
MA4091N-L	5018A
MA4091N-M	5018A
MA4100	5019A
MA4100(M)	5019A
MA4100(M)-T2	5019A
MA4100(M)-Y	5019A
MA4100-H	5019A
MA4100H	5019A
MA4100M	5019A
MA4100M-Y	5019A
MA4100N	5019A
MA4101	229
MA4103	229
MA4104	229
MA4110	5020A
MA4110-L	5020A
MA4110-M	5020A
MA4110TA	5020A
MA4120	5021A
MA4120(M)	5021A
MA4120(M)-T2	5021A
MA4120(M)-Y	5021A
MA4120-H	5021A
MA4120H	5021A
MA4120M	5021T1
MA4120M-Y	5021A
MA4120Y	5021A
MA4130	5022A
MA4130(H)	5021T1
MA4130(H)-T2	5021T1
MA4130H	5022A
MA4130L	5022A
MA4130M	5022A
MA4150	5024A
MA4150(L)-T2	5024A
MA4150(L)-Y	5024A
MA4150(M)	5024A
MA4150(M)-Y	5024A
MA4150-M	5024A
MA4150-Y	5024A
MA4150L	5024A
MA4150L-Y	5024A
MA4150M	5024A
MA4160	5025A
MA4160-M	5025A
MA4160M	5025A
MA4180M	5027A
MA4200	5029A
MA4200-M	5029A
MA4220H	5030A
MA4270	5033A
MA4270(M)	146A
MA4270(M)-Y	5033A
MA4270-H	5035A
MA4270M	146A
MA4270Y	5033A
MA4300M	5035A
MA4330	5036A
MA4330(L)	5036A
MA4330(L)-Y	5036A
MA4330(M)	5036A
MA4330(M)-T2	5036A
MA4330(M)-Y	5036A
MA4330-Y	5036A
MA4330M	5036A
MA4330M-Y	5036A
MA4501	5010A
MA4670	121
MA5113	726
MA6001	123AP
MA6002	123AP
MA6003	123AP
MA6101	235
MA6102	235
MA6301	1120
MA6301T	1120
MA8001	293
MA9426	123AP
MA23100B	140A
MA51355P	1004
MA-10	172A
MA-23B	109
MA-25A	177
MA-26	601
MA-26-1	116
MA-110	116
MA-165	519
MA-900	109
MA-4062	5021T1
MA-4062(L)	5021T1
MA-4062(M)-Y	5021T1
MA-4062-Y	5021T1
MA-4062L	5021T1
MA-4062M-Y	5021T1
MA-4330-Y	5036A
MA-4330M	5036A
MA-4330M-Y	5036A
MAC10-1	5611
MAC10-3	5613
MAC10-4	5614
MAC10-7	5617
MAC10-8	5618
MAC11-1	5621
MAC11-2	5622
MAC11-3	5623
MAC11-7	5627
MAC11-8	5637
MAC11-32	5623
MAC15-3	56004
MAC15-4	56004
MAC15-5	56006
MAC15-6	56006
MAC15-7	56008
MAC15-8	56008
MAC15-9	56010
MAC15-10	56010
MAC15A3	56004
MAC15A4	56004
MAC15A5	56006
MAC15A6	56006
MAC15A7	56008
MAC15A8	56008
MAC15A9	56010
MAC15A10	56010
MAC15A-4	56004
MAC15A-6	56006
MAC15A-8	56008
MAC15A-10	56010
MAC25-4	56014
MAC25-5	56014
MAC25-6	56014
MAC25A4	56014
MAC25A5	56014
MAC25A6	56014
MAC25A-6	56014
MAC35-1	5688
MAC35-2	5688
MAC35-3	5688
MAC35-4	5688
MAC35-5	5689
MAC35-6	5689
MAC35-7	5690
MAC35-8	5690
MAC36-1	5680
MAC36-2	5681
MAC36-3	5682
MAC36-4	5683
MAC36-5	5684
MAC36-6	5685
MAC36-7	5686
MAC36-8	5687
MAC37-1	5688
MAC37-2	5686
MAC37-3	5688
MAC37-4	5688
MAC37-5	5689
MAC37-6	5689
MAC37-7	5690
MAC77-1	5600
MAC77-2	5601
MAC77-3	5602
MAC77-4	5603
MAC77-5	5604
MAC77-6	5605
MAC77-7	5606
MAC77-8	5607
MAC94-4	5655
MAC94A4	5655
MAC95-4	5655
MAC95-5	5656
MAC95-6	5656
MAC95-8	5657
MAC95A5	5656
MAC218-3	5608
MAC218-4	5608
MAC218-4FP	5620
MAC218-5	5608
MAC218-6	5608
MAC218-6FP	5620
MAC218-7	5609
MAC218-8	5609
MAC218-8FP	5620
MAC218-9	5610
MAC218-10	5610
MAC218-10FP	5620
MAC218A3	5608
MAC218A4	5608
MAC218A4FP	5620
MAC218A5	5608
MAC218A6	5608
MAC218A6FP	5620
MAC218A7	5609
MAC218A8	5609
MAC218A8FP	5620
MAC218A9	5610
MAC218A10	5610
MAC218A10FP	5620
MAC223-3	56015
MAC223-4	56015
MAC223-4FP	5699
MAC223-5	56016
MAC223-6	56016
MAC223-6FP	5699
MAC223-7	56017
MAC223-8	56017
MAC223-8FP	5699
MAC223-9	56018
MAC223-10	56018
MAC223-10FP	5699
MAC223A4FP	5699
MAC223A6FP	5699
MAC223A8FP	5699
MAC223A10FP	5699
MAC223A-3	56015
MAC223A-4	56015
MAC223A-5	56016
MAC223A-6	56016
MAC223A-7	56017
MAC223A-8	56017
MAC223A-9	56018
MAC223A-10	56018
MAC224-4	56028
MAC224-5	56028
MAC224-6	56028
MAC224-7	56028
MAC224-8	56028
MAC224-9	56028
MAC224-10	56028
MAC224A-4	56028
MAC224A-5	56028
MAC224A-6	56028
MAC224A-7	56028
MAC224A-8	56028
MAC224A-9	56028
MAC224A-10	56028
MAC228-2	5608
MAC228-3	5608
MAC228-4	5608
MAC228-5	5608
MAC228-6	5608
MAC228-7	5609
MAC228-8	5609
MAC228-9	5610
MAC228-10	5610
MAC228A2	5608
MAC228A3	5608
MAC228A4	5608
MAC228A5	5608
MAC228A6	5608
MAC228A7	5609
MAC228A8	5609
MAC228A9	5610
MAC228A10	5610
MAC228A-6	5608
MAC228A-8	5609
MAC228A-10	5610
MAC320-4FP	5671
MAC320-6FP	5671
MAC320-8FP	5671
MAC320A10FP	5671
MAC515-4	5679
MAC515-5	5679
MAC515-6	5679
MAC515-7	5679
MAC515-8	5679
MAC525-4	5679
MAC525-5	5679
MAC525-6	5679
MAC525-7	5679
MAC525-8	5679
MAC3010-4	5605
MAC3010-8	5608
MAC3010-15	56006
MAC3010-40	5695
MAC3010-40I	56024
MAC3020-4	5605
MAC3020-8	5608
MAC3020-15	56006
MAC3020-40	5695
MAC3020-40I	56024
MAC3030-4	5605
MAC3030-8	5608
MAC3030-15	56006
MAC3030-40	5695
MAC3030-40I	56024
MAC3040-4	5605
MAC3040-8	5608
MAC3040-15	56006
MAC3040-40	5695
MAC3040-40I	56024
MAC5569	5673
MAC5570	5675
MAC5573	5673
MAC5574	5675
MAC40688	56022
MAC40689	56024
MAC40690	56026
MAC40798	5677
MAN1	3050
MAN1A	3050
MAN10A	3050
MAN51A	3054
MAN52A	3063
MAN54A	3059
MAN61A	3054
MAN71A	3052
MAN72A	3061
MAN73A	3065
MAN74A	3056
MAN81A	3055
MAN82A	3064
MAN84A	3060
MAN101	3051
MAN101A	3051
MAN1001	3051
MAN1001A	3051
MAN3410	3054
MAN3410A	3054
MAN3610A	3053
MAN3620A	3062
MAN3640A	3058
MAN4610A	3070
MAN4640A	3071
MAN4710A	3068
MAN4740A	3069
MAN6710	3074
MAN6730	3076
MAN6740	3075
MAN6750	3077
MAN6760	3078
MAN6780	3079
MAN8610	3080
MAQ7786	123AP
MAS20	126
MAS21	126
MAS22	126
MAS23	126
MAS26T0	605A
MB01	116
MB1F	525
MB11A01V05	5304
MB11A01V20	5304
MB11A01V40	5304
MB11A01V60	5305
MB11A01V80	5306
MB11A02V05	5312
MB11A02V10	5312
MB11A02V20	5313
MB11A02V30	5314
MB11A02V40	5314
MB11A02V60	5315
MB11A02V80	5316
MB11A02W10	5317
MB11A06V05	5312
MB11A06V10	5312
MB11A06V20	5313
MB11A06V30	5314
MB11A06V40	5314
MB11A06V60	5315
MB11A06W10	5317
MB11A01V10	5304
MB12A25V60	5326
MB12A35V05	5340
MB12A35V20	5340
MB12A35V30	5342
MB12A35V40	5342
MB12A35V60	5342
MB12A35V80	5344
MB54	5314

PART NUMBER	NTE REPLACEMENT
MB74LS00	74LS00
MB74LS00M	74LS00
MB74LS02	74LS02
MB74LS02M	74LS02
MB74LS03	74LS03
MB74LS03M	74LS03
MB74LS04	74LS04
MB74LS04M	74LS04
MB74LS05	74LS05
MB74LS05M	74LS05
MB74LS08	74LS08
MB74LS08M	74LS08
MB74LS09	74LS09
MB74LS09M	74LS09
MB74LS10	74LS10
MB74LS10M	74LS10
MB74LS11	74LS11
MB74LS11M	74LS11
MB74LS14	74LS14
MB74LS20	74LS20
MB74LS20M	74LS20
MB74LS27	74LS27
MB74LS27M	74LS27
MB74LS30	74LS30
MB74LS30M	74LS30
MB74LS32	74LS32
MB74LS32M	74LS32
MB74LS38	74LS38
MB74LS38M	74LS38
MB74LS42	74LS42
MB74LS42M	74LS42
MB74LS47	74LS47
MB74LS47M	74LS47
MB74LS48	74LS48
MB74LS48M	74LS48
MB74LS49	74LS49
MB74LS49M	74LS49
MB74LS51	74LS51
MB74LS51M	74LS51
MB74LS74A	74LS74A
MB74LS74AM	74LS74A
MB74LS78A	74LS78
MB74LS78AM	74LS78
MB74LS83A	74LS83A
MB74LS83AM	74LS83A
MB74LS85	74LS85
MB74LS85M	74LS85
MB74LS86	74LS86
MB74LS86M	74LS86
MB74LS86P	74LS86
MB74LS92	74LS92
MB74LS92M	74LS92
MB74LS107	74LS107
MB74LS107M	74LS107
MB74LS113	74LS113
MB74LS113M	74LS113
MB74LS114	74LS114
MB74LS114M	74LS114
MB74LS123	74LS123
MB74LS126A	74LS126A
MB74LS126AM	74LS126A
MB74LS136	74LS136
MB74LS136M	74LS136
MB74LS138	74LS138
MB74LS138M	74LS138
MB74LS139	74LS139
MB74LS156	74LS156
MB74LS156M	74LS156
MB74LS158	74LS158
MB74LS158M	74LS158
MB74LS161A	74LS161A
MB74LS161AM	74LS161A
MB74LS163A	74LS163A
MB74LS163AM	74LS163A
MB74LS174	74LS174
MB74LS174M	74LS174
MB74LS175	74LS175
MB74LS175M	74LS175
MB74LS191	74LS191
MB74LS191M	74LS191
MB74LS193	74LS193
MB74LS193M	74LS193
MB74LS244	74LS244
MB74LS244M	74LS244
MB74LS247	74LS247
MB74LS247M	74LS247
MB74LS248	74LS248
MB74LS248M	74LS248
MB74LS249	74LS249
MB74LS249M	74LS249
MB74LS258	74LS258
MB74LS266	74LS266
MB74LS266M	74LS266
MB74LS273M	74LS273
MB74LS280	74LS280
MB74LS280M	74LS280
MB74LS283	74LS283
MB74LS283M	74LS283
MB74LS290	74LS290
MB74LS290M	74LS290
MB74LS293	74LS293
MB74LS293M	74LS293
MB74LS365	74LS365A
MB74LS365M	74LS365A
MB74LS367A	74LS367
MB74LS373	74LS373
MB74LS373P	74LS373
MB74LS374	74LS374
MB74LS374A	74LS374
MB74LS374AM	74LS374
MB74S00	74S00
MB74S38	74S38
MB81	5312
MB81G	5312
MB82	5313
MB82G	5313
MB84G	5314
MB86	5315
MB86G	5315
MB88	5316
MB88G	5316
MB151	5322
MB151W	5322W
MB152	5322
MB152W	5322W
MB154	5324
MB154W	5324W
MB156	5326
MB156W	5326W
MB158	5327
MB158W	5327W
MB244	116
MB251	5322
MB251W	5322W
MB252	5322
MB252W	5322W
MB254	5324
MB254W	5324W
MB256	5326
MB256W	5326W
MB257	116
MB258	5327
MB258W	5327W
MB269	116
MB270	116
MB400	7400
MB401	7410
MB402	7420
MB403	7430
MB404	7440
MB405	7450
MB406	7460
MB407	7472
MB408	7480
MB410	74107
MB411	7453
MB416	7401
MB417	7402
MB418	7404
MB420	7474
MB433	7438
MB434	7438
MB435	7437
MB442	7442
MB443	74145
MB445	74151
MB447	74180
MB448	7485
MB449	7486
MB452	7496
MB453	7495
MB454	7491
MB455	74198
MB456	74191
MB457	74190
MB458	74181
MB459	74182
MB460	74170
MB513AR	177
MB601	7400
MB602	7410
MB603	7420
MB604	7430
MB605	7440
MB606	7450
MB607	7460
MB609	7472
MB613	74H53
MB614	74H21
MB618	74H78
MB805	5312
MB805G	5312
MB1106V80	5316
MB1212A35V10	5340
MB1505	5322
MB1505W	5322W
MB1510	5328
MB1510W	5328W
MB2505	5322
MB2505W	5322W
MB2510	5328
MB2510W	5328W
MB3202	1082
MB3614	987
MB3710	1242
MB3712	1423
MB3713	1424
MB3722	1368
MB3756	1271
MB4204	834
MB4204C	834
MB6356	5072A
MB8128-15	2128
MB8264	4164
MB8264-15	4164
MB8264-20	4164
MB8516	2716
MB8518	2708
MB8518E	2708
MB8518H	2708
MB81256	4256
MB81256-10	4256
MB81256-15	21256
MB84001B	4001B
MB84011	4011B
MB84011-U	4011B
MB84011B	4011B
MB84011M	4011B
MB84011U	4011B
MB84011V	4001B
MB84016M	4016B
MB84019B	4019B
MB84025B	4025B
MB84027B	4027B
MB84028B	4028B
MB84051B	4051B
MB84055	4055B
MB84066BM	4066B
MB84520B	4520B
MB-1D	525
MB-1F	558
MB-1FS	558
MB-81	5312
MB-82	5313
MB-84	5314
MB-86	5315
MB-88	5316
MB-810	5317
MBAS16	593
MBAV70	595
MBAW56	596
MBC149C	123AP
MBD101	112
MBL6821N	6821
MBM2732	2732A
MBM2732-35	2732A
MBM2732-45	2732A
MBM2732A	2732A
MBM2732A-20	2732A
MBM2732A-25	2732A
MBM2732A-30	2732A
MBM2732A-35	2732A
MBM2732A-35X	2732A
MBM2764-20	2764
MBM2764-25	2764
MBM2764-30	2764
MBM27128	21128
MBM27128-25	21128
MBM27128-30	21128
MBP2545CT	6087
MBR115P	585
MBR120P	585
MBR130P	585
MBR140P	585
MBR190	578
MBR390	579
MBR1520	6084
MBR1530	6084
MBR1535	6084
MBR1535CT	6087
MBR1540	6084
MBR1545CT	6087
MBR2035CT	6087
MBR2045CT	6087
MBR2520	6084
MBR2530	6084
MBR2535	6084
MBR2540	6084
MBR2545CT	6087
MBR3035PT	6090
MBR3045PT	6090
MBR3520	6084
MBR3535	6084
MBR3545	6084
MBR4020	6094
MBR4030	6094
MBR4035	6094
MBR4040	6094
MBR6020	6094
MBR6035	6094
MBR6045	6094
MBS4991	6403
MC010	116
MC020	116
MC020A	116
MC030	116
MC030A	116
MC030B	116
MC040	116
MC040A	116
MC070	125
MC070A	125
MC080	125
MC080A	125
MC090	125
MC090A	125
MC015	116
MC021	116
MC021A	116
MC022	116
MC022A	116
MC023	116
MC023A	116
MC025	116
MC035	116
MC2	177
MC4-484B-2	3023
MC8T26AP	6880
MC8T28P	6889
MC8T95	6885
MC8T95P	6885
MC8T96	6886
MC8T96P	6886
MC8T97	6887
MC8T97P	6887
MC8T98	6888
MC8T98P	6888
MC19	116
MC74H74AF	74H74
MC74H74AL	74H74
MC74H74P	74H74
MC74H87F	74H87
MC74H87L	74H87
MC74H87P	74H87
MC78L05	977
MC78L05,CP	977
MC78L05ACP	977
MC78L05C	977
MC78L05CP	977
MC78L08ACP	981
MC78L08CP	981
MC78L12ACP	950
MC78L12CP	950
MC78L15ACP	951
MC78L15CP	951
MC78L18ACP	1906
MC78L18C	1906
MC78L18CP	1906
MC78L24	1908
MC78L24AC	1908
MC78L24ACP	1908
MC78L24C	1908
MC78L24CP	1908
MC78LAC	1906
MC78M05CT	960
MC78M06CT	962
MC78M08CT	964
MC78M12	966
MC78M12CT	966
MC78M15CT	968
MC78M18CT	958
MC78M24CT	972
MC78T12CK	1912
MC78T12CT	966
MC78T12K	1912
MC78T15CK	1918
MC78T15K	1918
MC79L05	1917
MC79L05ACP	1917
MC79L05CP	1917
MC79L12AC	1903
MC79L12ACP	1903
MC79L12CP	1903
MC79L15ACP	1905
MC79L15CP	1905
MC79L18ACP	1907
MC79L18CP	1907
MC79L24	1909
MC79L24ACP	1909
MC79L24P	1909
MC100	125
MC100A	156
MC101	160
MC103	160
MC170	116
MC201	614
MC301	553
MC303P	74H73
MC308	109
MC456	116
MC660P	9660
MC661P	9661
MC664P	9664
MC666P	9666
MC668P	9668
MC669P	9669
MC670P	9670
MC671P	9671
MC672	9672
MC672P	9672
MC675P	9675
MC680P	9680
MC680PC	9680
MC681P	9681
MC682P	9682
MC689P	9689
MC724P	9924
MC789	9989
MC789P	9989
MC800	190
MC804	177
MC824P	9924
MC830L	9930
MC830P	9930
MC832L	9932
MC832P	9932
MC833L	9933
MC833P	9933
MC835L	9935
MC835P	9935
MC836L	9936
MC836P	9936
MC837	9937
MC837L	9937
MC837P	9937
MC840L	9935
MC840P	9935
MC844L	9944
MC844P	9944
MC845L	9945
MC845P	9945
MC846L	9946
MC846P	9946
MC848L	9948
MC848P	9948
MC849L	9949
MC849P	9949
MC850L	9950
MC850P	9950
MC851L	9951
MC851P	9951
MC852L	9099
MC852P	9099
MC853L	9093
MC853P	9093
MC855L	9097
MC855P	9097
MC856L	9094
MC856P	9094
MC857L	9157
MC857P	9157
MC858L	9158
MC858P	9158
MC861L	9961
MC861P	9961
MC862L	9962
MC862P	9962
MC863L	9963
MC863P	9963
MC889P	9989
MC921	519
MC1303	725
MC1303L	725
MC1303P	725
MC1306P	745
MC1307	722
MC1307P	722
MC1307PQ	722
MC1309P	1226
MC1310	801
MC1310A	801
MC1310P	801
MC1311	743
MC1311P	743
MC1312P	799
MC1314	704
MC1314G	704
MC1324P	739
MC1326	739
MC1326P	739
MC1326PQ	739
MC1330	747
MC1330A	747
MC1330A2P	747
MC1330P	747
MC1339P	721
MC1339PQ	721
MC1350	746
MC1350P	746
MC1350PQ	746
MC1351	748
MC1351P	748
MC1352	749
MC1352P	749
MC1352PQ	749
MC1353P	1080
MC1353PQ	1080
MC1355	750
MC1355P	750
MC1355PQ	750
MC1357	708
MC1357A	708
MC1357P	708
MC1357PQ	708
MC1358	712
MC1358C	712
MC1358P	712
MC1358PQ	712
MC1364	783
MC1364G	780
MC1364P	783
MC1364PQ	783
MC1370P	714
MC1370PQ	714
MC1372	855
MC1372P	855
MC1373	856
MC1373P	856
MC1375P	723
MC1375PQ	723
MC1389P	788
MC1391	815
MC1391P	815
MC1394	836
MC1394P	836
MC1398	738
MC1398P	738
MC1398PQ	738
MC1399	835
MC1399P	835
MC1405BCP	4053B
MC1408	2056
MC1408B	4081B
MC1408P	2056
MC1411	2011
MC1411P	2011
MC1412	2012
MC1412P	2012
MC1413	2013
MC1413P	2013
MC1416	2014
MC1416P	2014
MC1455	955M
MC1455CP1	955M
MC1455D	955SM
MC1455P	955M
MC1455P1	955M
MC1458	778A
MC1458C	778A
MC1458CP	778A
MC1458CP1	778A
MC1458P	778A
MC1458P1	778A
MC1458V	778A
MC1468L	921
MC1485BCP	4585B
MC1488	75188
MC1488/75188N	75188
MC1488CL	75188
MC1488CP	75188
MC1488F	75188
MC1488J	75188
MC1488L	75188
MC1488N	75188
MC1488P	75188
MC1488PD	75188
MC1489	75189
MC1489A	75189
MC1489AP	75189
MC1489CL	75189
MC1489CP	75189
MC1489F	75189
MC1489J	75189
MC1489L	75189
MC1489N	75189
MC1489P	75189
MC1496	973
MC1496A	973D
MC1496G	973
MC1496K	973
MC1496N	973D
MC1496P	973D
MC1520	116
MC1521	116
MC1522	116
MC1523	116
MC1524	116
MC1527	125
MC1528	125
MC1529	125
MC1558P	778A
MC1568L	921
MC1709CG	909
MC1709CP1	909
MC1709CP2	909D
MC1709P2	909D
MC1710CG	910
MC1710CL	910D
MC1710CP2	910D
MC1710P2	910D
MC1711CG	911
MC1723CG	923
MC1723CL	923D
MC1723CP	923D
MC1723G	923
MC1733CD	927SM
MC1733CG	927
MC1733CP	927D
MC1733G	927
MC1741	941
MC1741C2P	941D
MC1741CD	941SM
MC1741CG	941
MC1741CL	941D
MC1741CP	941M
MC1741CP1	941M
MC1741CP2	941D
MC1741G	941
MC1741P1	941M
MC1747CG	947
MC1747CL	947D
MC1747CP	947D
MC1747CP2	947D
MC1747G	947
MC1748CP	975
MC1776CP	888M
MC1800P	9800
MC1801P	9801
MC1802P	9802
MC1803P	9803
MC1804P	9804
MC1805P	9805
MC1806P	9806
MC1807	9807
MC1807P	9807
MC1808P	9808
MC1809P	9809
MC1810P	9810
MC1811P	9811
MC1812L	9812
MC1812P	9812
MC1814P	9814
MC1938	738
MC2315-3	5482
MC2326	177
MC2526	109
MC3000L	74H00
MC3000P	74H00
MC3001	1192
MC3001L	74H08
MC3001P	74H08
MC3004L	74H01
MC3004P	74H01
MC3005L	74H10
MC3005P	74H10
MC3006L	74H11
MC3006P	74H11
MC3008L	74H04
MC3008P	74H04
MC3009L	74H05
MC3009P	74H05
MC3010L	74H20
MC3010P	74H20
MC3011L	74H21
MC3011P	74H21
MC3012L	74H22
MC3012P	74H22
MC3016L	74H30
MC3016P	74H30
MC3018L	74H62
MC3018P	74H62
MC3019L	74H61
MC3019P	74H61
MC3020L	74H50
MC3020P	74H50
MC3023L	74H51
MC3023P	74H51
MC3024L	74H40
MC3024P	74H40
MC3030L	74H60
MC3030P	74H60
MC3031L	74H52
MC3031P	74H52
MC3032L	74H53
MC3032P	74H53
MC3033L	74H54
MC3033P	74H54
MC3034L	74H55
MC3034P	74H55
MC3054L	74H71
MC3054P	74H71
MC3055L	74H72
MC3055P	74H72
MC3061P	74S114
MC3062P	74S113
MC3063L	74H73
MC3301P	992
MC3302	834
MC3302P	834
MC3340	829
MC3340P	829
MC3340PA	829
MC3346P	912
MC3357	853
MC3357P	853
MC3359P	860
MC3373	1714M
MC3386P	912
MC3401	992
MC3401P	992
MC3456D	978SM
MC3456P	978
MC3458G	877
MC3470	3470
MC3470AP	3470
MC3470N	3470
MC3470P	3470
MC3479	1857
MC3479P	1857
MC3491P	2030
MC3492	2030
MC3492P	2030
MC3494	2031
MC3494P	2031
MC4044	974
MC4044CP	974
MC4044P	974
MC4080	1083
MC4080-1	1083
MC4080-2	1083
MC4080-3	1083
MC4344	974
MC4558	778A
MC4558ACP1	778A
MC4558CD	778SM
MC4558CP	778A
MC4558CP1	778A
MC4558FP	778SM
MC4558NCP1	778A
MC5321	177
MC6007	136A
MC6007A	136A
MC6008	137A
MC6008A	137A
MC6014	140A
MC6014A	140A
MC6016	142A
MC6016A	142A
MC6018	145A
MC6018A	145A
MC6024	146A
MC6024A	146A
MC6026	147A
MC6026A	147A
MC6107	136A
MC6107A	136A
MC6108	137A
MC6108A	137A
MC6116	142A
MC6116A	142A
MC6118	145A
MC6118A	145A
MC6124	146A
MC6124A	146A
MC6126	147A
MC6126A	147A
MC6800	6800
MC6800CP	6800
MC6800P	6800
MC6802	6802
MC6802CP	6802
MC6802P	6802
MC6809	6809
MC6809E	6809E
MC6809EP	6809E
MC6809P	6809
MC6810	6810
MC6810AP	6810
MC6820	6821
MC6821	6821
MC6821CP	6821
MC6821P	6821
MC6850	6850
MC6850L	6850
MC6850P	6850
MC6860	6860
MC6860P	6860
MC6880	6880

PART NUMBER	NTE REPLACEMENT
MC6880AP	6880
MC6885	6885
MC6885P	6885
MC6886	6886
MC6886P	6886
MC6887	6887
MC6887P	6887
MC6888	6888
MC6888P	6888
MC6889	6889
MC6889P	6889
MC7400	7400
MC7400F	7400
MC7400L	7400
MC7400N	7400
MC7400P	7400
MC7401F	7401
MC7401L	7401
MC7401P	7401
MC7402F	7402
MC7402L	7402
MC7402P	7402
MC7403L	7403
MC7403P	7403
MC7404L	7404
MC7404P	7404
MC7405L	7405
MC7405P	7405
MC7406L	7406
MC7406P	7406
MC7407L	7407
MC7407P	7407
MC7408L	7408
MC7408P	7408
MC7409L	7409
MC7409P	7409
MC7410F	7410
MC7410L	7410
MC7410P	7410
MC7416L	7416
MC7416P	7416
MC7417L	7417
MC7417P	7417
MC7420F	7420
MC7420L	7420
MC7420P	7420
MC7426L	7426
MC7426P	7426
MC7430F	7430
MC7430L	7430
MC7430P	7430
MC7437F	7437
MC7437L	7437
MC7437P	7437
MC7438F	7438
MC7438L	7438
MC7438P	7438
MC7440F	7440
MC7440L	7440
MC7440P	7440
MC7441AL	7441
MC7441AP	7441
MC7442L	7442
MC7442P	7442
MC7443L	7443
MC7443P	7443
MC7444L	7444
MC7444P	7444
MC7445L	7445
MC7445P	7445
MC7446L	7446
MC7446P	7446
MC7447L	7447
MC7447P	7447
MC7448L	7448
MC7448P	7448
MC7450F	7450
MC7450L	7450
MC7450P	7450
MC7451F	7451
MC7451L	7451
MC7451P	7451
MC7453F	7453
MC7453L	7453
MC7453P	7453
MC7454F	7454
MC7454L	7454
MC7454P	7454
MC7460F	7460
MC7460L	7460
MC7460P	7460
MC7470L	7470
MC7470P	7470
MC7472F	7472
MC7472L	7472
MC7472P	7472
MC7473F	7473
MC7473L	7473
MC7473P	7473
MC7475L	7475
MC7475P	7475
MC7476L	7476
MC7476P	7476
MC7480L	7480
MC7480P	7480
MC7483L	7483
MC7483P	7483
MC7486F	7486
MC7486L	7486
MC7486P	7486
MC7490F	7490
MC7490L	7490
MC7490P	7490
MC7491AL	7491
MC7491AP	7491
MC7492F	7492
MC7492L	7492
MC7492P	7492
MC7493F	7493A
MC7493L	7493A
MC7493P	7493A
MC7494L	7494
MC7494P	7494
MC7495L	7495
MC7495P	7495
MC7496L	7496
MC7496P	7496
MC7497	7497
MC7805	960
MC7805C	960
MC7805CK	931
MC7805CP	960
MC7805CT	960
MC7806CP	962
MC7806CT	962
MC7808	964
MC7808C	964
MC7808CP	964
MC7808CT	964
MC7812AC	966
MC7812C	966
MC7812CK	1914
MC7812CP	966
MC7812CT	966
MC7812K	1914
MC7815	968
MC7815CK	1916
MC7815CP	968
MC7815CT	968
MC7815K	1916
MC7818CK	1920
MC7818CP	958
MC7818CT	958
MC7818GT	958
MC7818K	1920
MC7824CK	1924
MC7824CP	972
MC7824CT	972
MC7824K	1924
MC7905C	961
MC7905CK	1913
MC7905CP	961
MC7905CT	961
MC7906CP	963
MC7906CT	963
MC7908CP	965
MC7908CT	965
MC7908GT	965
MC7912CK	1915
MC7912CP	967
MC7912CT	967
MC7915CK	1919
MC7915CP	969
MC7915CT	969
MC7918CK	1923
MC7918CP	959
MC7918CT	959
MC7918GT	959
MC7924ACK	1925
MC7924CK	1925
MC7924CP	971
MC7924CT	971
MC8328L	8328
MC8328P	8328
MC9328L	8328
MC9427	123AP
MC14000	4000
MC14000UBCP	4000
MC14001	4001B
MC14001B	4001B
MC14001BCP	4001B
MC14001BP	4001B
MC14001CP	4001B
MC14002	4002B
MC14002AE	4002B
MC14002B	4002B
MC14002BCP	4002B
MC14002CP	4002B
MC14006BCP	4006B
MC14007UBCP	4007
MC14009	4009
MC14011	4011B
MC14011B	4011B
MC14011BCP	4011B
MC14011CP	4011B
MC14012	4012B
MC14012B	4012B
MC14012BCP	4012B
MC14012CP	4012B
MC14012PC	4012B
MC14013	4013B
MC14013B	4013B
MC14013BCP	4013B
MC14013CP	4013B
MC14014BCP	4014B
MC14014CP	4014B
MC14015	4015B
MC14015B	4015B
MC14015BCP	4015B
MC14015CP	4015B
MC14016	4016B
MC14016B	4016B
MC14016BCP	4016B
MC14016CP	4016B
MC14017	4017B
MC14017BCP	4017B
MC14017CP	4017B
MC14018BCP	4018B
MC14020	4020B
MC14020B	4020B
MC14020BCP	4020B
MC14020BPC	4020B
MC14020CP	4020B
MC14021	4021B
MC14021BCP	4021B
MC14021CP	4021B
MC14022BCP	4022B
MC14023	4023B
MC14023B	4023B
MC14023BCP	4023B
MC14023CP	4023B
MC14023PC	4022B
MC14024	4024B
MC14024B	4024B
MC14024CP	4024B
MC14025	4025B
MC14025B	4025B
MC14025BCP	4025B
MC14025CP	4025B
MC14027	4027B
MC14027B	4027B
MC14027BCP	4027B
MC14027CP	4027B
MC14028B	4028B
MC14028BCP	4028B
MC14028CP	4028B
MC14029BCP	4029B
MC14029CP	4029B
MC14030B	4030B
MC14031B	4031B
MC14032BCP	4032B
MC14033B	4033B
MC14034B	4034B
MC14034BCP	4034B
MC14035BCP	4035B
MC14038BCP	4038B
MC14040	4040B
MC14040B	4040B
MC14040BCP	4040B
MC14040CP	4040B
MC14042	4042B
MC14042B	4042B
MC14042BCP	4042B
MC14042CP	4042B
MC14043B	4043B
MC14043BCP	4043B
MC14044B	4044B
MC14044BCL	4044B
MC14044BCP	4044B
MC14046B	4046B
MC14046BCP	4046B
MC14049	4049
MC14049UB	4049
MC14049UBCP	4049
MC14050	4050B
MC14050B	4050B
MC14050BCP	4050B
MC14050CP	4050B
MC14051	4051B
MC14051B	4051B
MC14051BCP	4051B
MC14052	4052B
MC14052B	4052B
MC14052BCP	4052B
MC14053	4053B
MC14053B	4053B
MC14053BCP	4053B
MC14060B	4060B
MC14060BCP	4060B
MC14066	4066B
MC14066B	4066B
MC14066BCP	4066B
MC14067BCP	4067B
MC14068B	4068B
MC14068BCP	4068B
MC14069B	4069
MC14069U	4069
MC14069UB	4069
MC14069UBCP	4069
MC14070B	4070B
MC14070BCP	4070B
MC14071B	4071B
MC14071BCP	4071B
MC14071CP	4071B
MC14072BCP	4072B
MC14073B	4073B
MC14073BCP	4073B
MC14075B	4075B
MC14075BCP	4075B
MC14076BCP	4076B
MC14077BCP	4077B
MC14078B	4078B
MC14078BCP	4078B
MC14081	4081B
MC14081B	4081B
MC14081BCP	4081B
MC14081CP	4081B
MC14082B	4082B
MC14082BCP	4082B
MC14093B	4093B
MC14093BCP	4093B
MC14094B	4094B
MC14094BCP	4094B
MC14097BCP	4097B
MC14098B	4098B
MC14099	4099B
MC14099B	4099B
MC14099BCP	4099B
MC14160B	40160B
MC14160BCP	40160B
MC14161BCP	40161B
MC14162BCP	40162B
MC14163BCP	40163B
MC14174B	40174B
MC14174BCP	40174B
MC14175BCP	40175B
MC14194B	40194B
MC14194BCP	40194B
MC14412	2047
MC14412FP	2047
MC14412VP	2047
MC14433	2055
MC14433P	2055
MC14501UB	4501
MC14501UBCL	4501
MC14501UBCP	4501
MC14502B	4502B
MC14502BCP	4502B
MC14503B	40097B
MC14503BCL	80C97
MC14503BCP	4503B
MC14508BCP	4508B
MC14510BCP	4510B
MC14511	4511B
MC14511B	4511B
MC14511BCP	4511B
MC14511L	4511B
MC14512B	4512B
MC14512BCP	4512B
MC14512CP	4512B
MC14513B	4513B
MC14513BCP	4513B
MC14514B	4514B
MC14514BCP	4514B
MC14515B	4515B
MC14515BCP	4515B
MC14516B	4516B
MC14516BCP	4516B
MC14517B	4517B
MC14517BCP	4517B
MC14518	4518B
MC14518B	4518B
MC14518BCP	4518B
MC14518CP	4518B
MC14520B	4520B
MC14520BCP	4520B
MC14520BP	4520B
MC14520CP	4520B
MC14521B	4521B
MC14521BCL	4521B
MC14521BCP	4521B
MC14522B	4522B
MC14522BCP	4522B
MC14526B	4096B
MC14526BCP	4526B
MC14527B	4527B
MC14527BCP	4527B
MC14527CP	4527B
MC14528	4528B
MC14528B	4528B
MC14528BCP	4528B
MC14529B	4529B
MC14529BCP	4529B
MC14530B	4539B
MC14531B	4531B
MC14531BCP	4531B
MC14532B	4532B
MC14532BCL	4532B
MC14532BCP	4532B
MC14536B	4536B
MC14536BCP	4536B
MC14538B	4538B
MC14538BCP	4538B
MC14539BCP	4539B
MC14539CP	4539B
MC14541	4541B
MC14541B	4541B
MC14541BCL	4541B
MC14541BCP	4541B
MC14543	4543B
MC14543B	4543B
MC14543BCP	4543B
MC14547B	4547B
MC14547BCL	4547B
MC14547BCP	4547B
MC14551B	4551B
MC14551BCL	4551B
MC14551BCP	4551B
MC14553	4553B
MC14555BCP	4555B
MC14555CP	4555B
MC14556B	4556B
MC14556BCP	4556B
MC14556CP	4556B
MC14558BCP	4558B
MC14566B	4566B
MC14566BCP	4566B
MC14569B	4569B
MC14583BCL	4583B
MC14583BCP	4583B
MC14584B	4584B
MC14584BCP	4584B
MC14585	4585B
MC14585B	4585B
MC14597	4597B
MC14597B	4597B
MC14597BCP	4597B
MC14598	4598B
MC14598B	4598B
MC14598BCP	4598B
MC34004P	859
MC34060	1753
MC34060P	1753
MC34065	1765
MC34065P	1765
MC40803	1083
MC74100	74100
MC74107P	74107
MC74121P	74121
MC74122	74122
MC74123	74123
MC74141	74141
MC74145P	74145
MC74150P	74150
MC74151	74151
MC74152P	74152
MC74153P	74153
MC74155P	74155
MC74156P	74156
MC74157	74157
MC74160	74160
MC74161	74161
MC74162	74162
MC74163	74163
MC74164AP	74164
MC74165P	74165
MC74175	74175
MC74176P	74176
MC74177P	74177
MC74180P	74180
MC74181P	74181
MC74182P	74182
MC74190	74190
MC74191	74191
MC74192P	74192
MC74193P	74193
MC74195P	74195
MC74196	74196
MC74197	74197
MC75450	75450B
MC75450P	75450B
MC75451	75451B
MC75451P	75451B
MC75452P1	75452B
MC75453P	75453B
MC75454P	75454B
MC75491P	75491B
MC75492P	75492B
MC145109	1167
MC145409	1692
MC-301	177
MC-858	9158
MC-1307-P	722
MC-1310P	801
MC-1312P	799
MC-1356P	708
MC-1364	783
MC-1375P	723
MC-7402	7402
MC-14011CP	4011B
MCA8	3101
MCA81	3101
MCA230	3083
MCA231	3083
MCA255	3084
MCM2114	2114
MCM2114P20	2114
MCM2114P30	2114
MCM2114P45	2114
MCM2532	2532
MCM2532C	2532
MCM2708C	2708
MCM2708L	2708
MCM2716C	2716
MCM2716L	2716
MCM4002L	4002B
MCM4002P	4002B
MCM4027	2104
MCM4027A	2104
MCM4027AC3	2104
MCM4027AC4	2104
MCM4116B	2117
MCM4116BP20	2117
MCM4116BP25	2117
MCM4116BP30	2117
MCM4116BP35	2117
MCM4516	4516B
MCM5101	65101
MCM6256	4256
MCM6256-10	4256
MCM6256-15	21256
MCM6605A	2107
MCM6605A-2	2107
MCM6664-25	4164
MCM6665	4164
MCM6665-15	4164
MCM6665-20	4164
MCM6665A	4164
MCM6665AP15	4164
MCM6665AP20	4164
MCM6665AP25	4164
MCM6665B	4164
MCM6665B-15	4164
MCM6665B-20	4164
MCM6665BP	4164
MCM6665BP15	4164
MCM6665BP20	4164
MCM6665BP-15	4164
MCM6665BP-20	4164
MCM6810L-1	6810
MCM6810P	6810
MCP3009	3047
MCP3010	3047
MCP3011	3047
MCP3020	3048
MCP3021	3048
MCP3030	3049
MCP3031	3049
MCP3040	3097
MCP3041	3097
MCR72-1	5437
MCR72-2	5437
MCR72-3	5437
MCR72-4	5437
MCR72-5	5437
MCR72-6	5437
MCR72-7	5438
MCR72-8	5438
MCR100-3	5402
MCR100-4	5404
MCR100-5	5405
MCR100-6	5405
MCR100-7	5406
MCR100-8	5406
MCR101	5400
MCR102	5400
MCR103	5401
MCR104	5402
MCR106-1	5411
MCR106-2	5412
MCR106-3	5413
MCR106-4	5414
MCR106-5	5415
MCR106-6	5415
MCR106-7	5416
MCR106-8	5416
MCR107-1	5411
MCR107-2	5412
MCR107-3	5413
MCR107-4	5414
MCR115	5403
MCR120	5404
MCR218-2	5461
MCR218-3	5462
MCR218-4	5463
MCR218-5	5465
MCR218-6	5465
MCR218-7	5466
MCR218-8	5466
MCR218-9	5468
MCR218-10	5468
MCR264	5536
MCR264-2	5536
MCR264-3	5536
MCR264-4	5536
MCR264-6	5536
MCR264-8	5536
MCR264-10	5536
MCR649AP-1	314
MCR649AP-2	314
MCR649AP-3	314
MCR649AP-4	314
MCR649AP-5	314
MCR649AP-6	314
MCR649AP-7	314
MCR1308-2	5562
MCR1907-1	5545
MCR1907-2	5545
MCR1907-3	5545
MCR1907-4	5545
MCR1907-5	5545
MCR1907-6	5545
MCR2064-6	5494
MCR2315-1	5480
MCR2315-2	5481
MCR2315-4	5483
MCR2315-5	5484
MCR2315-6	5485
MCR2604-1	5494
MCR2604-2	5494
MCR2604-3	5494
MCR2604-4	5515
MCR2604-5	5515
MCR2604-6	5515
MCR2605-1	5494
MCR2605-2	5494
MCR2605-3	5494
MCR2605-4	5494
MCR2605-5	5494
MCR2605-6	5494
MCR2614L-4	5515
MCR2614L-5	5515
MCR2614L-6	5515
MCR2835-1	5517
MCR2835-2	5517
MCR2835-3	5517
MCR2835-4	5517
MCR2835-5	5518
MCR2835-7	5519
MCR2835-8	5519
MCR2918-1	5545
MCR2918-3	5545
MCR2918-5	5545
MCR3000-1	5442
MCR3000-2	5444
MCR3000-3	5444
MCR3000-4	5444
MCR3000-5	5446
MCR3000-6	5446
MCR3000-7	5448
MCR3000-8	5448
MCR3818-1	5514
MCR3818-2	5514
MCR3818-3	5514
MCR3818-4	5514
MCR3818-5	5515
MCR3818-6	5515
MCR3818-7	5516
MCR3818-8	5516
MCR3835-1	5517
MCR3835-2	5517
MCR3835-3	5517
MCR3835-4	5517
MCR3835-5	5518
MCR3835-6	5518
MCR3835-7	5519
MCR3835-8	5519
MCR3918-1	5520
MCR3918-2	5521
MCR3918-3	5522
MCR3918-4	5524
MCR3918-5	5526
MCR3918-6	5527
MCR3918-7	5528
MCR3918-8	5531
MCR3918-9	5531
MCR3935-1	5541
MCR3935-2	5541
MCR3935-3	5542
MCR3935-4	5543
MCR3935-5	5544
MCR3935-6	5545
MCR3935-7	5546
MCR3935-8	5547
MCS2	3046
MCS21	3091
MCS2135	194
MCS2137	194
MCS2400	3046
MCS2401	3091
MCS6532	6532
MCT2	3042
MCT2E	3042
MCT6	3086
MCT8	3100
MCT26	3040
MCT66	3086
MCT81	3100
MCT210	3041
MCT275	3043
MCT492P	7492
MCT-2E	3042
MCV	116
MCW89	2409
MD04	116
MD34	109
MD34A	109
MD46	109
MD60	109
MD60A	110MP
MD134	116
MD135	116
MD136	116
MD137	116
MD138	116
MD420	160
MD501	102A
MD501B	102A
MD604A	109
MD752	136A
MD752A	136A
MD753	137A
MD753A	137A
MD757	139A
MD757A	139A
MD759	142A
MD759A	142A
MD918	81
MD918A	81
MD918AF	81
MD918B	81
MD918BF	81
MD918F	81
MD984	82
MD1122	81
MD1126	81
MD1127	81
MD1129	81
MD1130	82
MD1131	81
MD1132	81
MD1488F	75188
MD2218	81
MD2218A	81
MD2219	81
MD2219A	81
MD2363B	81
MD2369A	81
MD2904	82
MD2904A	82
MD2905	82
MD3250	82
MD3250A	82
MD3251	82
MD3251A	82
MD3409	81
MD3410	81
MD4511BE	4511B
MD7000	81
MD7001	82
MD7002	81
MD7003	82
MD7812CT	966
MD8001	81
MD-34	109
MD-60A	109
MDA100A	166
MDA101A	166
MDA102A	167
MDA104	116
MDA104A	168
MDA106A	169
MDA108A	170
MDA110A	170
MDA200	166
MDA201	166
MDA202	167
MDA204	168

PART NUMBER	NTE REPLACEMENT
MDA206	169
MDA208	170
MDA210	170
MDA920-1	5332
MDA920-2	5332
MDA920-3	5332
MDA920-4	5332
MDA920-5	5332
MDA920-6	5332
MDA920-7	5332
MDA920A1	5304
MDA920A2	5304
MDA920A3	5304
MDA920A4	5304
MDA920A5	5304
MDA920A6	5304
MDA920A7	5305
MDA920A8	5306
MDA920A9	5307
MDA942A1	166
MDA942A2	167
MDA942A3	167
MDA942A5	168
MDA942A6	169
MDA942A7	170
MDA960-1	5312
MDA960-2	5312
MDA960-3	5313
MDA960-5	5314
MDA970A1	5309
MDA970A2	5309
MDA970A3	5310
MDA970A5	5310
MDA980-1	5322
MDA980-2	5322
MDA980-3	5322
MDA980-4	5324
MDA980-5	5324
MDA980-6	5326
MDA990-1	5322
MDA990-2	5322
MDA990-3	5322
MDA990-4	5324
MDA990-5	5324
MDA990-6	5326
MDA990-7	5327
MDA2501	5322
MDA2502	5322
MDA2506	5326
MDA2550	5322
MDA2551	5322
MDA3500	5340
MDA3501	5340
MDA3502	5340
MDA3504	5342
MDA3506	5342
MDA3508	5344
MDA3510	5344
MDA3550	5340
MDA9901	5322
MDA9902	5322
MDA9905	5324
MDA9906	5326
MDA-3500	5340
MDA-3501	5340
MDCZ8.2D	5072A
MDCZ8.2D10	5072A
MDCZ15110UT	524V15
MDCZ11510UL	524V15
MDCZ15110UL	524V15
MDCZA8.2D	5072A
MDCZA8.2D5	5072A
MDCZA8.2D10	5072A
MDCZB8.2D	5072A
MDCZB8.2D5	5072A
MDCZC8.2D5	5072A
MDCZC8.2D10	5072A
MDCZD8.2D	5072A
MDCZD8.2D5	5072A
MDCZD8.2D10	5072A
MDCZE8.2D	5072A
MDCZE8.2D5	5072A
MDCZE8.2D10	5072A
MDCZF8.2D	5072A
MDCZF8.2D5	5072A
MDCZF8.2D10	5072A
MDCZG8.2D	5072A
MDCZG8.2D5	5072A
MDCZG8.2D10	5072A
MDP173	177
MDS20	171
MDS21	296
MDS31	160
MDS32	160
MDS33	160
MDS33A	160
MDS33C	160
MDS33D	160
MDS34	160
MDS35	126
MDS36	160
MDS37	160
MDS38	160
MDS39	160
MDS40	160
MDS60	296
MDS1678	235
MDS6518	193
MDS9400	184
MDS9401	184
MDS9450	185
MDS9451	185
MDT50A06N	5712
MDT50A12N	5712
MDT65A06N	5712
MDT65A12N	5712
MDT95A06N	5722
MDT95A12N	5722
ME0401	106
ME0402	106
ME0404	159
ME0404-1	159
ME0404-2	159
ME0404A	290
ME0411	194
ME0412	290
ME0413	194
ME0414	194
ME0463	106
ME0475	194
ME213	123AP
ME213A	123AP
ME216	123AP
ME217	123AP
ME408-02C	5072A
ME409-02B	139A
ME501	159
ME502	159
ME503	106
ME511	106
ME512	106
ME513	193
ME900	123AP
ME900A	123AP
ME901	123AP
ME901A	123AP
ME1001	123AP
ME1002	123AP
ME1075	128
ME1100	194
ME1110	154
ME1120	154
ME1138	229
ME2001	123AP
ME2002	123AP
ME3002	107
ME3011	107
ME3440	198
ME4001	123AP
ME4002	123AP
ME4003	123AP
ME4003C	123AP
ME4101	123AP
ME4102	123AP
ME4103	123AP
ME4104	123AP
ME5001	108
ME5501	2011
ME5502	2012
ME5503	2013
ME5504	2014
ME6001	123AP
ME6002	123AP
ME6003	123AP
ME7021	3027
ME8001	128
ME8002	128
ME8003	128
ME8201	108
ME9001	123AP
ME9002	107
ME9003	229
ME9021	108
ME9022	107
ME32865-00001-B	784
ME-1	177
ME-2	123AP
ME-3	123AP
ME-4	177
ME-5	210
MEF-25	123AP
MEM554	222
MEM564C	222
MEM630	222
MEM680Y	222
MEM4001	4001B
MEM4011	4011B
MEM4013	4013B
MEM4016	4016B
MEM4050	4050B
MEM4051	4051B
MEN563C	465
ME0412	290
MER-65-L11324	519
MEX27T10	146A
MEZ1-3.3	5066A
MEZ1-3.6	134A
MEZ1-3.9	5067A
MEZ1-4.3	5068A
MEZ1-4.7	5069A
MEZ1-5.1	135A
MEZ1-5.6	136A
MEZ1-6.2	137A
MEZ1-6.8	5071A
MEZ1-7.5	138A
MEZ1-8.2	5072A
MEZ1-9.1	139A
MEZ1-10	140A
MEZ1-11	5074A
MEZ1-12G	142A
MEZ1-14	144A
MEZ1-15	145A
MEZ1-20	5079A
MEZ1-22	5080A
MEZ1-24	5081A
MEZ1-26	146A
MEZ1-27	146A
MEZ1-29	5084A
MEZ1-33G	147A
MEZ1-36	5085A
MEZ1-39	5087A
MEZ1-43	5087A
MEZ1-47	5088A
MEZ1-51	5089A
MEZ1-55	148A
MEZ1-56	5090A
MEZ1-62	149A
MEZ1-68	5092A
MEZ1-82	150A
MEZ1-91	5095A
MEZ1-110F	151A
MEZ1-115	141A
MEZ1-120	5097A
MEZ1-128	143A
MEZ1-130	5098A
MEZ1-140	5099A
MEZ1-150	5100A
MEZ1-160	5101A
MEZ1-162	5075A
MEZ1-170	5102A
MEZ1-178	5077A
MEZ1-180	5103A
MEZ1-190	5104A
MEZ1-200	5105A
MEZ1-200G	5105A
MEZ5.6T5	136A
MEZ5.6T10	136A
MEZ12T5	142A
MEZ12T10	142A
MEZ15T5	145A
MEZ15T10	145A
MEZ15T10C	145A
MEZ27T5	146A
MEZ27T5A	146A
MEZ27T10	146A
MEZ27T10A	146A
MEZ-15T5A	145A
MF15/1B	503
MF20/1B	503
MF20/16	503
MF25/1B	505
MF25/16	505
MF30/1B	504
MF521	133
MF1161	107
MF1162	107
MF1163	107
MF1164	107
MF3304	159
MF-15/1B	503
MF-30/16	504
MF-55-62	121
MFC4030	754
MFC4040	754
MFC6010	760
MFE121	222
MFE122	222
MFE130	222
MFE130-712	222
MFE131	222
MFE140	221
MFE201	454
MFE2000	452
MFE2001	452
MFE2093	133
MFE2094	133
MFE2095	133
MFE3004	221
MFE3005	221
MFE3006	222
MFE3007	222
MFE3008	222
MFP121	222
MG9623	123AP
MGLA8.2	5072A
MGLA8.2A	5072A
MGLA8.2B	5072A
MGLA39	134A
MGLA39A	134A
MGLA39B	134A
MGLA47	135A
MGLA47A	135A
MGLA47B	135A
MGLA51	135A
MGLA51A	135A
MGLA51B	135A
MGLA56	136A
MGLA56A	136A
MGLA56B	136A
MGLA62	137A
MGLA62A	137A
MGLA62B	137A
MGLA82	5072A
MGLA82A	5072A
MGLA82B	5072A
MGLA91	139A
MGLA91A	139A
MGLA91B	139A
MGLA100	140A
MGLA100A	140A
MGLA100B	140A
MH67	116
MH68	116
MH70	116
MH71	116
MH72	125
MH73	156
MH353	536A
MH353A	536A
MH353A01	536A
MH354	500A
MH383-B01	500A
MH383B01	500A
MH401	525
MH500	116
MH670	116
MH680	116
MH700	116
MH710	116
MH720	125
MH730	125
MH746	74LS249
MH913A01	522
MH914A01	500A
MH915A09	532
MH915A12	531
MH915A13	531
MH915C02	531
MH915C04	531
MH919D01	500A
MH920A01	500A
MH920A06	500A
MH920A07	500A
MH920A10	500A
MH920B01	521
MH931A01	522
MH931A04	522
MH931A07	522
MH932A01	500A
MH943A01	534
MH970A02	533
MH970A07	533
MH986J02	533
MH987J04	521
MH988A03	536A
MH988B03	536A
MH1002	522
MH1002A01	522
MH1011B01	539
MH1011C03	539
MH1011C06	539
MH1030A02	539
MH1031C01	539
MH1201	529
MH1201A01	529
MH1201A02	529
MH1201A03	535
MH1201A05	529
MH1201A06	535
MH1201A10	549
MH1201A12	557
MH1201A13	557
MH1201B01	529
MH1201B02	529
MH1201B03	529
MH1201C01	529
MH1201E01	529
MH1201G01	556
MH1203B01	523
MH1203B02	523
MH1203B03	523
MH1203B10	523
MH1203B13	523
MH1205A01	523
MH1206	530
MH1206A01	530
MH1207	530
MH1207A01	530
MH1209	530
MH1209H02	539
MH1220	530
MH1220A01	530
MH1221	523
MH1221A02	526A
MH1221E02	526A
MH1223-01	549
MH1501	192
MH1502	193
MH9410A	128
MH9460A	129
MH9623	123AP
MH9630	123AP
MH9830A01	522
MH-5-015-D	117
MH-983	522
MH-985	534
MH-987	500A
MH-1220	530
MH-1221	523
MH-1222	529
MH-OK0A	536A
MHD619	519
MHM1001	108
MHM1101	108
MHT180	105
MHT181	105
MHT230	105
MHT1802	105
MHT1803	105
MHT1804	105
MHT1807	105
MHT1808	105
MHT1809	105
MHT2002	101
MHT2003	101
MHT2004	101
MHT2008	101
MHT2009	101
MHT2010	101
MHT2305	105
MHT2414	128
MHT2418	128
MHT4401	128
MHT4402	154
MHT4411	128
MHT4412	128
MHT4413	128
MHT4414	198
MHT4415	198
MHT4416	198
MHT4417	198
MHT4418	198
MHT4419	198
MHT4451	128
MHT4452	190
MHT4453	171
MHT4454	171
MHT4483	128
MHT4511	128
MHT4512	128
MHT4513	128
MHT5001	171
MHT5002	171
MHT5003	171
MHT5004	171
MHT5005	171
MHT5501	224
MHT5506	224
MHT5511	224
MHT5901	175
MHT5906	152
MHT5911	175
MHT7206	162
MHT7207	162
MHT7208	162
MHT7209	163A
MHT7401	128
MHT7411	128
MHT7412	128
MHT7413	171
MHT7414	128
MHT7415	171
MHT7416	171
MHT7417	128
MHT7601	130
MHT7602	130
MHT7603	130
MHT7607	130
MHT7608	130
MHT7609	130
MHT9001	128
MHT9002	128
MHT9003	190
MHT9004	128
MHT9005	128
MHT9006	190
MHT9007	224
MHT9008	171
MHT9009	171
MHT9010	224
MHT18010	105
MHT-1802	105
MHT-1803	105
MHT-1804	105
MI15R	116
MI15RC	116(2)
MI15S	116
MI15SC	116(2)
MI151R	113A
MI152A	125
MI152RA	125
MI301	177
MI1546	108
MI9623	123AP
MI9630	123AP
MI-15MR	116
MI-15MS	116
MI-15R	116
MI-15S	116
MI-106	125
MI-106R	125
MI-152	125
MI-152A	125
MI-152R	125
MI-152RA	125
MI-155C	116
MI-301	177
MIC709-5(DIP)	909D
MIC709-5(METAL CAN)	909
MIC710-5(DIP)	910D
MIC710-5(METAL CAN)	910
MIC711-5(METAL CAN)	911
MIC723-5(DIP)	923D
MIC723-5(METAL CAN)	923
MIC741-5(DIP)	941D
MIC741-5(METAL CAN)	941
MIC930-5D	9930
MIC930-5P	9930
MIC932-5D	9932
MIC932-5P	9932
MIC933-5D	9933
MIC933-5P	9933
MIC935-5D	9935
MIC935-5P	9935
MIC936-5D	9936
MIC936-5P	9936
MIC937-5D	9937
MIC937-5P	9937
MIC944-5D	9944
MIC944-5P	9944
MIC945-5D	9945
MIC945-5P	9945
MIC946-5D	9946
MIC946-5P	9946
MIC948-5D	9948
MIC948-5P	9948
MIC949-5D	9949
MIC949-5P	9949
MIC950-5D	9950
MIC950-5P	9950
MIC951-5D	9951
MIC951-5P	9951
MIC961-5D	9961
MIC961-5P	9961
MIC962-5D	9962
MIC962-5P	9962
MIC963-5D	9963
MIC963-5P	9963
MIC7400J	7400
MIC7400N	7400
MIC7401J	7401
MIC7401N	7401
MIC7402J	7402
MIC7402N	7402
MIC7403J	7403
MIC7403N	7403
MIC7404J	7404
MIC7404N	7404
MIC7405J	7405
MIC7405N	7405
MIC7410J	7410
MIC7410N	7410
MIC7413J	7413
MIC7413N	7413
MIC7420J	7420
MIC7420N	7420
MIC7426J	7426
MIC7426N	7426
MIC7428J	7428
MIC7428N	7428
MIC7430J	7430
MIC7430N	7430
MIC7440J	7440
MIC7440N	7440
MIC7441AJ	7441
MIC7441AN	7441
MIC7442J	7442
MIC7442N	7442
MIC7443J	7443
MIC7443N	7443
MIC7444J	7444
MIC7444N	7444
MIC7445J	7445
MIC7445N	7445
MIC7450J	7450
MIC7450N	7450
MIC7451J	7451
MIC7451N	7451
MIC7453J	7453
MIC7453N	7453
MIC7454J	7454
MIC7454N	7454
MIC7460J	7460
MIC7460N	7460
MIC7470J	7470
MIC7470N	7470
MIC7472J	7472
MIC7472N	7472
MIC7473J	7473
MIC7473N	7473
MIC7474J	7474
MIC7474N	7474
MIC7475J	7475
MIC7475N	7475
MIC7476J	7476
MIC7476N	7476
MIC7482J	7482
MIC7482N	7482
MIC7483J	7483
MIC7483N	7483
MIC7486J	7486
MIC7486N	7486
MIC7490J	7490
MIC7490N	7490
MIC7491AJ	7491
MIC7491AN	7491
MIC7492J	7492
MIC7492N	7492
MIC7493J	7493A
MIC7493N	7493A
MIC7494J	7494
MIC7494N	7494
MIC7495J	7495
MIC7495N	7495
MIC7496J	7496
MIC9093-5D	9093
MIC9093-5P	9093
MIC9094-5D	9094
MIC9094-5P	9094
MIC9097-5D	9097
MIC9097-5P	9097
MIC9099-5D	9099
MIC9099-5P	9099
MIC74107J	7496
MIC74107N	74107
MIC74121J	74107
MIC74121N	74121
MIC74145J	74145
MIC74145N	74145
MIC74150J	74150
MIC74150N	74150
MIC74151J	74151
MIC74151N	74151
MIC74154J	74154
MIC74154N	74154
MIC74155J	74155
MIC74155N	74155
MIC74156J	74156
MIC74156N	74156
MIC74180J	74180
MIC74180N	74180
MIC77413J	7413
MIL31	3007
MIL32	3007
MIL38	3007
MILB51	3020
MIS13674/47	234
MIS14150-18	101
MIS14150/37	154
MIS-181C1-4	9932
MIS-14150-18A	101
MIS-18101-3	9930
MIS-18101-5	9945
MJ105	165
MJ139A	289
MJ400	124
MJ410	94
MJ411	94
MJ413	385
MJ420	154
MJ421	154
MJ423	385
MJ431	162
MJ432	283
MJ440	224
MJ450	180
MJ480	130
MJ481	130
MJ490	219
MJ491	180
MJ703N	703
MJ802	181
MJ900	244
MJ901	244
MJ1000	243
MJ1001	243
MJ1800	94
MJ2249	175
MJ2250	175
MJ2251	124
MJ2252	124
MJ2253	218
MJ2254	218
MJ2267	180
MJ2268	180
MJ2500	246
MJ2501	246
MJ2800	130
MJ2801	130
MJ2802	130
MJ2840	130
MJ2841	130
MJ2901	180
MJ2940	180
MJ2941	180
MJ2955	219
MJ2955A	219
MJ3000	245
MJ3001	245
MJ3010	162
MJ3011	163A
MJ3026	162
MJ3027	162
MJ3028	163A
MJ3029	283
MJ3030	283
MJ3040	97
MJ3101	175
MJ3201	124
MJ3202	124
MJ3430	385
MJ3521	245
MJ3701	218
MJ3771	181
MJ3772	181
MJ3773	388
MJ4000	243
MJ4001	243
MJ4010	244
MJ4011	244
MJ4030	250
MJ4031	250
MJ4032	250
MJ4033	249
MJ4034	249
MJ4035	249
MJ4101	175
MJ4102	175
MJ4237	281
MJ4247	280
MJ4502	180
MJ4645	397
MJ4646	397
MJ5202	175
MJ5203	175
MJ5204	175
MJ5257	181
MJ5602	284
MJ5603	284
MJ6002	284
MJ6257	181
MJ6302	284
MJ6700	96
MJ7160	162
MJ7161	162
MJ8400	165
MJ9000	283
MJ10000	98
MJ10001	98
MJ10002	97
MJ10003	97
MJ10004	98
MJ10004P	256
MJ10005	98
MJ10005P	256
MJ10006	97
MJ10007	97
MJ10008	98

PART NUMBER	NTE REPLACEMENT
MJ10009	98
MJ10012	98
MJ10015	99
MJ10022	99
MJ10023	99
MJ11011	2350
MJ11012	2349
MJ11013	2350
MJ11014	2349
MJ11015	2350
MJ11016	2349
MJ11028	2349
MJ11029	2350
MJ11030	2349
MJ11031	2350
MJ11032	2349
MJ11033	2350
MJ12002	389
MJ12003	389
MJ12004	389
MJ12005	238
MJ13014	385
MJ13015	2319
MJ13070	52
MJ13071	52
MJ13080	2319
MJ13081	2319
MJ13090	2319
MJ13091	2319
MJ13332	386
MJ13333	386
MJ13334	385
MJ13335	386
MJ15001	60
MJ15002	61
MJ15003	60
MJ15004	61
MJ15011	87
MJ15012	88
MJ15015	388
MJ15016	68
MJ15022	388
MJ15023	68
MJ15024	388
MJ15025	68
MJ15531	68
MJ15532	68
MJ16010	2319
MJ-900	244
MJ-2251	128
MJ-3010	162
MJE29	196
MJE29A	196
MJE29B	196
MJE30	197
MJE30A	197
MJE30B	197
MJE31	196
MJE31A	196
MJE31B	196
MJE32	197
MJE32A	197
MJE32B	197
MJE41	196
MJE41A	196
MJE41B	196
MJE42A	197
MJE42B	197
MJE51T	379
MJE52T	379
MJE53T	379
MJE101	153
MJE102	153
MJE103	153
MJE104	183
MJE105	183
MJE105K	242
MJE170	185
MJE171	185
MJE180	184
MJE181	184
MJE182	182
MJE200	184
MJE200E	184
MJE201	152
MJE202	152
MJE203	182
MJE204	182
MJE205	182
MJE205K	241
MJE210	185
MJE220	184
MJE221	184
MJE222	184
MJE223	184
MJE224	184
MJE225	184
MJE230	185
MJE231	185
MJE232	185
MJE233	185
MJE234	185
MJE235	185
MJE240	184
MJE241	184
MJE242	184
MJE250	185
MJE251	185
MJE252	185
MJE340	157
MJE340K	157
MJE341	157
MJE341K	157
MJE344	157
MJE344D	198
MJE344K	157
MJE345	171
MJE350	39
MJE370	185
MJE370K	242
MJE371	185
MJE371K	242
MJE423	162
MJE482	184
MJE483	184
MJE488	184
MJE492	185
MJE493	185
MJE520	184
MJE521	184
MJE521K	241
MJE700	254
MJE700T	262
MJE701	254
MJE701T	262
MJE702	254
MJE702T	262
MJE703	254
MJE703T	262
MJE710	185
MJE711	185
MJE712	183
MJE720	184
MJE721	184
MJE722	182
MJE800	253
MJE800T	263
MJE801	253
MJE802	253
MJE802T	263
MJE803	253
MJE803T	263
MJE974	183
MJE975	183
MJE1100	257
MJE1101	257
MJE1102	257
MJE1103	257
MJE2010	197
MJE2011	182
MJE2020	183
MJE2021	196
MJE2090	264
MJE2100	263
MJE2101	263
MJE2102	263
MJE2103	263
MJE2360	198
MJE2360T	198
MJE2361	198
MJE2361T	198
MJE2370	242
MJE2371	242
MJE2380	196
MJE2381	196
MJE2382	196
MJE2383	196
MJE2480	241
MJE2481	241
MJE2482	241
MJE2483	241
MJE2490	242
MJE2491	242
MJE2520	241
MJE2801	182
MJE2801T	377
MJE2901	183
MJE2901T	378
MJE2940	130
MJE2955	183
MJE2955T	332
MJE3055	182
MJE3055T	331
MJE3370	185
MJE3371	185
MJE3439	157
MJE3440	157
MJE3520	184
MJE3740	242
MJE3741	242
MJE4340	392
MJE4341	2305
MJE4342	2305
MJE4343	2305
MJE4350	393
MJE4351	2306
MJE4352	2306
MJE4353	2306
MJE5191	241
MJE5192	241
MJE5194	242
MJE5852	379
MJE5976	183
MJE5977	182
MJE5978	182
MJE5979	182
MJE5980	183
MJE5981	183
MJE5982	183
MJE5983	182
MJE5984	182
MJE5985	182
MJE6043	259
MJE6044	259
MJE6045	259
MJE9400	184
MJE9411T	123AP
MJE9450	185
MJE9730	375
MJE9741	157
MJE9742	157
MJE12007	2303
MJE13004	51
MJE13005	51
MJE13006	379
MJE13007	379
MJE13008	379
MJE13009	379
MJE15028	54
MJE15029	55
MJE15030	54
MJE15031	55
MJE16106	379
MJE-32B	197
MJE-42	197
MJE-47	375
MJE-48	375
MJE-49	198
MJE-50	198
MJE-200E	186A
MJE-220	184
MJE-340	124
MJE-371	187
MJE-521	242
MJE-2011	182
MJE-2020	183
MJF1033G	312
MJF10335	132
MJG194	183
MJG5194	242
MJH12004	2301
MJH16010	2311
MJR1C	116
MK1V115	6418
MK1V125	6419
MK10	132
MK10-2	132
MK102	132
MK279-14	5014A
MK585	312
MK2708T	2708
MK2716T	2716
MK3880J	3880
MK3880J-4	3880
MK3880N	3880
MK3880N-04	3880
MK3880P-4	3880
MK3881J	3881
MK3881J-4	3881
MK3881N	3881
MK3881N-4	3881
MK3881P	3881
MK3881P-4	3881
MK3882J	3882
MK3882J-4	3882
MK3882N	3882
MK3882N-4	3882
MK3882P	3882
MK3882P-4	3882
MK4116J-53GP	2117
MK4116N-3GP	2117
MK4564	4164
MK4564-15	4164
MK4564-20	4164
MK4564-25	4164
MK4564N-15	4164
MK5089	1690
MK5485	132
MK50992	1691
MK50993	1692
MK-10	133
MK-10-2	133
MK-10-E	132
MKL3880CP-4N	3880
MKL3881CP-4N	3881
MKL3882CP-4N	3882
ML201AT	1171
ML301T	1171
ML307S	976
ML747CP	947D
ML748CS	975
ML924	1757
ML2812	177
ML8204	1648
ML8205	1649
MLED71	3029A
MLED92	3029A
MLED650	3020
MLED655	3020
MLED930	3028
MLM101AG	975
MLM139	834
MLM139AL	834
MLM139L	834
MLM224L	987
MLM224P	987
MLM239AL	834
MLM239L	834
MLM301AU	975
MLM307U	976
MLM309K	309K
MLM311P1	922M
MLM324	987
MLM324L	987
MLM324P	987
MLM324P1	987
MLM339AL	834
MLM339L	834
MLNA339A	5067A
MLNA382	5072A
MLNA382B	5072A
MLV746A	5066A
MLV756A	5072A
MLV4370A	5061A
MLV4371A	5063A
MM0	116
MM2	116
MM3	116
MM4	116
MM5	116
MM6	116
MM7	125
MM8	125
MM9	125
MM10	125
MM74C00	74C00
MM74C00N	74C00
MM74C02	74C02
MM74C02N	74C02
MM74C04	74C04
MM74C04N	74C04
MM74C08	74C08
MM74C08N	74C08
MM74C10	74C10
MM74C10N	74C10
MM74C14	74C14
MM74C14N	74C14
MM74C20	74C20
MM74C20N	74C20
MM74C30	74C30
MM74C30J	74C30
MM74C30N	74C30
MM74C32	74C32
MM74C32J	74C32
MM74C32N	74C32
MM74C42	74C42
MM74C42N	74C42
MM74C48	74C48
MM74C48N	74C48
MM74C73N	74C73
MM74C74	74C74
MM74C74N	74C74
MM74C76	74C76
MM74C76N	74C76
MM74C85	74C85
MM74C85N	74C85
MM74C90	74C90
MM74C90N	74C90
MM74C93	74C93
MM74C93N	74C93
MM74C95	74C95
MM74C95J	74C95
MM74C95N	74C95
MM74C107	74C107
MM74C107J	74C107
MM74C107N	74C107
MM74C151	74C151
MM74C151N	74C151
MM74C154	74C154
MM74C157	74C157
MM74C160	40160B
MM74C161	74C161
MM74C161N	74C161
MM74C164	74C164
MM74C164N	74C164
MM74C173	74C173
MM74C174	74C174
MM74C175	74C175
MM74C192	74C192
MM74C192N	74C192
MM74C193	74C193
MM74C193N	74C193
MM74C195	40195B
MM74C221	74C221
MM74C221N	74C221
MM74C240	74C240
MM74C240J	74C240
MM74C240N	74C240
MM74C244	74C244
MM74C244J	74C244
MM74C244N	74C244
MM74C373	74C373
MM74C373N	74C373
MM74C374	74C374
MM74C374N	74C374
MM74C901J	74C901
MM74C901N	74C901
MM74C902	74C902
MM74C902J	74C902
MM74C902N	74C902
MM74C903	74C903
MM74C903J	74C903
MM74C903N	74C903
MM74C904	74C904
MM74C904J	74C904
MM74C904N	74C904
MM74C920	65101
MM74C922	74C922
MM74C922N	74C922
MM74C923	74C923
MM74C923N	74C923
MM74C925	74C925
MM80C95	80C95
MM80C95N	80C95
MM80C97	80C97
MM306	128
MM380	160
MM420	154
MM439	395
MM486	128
MM487	128
MM488	128
MM511	128
MM512	128
MM513	128
MM709	108
MM741	941M
MM999	159
MM1139	160
MM1151	102A
MM1152	102A
MM1153	102A
MM1154	102A
MM1199	160
MM1367/2SC684	108
MM1382	108
MM1387	108
MM1619	152
MM1742	102A
MM1755	123AP
MM1756	123AP
MM1757	123AP
MM1758	123AP
MM1803	108
MM1809	128
MM1809A	128
MM1810	195A
MM1810A	128
MM1812	171
MM1941	108
MM1943	128
MM1945	108
MM2102A-2	2102
MM2102A-4	2102
MM2102A-6	2102
MM2114N-3	2114
MM2193A	192
MM2258	154
MM2259	154
MM2260	154
MM2261	192
MM2263	198
MM2264	224
MM2266	128
MM2270	192
MM2503	160
MM2532	2532
MM2550	160
MM2552	160
MM2554	160
MM2708	2708
MM2708JQ	2708
MM2708Q	2708
MM2716	2716
MM2716JQ	2716
MM2716Q	2716
MM2894	160
MM3000	154
MM3001	154
MM3002	154
MM3003	154
MM3004	186
MM3005	324
MM3006	324
MM3007	324
MM3008	154
MM3009	154
MM3014	190
MM3100	154
MM3101	154
MM3724	235
MM3725	235
MM3726	159
MM3903	123A
MM3904	123A
MM3905	159
MM3906	159
MM4000	397
MM4000(IC)	4000
MM4001	397
MM4002	397
MM4003	397
MM4005	129
MM4006	129
MM4008	193
MM4011	4011B
MM4012	4012B
MM4013	4013B
MM4015	4015B
MM4016A	4016B
MM4017	4017B
MM4019(IC)	4019B
MM4020	153
MM4020(IC)	4020B
MM4021	4021B
MM4023	4023B
MM4024	4024B
MM4025	4025B
MM4027	4027B
MM4030	129
MM4032	129
MM4033	129
MM4036	129
MM4037	129
MM4040	4040B
MM4042	4042B
MM4048	159
MM4049	395
MM4050	4050B
MM4051	4051B
MM4052	159
MM4052(IC)	4052B
MM4208	395
MM4209	395
MM4257	395
MM4258	395
MM4429	186
MM4430	186
MM4518	4518B
MM5000	160
MM5001	160
MM5002	160
MM5280	2107
MM5280-5	2107
MM5280J	2107
MM5280N	2107
MM5280N-5	2107
MM5290	2117
MM5290-3	2117
MM5290-4	2117
MM5290N-3	2117
MM5290N-4	2117
MM5316	2061
MM5316N	2061
MM5316N-W	2061
MM5387	2060
MM5387AA	2060
MM5387AA-N	2060
MM5387AA/N	2060
MM5387AAN	2060
MM5387N	2060
MM5627AN	4027B
MM7087	154
MM7088	154
MM8002	278
MM8004	195A
MM8006	107
MM8007	107
MM53113	2061
MM53113N	2061
MM-3009	190
MMBA811	2409
MMBA811C5	2409
MMBA811C6	2409
MMBA811C7	2409
MMBA811C8	2409
MMBA812	2409
MMBA812M5	2409
MMBA812M6	2409
MMBA812M7	2409
MMBC1653	2412
MMBC1653N2	2412
MMBC1654	2413
MMBC1654N5	2413
MMBD914	593
MMBR901	2402
MMBR920	2402
MMBR930	2402
MMBR931	2402
MMBT2222	2406
MMBT2222A	2406
MMBT3903	2406
MMBT3904	2406
MMBT4124	2408
MMBTA13	2404
MMBTA14	2404
MMBTA20	2408
MMBTA63	2405
MMBTA64	2405
MMST-A13	2404
MMST-A14	2404
MMST-A63	2405
MMST-A64	2405
MMT8015	107
MMZ12(06)	143A
MN21	179
MN22	121
MN23	121
MN24	121
MN25	121
MN26	121
MN29	121
MN29BLK	121
MN29GRN	121
MN29PUR	121
MN29WHT	121
MN32	121
MN34A	109
MN46	121
MN48	121
MN49	121
MN51	109
MN52	102A
MN53	102A
MN53BLU	102A
MN53GRN	102A
MN53RED	102A
MN54	123AP
MN60	102A
MN60(DIODE)	109
MN61	127
MN61A	179
MN62A	179
MN63	127
MN63A	179
MN64	127
MN73	121
MN73BLK	121
MN73WHT	121
MN76	104
MN194	121
MN1280	15044
MN1280-K	15044
MN1280-R	15044
MN1280PQR	15044
MN1280R	15044
MN2716	2716
MN3007	1641
MN3101	1639
MN4001B	4001B
MN4002B	4002B
MN4006B	4006B
MN4008B	4008B
MN4011B	4011B
MN4012B	4012B
MN4013B	4013B
MN4015B	4015B
MN4017B	4017B
MN4018B	4018B
MN4019B	4019B
MN4020B	4020B
MN4021B	4021B
MN4022B	4022B
MN4023B	4023B
MN4024B	4024B
MN4025B	4025B
MN4027B	4027B
MN4028B	4028B
MN4029B	4029B
MN4030B	4030B
MN4035B	4035B
MN4040B	4040B
MN4042B	4042B
MN4043B	4043B
MN4044B	4044B
MN4046B	4046B
MN4049B	4049
MN4050B	4050B
MN4051B	4051B
MN4052B	4052B
MN4053B	4053B
MN4066B	4066B
MN4066BP	4066B
MN4069UB	4069
MN4069UBS	4069
MN4070B	4070B
MN4071B	4071B
MN4072B	4072B
MN4073B	4073B
MN4075B	4075B
MN4076B	4076B
MN4078B	4078B
MN4081B	4081B
MN4082B	4082B
MN4085B	4085B
MN4086B	4086B
MN4093B	4093B
MN4094B	4094B
MN4164P-15A	4164
MN4502B	4502B
MN4503B	4503B
MN4510B	4510B
MN4511B	4511B
MN4512B	4512B
MN4514B	4514B
MN4515B	4515B
MN4516B	4516B
MN4517B	4517B
MN4518B	4518B
MN4520B	4520B
MN4526B	4526B
MN4528B	4528B
MN4531B	4531B
MN4538	4538B
MN4538B	4538B
MN4539B	4539B
MN4541B	4541B
MN4543B	4543B
MN4556B	4556B
MN4584B	4584B
MN4585B	4585B
MN6049	1849
MN6061	1408
MN6061A	1408
MN6076	1414
MN6131A	15030
MN6142	1534
MN6163	15030
MN6163A	1814
MN8301	394
MN8301C	394
MN8303	36
MN8303C	36
MN40133	4013B
MN41256	21256
MN41256-15	21256
MN-53	158
MNR1545CT	6087
MOC1000	3040
MOC1001	3040
MOC1002	3040
MOC1100	3041
MOC1200	3041
MOC3009	3047
MOC3010	3047
MOC3011	3047
MOC3020	3048
MOC3021	3048
MOC3030	3049
MOC3031	3049
MOC3040	3097
MOC3041	3097
MOC5007	3090
MOC5008	3090
MOC5009	3090
MOC8020	3045
MOC8030	3044
MOC8050	3045
MOC8100	3096
MOS3635	221
MOS6502A	6502
MOTMJE371	185
MOTMJE521	184
MP01	116
MP100	6002
MP110	179
MP110B	179
MP110B-GRN	179

PART NUMBER	NTE REPLACEMENT
MP110B-RED	179
MP225	116
MP300	116
MP400	116
MP500	28
MP500(RECT)	116
MP500A	105
MP501	28
MP501A	105
MP502A	105
MP503	105
MP503A	105
MP504	28
MP504A	105
MP505	28
MP505A	105
MP506A	105
MP507	105
MP507A	105
MP525	105
MP525-1	179
MP525-2	179
MP525-3	179
MP525-4	179
MP525-5	179
MP525-6	179
MP549	125
MP600	179
MP601	179
MP602	179
MP603	179
MP651	116
MP1003-1	116
MP1003-2	116
MP1003-4	116
MP1014	121
MP1014-1	102A
MP1014-2	123AP
MP1014-4	102A
MP1014-5	102A
MP1014-6	102A
MP1509-1	121
MP1509-2	121
MP1509-3	121
MP1529	179
MP1529A	179
MP1530	179
MP1530A	179
MP1531	179
MP1531A	179
MP1534	179
MP1534A	179
MP1535	179
MP1535A	179
MP1536	179
MP1536A	179
MP1539A	179
MP1540A	179
MP1541A	179
MP1544A	179
MP1545A	179
MP1546A	179
MP1549	179
MP1550	179
MP1551	179
MP1553	179
MP1553A	179
MP1554	179
MP1554A	179
MP1555	179
MP1555A	179
MP1557	179
MP1557A	179
MP1558	179
MP1558A	179
MP1559	179
MP1559A	179
MP1612	127
MP1612A	127
MP1612B	127
MP1613	127
MP2000A	179
MP2060	121
MP2060-1	121
MP2061	121
MP2062	121
MP2063	179
MP2100A	179
MP2137A	121
MP2138A	121
MP2139A	121
MP2140A	179
MP2141A	179
MP2142A	121
MP2143A	121
MP2144A	121
MP2200A	179
MP2300A	179
MP2526	179
MP3611	121
MP3612	121
MP3613	121
MP3614	121
MP3615	121
MP3617	121
MP3730	127
MP3731	127
MP5010	998
MP5010GN	998
MP5010HN	998
MP5010N	998
MP5113	116
MP5190P	738
MP8111	152
MP8112	152
MP8211	235
MP8212	235
MP8213	235
MP8221	235
MP8222	235
MP8223	235
MP8231	235
MP8232	235
MP9602	116
MP4300158	519
MP4906063	128
MP-01	116
MP-5115	116
MPB121D	9668
MPB8212	8212
MPC17C	1047
MPC20C	1075A
MPC23C	1046
MPC29C	1089
MPC29C2	1089
MPC32C	1050
MPC41C	1093
MPC48C	1091
MPC48C1	1091
MPC48C-1	1091
MPC554	1142
MPC554C	1142
MPC561	1079
MPC561C	1079
MPC562C	1050
MPC566HB	1103
MPC566HC	1103
MPC566HD	1103
MPC574J	615P
MPC575C	1141
MPC575C2	1140
MPC577H	1082
MPC596C	1187
MPC596C2	1187
MPC596C2B	1187
MPC1001H2	1127
MPC1352C	1416
MPC1355C	749
MPC1356C	1483
MPC1356C2	1483
MPC1372C	1410
MPC1382C	1616
MPC1458C	778A
MPC3500	177
MPC7812H	966
MPC14305	960
MPC-17C	1047
MPC-23C	1046
MPC-29C	1089
MPC-574J	615P
MPD4011BC	4011B
MPD4066BC	4066B
MPD4093BC	4093B
MPD8080A	8080A
MPD14027BC	4027B
MPF101	133
MPF102	451
MPF103	133
MPF104	133
MPF105	133
MPF106	132
MPF107	132
MPF108	312
MPF109	459
MPF111	312
MPF112	312
MPF121	222
MPF161	326
MPF230	312
MPF231	312
MPF232	312
MPF256	312
MPF2608	326
MPF2609	326
MPF3330	326
MPF3823	312
MPF-102	133
MPF-106	312
MPF-121	222
MPG06D	552
MPL1000	159
MPM5006	123AP
MPN3401	555
MPQ2222	2321
MPQ2222A	2321
MPQ2906	2322
MPQ2907	2322
MPQ3725	2321
MPQ6502	2320
MPQ7041	2323
MPQ7042	2323
MPR6502CR	6502
MPS25	121
MPS393	123AP
MPS404	159
MPS404A	159
MPS654	107
MPS667	229
MPS706	123AP
MPS706A	123AP
MPS708	123AP
MPS805	108
MPS834	107
MPS918	108
MPS960T	123AP
MPS1097	160
MPS1572	159
MPS2114	2114
MPS2168	108
MPS2221	123AP
MPS2221A	123AP
MPS2222	123AP
MPS2222A	123AP
MPS2369	107
MPS2711	123AP
MPS2712	123AP
MPS2713	123AP
MPS2714	123AP
MPS2715	123AP
MPS2716	123AP
MPS2823	107
MPS2894	106
MPS2906	159
MPS2907	159
MPS2907A	159
MPS2923	123AP
MPS2924	123AP
MPS2925	123AP
MPS2926	123AP
MPS2926-BRN	123AP
MPS2926-ORG	123AP
MPS2926-RED	123AP
MPS2926-YEL	123AP
MPS2926BRN	123AP
MPS2926GRN	123AP
MPS2926ORN	123AP
MPS2926RED	123AP
MPS2926YEL	123AP
MPS3390	47
MPS3391	123AP
MPS3391A	123AP
MPS3392	123AP
MPS3393	123AP
MPS3394	123AP
MPS3395	123AP
MPS3396	123AP
MPS3397	123AP
MPS3398	123AP
MPS3402	192
MPS3403	192
MPS3404	192
MPS3405	192
MPS3414	192
MPS3415	192
MPS3416	192
MPS3417	192
MPS3534	106
MPS3536	108
MPS3563	108
MPS3564	108
MPS3565	108
MPS3566	123AP
MPS3567	194
MPS3568	194
MPS3569	194
MPS3638	159
MPS3638A	159
MPS3639	106
MPS3640	106
MPS3642	123AP
MPS3643	123AP
MPS3644	159
MPS3645	159
MPS3646	123AP
MPS3693	229
MPS3694	229
MPS3702	159
MPS3703	159
MPS3704	123AP
MPS3705	123AP
MPS3706	123AP
MPS3707	123AP
MPS3708	123AP
MPS3709	123AP
MPS3710	123AP
MPS3711	123AP
MPS3721	123AP
MPS3731	127
MPS3826	123AP
MPS3827	123AP
MPS3903	123AP
MPS3904	123AP
MPS3905	159
MPS3906	159
MPS3992	123AP
MPS4145	107
MPS4248	159
MPS4249	159
MPS4250	159
MPS4250A	159
MPS4257	106
MPS4258	106
MPS4274	233
MPS4275	233
MPS4354	159
MPS4355	159
MPS4356	159
MPS5086	159
MPS5128	108
MPS5129	108
MPS5131	108
MPS5132	108
MPS5133	108
MPS5134	123AP
MPS5135	123AP
MPS5136	123AP
MPS5137	123AP
MPS5138	159
MPS5139	159
MPS5142	159
MPS5143	159
MPS5172	123AP
MPS5551	194
MPS5668	133
MPS5910	106
MPS6134	159
MPS6351	123AP
MPS6413	123AP
MPS6502	6502
MPS6502A	6502
MPS6507	108
MPS6507(CPU)	6507
MPS6511	108
MPS6511-S	229
MPS6512	229
MPS6513	123AP
MPS6514	123AP
MPS6515	289
MPS6516	159
MPS6517	159
MPS6518	159
MPS6519	159
MPS6520	123AP
MPS6521	123AP
MPS6522	159
MPS6523	159
MPS6524	159
MPS6528	107
MPS6529	107
MPS6530	123AP
MPS6531	123AP
MPS6532	123AP
MPS6533	159
MPS6533M	159
MPS6534	159
MPS6534M	159
MPS6535	159
MPS6535M	193
MPS6539	108
MPS6540	107
MPS6541	108
MPS6542	108
MPS6543	69
MPS6544	123AP
MPS6545	123AP
MPS6546	108
MPS6547	108
MPS6548	108
MPS6552	123AP
MPS6553	123AP
MPS6554	123AP
MPS6555	123AP
MPS6556	123AP
MPS6560	287
MPS6561	123AP
MPS6562	159
MPS6563	159
MPS6564	199
MPS6565	123AP
MPS6566	123AP
MPS6567	123AP
MPS6568	123AP
MPS6568A	229
MPS6569	229
MPS6569A	229
MPS6570	229
MPS6570A	229
MPS6571	123AP
MPS6572	199
MPS6573	123AP
MPS6574	123AP
MPS6575	123AP
MPS6576	123AP
MPS6580	159
MPS6590	194
MPS6591	194
MPS6724	48
MPS6725	48
MPS7513	229
MPS8000	195A
MPS8001	123AP
MPS8097	123AP
MPS8098	123AP
MPS8099	123AP
MPS8598	159
MPS8599	159
MPS9185	123AP
MPS9400	184
MPS9410A	128
MPS9410AJ	123AP
MPS9410AK	123AP
MPS9410H	128
MPS9411	299
MPS9411A	299
MPS9411A1	299
MPS9411T	299
MPS9416	297
MPS9416-AS	123AP
MPS9416-AT	123AP
MPS9416A	123AP
MPS9416AT	123AP
MPS9416ST	297
MPS9417A	297
MPS9417A-T	123AP
MPS9417AS	297
MPS9417AT	297
MPS9417T	297
MPS9418	289
MPS9418-AS	123AP
MPS9418-AT	123AP
MPS9418AS	123AP
MPS9418AT	123AP
MPS9418S	297
MPS9418T	297
MPS9423	123AP
MPS9423F	108
MPS9423G	108
MPS9423H	108
MPS9423I	108
MPS9426	229
MPS9426-B	229
MPS9426A	123AP
MPS9426A.B	123AP
MPS9426B	229
MPS9426BC	229
MPS9426C	229
MPS9427	229
MPS9427B	229
MPS9427B.C	123AP
MPS9427C	123AP
MPS9433	123AP
MPS9433I	123AP
MPS9433J	199
MPS9433K	123AP
MPS9433T	123AP
MPS9434J	123AP
MPS9434K	123AP
MPS9444	177
MPS9450	185
MPS9460A	129
MPS9460H	129
MPS9461A1	287
MPS9466A	298
MPS9466AT	298
MPS9467A	298
MPS9467A-T	159
MPS9467AS	298
MPS9467AT	298
MPS9467T	298
MPS9468	288
MPS9468A	159
MPS9468AS	298
MPS9468AT	298
MPS9468S	298
MPS9468T	298
MPS9476AT	298
MPS9483	290A
MPS9483T	290A
MPS9600	123AP
MPS9600(G)	123AP
MPS9600-5	160
MPS9600F	123AP
MPS9600G	123AP
MPS9600G/H	108
MPS9600H	108
MPS9601	108
MPS9604	229
MPS9604D	123AP
MPS9604E	123AP
MPS9604F	123AP
MPS9604FG	123AP
MPS9604I	123AP
MPS9604R	123AP
MPS9606	177
MPS9606H	177
MPS9606I	177
MPS9611-5	123AP
MPS9616	123AP
MPS9616A	293
MPS9616J	128
MPS9618	123AP
MPS9618(J)	123AP
MPS9618H	123AP
MPS9618I	123AP
MPS9618J	123AP
MPS9620H	229
MPS9623	123AP
MPS9623C	107
MPS9623C(F)	123AP
MPS9623E	123AP
MPS9623E.G	123AP
MPS9623F	123AP
MPS 9623G	123AP
MPS9623G	123AP
MPS9623G/H	123AP
MPS9623H	123AP
MPS9623H/I	123AP
MPS9623I	123AP
MPS9623I/J	123AP
MPS9623J	123AP
MPS9625	229
MPS9625C	229
MPS9625D	229
MPS9625E	229
MPS9625F	229
MPS9625G	108
MPS9625H	229
MPS9626	123AP
MPS9626F	123AP
MPS9626G	123AP
MPS9626H	123AP
MPS9626I	123A
MPS9630	123AP
MPS9630H	123AP
MPS9630H.I	123AP
MPS9630I	123AP
MPS9630J	199
MPS9630K	199
MPS9630T	123AP
MPS9631	123AP
MPS9631(I)	123AP
MPS9631I	123AP
MPS9631J	123AP
MPS9631K	123AP
MPS9631S	123A
MPS9631T	123AP
MPS9632	123AP
MPS9632(I)	123AP
MPS9632(K)	123AP
MPS9632H	123AP
MPS9632I	123AP
MPS9632J	123AP
MPS9632K	123AP
MPS9632T	123AP
MPS9633	128
MPS9633C	123AP
MPS9633D	199
MPS9633G	123AP
MPS9634	123AP
MPS9634B	199
MPS9634C	199
MPS9634D	123AP
MPS9644	177
MPS9646	177
MPS9646G	177
MPS9646H	177
MPS9646I	177
MPS9646J	177
MPS9646M	177
MPS9666	159
MPS9680	159
MPS9680H	159
MPS9680H/E	234
MPS9680H/I	159
MPS9680I	159
MPS9680I/J	159
MPS9680J	159
MPS9680T	159
MPS9681	159
MPS9681I	159
MPS9681J	159
MPS9681K	159
MPS9681T	159
MPS9682	159
MPS9682(I)	159
MPS9682-I	159
MPS9682I	159
MPS9682J	159
MPS9682K	159
MPS9682T	106
MPS9696	297
MPS9696F	123AP
MPS9696G	289
MPS9696H	123AP
MPS9696I	123AP
MPS9700D	123AP
MPS9700E	123AP
MPS9700F	123AP
MPS9700G	123AP
MPS9700T	123AP
MPS9750D	159
MPS9750E	159
MPS9750F	290A
MPS9750G	290A
MPS9750G/F	290
MPS9750OF	159
MPS9750T	159
MPS94231	108
MPS96041	123AP
MPS96061	177
MPS96311,J	123AP
MPS96321	123AP
MPS96800	159
MPS96811	159
MPS97000	123AP
MPS964611	177
MPS-706	123AP
MPS-2716	123AP
MPS-3563	123AP
MPS-3638A	159
MPS-3702	159
MPS-3705	123AP
MPS-5172	199
MPS-6571	123AP
MPS-9630I	123AP
MPS-A05	287
MPS-A06	287
MPS-A09	199
MPS-A10	123AP
MPS-A12	172A
MPS-A13	46
MPS-A14	46
MPS-A18	47
MPS-A20	123AP
MPS-A55	288
MPS-A56	193
MPS-A65	232
MPS-A66	232
MPS-A70	159
MPS-A92	288
MPS-D51	288
MPS-H04	194
MPS-H17	229
MPS-H32	123AP
MPS-L01	287
MPS-L51	288
MPS-U01	188
MPS-U03	190
MPS-U04	190
MPS-U05	188
MPS-U06	188
MPS-U07	188
MPS-U31	302
MPS-U45	272
MPS-U51	189
MPS-U55	189
MPS-U56	189
MPS-U95	273
MPSA05	287
MPSA06	287
MPSA09	199
MPSA10	199
MPSA10-BLU	199
MPSA10-GRN	199
MPSA10-RED	199
MPSA10-WHT	199
MPSA10-YEL	199
MPSA12	46
MPSA13	46
MPSA14	46
MPSA16	199
MPSA17	199
MPSA18	47
MPSA20	123AP
MPSA20-BLU	199
MPSA20-GRN	199
MPSA20-RED	199
MPSA20-WHT	199
MPSA20-YEL	199
MPSA25	46
MPSA26	46
MPSA27	46
MPSA28	46
MPSA29	46
MPSA42	287
MPSA43	287
MPSA55	159
MPSA56	159
MPSA62	232
MPSA63	232
MPSA64	232
MPSA65	232
MPSA66	232
MPSA70	159
MPSA92	288
MPSA93	288
MPSAY2	287
MPSD01	287
MPSD02	287
MPSD03	287
MPSD04	172A
MPSD05	123AP
MPSD06	199
MPSD51	288
MPSD52	288
MPSD53	288
MPSD54	232
MPSD55	159
MPSD56	234
MPSEL239	123AP
MPSH02	123AP
MPSH04	194
MPSH05	194
MPSH07	123AP
MPSH08	107
MPSH09	107
MPSH10	229
MPSH11	229
MPSH17	229
MPSH19	229
MPSH20	229
MPSH24	229
MPSH30	229
MPSH31	229
MPSH32	229
MPSH34	161
MPSH37	229
MPSH54	159
MPSH55	159
MPSH81	106
MPSK20	199
MPSK21	199
MPSK22	199
MPSK70	234
MPSK71	234
MPSK72	234
MPSL01	194
MPSL08	106
MPSL51	288
MPSL08	106
MPSU01	188
MPSU01A	188
MPSU02	188
MPSU03	190
MPSU04	190
MPSU05	188
MPSU06	188
MPSU07	188
MPSU10	191
MPSU11	191
MPSU31	322
MPSU45	272
MPSU51	189
MPSU51A	189
MPSU52	189
MPSU55	189
MPSU56	189
MPSU57	189
MPSU60	240
MPSU95	273
MPSU-10	191
MPT28	6407
MPT32	6408
MPU131	6402
MPU6027	6402
MPU6028	6402
MPX25	116
MPX215	116
MPX9410H	128
MPX9623	123AP
MPX9623H	123AP
MPX9623H/I	123AP
MPX9623I	123AP
MPX9630I	123AP
MPX9681J	159
MPX-25	116
MQ1	123AP
MQ2	123AP

PART NUMBER	NTE REPLACEMENT
MQ3/2	116
MQ6/2	116
MQ8/2	116
MQ32	116
MQ62	116
MQ82	116
MR1C	116
MR1M	125
MR21CR	5404
MR33C-H	5005A
MR36H	134A
MR39C-H	134A
MR47C-H	135A
MR51C-H	135A
MR51E-H	135A
MR56C-H	136A
MR62C-H	137A
MR62E-H	137A
MR62H	134A
MR91C-H	139A
MR91E-H	139A
MR100C-H	140A
MR100H	140A
MR1130R	5891
MR120C-H	142A
MR150C-H	145A
MR327	5966
MR327R	5967
MR328	5966
MR328R	5967
MR330	5966
MR330R	5967
MR501	5801
MR502	5802
MR504	5804
MR506	5806
MR508	5808
MR510	5809
MR581	581
MR750	5812
MR751	5812
MR752	5814
MR754	5814
MR756	5815
MR758	5817
MR760	5817
MR801	506
MR810	552
MR811	552
MR812	552
MR813	552
MR814	552
MR816	552
MR817	506
MR818	506
MR820	576
MR821	576
MR822	576
MR824	576
MR826	577
MR830	580
MR831	580
MR832	580
MR834	580
MR836	580
MR850	580
MR851	580
MR852	580
MR854	580
MR856	580
MR860	6006
MR860R	6007
MR861	6006
MR861R	6007
MR862	6006
MR862R	6007
MR864	6008
MR864R	6009
MR866	6010
MR866R	6011
MR990	125
MR1030A	156
MR1030AR	156
MR1030B	156
MR1030BR	156
MR1031	125
MR1031A	156
MR1031AR	156
MR1031B	156
MR1031BR	156
MR1032A	156
MR1032AR	156
MR1032B	156
MR1032BR	156
MR1033A	156
MR1033AR	156
MR1033B	156
MR1033BR	156
MR1034A	156
MR1034AR	156
MR1034B	156
MR1034BR	156
MR1035A	156
MR1035AR	156
MR1035B	156
MR1035BR	156
MR1036A	156
MR1036AR	156
MR1036B	156
MR1036BR	156
MR1038A	156
MR1038AR	156
MR1038B	156
MR1038BR	156

PART NUMBER	NTE REPLACEMENT
MR1040A	156
MR1040AR	156
MR1040B	156
MR1040BR	156
MR1120	5870
MR1120R	5871
MR1121	5872
MR1121R	5873
MR1122	5874
MR1122R	5875
MR1123	5876
MR1123R	5877
MR1124	5878
MR1124R	5879
MR1125	5880
MR1125R	5881
MR1126	5882
MR1126R	5883
MR1128	5886
MR1128R	5887
MR1130	5890
MR1130R	5891
MR1237SB	6354
MR1337-1	552
MR1337-2	552
MR1337-3	552
MR1337-4	552
MR1337-5	552
MR1376	5822
MR1376R	5823
MR1386	6010
MR1386R	6011
MR1396	6010
MR1396R	6011
MR2000S	5912
MR2000SR	5913
MR2001S	5914
MR2001SR	5915
MR2002S	5916
MR2002SR	5917
MR2004S	5920
MR2004SR	5921
MR2006S	5924
MR2006SR	5925
MR2008S	5928
MR2008SR	5929
MR2010S	5932
MR2010SR	5933
MR2064	116
MR2065	116
MR2069	156
MR2070	156
MR2261	116
MR2262	117
MR2266	551
MR2271	552
MR2273	551
MR2369	156
MR3932	123AP
MR3933	128
MR3934	129
MR5040	5826
MR5040R	5827
MR9600	116
MR9601	116
MR9602	116
MR9604	123AP
MR-1	125
MR-1-1600	525
MR-1C	125
MR-1M	125
MR-150-01	116
MR-852	506
MRB1545CT	6085
MRB-20C	116
MRD14B	3035A
MRD360	3036
MRD370	3036
MRD450	161
MRD701	3034A
MRD711	3035A
MRD3050	3032
MRD3051	3032
MRD3054	3032
MRD3055	3032
MRD3056	3032
MRF161	326
MRF207	190
MRF209	350
MRF212	350
MRF216	477
MRF216(YEL)	477
MRF221	350F
MRF224	320F
MRF224-G	320F
MRF227	361
MRF229	341
MRF230	473
MRF233	350
MRF237	341
MRF238	345
MRF244	352
MRF245	352
MRF247	478
MRF260	342
MRF261	343
MRF262	343
MRF345	352
MRF402	473
MRF406	338F
MRF412	317
MRF420	335
MRF421	470
MRF421(BL)	470

PART NUMBER	NTE REPLACEMENT
MRF433	338F
MRF449	333
MRF449A	325
MRF450	335
MRF450A	325
MRF451	333
MRF452	333
MRF453	333
MRF453A	334
MRF454	335
MRF454A	336
MRF455	333
MRF455A	334
MRF458	335
MRF458A	336
MRF460	318
MRF472	295
MRF475	235
MRF476	236
MRF485	236
MRF501	161
MRF502	161
MRF511	76
MRF515	486
MRF607	472
MRF607(GN)	472
MRF618	365
MRF619	366
MRF620	366
MRF621	367
MRF629	361
MRF641	365
MRF644	366
MRF646	367
MRF648	368
MRF817	362
MRF844	485
MRF901	64
MRF911	63
MRF1500	558
MRF4070	352
MRF8004	195A
MRS6548	107
MRV-20C	116
MS1H	116
MS2H	116
MS3H	116
MS4H	116
MS5	5870
MS5C	116
MS5H	116
MS11H	116
MS12H	116
MS13H	116
MS14H	116
MS22B	123AP
MS35H	116
MS36H	116
MS50	116
MS91X3	505
MS510	192
MS701T	108
MS1010	192
MS2991	128
MS3694	123AP
MS7500	614
MS7501S	108
MS7501T	108
MS7502R	123AP
MS7502S	108
MS7502T	108
MS7503R	123AP
MS7504	172A
MS7505	159
MS7506G	129
MS7506H	128
MS7506J	128
MS9667	159
MS9681	159
MSA7505	152
MSA8503	172A
MSA8505	152
MSA8507	172A
MSA8508	186
MSG7506	128
MSJ7505	129
MSK5405	128
MSL2764K	2764
MSM63	159
MSM311EL	922M
MSM631	159
MSM2114L3RS	2114
MSM2114L-3RS	2114
MSM3764	4164
MSM3764-2	4164
MSM3764-3	4164
MSM3764-15	4164
MSM3764-20	4164
MSM4001	4001B
MSM4001RS	4001B
MSM4002	4002B
MSM4007	4007
MSM4008	4008B
MSM4011	4011B
MSM4011RS	4011B
MSM4012	4012B
MSM4013	4013B
MSM4013RS	4013B
MSM4014	4014B
MSM4015	4015B
MSM4016	4016B
MSM4016RS	4016B
MSM4017	4017B
MSM4017AN	4017B

PART NUMBER	NTE REPLACEMENT
MSM4019	4019B
MSM4020	4020B
MSM4021	4021B
MSM4022	4022B
MSM4023	4023B
MSM4024	4024B
MSM4025	4025B
MSM4027	4027B
MSM4028	4028B
MSM4029	4029B
MSM4030	4030B
MSM4034	4034B
MSM4035	4035B
MSM4040	4040B
MSM4042	4042B
MSM4043	4043B
MSM4044	4044B
MSM4049	4049
MSM4050	4050B
MSM4050B	4050B
MSM4050RS	4050B
MSM4051	4051B
MSM4052	4052B
MSM4053	4053B
MSM4063	4063B
MSM4064	4069
MSM4066	4066B
MSM4066RS	4066B
MSM4068	4068B
MSM4069	4069
MSM4069RS	4069
MSM4069U	4069
MSM4069UBRU	4069
MSM4071	4071B
MSM4071BN	4071B
MSM4072	4072B
MSM4073	4073B
MSM4075	4075B
MSM4078	4078B
MSM4081	4081B
MSM4081RS	4081B
MSM4082	4082B
MSM4085	4085B
MSM4086	4086B
MSM4093	4093B
MSM4502	4502B
MSM4503	40097B
MSM4510	4510B
MSM4511	4511B
MSM4512	4512B
MSM4514	4514B
MSM4514RS	4514B
MSM4515	4515B
MSM4516	4516B
MSM4518	4518B
MSM4539	4539B
MSM4555	4555B
MSM4556	4556B
MSM4585	4585B
MSM8080A	8080A
MSM27128	21128
MSM27128-25	21128
MSM40192	40192B
MSM40193	40193B
MSM41256	4256
MSM41256-10	4256
MSM41256-15	21256
MSP10	190
MSP10A	225
MSP15	190
MSP15A	225
MSP20	198
MSP20A	225
MSP25	198
MSP25A	225
MSP30	198
MSP1161	213
MSP999058-1	128
MSR500	116
MSR7502	108
MSR7503	123AP
MSR-500	116
MSR-V5	116
MSS1000	177
MSS7501	108
MSS7502	108
MSS-1000	116
MST10	190
MST10S	190
MST15	190
MST20	198
MST20B	198
MST20S	198
MST25	198
MST30	198
MST30B	198
MST30S	198
MST35	198
MST40	198
MST40B	198
MST40S	198
MST45	198
MST50	198
MST50B	198
MST50S	198
MST55	198
MST105	198
MST7501	108
MST-10	128
MT0404	159
MT0404-1	159
MT0404-2	159
MT021	116
MT021A	116

PART NUMBER	NTE REPLACEMENT
MT022	116
MT022A	116
MT0411	159
MT0412	159
MT0413	159
MT0414	194
MT0463	106
MT1	3031
MT2	3032
MT5	5892
MT14	116
MT24	116
MT44	116
MT64	116
MT84	125
MT100	108
MT101	108
MT102	108
MT104	123AP
MT106	108
MT107	108
MT696	123AP
MT697	123AP
MT698	154
MT699	154
MT706	123AP
MT706A	123AP
MT706B	123AP
MT707	123AP
MT708	123AP
MT726	159
MT743	108
MT744	108
MT753	108
MT869	159
MT870	154
MT871	154
MT910	154
MT911	154
MT912	154
MT1070	186
MT1075	194
MT1100	194
MT1131	159
MT1131A	159
MT1132	159
MT1132A	159
MT1132B	159
MT1254	159
MT1255	159
MT1256	159
MT1257	159
MT1258	159
MT1259	159
MT1420	159
MT1613	128
MT1711	128
MT1889	109
MT1893	154
MT1991	159
MT2303	159
MT2411	159
MT2412	159
MT3001	161
MT3002	161
MT3011	108
MT3202	124
MT4101	123AP
MT4102	123AP
MT4102A	123AP
MT4103	123AP
MT4104	188
MT4158A	8070
MT4168A	8076
MT4178A	8081
MT4191A	8085
MT4194A	8090
MT4204A	8096
MT4208A	8098
MT4218A	8103
MT4227A	8108
MT4239A	8115
MT4264-15	4164
MT4264-20	4164
MT4283A	8139
MT4300A	8149
MT4333A	8167
MT4358A	8181
MT4415A	8213
MT4438A	8226
MT6001	123AP
MT6002	123AP
MT6003	123AP
MT8244A	8115
MT9001	123AP
MT9002	123AP
MT9003	108
MT102351A	160
MTD50A06N	5711
MTD50A12N	5711
MTD65A06N	5711
MTD65A12N	5711
MTD95A06N	5721
MTD95A12N	5721
MTE801T	263
MTM6N55	2386
MTM6N60	2386
MTP1N50	2380
MTP2N10	66
MTP2N45	2380
MTP2N50	2380
MTP2P45	2381
MTP2P50	2381
MTP3N60	2387

PART NUMBER	NTE REPLACEMENT
MTP3N75	2387
MTP3N80	2387
MTP5N35	67
MTP5N40	67
MTP8N08	66
MTP8N10	2382
MTP8N18	2388
MTP8N20	2388
MTP8N45	2385
MTP8N50	2385
MTP8P08	2383
MTP8P10	2383
MTP10N12	2388
MTP10N15	2388
MTP12N05	2390
MTP12N06	2390
MTP12N08	66
MTP12N10	66
MTP12N18	2388
MTP12N20	2388
MTP565	67
MTP1225	66
MTSS8040	3102
MTT50A06N	5710
MTT50A12N	5710
MTT65A06N	5710
MTT65A12N	5710
MTT95A06N	5720
MTT95A12N	5720
MTZ4.7	5009A
MTZ5.1	5010A
MTZ5.1-B	5010A
MTZ5.1B	5010A
MTZ5.1B(TA)	5010A
MTZ5.1BT-77	5010A
MTZ5.1BTA	5010T1
MTZ5.6B	5011A
MTZ5.6B-T77	5011A
MTZ6.2	5013A
MTZ6.2B	5013A
MTZ6.2BT-77	5013A
MTZ7.5B	5015A
MTZ8.2-C	5016A
MTZ9.1B	5018A
MTZ12B	5021T1
MTZ12BT-77	5021T1
MTZ13A	5022A
MTZ16C	5025A
MTZ24-C	5031A
MTZ30A	5035A
MTZ30B	5035A
MTZ128	5021T1
MTZ607	136A
MTZ607A	136A
MTZ608	137A
MTZ608A	137A
MTZ613	139A
MTZ613A	139A
MTZ614	140A
MTZ614A	140A
MTZ616	142A
MTZ616A	142A
MTZ618	145A
MTZ618A	145A
MTZ624	146A
MTZ624A	146A
MU10	6410
MU20	6401
MU2646	6401
MU2647	6410
MU4894	6410
MU9610	188
MU9610F	188
MU9610T	188
MU9611	188
MU9611G	188
MU9611T	188
MU9660	189
MU9660S	189
MU9660T	189
MU9661	189
MU9661T	189
MU-11	605A
MUN2111	2415
MUN2112	2417
MUN2113	2419
MUN2211	2412
MUN2212	2416
MUN2213	2418
MUR105	587
MUR110	587
MUR115	587
MUR120	587
MUR405	576
MUR410	576
MUR415	576
MUR420	576
MUR430	576
MUR440	576
MUR450	577
MUR460	577
MUR470	577
MUR470E	577
MUR480	577
MUR480E	577
MUR490	577
MUR490E	577
MUR605CT	6240
MUR610CT	6240
MUR615CT	6240
MUR620CT	6240
MUR805	597
MUR810	597
MUR815	597

PART NUMBER	NTE REPLACEMENT
MUR820	597
MUR830	598
MUR840	598
MUR850	598
MUR860	598
MUR1505	599
MUR1510	599
MUR1515	599
MUR1520	599
MUR1605CT	6240
MUR1605CTR	6244
MUR1610CT	6240
MUR1610CTR	6244
MUR1615CT	6240
MUR1615CTR	6244
MUR1620CT	6240
MUR1620CTR	6244
MUR1630CT	6241
MUR1640CT	6241
MUR1650CT	6241
MUR1660CT	6241
MUR3005PT	6246
MUR3010PT	6246
MUR3015PT	6246
MUR3020PT	6246
MUR3030PT	6247
MUR3040PT	6247
MUR3050PT	6247
MUR3060PT	6247
MUR4100	577
MUR4100E	577
MUS4987	6404
MV0009	614
MV1	601
MV1Y	601
MV3	177
MV3(DIODE)	177
MV3(RECT)	116
MV4	177
MV5	601
MV11	605A
MV11T	605A
MV12	605A
MV12A	605A
MV12H	601
MV13	605A
MV13Y	605A
MV13YH	605A
MV50	3000
MV52	3003
MV53	3002
MV54	3001
MV55	3004
MV64B	3003
MV104G	617
MV201	611
MV832	613
MV834	614
MV1620	610
MV1624	611
MV1626	612
MV1634	613
MV1638	614
MV2101	610
MV2103	611
MV2104	612
MV2105	612
MV2107	613
MV2109	614
MV2201	610
MV2203	611
MV2205	614
MV2205(8)	614
MV2207	613
MV2209	614
MV2209VVC	614
MV5023	3018
MV5024	3019
MV5024B	3019
MV5025B	3018
MV5053	3020
MV5054	3025
MV5054-1	3025
MV5054-2	3025
MV5054A	3025
MV5054A-2	3025
MV5074B	3007
MV5075B	3007
MV5153	3023
MV5174B	3009
MV5253	3024
MV5274B	3010
MV5353	3021
MV5374B	3011
MV5491	3026
MV5491A	3026
MV5753	3022
MV5753B	3022
MV5774B	3008
MV9600	614
MV9601	614
MV9602	614
MV53164	3117
MV53173	3182
MV54164	3116
MV54173	3181
MV57164	3115
MV57173	3180
MV-1	601
MV-1Y	601
MV-2	177
MV-3	177
MV-5	116
MV-11	601

PART NUMBER	NTE REPLACEMENT
MV-11Y	605A
MV-12	177
MV-12H	601
MV-12N	605A
MV-13	605A
MV-13(BIAS)	116
MV-13(DIODE)	177
MV-13H	605A
MV-201	611
MVA-05A	116
MVA-05A(DIODE)	116
MVA-05A(RECT)	116
MVAM115	618
MX3122	108
MX3123	108
MX3215	1217
MX3256	1192
MX3336	746
MX3467	1214
MX3546	788
MX3634	4011B
MX3733	123AP
MX3734	159
MX3735	123AP
MX3743	123AP
MX3979	289A
MX4340	15035
MX4491	123AP
MX4492	159
MX4493	159
MX5200	1620
MX5201	1607
MX5202	1234
MX5560	6809E
MX5741	955M
MX-2269	1658
MX-3198	977
MX-3256	1192
MX-3260	1192
MX-3309	74145
MX-3364	1115
MX-3369	973
MX-3370	1195
MX-3389	1082
MX-3393	1140
MX-3452	964
MX-3545	1192
MX-3634	4011B
MX-3734	159
MX-3735	123AP
MX-3743	123AP
MX-3808	74LS74A
MX-3944	290A
MX-3948	1170
MX-3979	1565
MX-4114	5402
MX-4147	801
MX-4295	74LS273
MX-4297	7426
MX-4313	7416
MX-4314	74LS139
MX-4340	15035
MX-4376	4052B
MX-4404	1576
MX-4479	1246
MX-4491	123AP
MX-4493	159
MX-4504	289A
MX-4873	289A
MX-4969	15042
MX-4973	159
MX-5279	1416
MX-5280	1545
MX-5281	1538
MX-5368	289A
MX-5369	107
MX-5370	289A
MX-5371	289A
MX-5372	107
MX-5375	1294
MX-5421	1377
MX-5430	1248
MX-5436	1466
MX-5475	1667
MX-5476	1517
MX-5596	1465
MX-5679	928M
MX-6092	1751
MX-6093	1671
MX-6159	1781
MX-6160	1676
MX-6387	1751
MX-6406	74S11
MX-6452	1550
MX-6829	1572
MXC1312A	799
MXC1312P	799
MXC-1312	799
MXF-5375	1294
MXTA42	2430
MXTA43	2430
MXTA92	2431
MXTA93	2431
MY-1	116
MZ090	139A
MZ3BLL	5004A
MZ5.1T5	135A
MZ5A	136A
MZ6	5071A
MZ6.2	137A
MZ6.2A	137A
MZ6.2B	137A
MZ6.2T5	137A
MZ6A19	5012A
MZ8	5072A
MZ8.6	5017A
MZ9	131
MZ9.1B	139A
MZ10	140A
MZ10A	140A
MZ11	5074A
MZ12	142A
MZ12A	142A
MZ12B	142A
MZ14	144A
MZ15A	145A
MZ15T20	145A
MZ27A	146A
MZ33A	147A
MZ70-2.4A	5000A
MZ70-2.4B	5000A
MZ70-2.5A	5001A
MZ70-2.5B	5001A
MZ70-2.7A	5002A
MZ70-2.7B	5002A
MZ70-3.3A	5005A
MZ70-3.3B	5005A
MZ70MA	5070A
MZ82A	150A
MZ92-2.4	5000A
MZ92-2.5	5001A
MZ92-2.7	5002A
MZ92-3.3	5005A
MZ92-3.9A	134A
MZ92-4.7A	135A
MZ92-5.1A	135A
MZ92-5.6A	136A
MZ92-6.0B	5070A
MZ92-6.2A	137A
MZ92-6,0B	137A
MZ92-9.1A	139A
MZ92-9.1B	139A
MZ92-10A	140A
MZ92-12A	142A
MZ92-15A	145A
MZ92-24B	5080A
MZ92-27A	146A
MZ110MA	141A
MZ203	5004A
MZ204	5007A
MZ205	135A
MZ205B	5010A
MZ206	5070A
MZ207	177
MZ207(ZENER)	5071A
MZ207-02A	5071A
MZ207A	5071A
MZ207B	5071A
MZ207C	5071A
MZ208	5072A
MZ209	139A
MZ209A	139A
MZ209B	139A
MZ209C	139A
MZ210	5019A
MZ212	142A
MZ214	5023A
MZ216	5025A
MZ218	5027A
MZ220	5029A
MZ222	5030A
MZ224	5031A
MZ224A	5081A
MZ250	5018A
MZ303	5005A
MZ303B	5004A
MZ304A	5006A
MZ304B	5007A
MZ304C	5006A
MZ305A	5010T1
MZ305B	5010A
MZ305G	5010T1
MZ306	5012A
MZ306-A1	5012A
MZ306-A2	5012A
MZ306C	5070A
MZ306C3	5012A
MZ306G	5011T1
MZ307	5071A
MZ307-A1	5014A
MZ307A	5014A
MZ307A1	5014A
MZ307B	5014A
MZ307G	5013T1
MZ308	5016A
MZ309	139A
MZ309-2B	139A
MZ309B	139A
MZ310	5018A
MZ310-B	5019A
MZ310-C1	5019A
MZ310A	5019A
MZ310B	5019A
MZ310C1	5019A
MZ310G	5019T1
MZ312	5021A
MZ312A	5021A
MZ312B	5021A
MZ312C	5021A
MZ312G	5021T1
MZ314	5160A
MZ314B	5023A
MZ316	5162A
MZ318B	5027A
MZ320	5029A
MZ322	5166A
MZ324	5031A
MZ324A	5031A
MZ324B	5031A
MZ330	5035A
MZ330-23-B	5035A
MZ333	5036A
MZ333A	5036A
MZ336B	5037A
MZ408-02C	5072A
MZ409-02B	139A
MZ414-B	144A
MZ414-B3	144A
MZ414B	144A
MZ414C	145A
MZ418-B	5077A
MZ500.5	134A
MZ500.9	135A
MZ500.10	136A
MZ500.15	139A
MZ500.18	142A
MZ500.20	5079A
MZ500.26	146A
MZ500-1	5000A
MZ500-2	5002A
MZ500-4	5005A
MZ500-5	134A
MZ500-6	134A
MZ500-8	135A
MZ500-9	135A
MZ500-10	136A
MZ500-11	137A
MZ500-15	139A
MZ500-16	140A
MZ500-17	141A
MZ500-18	142A
MZ500-20	145A
MZ500-21	5025A
MZ500-26	146A
MZ500-28	147A
MZ500-35	149A
MZ500-38	150A
MZ500-39	5095A
MZ605	137A
MZ610	137A
MZ620	137A
MZ640	137A
MZ1000-13	140A
MZ1000-15	142A
MZ1000-17	145A
MZ1000-20	5079A
MZ1000-23	146A
MZ1000-24	5084A
MZ1000-26	5143A
MZ1004	5007A
MZ1005	135A
MZ1006	5070A
MZ1007	138A
MZ1008	5072A
MZ1010	140A
MZ1012	142A
MZ1014	144A
MZ1016	5075A
MZ2303A	5004A
MZ2360	177
MZ2361	177
MZ2362	5000A
MZ4682	5002A
MZ5915	5130A
MZ5918	5133A
MZ5922	5136A
MZ5927	5139A
MZ5933	5142A
MZ5956	5148A
MZ-00	177
MZ-08	5072A
MZ-047	5009A
MZ-061	5013A
MZ-075	5015A
MZ-081	5016A
MZ-5	136A
MZ-6	5071A
MZ-7	5071A
MZ-8	5072A
MZ-9	139A
MZ-10	140A
MZ-11	142A
MZ-12	142A
MZ-12B	142A
MZ-92-9.1B	139A
MZ-110	5020A
MZ-110MA	141A
MZ-130	5022A
MZ-140	5023A
MZ-150	5024A
MZ-157	5025A
MZ-177	5077A
MZ-204B	5067A
MZ-206	136A
MZ-207	5071A
MZ-208	5072A
MZ-209	139A
MZ-210	140A
MZ-210B	140A
MZ-212	142A
MZ-250	5032A
MZ-270	5033A
MZ-304B	5007A
MZ-305B	5010A
MZ-309-2B	5018A
MZ-310	5019A
MZ-310B	5019A
MZ-312B	5021A
MZ-316	5025A
MZ-324	5031A
MZ-324A	5031A
MZ-330-23-B	5084A
MZ-1000-15	142A
MZC25B10	5082A
MZC87B10	5094A
MZT33-01	615P
MZX9.1	139A
N0400	162
N020	126
N050RH06	5568
N060RH02	5567
N060RH04	5568
N060RH08	5569
N060RH10	5569
N060RH12	5569
N018RH01	5500
N018RH02	5504
N018RH03	5506
N018RH04	5507
N018RH05	5508
N018RH06	5566
N086PH12	5579
N086RH02	5575
N086RH06	5577
N086RH12	5579
N0282CT	181
N1X	154
N2A	109
N2XA	154
N4T	123AP
N8T26AN	6880
N8T28B	6889
N8T95	6885
N8T95F	6885
N8T95N	6885
N8T96	6886
N8T96F	6886
N8T96N	6886
N8T97	6887
N8T97N	6887
N8T98	6888
N8T98F	6888
N8T98N	6888
N8T245	74LS245
N13T	6402
N13T1	6402
N13T2	6402
N48	109
N57B2-3	102A
N57B2-6	102A
N57B2-7	102A
N57B2-8	103A
N57B2-11	160
N57B2-13	160
N57B2-14	160
N57B2-15	102A
N57B2-17	126
N57B2-18	126
N57B2-19	126
N57B2-22	160
N57B2-23	126
N57B2-25	102A
N57B4-2	121
N57B4-4	121
N74H00A	74H00
N74H00F	74H00
N74H00N	74H00
N74H01A	74H01
N74H01F	74H01
N74H01N	74H01
N74H04A	74H04
N74H04F	74H04
N74H05A	74H05
N74H05F	74H05
N74H08	74H08
N74H08A	74H08
N74H08F	74H08
N74H08N	74H08
N74H10A	74H10
N74H10F	74H10
N74H10N	74H10
N74H11A	74H11
N74H11F	74H11
N74H11N	74H11
N74H20A	74H20
N74H20F	74H20
N74H20N	74H20
N74H21A	74H21
N74H21F	74H21
N74H21N	74H21
N74H22A	74H22
N74H22F	74H22
N74H22N	74H22
N74H30A	74H30
N74H30F	74H30
N74H30N	74H30
N74H30W	74H30
N74H40A	74H40
N74H40F	74H40
N74H50A	74H50
N74H50F	74H50
N74H50N	74H50
N74H51A	74H51
N74H51F	74H51
N74H51N	74H51
N74H52A	74H52
N74H52F	74H52
N74H52N	74H52
N74H53A	74H53
N74H53F	74H53
N74H53N	74H53
N74H54A	74H54
N74H54F	74H54
N74H54N	74H54
N74H55A	74H55
N74H55F	74H55
N74H55N	74H55
N74H60A	74H60
N74H60F	74H60
N74H60N	74H60
N74H61A	74H61
N74H61F	74H61
N74H61N	74H61
N74H62A	74H62
N74H62F	74H62
N74H62N	74H62
N74H71A	74H71
N74H71F	74H71
N74H71N	74H71
N74H72A	74H72
N74H72F	74H72
N74H72N	74H72
N74H73A	74H73
N74H73F	74H73
N74H73N	74H73
N74H74A	74H74
N74H74F	74H74
N74H74N	74H74
N74H76B	74H76
N74H76F	74H76
N74H76N	74H76
N74H101A	74H101
N74H101F	74H101
N74H101N	74H101
N74H102A	74H102
N74H102F	74H102
N74H102N	74H102
N74H103A	74H103
N74H103F	74H103
N74H103N	74H103
N74H108A	74H108
N74H108F	74H108
N74H108N	74H108
N74LS00	74LS00
N74LS00F	74LS00
N74LS00N	74LS00
N74LS02F	74LS02
N74LS02N	74LS02
N74LS03F	74LS03
N74LS03N	74LS03
N74LS08F	74LS08
N74LS08N	74LS08
N74LS09	74LS09
N74LS09N	74LS09
N74LS10F	74LS10
N74LS10N	74LS10
N74LS11F	74LS11
N74LS11N	74LS11
N74LS20F	74LS20
N74LS20N	74LS20
N74LS27F	74LS27
N74LS27N	74LS27
N74LS30F	74LS30
N74LS30N	74LS30
N74LS32F	74LS32
N74LS32N	74LS32
N74LS40F	74LS640
N74LS42F	74LS42
N74LS42N	74LS42
N74LS51F	74LS51
N74LS51N	74LS51
N74LS73F	74LS73
N74LS73N	74LS73
N74LS74F	74LS74A
N74LS74N	74LS74A
N74LS75F	74LS75
N74LS75N	74LS75
N74LS78	74LS78
N74LS78N	74LS78
N74LS83AF	74LS83A
N74LS83AN	74LS83A
N74LS83F	74LS83A
N74LS85F	74LS85
N74LS85N	74LS85
N74LS86F	74LS86
N74LS86N	74LS86
N74LS92	74LS92
N74LS92N	74LS92
N74LS107F	74LS107
N74LS107N	74LS107
N74LS109F	74LS109A
N74LS109N	74LS109A
N74LS113	74LS113
N74LS113N	74LS113
N74LS114	74LS114
N74LS114N	74LS114
N74LS123AF	74LS123
N74LS123AN	74LS123
N74LS126A	74LS126A
N74LS126AN	74LS126A
N74LS136F	74LS136
N74LS136N	74LS136
N74LS156	74LS156
N74LS156N	74LS156
N74LS158	74LS158
N74LS158N	74LS158
N74LS160AF	74LS160A
N74LS160AN	74LS160A
N74LS161AF	74LS161A
N74LS161AN	74LS161A
N74LS163AF	74LS163A
N74LS163AN	74LS163A
N74LS168AN	74LS168A
N74LS169AN	74LS169A
N74LS173	74LS173A
N74LS173N	74LS173A
N74LS174B	74LS174
N74LS191F	74LS191
N74LS191N	74LS191
N74LS193F	74LS193
N74LS193N	74LS193
N74LS196	74LS196
N74LS196N	74LS196
N74LS197	74LS197
N74LS197N	74LS197
N74LS221F	74LS221
N74LS221N	74LS221
N74LS245	74LS245
N74LS245F	74LS245
N74LS245N	74LS245
N74LS259F	74LS259
N74LS259N	74LS259
N74LS266F	74LS266
N74LS266N	74LS266
N74LS283	74LS283
N74LS283N	74LS283
N74LS290	74LS290
N74LS290N	74LS290
N74LS293	74LS293
N74LS293N	74LS293
N74LS365A	74LS365A
N74LS365AN	74LS365A
N74LS373F	74LS373
N74LS373N	74LS373
N74LS374	74LS374
N74LS374N	74LS374
N74LS378F	74LS378
N74LS378N	74LS378
N74LS390	74LS390
N74LS390F	74LS390
N74LS390N	74LS390
N74LS393F	74LS393
N74LS393N	74LS393
N74LS395N	74LS395A
N74LS490F	74LS490
N74LS490N	74LS490
N74LS540F	74LS540
N74LS540N	74LS540
N74LS541F	74LS541
N74LS541N	74LS541
N74LS640F	74LS640
N74LS641F	74LS641
N74LS641N	74LS641
N74LS642F	74LS642
N74LS642N	74LS642
N74LS645F	74LS645
N74LS645N	74LS645
N74S00A	74S00
N74S00F	74S00
N74S00N	74S00
N74S02F	74S02
N74S02N	74S02
N74S03A	74S03
N74S03F	74S03
N74S03N	74S03
N74S04A	74S04
N74S04F	74S04
N74S05A	74S05
N74S05F	74S05
N74S08F	74S08
N74S08N	74S08
N74S09F	74S09
N74S09N	74S09
N74S10A	74S10
N74S10F	74S10
N74S10N	74S10
N74S11A	74S11
N74S11F	74S11
N74S11N	74S11
N74S15A	74S15
N74S15F	74S15
N74S15N	74S15
N74S20A	74S20
N74S20F	74S20
N74S20N	74S20
N74S22A	74S22
N74S22F	74S22
N74S22N	74S22
N74S40A	74S40
N74S40F	74S40
N74S51N	74S51
N74S64A	74S64
N74S64F	74S64
N74S64N	74S64
N74S65A	74S65
N74S65F	74S65
N74S65N	74S65
N74S74A	74S74
N74S74F	74S74
N74S74N	74S74
N74S86A	74S86
N74S86F	74S86
N74S86N	74S86
N74S86W	74S86
N74S112B	74S112
N74S112F	74S112
N74S112N	74S112
N74S113A	74S113
N74S113F	74S113
N74S113N	74S113
N74S114A	74S114
N74S114F	74S114
N74S114N	74S114
N74S133B	74S133
N74S133F	74S133
N74S133N	74S133
N74S133W	74S133
N74S134B	74S134
N74S134F	74S134
N74S134N	74S134
N74S134W	74S134
N74S138B	74S138
N74S138F	74S138
N74S138N	74S138
N74S140A	74S140
N74S140F	74S140
N74S151B	74S151
N74S151F	74S151
N74S151N	74S181
N74S153J	74S153
N74S153N	74S153
N74S157B	74S157
N74S157F	74S157
N74S158B	74S158
N74S158F	74S158
N74S174B	74S174
N74S174F	74S174
N74S175B	74S175
N74S175F	74S175
N74S181F	74S181
N74S181J	74S181
N74S181N	74S181
N74S181NN	74S181
N74S181W	74S181
N74S182NN	74S182
N74S194B	74S194
N74S194J	74S194
N74S194N	74S194
N74S194NN	74S194
N74S251B	74S251
N74S251F	74S251
N74S251N	74S251
N74S258B	74S258
N74S258J	74S258
N74S551F	74S51
N82S129	74S287
N170PH02	5580
N170PH06	5582
N170PH12	5584
N195CH02	5590
N195CH06	5591
N195CH12	5592
N201AY	123AP
N203A	5402
N203B	5404
N203C	5405
N203D	5406
N203YY	5401
N350CH02	5594
N350CH06	5595
N350CH12	5596
N413L	6407
N540CH06	5598
N540CH12	5599
N1112	2358
N1212	2357
N1213	2359
N3563	123AP
N4000	4000
N4001	4001B
N4002	4002B
N4011	4011B
N4012	4012B
N4013	4013B
N4015	4015B
N4016	4016B
N4019	4019B
N4021	4021B
N4023	4023B
N4025	4025B
N4027	4027B
N4030	4030B
N4050	4050B
N4081	4081B
N4111	2356
N4212	2357
N4213	2359
N4967	176
N5070	714
N5070B	714
N5111	708
N5111A	708
N5406	177
N5406(RCA)	177
N5558V	778A
N5709A	909D
N5709T	909
N5710A	910D
N5710T	910
N5711K	911
N5723A	923D
N5723L	923
N5740T	940
N5741A	941D
N5741T	941
N5741V	941M
N5747A	947D
N5747K	947
N7400A	7400
N7400F	7400
N7400N	7400
N7401	7401
N7401A	7400
N7401F	7400
N7401N	7401
N7402A	7402
N7402F	7402
N7402N	7402
N7403A	7403
N7403F	7403
N7403N	7403
N7404A	7404
N7404F	7404
N7405A	7405
N7405F	7405
N7406A	7406
N7406F	7406
N7407A	7407

PART NUMBER	NTE REPLACEMENT
N7407F	7407
N7408A	7408
N7408F	7408
N7408N	7408
N7409A	7409
N7409F	7409
N7409N	7409
N7410	7410
N7410A	7410
N7410F	7410
N7410N	7410
N7411A	7411
N7411F	7411
N7411N	7411
N7412N	7412
N7413A	7413
N7413F	7413
N7414	7414
N7414B	7414
N7414F	7414
N7414N	7414
N7416A	7416
N7416F	7416
N7417A	7417
N7417F	7417
N7420	7420
N7420A	7420
N7420F	7420
N7420N	7420
N7421A	7421
N7421F	7421
N7421N	7421
N7423F	7423
N7423N	7423
N7425F	7425
N7425N	7425
N7426A	7426
N7426F	7426
N7426N	7426
N7427A	7427
N7427F	7427
N7427N	7427
N7430A	7430
N7430F	7430
N7430N	7430
N7432A	7432
N7432F	7432
N7432N	7432
N7437A	7437
N7437F	7437
N7438A	7438
N7438F	7438
N7439A	7439
N7439F	7439
N7440A	7440
N7440F	7440
N7441B	7441
N7441E	7441
N7441F	7441
N7442A	7442
N7442BA	7442
N7442BF	7442
N7442F	7442
N7442N	7442
N7443A	7443
N7443F	7443
N7443N	7443
N7444B	7444
N7444F	7444
N7444N	7444
N7445	7445
N7445B	7445
N7446B	7446
N7447B	7447
N7447F	7447
N7448B	7448
N7450A	7450
N7450F	7450
N7450N	7450
N7451A	7451
N7451F	7451
N7451N	7451
N7453A	7453
N7453F	7453
N7453N	7453
N7454A	7454
N7454F	7454
N7454N	7454
N7460A	7460
N7460F	7460
N7460N	7460
N7470A	7470
N7470F	7470
N7470N	7470
N7472A	7472
N7472F	7472
N7472N	7472
N7473	7473
N7473A	7473
N7473F	7473
N7473N	7473
N7474A	7474
N7474N	7474
N7475A	7475
N7475B	7475
N7475F	7475
N7475N	7475
N7476A	7476
N7476B	7476
N7476F	7476
N7476N	7476
N7480A	7480
N7480F	7480
N7480N	7480

PART NUMBER	NTE REPLACEMENT
N7483B	7483
N7483F	7483
N7485A	7485
N7485B	7485
N7485F	7485
N7485N	7485
N7486A	7486
N7486F	7486
N7486N	7486
N7490A	7490
N7490F	7490
N7490N	7490
N7491A	7491
N7491F	7491
N7492A	7492
N7492F	7492
N7492N	7492
N7493	7493A
N7493A	7493A
N7493F	7493A
N7493N	7493A
N7494B	7494
N7494F	7494
N7495	7495
N7495A	7495
N7495F	7495
N7496B	7496
N7496F	7496
N8080A	8080A
N8234N	8234
N8235F	8235
N8235N	8235
N8266F	8266
N8266N	8266
N9602N	9602
N74107	74107
N74107A	74107
N74107F	74107
N74109B	74109
N74109F	74109
N74116	8308
N74116N	8308
N74121A	74121
N74121F	74121
N74122A	74123
N74122F	74122
N74123B	74123
N74123F	74123
N74132B	74132
N74132F	74132
N74141B	74141
N74145	74145
N74145B	74145
N74147N	74147
N74150B	74150
N74150F	74150
N74150N	74150
N74151A	7451
N74151B	74151
N74151F	74151
N74153B	74153
N74153F	74153
N74154F	74154
N74154N	74154
N74155B	74155
N74155F	74155
N74156B	74156
N74156F	74156
N74157F	74157
N74157N	74157
N74158F	74158
N74158N	74158
N74160B	74160
N74160F	74160
N74161B	74161
N74161F	74161
N74162B	74162
N74162F	74162
N74163	74163
N74163B	74163
N74163F	74163
N74163N	74163
N74164A	74164
N74164F	74164
N74165B	74165
N74165F	74165
N74166B	74166
N74166F	74166
N74170B	74170
N74170F	74170
N74173F	74173
N74173N	74173
N74174	74174
N74174N	74174
N74175	74175
N74175B	74175
N74175F	74175
N74175N	74175
N74177	74177
N74180A	74180
N74180F	74180
N74181F	74181
N74181N	74181
N74182B	74182
N74182F	74182
N74185	74185
N74190B	74190
N74190F	74190
N74191B	74191
N74191F	74191
N74192B	74192
N74192F	74192
N74193B	74193
N74193F	74193

PART NUMBER	NTE REPLACEMENT
N74195B	74195
N74195F	74195
N74196A	74196
N74198F	74198
N74198N	74198
N74199F	74199
N74199N	74199
N74221F	74221
N74221N	74221
N74365AF	74365
N74365AN	74365
N74366AF	74366
N74366AN	74366
N74367AF	74367
N74367AN	74367
N74368AF	74368
N74368AN	74368
N121122	130
N610250003	171
N5301571130	5022A
N5301571220	5030A
N5301571330	5036A
N5301571439	5008A
N5301571569	5011A
N5301810001	519
N5302470001	112
N5302491519	5010T1
N5302491759	5015A
N5302541039	5013A
N5302600001	580
N5302600002	580
N5302620001	506
N5302660001	519
N5302990002	116
N5303020003	5021A
N5303051003	580
N5303100001	580
N5303100003	580
N5303101003	580
N6102500003	171
N6103600001	288
N6103690001	159
N6104340001	159
N6104350001	289A
N6104350004	123AP
N6104420001	319P
N6104980001	159
N6105000001	123AP
N6105000004	123AP
N6105310001	198
N6105320003	2315
N6105510001	51
N6110180001	5466
N6110190001	56008
N6121860001	4016B
N6123270001	1566
N6123700001	1580
N6124440001	1567
N6124790001	960
N6125080001	1890
N6125450001	1786
N6125630001	1800
N6125640001	1801
N-020	160
N-02	116
N-41	116
N-756A	5017A
N-7400A	7400
N-7404A	7404
N-7408A	7408
N-7473A	7473
N-52329	130
N-121122	130
N-EA15X130	107
N-EA15X131	108
N-EA15X132	108
N-EA15X133	126
N-EA15X134	107
N-EA15X135	107
N-EA15X136	123AP
N-EA15X137	123AP
N-EA15X138	123AP
N-EA15X139	131MP
N-EA16X27	110MP
N-EA16X29	142A
N-EA16X30	116
N-EA2136	158
NA0305	5940
NA0505	5940
NA1	5940
NA11	5944
NA13	116
NA20	101
NA21	5944
NA22	116
NA25	116
NA30	103A
NA31W	186A
NA32	116
NA33	116
NA35	116
NA36	116
NA42	116
NA45	116
NA46	116
NA62	117
NA63	117
NA65	117
NA66	117
NA74	125
NA75	125
NA76	125
NA84	125
NA85	125

PART NUMBER	NTE REPLACEMENT
NA86	125
NA104	125
NA105	125
NA603	5940
NA615	5944
NA1005	5944
NA1022-1001	160
NA1022-1007	102A
NA1302	784
NA1505	5944
NA2002	1232
NA2005	5944
NA5015-1012	126
NA5018-1001	160
NA5018-1002	126
NA5018-1003	126
NA5018-1004	126
NA5018-1005	126
NA5018-1006	126
NA5018-1007	126
NA5018-1008	126
NA5018-1009	126
NA5018-1010	126
NA5018-1011	126
NA5018-1012	126
NA5018-1013	102A
NA5018-1014	102A
NA5018-1015	102A
NA5018-1016	102A
NA5018-1022	126
NA5018-1219	126
NA5018-1220	126
NA16221435	909
NA-22	116
NA-25	116
NA-33	116
NA-36	116
NA-46	116
NA-1114-1001	160
NA-1114-1002	160
NA-1114-1004	102A
NA-1114-1005	102A
NA-1114-1006	102A
NA-1114-1007	102A
NA-1114-1008	102A
NA-1114-1009	102A
NA-1114-1010	102A
NA-1114-1011	102A
NAM383	1232
NAP-T-Z-10	102A
NAP-TZ-8	121
NAP-TZ-10	102A
NAS29	198
NAS29A	198
NAS29B	198
NAS29C	198
NB011	294
NB011(NPN)	123AP
NB011EV	123AP
NB013	199
NB021	294
NB021EV	159
NB121	159
NB211	297
NB211E1	297
NC29	109
NC30	102A
NC32	158
NC33	103A
NC34	176
NC207AL	123AP
NC1400	2800
NC1709CP1	909
NCB14	295
NCB35	235
NCBV14	186A
NCBW35	235
NCR046	128
NCR047	128
NCR1400	2800
NCS9018D	107
ND2018	5133A
NE269	102A
NE532	928M
NE532N	928M
NE545	2001
NE545B	2001
NE555	955M
NE555CFP	955SM
NE555N	955M
NE555P	955M
NE555V	955M
NE556	978
NE556CD	978SM
NE556D	978SM
NE556N	978
NE558	926
NE558CP	926
NE558N	926
NE558V	926
NE565	989
NE565N	989
NE566CN	994M
NE567	832
NE567N	832
NE592	927D
NE592A	927D
NE592D	927D
NE592F	927D
NE592H	927
NE592N	927D
NE592N14	927D
NE645	2004
NE645B	2004

PART NUMBER	NTE REPLACEMENT
NE646	2004
NE646B	2004
NE646BN	2004
NE646N	2004
NE4304	133
NE5532F	778A
NE5560	1672
NE-446AQ	177
NF500	116
NF501	116
NF506	116
NF520	133
NF522	133
NF523	133
NF531	133
NF533	133
NF550	116
NF4302	133
NF4303	133
NF5485	133
NF5486	133
NGP3002	109
NGP3003	5802
NGP5002	137A
NGP5007	139A
NGP5010	142A
NJ100A	107
NJ100B	123AP
NJ101B	159
NJ102C	123AP
NJ107	128
NJ181B	102A
NJ202B	107
NJ703N	703
NJM78L05	977
NJM78L05A	977
NJM78L09	1902
NJM78L09A	1902
NJM78L12A	950
NJM78M05FA	960
NJM78M12	966
NJM78M18A	958
NJM555D	955M
NJM703	703
NJM1372	855
NJM1372A	855
NJM2201	1082
NJM2901	943M
NJM2901D	943M
NJM2901N	834
NJM2903D	943M
NJM2904	928M
NJM2904D	928M
NJM2904S	928S
NJM4558C	778A
NJM4558D	778A
NJM4558D-1	778A
NJM4558DM	778A
NJM4558DMA	778A
NJM4558DV	778A
NJM4558DX	778A
NJM4558MDA	778A
NJM4558S	1529
NJM4559D	778A
NJM4559DX	778A
NJM7805FA	960
NJM7812FA	966
NJM7818FA	958
NJM45580	778A
NJM-703N	703
NK4A-1A19	121
NK6B-3A19	121MP
NK8P-2A19	102A
NK9L-4A19	102A
NK12-1A19	123AP
NK14A119	121
NK65-1A19	160
NK65-2A19	103A
NK65-4A19	101
NK65A119	160
NK65B119	126
NK65C119	121
NK66-1A19	102A
NK66-2A19	102A
NK66-3A19	102A
NK74-3A19	100
NK77A119	105
NK77B119	121MP
NK77C119	121
NK84AA19	121
NK88B119	160
NK88C119	100
NK92-1A19	105
NK1302	160
NK1404	160
NKA8-1A19	160
NKT4	102A
NKT5	102A
NKT11	102A
NKT12	100
NKT24	102A
NKT25	102A
NKT32	102A
NKT33	102A
NKT42	100
NKT43	100
NKT52	102A
NKT53	102A
NKT54	102A
NKT62	100
NKT63	100
NKT64	100
NKT72	100
NKT73	100

PART NUMBER	NTE REPLACEMENT
NKT74	100
NKT102	158
NKT103	126
NKT104	158
NKT105	158
NKT106	158
NKT107	158
NKT108	158
NKT109	158
NKT121	160
NKT122	160
NKT123	102A
NKT124	160
NKT125	160
NKT126	102A
NKT127	126
NKT128	100
NKT129	100
NKT131	126
NKT132	126
NKT133	102A
NKT141	100
NKT142	100
NKT143	100
NKT144	100
NKT151	126
NKT152	126
NKT153/25	158
NKT154/25	158
NKT162	100
NKT163	100
NKT163/25	158
NKT164	100
NKT164/25	158
NKT202	100
NKT203	100
NKT204	100
NKT205	100
NKT206	100
NKT207	100
NKT208	102A
NKT211	158
NKT212	158
NKT213	158
NKT214	158
NKT215	158
NKT216	158
NKT217	158
NKT218	158
NKT219	158
NKT221	100
NKT222	102A
NKT222S1	100
NKT222S2	100
NKT223	102
NKT223A	102A
NKT224	102
NKT224A	102A
NKT224J	176
NKT225	102
NKT225A	102A
NKT225J	176
NKT226	102
NKT226A	102A
NKT226J	176
NKT227	102
NKT227A	102A
NKT228	102
NKT228A	102A
NKT229	158
NKT231	102
NKT231A	102A
NKT232	102
NKT232A	102A
NKT240	176
NKT241	176
NKT242	126
NKT243	100
NKT244	102A
NKT245	158
NKT246	102A
NKT247	102
NKT247A	102A
NKT247J	176
NKT249	126
NKT251	160
NKT252	126
NKT253	126
NKT254	126
NKT255	126
NKT261	100
NKT262	100
NKT263	100
NKT264	100
NKT265	126
NKT270	126
NKT271	158
NKT272	158
NKT273	102A
NKT274	158
NKT275	158
NKT275A	158
NKT275E	158
NKT275J	158
NKT278	102A
NKT281	158
NKT303	102A
NKT308	102A
NKT401	121
NKT402	121
NKT403	121
NKT404	121
NKT405	121
NKT406	121

PART NUMBER	NTE REPLACEMENT
NKT415	121
NKT416	121
NKT450	121
NKT451	131
NKT452	131
NKT452-S1	131
NKT453	131
NKT454	121
NKT501	121
NKT503	121
NKT504	121
NKT618	126
NKT618J	176
NKT674F	160
NKT675	126
NKT676	126
NKT677	126
NKT677F	160
NKT701	103A
NKT703	103A
NKT713	103A
NKT717	103A
NKT732	103
NKT734	101
NKT736	101
NKT751	103A
NKT752	103A
NKT753	101
NKT773	103A
NKT781	103A
NKT4055	219
NKT10339	123AP
NKT10419	123AP
NKT10439	123AP
NKT10519	123AP
NKT12329	123AP
NKT12429	123AP
NKT13329	123AP
NKT13429	123AP
NKT15325	126
NKT15425	126
NKT16229	161
NKT16325	100
NKT16425	100
NKT20329	159
NKT20329A	159
NKT20339	159
NKT35219	161
NKT80111	133
NKT80211	133
NKT80212	133
NKT80213	133
NKT80214	133
NKT80215	133
NKT80216	133
NKT800112	133
NKT800113	133
NKT-401	121
NKT-402	121
NKT-403	121
NKT-404	121
NKT-405	121
NKT-415	121
NKT-416	121
NKT-451	121
NKT-452	121
NKT-453	121
NKT-454	121
NKT-501	121
NKT-503	121
NKT-504	121
NL5	116
NL10	116
NL15	116
NL20	116
NL25	116
NL30	116
NL40	116
NL50	116
NL60	116
NL100B	107
NL578B	5567
NL578N	5569
NL578P	5569
NL578PA	5569
NL578PB	5569
NL578S	5569
NL578T	5569
NL579B	5567
NL579N	5569
NL579P	5569
NL579PA	5569
NL579PB	5569
NL1580N	5596
NL1580P	5596
NL1580PA	5596
NL1580PB	5596
NL1580S	5596
NL1580T	5596
NL1958PB	5381
NL7805	960
NL-2N683	5522
NL-2N684	5523
NL-2N685	5524
NL-2N686	5525
NL-2N687	5526
NL-2N688	5527
NL-2N689	5528
NL-2N690	5529
NL-2N691	5530
NL-2N692	5531
NL-10	116
NL-102	123AP
NL-151E	5371

PART NUMBER	NTE REPLACEMENT
NL-C35A	5542
NL-C35B	5543
NL-C35C	5544
NL-C35D	5545
NL-C35E	5546
NL-C35F	5541
NL-C35G	5543
NL-C35H	5544
NL-C35M	5547
NL-C35U	5541
NL-C36A	5502
NL-C36A/2N1844	5502
NL-C36B	5504
NL-C36B/2N1846	5504
NL-C36C	5506
NL-C36C/2N1848	5506
NL-C36D	5507
NL-C36D/2N1849	5507
NL-C36E	5508
NL-C36E/2N1850	5508
NL-C36F	5545
NL-C36G	5503
NL-C36G2N1845	5503
NL-C36H	5505
NL-C36U	5545
NL-C37A	5522
NL-C37B	5524
NL-C37C	5526
NL-C37D	5527
NL-C37E	5528
NL-C37F	5545
NL-C37G	5545
NL-C37M	5529
NL-C37N	5531
NL-C37S	5530
NL-C37U	5545
NL-C38A	5541
NL-C38B	5543
NL-C38C	5544
NL-C38D	5545
NL-C38E	5546
NL-C38G	5543
NL-C38H	5544
NL-C38M	5547
NL-C38U	5541
NL-C45N	5579
NL-C45S	5579
NL-C45T	5579
NL-C52N	5579
NL-C52S	5579
NL-C52T	5579
NL-C135A2N3754	5542
NL-C135B2N3755	5543
NL-C135C2N3756	5544
NL-C135D2N3757	5545
NL-C135E2N3758	5546
NL-C135F2N3759	5541
NL-C135M2N3760	5547
NL-C137E	5546
NL-C137M	5547
NL-C151E	5371
NL-C151M	5371
NL-C152N	5579
NL-C152P	5579
NL-C152PA	5579
NL-C152PB	5579
NL-C152S	5579
NL-C152T	5579
NL-C154A	5371
NL-C154B	5371
NL-C154C	5371
NL-C154D	5371
NL-C154E	5371
NL-C154M	5371
NL-F151B	5371
NL-F151C	5371
NL-F151D	5371
NL-F152N	5579
NL-F152OP	5579
NL-F152P	5579
NL-F152S	5579
NL-F152T	5579
NL-F158A	5371
NL-F158B	5371
NL-F158C	5371
NL-F158D	5371
NL-F158E	5371
NL-F158M	5371
NLC45N	5579
NLC45S	5579
NLC45T	5579
NLC52N	5579
NLC52S	5579
NLC52T	5579
NLC151M	5371
NLC152N	5579
NLC152P	5579
NLC152PA	5579
NLC152PB	5579
NLC152S	5579
NLC152T	5579
NLC154A	5371
NLC154B	5371
NLC154M	5371
NLC290A	5587
NLC290B	5587
NLC290C	5587
NLC290D	5587
NLC290E	5587
NLC290M	5587
NLC290N	5590
NLC290P	5590
NLC290PA	5590
NLC290PB	5590

PART NUMBER	NTE REPLACEMENT
NLC290S	5590
NLC390E	5595
NLC390EX555	5595
NLC390M	5595
NLC390MX555	5595
NLC390N	5596
NLC390P	5596
NLC390PA	5596
NLC390PB	5596
NLC390S	5596
NLC451E	5598
NLC451M	5598
NLC501A	5594
NLC501B	5594
NLC501C	5595
NLC501D	5595
NLC501E	5595
NLC501M	5595
NLC501N	5596
NLC501P	5596
NLC501PA	5596
NLC501PB	5596
NLC501S	5596
NLC501T	5596
NLC701N	5599
NLC701P	5599
NLC701PA	5599
NLC701S	5599
NLC701T	5599
NLC703N	5599
NLC703P	5599
NLC703PA	5599
NLC703PB	5599
NLC703S	5599
NLC703T	5599
NLC1580A	5594
NLC1580B	5594
NLC1580C	5595
NLC1580D	5595
NLC1580E	5595
NLC1580M	5595
NLF151B	5371
NLF151C	5371
NLF151D	5371
NLF151E	5371
NLF151M	5371
NLF151N	5372
NLF151P	5372
NLF151S	5372
NLF151T	5372
NLF152N	5579
NLF152P	5579
NLF152S	5579
NLF152T	5579
NLF153B	5368
NLF153C	5368
NLF153D	5368
NLF153E	5368
NLF153M	5368
NLF153P	5368
NLF153S	5368
NLF153T	5368
NLF158A	5371
NLF158B	5371
NLF158C	5371
NLF158D	5371
NLF158E	5371
NLF158M	5371
NLF159A	5368
NLF159B	5368
NLF159C	5368
NLF159D	5368
NLF159E	5368
NLF159M	5368
NLF358A	5380
NLF358C	5380
NLF358D	5380
NLF358E	5380
NLF358M	5380
NLF390P	5596
NLF390PA	5596
NLF390PB	5596
NLF390S	5596
NLF390T	5596
NLF701N	5599
NLF701P	5599
NLF701PA	5599
NLF701PB	5599
NLF701S	5599
NLF701T	5599
NMC2532	2532
NMC2532Q	2532
NMC2732	2732A
NMC2732Q	2732A
NMC4164	4164
NMC4164-15	4164
NMC4164-20	4164
NN50	116
NN650	159
NN7000	192
NN7001	192
NN7002	192
NN7003	192
NN7004	192
NN7005	192
NN7500	193
NN7501	193
NN7502	193
NN7503	193
NN7504	193
NN7505	193
NN7511	193
NN9017	123AP
NP04S49	287

PART NUMBER	NTE REPLACEMENT
NP50A	116
NP60A	116
NP389	116
NP917	108
NP918	108
NP2221	123AP
NP2221A	123AP
NP2222	123AP
NP2222A	123AP
NP3391	199
NP3391A	199
NP3644	159
NP3645	159
NP4356	159
NPC0100	116
NPC0010	116
NPC0050	116
NPC069	199
NPC069-98	199
NPC079	194
NPC079-98	194
NPC108	116
NPC108A	116
NPC115	128
NPC167	161
NPC173	108
NPC187	128
NPC188	108
NPC189	128
NPC211N	133
NPC212N	133
NPC214N	133
NPC215N	133
NPC216N	133
NPC312N	133
NPC737	123AP
NPC1075	233
NPC7629	1233
NPS404	159
NPS404A	159
NPS6512	123AP
NPS6513	123AP
NPS6514	123AP
NPS6516	159
NPS6517	159
NPS6518	153
NPS6520	123AP
NPSA20	199
NR05	101
NR041	123AP
NR041E	123AP
NR071AU	123AP
NR091ET	123AP
NR5	101
NR10	101
NR20	103
NR30	101
NR201AY	123AP
NR261AS	123AP
NR271AY	123AP
NR421	107
NR421DG	107
NR461	123AP
NR461AA	161
NR461AF	107
NR461EH	123AP
NR601BT	159
NR621AT	159
NR621EU	159
NR631AY	159
NR700	101
NR7916	132
NR-071AU	123AP
NR-10	101
NR-141ES	192
NR-141ET	192
NR-261AS	123AP
NR-421AS	199
NR-431AG	123AP
NR-431AS	123AP
NR-461AS	123AP
NR-601AT	159
NR-621AU	234
NR-671ET	193
NS010	5550
NS020	5550
NS15/1C	503
NS20-42	154
NS32	102
NS121	102
NS210	5552
NS220	5552
NS310	5554
NS316	132
NS320	5554
NS345	161
NS381	108
NS382	108
NS404	159
NS406	161
NS410	5554
NS420	5554
NS475	123AP
NS476	123AP
NS477	123AP
NS478	123AP
NS479	123AP
NS480	123AP
NS510	5556
NS520	5556
NS610	5556
NS620	5556
NS661	159
NS662	159

PART NUMBER	NTE REPLACEMENT
NS663	159
NS664	159
NS665	159
NS666	159
NS667	159
NS668	159
NS710	5558
NS720	5558
NS731	123AP
NS731A	123AP
NS732	159
NS732A	159
NS733	123AP
NS733A	123AP
NS734	123AP
NS734A	123AP
NS792	235
NS793	235
NS810	5558
NS820	5558
NS949	123AP
NS950	192
NS1000	159
NS1000A	159
NS1001	159
NS1001A	159
NS1110	124
NS1355	192
NS1356	108
NS1500	123AP
NS1510	107
NS1672	159
NS1672A	159
NS1673	159
NS1674	159
NS1674A	159
NS1675	159
NS1675A	159
NS1861	159
NS1861A	159
NS1862	159
NS1863	159
NS1863A	159
NS1864	159
NS1864A	159
NS1900	192
NS1960	192
NS1972	123AP
NS1973	123AP
NS1974	123AP
NS1975	123AP
NS2006	156
NS2007	156
NS2008	156
NS2100	128
NS2101	128
NS3006	156
NS3007	156
NS3008	156
NS3039	107
NS3040	107
NS3041	107
NS3300	108
NS3903	123A
NS3904	123A
NS3905	159
NS3906	159
NS6001	159
NS6062	159
NS6062A	159
NS6063	159
NS6063A	159
NS6064	159
NS6064A	159
NS6065	159
NS6065A	159
NS6112	108
NS6113	108
NS6114	123AP
NS6115	123AP
NS6207	123AP
NS6210	123AP
NS6211	159
NS6211A	159
NS6212	154
NS6241	159
NS7261	108
NS7262	123AP
NS7267	108
NS9011H	229
NS9016F	107
NS9018E	108
NS9018F	108
NS9018G	108
NS9400	128
NS9420	128
NS9500	128
NS9540	128
NS9710	108
NS9728	128
NS9729	128
NS9730	128
NS9731	128
NS12006	5882
NS15835L1	506
NS30000	6006
NS30001	6006
NS30002	6006
NS30003	6008
NS30004	6010
NS45006	319P
NS48004	154
NS-3065	712
NSD102	211

PART NUMBER	NTE REPLACEMENT
NSD103	210
NSD104	210
NSD105	210
NSD106	210
NSD131	171
NSD132	171
NSD133	171
NSD134	171
NSD135	171
NSD202	211
NSD203	211
NSD204	211
NSD205	211
NSD206	211
NSD457	171
NSD458	171
NSD459	171
NSD3020P	6090
NSD3030P	6090
NSD3045P	6090
NSD3439	228A
NSD3440	228A
NSD6020	6094
NSD6030	6094
NSD6045	6094
NSD6178	210
NSD6179	210
NSD6180	211
NSD6181	211
NSDU01	210
NSDU01A	188
NSDU02	210
NSDU03	190
NSDU04	190
NSDU05	210
NSDU06	210
NSDU07	49
NSDU10	191
NSDU51	211
NSDU51A	211
NSDU52	211
NSDU55	211
NSDU56	211
NSDU57	50
NSE170	187
NSE171	187
NSE180	186
NSE181	186
NSE457	157
NSE458	157
NSE459	157
NSE-181	186A
NSL5023	3018
NSL5024	3019
NSL5027	3025
NSL5057	3022
NSL5076A	3007
NSL5253	3024
NSL5253A	3024
NSL5274	3010
NSL5353	3021
NSL5353A	3021
NSL5374	3011
NSL5753	3025
NSL5774	3008
NSL6053	3020
NSL6153	3023
NSL6253	3024
NSL6353	3021
NSL6753	3022
NSM8139	6200
NSM8140	6200
NSM8141	6200
NSM8142	6202
NSM8143	6204
NSN71L	3061
NSN71R	3052
NSP41	196
NSP41A	196
NSP41B	196
NSP42	197
NSP42A	197
NSP42B	197
NSP105	332
NSP205	331
NSP370	153
NSP520	152
NSP521	152
NSP2010	332
NSP2011	332
NSP2020	331
NSP2021	331
NSP2100	261
NSP2101	261
NSP2102	261
NSP2103	261
NSP2480	331
NSP2481	331
NSP2482	331
NSP2483	331
NSP2955	332
NSP3055	331
NSP4918	153
NSP4919	153
NSP4920	153
NSP5190	196
NSP5191	196
NSP5192	196
NSP5193	197
NSP5194	197
NSP5195	197
NSP5974	332
NSP5975	332
NSP5976	332

PART NUMBER	NTE REPLACEMENT
NSP5977	331
NSP5979	331
NSR8140	6206
NSR8141	6206
NSR8142	6208
NSR8143	6210
NSS1021	125
NST2025	6087
NST2035	6087
NST2045	6087
NST2525	6087
NST2535	6087
NST2545	6087
NST3020	6085
NST3030	6085
NST3045	6085
NT010	56004
NT06	56004
NT08	56004
NT015	56004
NT3C10	5186A
NT3C11	5187A
NT3C12	5188A
NT3C13	5189A
NT3C15	5191A
NT3C16	5192A
NT3C18	5194A
NT3C20	5196A
NT3C22	5197A
NT3C24	5198A
NT3C27	5200A
NT3C30	5202A
NT3C33	5203A
NT3C36	5204A
NT3C39	5205A
NT3C43	5206A
NT3C47	5208A
NT3C51	5210A
NT3C56	5212A
NT3C62	5214A
NT3C68	5215A
NT3C75	5216A
NT3C82	5217A
NT3C91	5219A
NT3C100	5220A
NT16	56004
NT18	56004
NT26	56004
NT28	56004
NT36	56006
NT38	56006
NT46	56006
NT48	56006
NT56	56008
NT58	56008
NT66	56008
NT68	56008
NT101	5401
NT102	6402
NT110	56004
NT115	56004
NT210	56004
NT215	56004
NT310	56006
NT315	56006
NT410	56006
NT415	56006
NT481EY	287
NT510	56008
NT515	56008
NT610	56008
NT615	56008
NT5551	5105A
NTA562-Y	290A
NTB601	262
NTC1868	283
NTC2331	291
NTC2333	198
NTC2335	51
NTC2518	51
NTC-4	108
NTC-5	108
NTC-6	159
NTC-7	199
NTC-8	287
NTC-9	198
NTC-10	159
NTC-11	128
NTC-12	165
NTC-13	109
NTC-14	109
NTC-15	519
NTC-16	503
NTC-17	506
NTC-18	125
NTC-19	116
NTC-20	5074A
NTC-21	712
NTD560A	263
NTE83	81
NTE84	82
NTE524	524V15
NTE615A	615P
NTE703	703
NTE875	875
NTE3029	3029A
NTE3034	3034A
NTE3035	3035A
NTE15001	1728
NTE15004	1714S
NTE15009	1702
NU34	109
NU398B	116
NV004	614

PART NUMBER	NTE REPLACEMENT
NV009	614
NZ-206	5070A
O0415	159
O1F-SL8020	703
O2Z5.6A	5011A
O2Z6.2W	5013A
O2Z8.2A	5072A
O2Z12A	5021A
O2Z12GR	142A
O2Z-10A	140A
O4-8054-3	116
O4-8054-4	116
O4-8054-7	116
O5Z8.2U	5072A
O5Z9.1Z	5018A
O5Z12Z	5021A
O5Z33Y	5036A
O7B2B	708
O7B27	708
O9-306113	177
O9-306195	177
O9-309060	123AP
O50A1GOF	5567
O50A100F	5567
O50AAGOF	5567
O50AAOOF	5567
O50BBGOF	5567
O50BBOOF	5567
O101	116
O200	5944
O201	5944
O210	5944
O211	5944
O220	5944
O221	5944
O234	116
O5001GOF	5567
O5002GOF	5567
O5002OOF	5567
O5003GOF	5568
O5003OOF	5568
O5004GOF	5568
O5004OOF	5568
O5005GOF	5568
O5005OOF	5568
O5006GOF	5568
O5006OOF	5568
O5007GOF	5569
O5007OOF	5569
O5008GOF	5569
O5009GOF	5569
O5009OOF	5569
O5010GOF	5569
O5010OOF	5569
O5011GOF	5569
O5012GOF	5569
O5012OOF	5569
O5011OOF	5569
O-I5551	194
O-I5551	194
OA09	109
OA2	507
OA6	109
OA7	109
OA8	116
OA9	109
OA9D	109
OA9Z	109
OA10	5800
OA47	109
OA50	109
OA70	109
OA71	109
OA71C	109
OA72	109
OA73	109
OA73C	109
OA74	109
OA74A	109
OA79	109
OA81	109
OA81C	109
OA85	109
OA85C	109
OA90	109
OA90-FM	109
OA90A-G	109
OA90A-M	109
OA90AG	109
OA90AM	109
OA90FM	110MP
OA90FV	109
OA90G	109
OA90GA	109
OA90LF	109
OA90M	109
OA90MFV	109
OA90MLF	109
OA90Z	109
OA90ZA	109
OA91	109
OA92	109
OA95	109
OA99	109
OA126-12	142A
OA126/5	5069A
OA126/10	5020A
OA126/12	142A
OA126/14	144A
OA127	116
OA128	116
OA129	116
OA130	116
OA131	116

PART NUMBER	NTE REPLACEMENT
OA132	116
OA134Q	109
OA150	109
OA159	109
OA160	109
OA161	109
OA172	109
OA174	109
OA180	116
OA200	109
OA202	177
OA205	177
OA210	116
OA211	116
OA214	116
OA541	109
OA909	109
OA1265	135A
OA2002	177
OA2005	177
OA12610	140A
OA12612	142A
OA12614	144A
OA-10	128
OA-90	109
OA-90(G)	109
OA-90G	109
OA-91	109
OA-95	177
OAZ200	135A
OAZ201	135A
OAZ202	136A
OAZ203	137A
OAZ204	5014A
OAZ206	5016A
OAZ207	5018A
OAZ208	5008A
OAZ209	135A
OAZ210	5013A
OAZ211	5015A
OAZ212	139A
OAZ213	142A
OAZ222	5178AK
OAZ223	5180AK
OAZ224	5181A
OAZ225	5182AK
OAZ227	5185A
OAZ228	5186A
OAZ230	5188A
OAZ232	5191A
OAZ234	5194A
OAZ236	5197A
OAZ240	135A
OAZ241	135A
OAZ242	136A
OAZ243	137A
OAZ244	5014A
OAZ245	5015A
OAZ246	5016A
OAZ247	139A
OAZ268	5008A
OAZ269	135A
OAZ270	137A
OAZ271	5015A
OAZ272	139A
OAZ273	142A
OAZ290	5180AK
OAZ291	5182AK
OAZ292	5185A
OB2764K-2	2764
OC16	104
OC19	121
OC20	121
OC22	104
OC23	104
OC24	104
OC25	104
OC26	104
OC27	104
OC28	104
OC29	104
OC30	131
OC30A	131
OC30B	131
OC32	102
OC33	102A
OC34	102A
OC35	104
OC36	104
OC38	102A
OC40	126
OC41	102
OC41A	102A
OC41N	126
OC42	126
OC42N	126
OC43	126
OC43N	126
OC44	126
OC44N	126
OC45	102A
OC45N	126
OC46	102A
OC46N	126
OC47	102A
OC47N	126
OC50	126
OC53	160
OC54	160
OC55	160
OC56	102A
OC57	102A
OC58	102A
OC59	102A
OC60	102A
OC65	102A
OC66	102A
OC70	102A
OC70N	102A
OC71	102A
OC71A	102A
OC71N	102A
OC72	102A
OC73	102A
OC74	102A
OC74N	102A
OC75	102A
OC75N	102A
OC76	102A
OC77	102A
OC77M	102A
OC78	102
OC79	102A
OC80	102A
OC81	102A
OC81D	102A
OC81DD	102A
OC81DN	158
OC81N	158
OC83	158
OC83N	158
OC84	158
OC84N	158
OC110	102A
OC120	102A
OC122	102A
OC123	102A
OC130	126
OC139	101
OC140	101
OC141	101
OC169	160
OC169R	160
OC170	160
OC170N	160
OC170R	160
OC170V	160
OC171	160
OC171N	160
OC171R	160
OC171V	160
OC200	159
OC201	159
OC202	159
OC203	159
OC204	159
OC205	159
OC206	159
OC207	159
OC302	102A
OC303	102A
OC304	102A
OC304-1	102A
OC304-2	102A
OC304-3	102A
OC304N	102A
OC305	102A
OC305-1	102A
OC305-2	102A
OC306	102A
OC306-1	102A
OC306-2	102A
OC306-3	102A
OC307	102A
OC307-1	102A
OC307-2	102A
OC307-3	102A
OC308	102A
OC309	102A
OC309-1	102A
OC309-2	102A
OC309-3	102A
OC318	102A
OC320	160
OC330	102A
OC331	126
OC340	102A
OC341	126
OC342	126
OC343	126
OC350	102A
OC351	126
OC360	102A
OC361	126
OC362	126
OC363	126
OC364	102A
OC390	126
OC400	160
OC410	160
OC430	159
OC430K	159
OC440	159
OC440K	159
OC443	159
OC443K	159
OC445	159
OC445K	159
OC449	159
OC449K	159
OC450	159
OC460	159
OC460K	159
OC463	159
OC463K	159
OC465	159
OC465K	159
OC466	159
OC466K	159
OC467	159
OC467K	159
OC468	159
OC468K	159
OC469	159
OC469K	159
OC470	159
OC470K	159
OC601	102A
OC602	102A
OC602SP	102A
OC602SQ	102A
OC603	102A
OC604	102A
OC604SP	102A
OC612	126
OC613	126
OC614	126
OC615	126
OC615N	160
OC700	159
OC700A	159
OC700B	159
OC702	159
OC702A	159
OC702B	159
OC704	159
OC711	102A
OC740	159
OC740G	159
OC740M	159
OC7400	159
OC742	159
OC742G	159
OC742M	159
OC742O	159
OC810	102A
OC7400	159
OC7420	159
OC-16	121
OC-22	121
OC-23	121
OC-24	121
OC-25	121
OC-26	121
OC-28	121
OC-29	121
OC-30A	121
OC-34	102A
OC-35	121
OC-36	121
OC-38	102A
OC-44	100
OC-45	100
OC-46	100
OC-47	100
OC-65	102A
OC-66	102A
OC-70	102A
OC-71	102A
OC-71A	102A
OC-71N	102A
OC-72	102A
OC-73	102A
OC-74	102A
OC-75	102A
OC-75N	102A
OC-77	102A
OC-79	102A
OC-81DD	102A
OC-130	100
OC-140	100
OC-169	160
OC-170	160
OC-171	160
OC-304	176
OC-304/1	158
OC-304/2	158
OC-304/3	158
OC-305/1	158
OC-305/2	158
OC-306/1	158
OC-306/2	158
OC-306/3	158
OC-307	102A
OC-308	102A
OC-318	102A
OC-330	102A
OC-340	102A
OC-341	102A
OC-342	102A
OC-343	102A
OC-350	102A
OC-351	102A
OC-360	102A
OC-362	102A
OC-363	102A
OC-364	102A
OC-390	126
OC-410	100
OC-602	102A
OC-604	102A
OC-612	126
OC-613	126
OC-614	126
OC-615	160
OC-975	126
ODZ120009AA	5021A
OF66	506
OF129	102A
OF156	177
OF160	116
OF162	177
OF164	116
OF173	109
OF449	519
OF-129	102A
OG-30L125	116
OIGS406600A	4066B
OIGS781500A	968
OIKE780120A	966
OIMA310100A	1639
OISA701600A	1781
OISN783100A	1797
OLD315D	3010
OLD416LD	3000
OLD3101D	3024
OLD4101D	3025
OLD7101D	3021
ON047204-2	123AP
ON67A	109
ON74LS03N	74LS03
ON74LS08N	74LS08
ON74LS10N	74LS10
ON74LS145N	74LS145
ON74LS174N	74LS174
ON74LS175N	74LS175
ON74LS240N	74LS240
ON74LS244N	74LS244
ON74LS245A	74LS245
ON74LS373N	74LS373
ON74LS374N	74LS374
ON74LS670N	74LS670
ON74S00N	74S00
ON74S10N	74S10
ON74S20N	74S20
ON74S138N	74LS138
ON174	160
ON271	123AP
ON274	123AP
ON769	47
ON3161-R	3098
ON7438N	7438
ON47204-1	123AP
OOV60529	128
OP130	3028
OP800	3032
OP801	3032
OP12151	3040
OP12152	3040
OP12252	3040
OP-130	3028
OP-131	3028
OPB804	3102
OPI2153	3041
OPI2253	3041
OPI2255	3041
OPI3010	3047
OPI3150	3084
OPI3151	3084
OPI3152	3083
OPI3153	3084
OPI3250	3084
OPI3251	3084
OPI3252	3083
OPI3253	3084
OPI-2151	3040
OPI-2152	3040
OPI-2252	3040
OPL1209	3007
OPL1210	3009
OPL1211	3010
OPL-209A-A	3008
OPL-270	3008
OPL-270-50	3008
ORF-2	128
OS70	109
OS492	176
OS536G	123AP
OS16308	116
OS-16308	116
OSD0033	138A
OSD-0033	5071A
OSS16308	109
OSS16685	109
OSS36503	116
OSS36685	116
OSS36885	116
OSS-16308	116
OSS-16685	109
OSS-36885	116
OTR101509AA	290A
OTR162700AC	382
OTR181509AB	85
OTR195909AA	85
OTR222909AB	399
OTR223800AA	375
OTR387500AA	2408
OTR388009AA	85
OTR508000EA	2300
OTR562009AA	290A
OTR880000AB	152
OTR949000AB	32
OTR968000AA	398
OV02	506
OV2764KFA552	2764
OX-1753	5014A
OY101	116
OY5061	116
OY5062	116
OY5063	116
OY5064	116
OY5065	116
OY5066	116
OY5067	125
OY-5061	116
OY-5062	116
OZ3.6T5	134A
OZ3.6T10	134A
OZ5.1T5	135A
OZ5.1T10	135A
OZ5.6T5	136A
OZ5.6T10	136A
OZ6.2T5	137A
OZ6.2T10	137A
OZ10T5	140A
OZ10T10	140A
OZ12T5	142A
OZ12T10	142A
OZ15T5	145A
OZ15T10	145A
OZ27T5	146A
OZ27T10	146A
OZ-0505P600	5011A
P0100-01	5348
P0100-02	5348
P0100-04	5348
P0100-06	5346
P080PH06FN0	5371
P080PH12FN0	5372
P080RH06FN0	5368
P080RH12FJ0	5369
P080RH12FN0	5369
P0102AA	5402
P0102BA	5404
P0102CA	5405
P0102DA	5405
P0103AA	5402
P0103BA	5404
P0103CA	5405
P0103DA	5405
P00347100	159
P00347101	159
P04410025-003	519
P04410042-001	519
P04410042-002	519
P04440028-001	123AP
P04440028-009	123AP
P04440028-014	123AP
P04440028-8	123AP
P04440032-001	123AP
P04450016-004	159
P04450026P5	128
P04450032-1	218
P04450034-1	181
P04450034-2	181
P04450037	181
P0SN7407N	4015B
P04-41-0025-001	519
P04-42-0011	519
P04-44-0028	123AP
P04-45-0014-P5	123AP
P04-45-0014-P2	123AP
P04-45-0015-P1	159
P04-45-0016-P1	159
P04-45-0026-P5	128
P04-450016-002	159
P027RH06FN0	5360
P055I	2764
P074LS04	74LS04
P074LS368A	74LS368
P0445-0034-1	181
P0445-0034-2	181
P1A	121
P1A5	116
P1B	159
P1B5	116
P1C	159
P1C5	116
P1CG	159
P1D	159
P1D5	116
P1E	219
P1E-1	121
P1E-1BLK	219
P1E-1BLU	219
P1E-1GRN	219
P1E-1RED	219
P1E-1V10	180
P1E-1VIO	219
P1E-2BLK	219
P1E-2BLU	219
P1E-2GRN	219
P1E-2RED	219
P1E-2V10	180
P1E-2VIO	219
P1E-3BLK	219
P1E-3BLU	219
P1E-3GRN	219
P1E-3RED	219
P1E-3V10	180
P1E-3VIO	219
P1F	127
P1G	121
P1H	159
P1J	159
P1K	121
P1KBLK	121
P1KBLU	121
P1KBRN	121
P1KGRN	121
P1KORN	121
P1KRED	121
P1KYEL	121
P1L	102A
P1L4956	102A
P1M	129
P1N	159
P1N-1	159
P1N-2	159
P1N-3	159
P1P	159
P1P-1	159
P1R	104
P1T	121
P1V	185
P1V-1	185
P1V-2	185
P1V-3	185
P1V-4	153
P1W	159
P1Y	127
P2A	159
P2A5	116
P2B	153
P2B5	116
P2C	104
P2C5	116
P2D	121
P2D5	116
P2DBLU	121
P2DBRN	121
P2DGRN	121
P2DORN	121
P2DRED	121
P2DYEL	121
P2E	159
P2F	176
P2G	159
P2GE	159
P2H	159
P2J	180
P2K	153
P2L	159
P2M-1	159
P2M-2	159
P2M-3	159
P2P	159
P2R	104
P2S	159
P2T	185
P2T-1	185
P2T-2	185
P2T-3	185
P2T-4	185
P2U	189
P2U-1	189
P2U-2	211
P2V	189
P2W	159
P2Y	159
P2Z	179
P3/2H	116
P3A	197
P3A5	116
P3B	158
P3B5	116
P3C	159
P3C5	116
P3CA	159
P3D	102A
P3D5	116
P3E	131
P3EBLK	104
P3EBLU	104
P3EGRN	104
P3ERED	104
P3H	127
P3J	127
P3K	189
P3M	185
P3N	185
P3N-1	185
P3N-2	185
P3N-3	185
P3N-4	185
P3N-5	183
P3P	185
P3P-1	185
P3P-2	185
P3P-3	185
P3P-4	185
P3P-5	185
P3R	131
P3R-1	131
P3R-2	131
P3R-3	131
P3R-4	131
P3S	185
P3T	131
P3T-1	131
P3T-2	131
P3U	197
P3UA	183
P3V	242
P3W	219
P3Y	189
P3Z	159
P4A5	116
P4B	193
P4B5	116
P4C	159
P4C5	116
P4D	104
P4D5	116
P4E	185
P4E-1	183
P4E-2	183
P4E-3	242
P4E-4	242
P4F	127
P4G	159
P4H	127
P4J	242
P4J148	152
P4K	159
P4L	104
P4M	121
P4N	104
P4P	159
P4R	159
P4S	185
P4T	183
P4U	185
P4V	185
P4V-1	185
P4V-2	183
P4W	153
P4W-1	185
P4W-2	185
P4Y	159
P4Z	128
P5A5	116
P5B	159
P5B5	116
P5C	159
P5C5	116
P5D	159
P5D5	116
P5F	242
P5H	153
P5L	185
P5R	185
P5S	242
P5U	153
P6/2H	116
P6A5	116
P6B5	116
P6C5	116
P6D5	116
P6KE6.8	4902
P6KE6.8A	4902
P6KE13	4918
P6KE13A	4918
P6KE13C	4919
P6KE13CA	4919
P6KE18	4926
P6KE18A	4926
P6KE18C	4927
P6KE18CA	4927
P6KE20	4928
P6KE20A	4928
P6KE20C	4929
P6KE20CA	4929
P6KE27	4934
P6KE27A	4934
P6KE27C	4935
P6KE27CA	4935
P6KE51	4950
P6KE51A	4950
P6KE51C	4951
P6KE51CA	4951
P6KE68	4958
P6KE68A	4958
P6KE68C	4959
P6KE68CA	4959
P6KE200	4988
P6KE200A	4988
P6KE200AC	4989
P6KE200C	4989
P6KE200CA	4989
P6RP8	125
P6RP10	125
P7A5	116
P7B5	116
P7C5	116
P7D5	116
P8/2H	116
P8B	153
P8H	153
P13T1	6402
P15	113A
P17	115
P19P01	522
P20	116
P32H	116
P61AM6116H	2128
P61LS00**H	74LS00
P61LS14**H	74LS14
P61LS32**H	74LS32
P61LS74**H	74LS74A
P61LS139*H	74LS139
P61LS373*H	74LS373
P61LS374*H	74LS374
P61XX0002	955M
P61XX0027	834
P62D1S1588	519
P62DIS1588	519
P62H	116
P62X020	290A
P62X011	116
P62X045	5312
P62X046	5312
P62X048	146A
P62X049	5005A
P67	106
P70D30U	6230
P70D40U	6230
P70D60U	6230
P70D80U	6230
P70D100U	6230
P70D120U	6230
P82H	116
P100	116
P100A	116
P100B	116
P100D	116
P100G	116
P100J	116

PART NUMBER	NTE REPLACEMENT
P101W	5700
P102W	5700
P103W	5700
P104W	5700
P105W	5700
P111W	5701
P112W	5701
P113W	5701
P114W	5701
P115W	5701
P131	5702
P132	5702
P133	5702
P134	5702
P135	5702
P141	5703
P142	5703
P143	5703
P144	5703
P145	5703
P150A	116
P150B	116
P150D	116
P150G	116
P150J	116
P161	5704
P162	5704
P163	5704
P164	5704
P165	5704
P171	5705
P172	5705
P173	5705
P174	5705
P175	5705
P200	116
P200CH12FK0	5381
P200CH12FK0	5381
P200PH06FN0	5374
P200PH12FN0	5375
P207B-4	2107
P214CH06FK0	5380
P218-1	188
P218-2	189
P300CH06FJ0	5386
P300CH06FJ0	5386
P300CH12FJ0	5387
P300GG1	116
P321	3098
P346	108
P400	116
P480A0018	128
P480A0022	159
P480A0023	159
P480A0027	159
P480A0028	123AP
P480A0029	123AP
P504	5940
P506	5940
P521	3081
P580	125
P600	116
P600A	5812
P600B	5812
P600D	5814
P600G	5814
P600J	5815
P600K	5817
P600M	5817
P621	3098
P621GB	3098
P800	125
P1000	125
P1000A	159
P1004	5942
P1004R	5853
P1006	5942
P1006R	5853
P1087	312
P1087E	326
P1110R	5891
P1172	177
P1172-1	177
P1901-48	199
P1901-50	123AP
P1901-70	159
P2004	5942
P2006	5942
P2010	5942
P2015	727
P2107A	2107
P2107A-2	2107
P2107A-4	2107
P2107A-6	2107
P2107B	2107
P2107B-2	2107
P2271	130
P2440	156
P3139	130
P3172	175
P3309	5079A
P4069	128
P4326	177
P5034	130
P5100	125
P5148	175
P5149	130
P5152	123AP
P5153	123AP
P6009	242
P6022A	175
P6128	175
P6500A	181
P6502B	6502
P6786	128
P6804	175
P7109	156
P7394	177
P7776	117
P8080A	8080A
P8214	8214
P8255A	8255
P8255A-5	8255
P8393	123AP
P8394	123AP
P8870	121
P8890	121
P8890A	121
P8890L	121
P9459	116
P9623	123AP
P9962-1	128
P9962-2	128
P9962-4	128
P9962-5	128
P10115	116
P10115A	125
P10155	109
P10156	116
P10156A	125
P10619-1	130
P12407-1	234
P15153	123AP
P21256	4256
P21256-10	4256
P21309	112
P21316	116
P21317	116
P21344	139A
P21443	116
P31898	121
P38103/507-10	145A
P50200-11	130
P64447	123AP
P69941	199
P75534	121
P75534-1	121
P75534-2	104
P75534-3	104
P75534-4	121
P75534-5	121
P633024	128
P633024G	128
P633567	123AP
P6450026	128
P6460006	102
P6460037	102
P6480001	121
P-6006	177
P-8393	123AP
P-10115	116
P-10954-1	130
P-10954-2	130
P-11748-1	128
P-11810-1	181
P-11901-1	130
P-11901-3	181
P-11903-1	128
P-31898	121
P-T-30	121
P/FTV/117	152
P/N14-603-02	161
P/N297L010C01	234
P/N10000020	123AP
PA070	116
PA069	116
PA071	116
PA3	116
PA9D522/1	166
PA200	116
PA239	721
PA300	116
PA305	116
PA305A	116
PA310	116
PA310A	116
PA315	116
PA315A	116
PA320	116
PA320A	116
PA320B	116
PA325	116
PA325A	116
PA325B	116
PA330	116
PA330A	116
PA330B	116
PA340	116
PA340A	116
PA340B	116
PA350	116
PA350A	116
PA360	116
PA360A	116
PA380	125
PA400	116
PA600	116
PA1000	159
PA1001	159
PA1001A	159
PA7000/591	909D
PA7001/0001	123AP
PA7001/501	909
PA7001/502	909D
PA7001/503	941
PA7001/505	923
PA7001/518	7430
PA7001/519	7420
PA7001/520	7410
PA7001/521	7400
PA7001/522	7440
PA7001/523	7451
PA7001/524	7453
PA7001/525	7402
PA7001/526	7401
PA7001/527	7404
PA7001/528	7405
PA7001/529	7474
PA7001/530	7470
PA7001/531	7473
PA7001/532	7472
PA7001/533	7460
PA7001/539	7454
PA7001/591	909D
PA7001/593	74145
PA7615	116
PA7703	703
PA7703E	703
PA7703X	703
PA7709	909
PA7709C	909
PA7710-31	910
PA7710-39	910
PA7711-31	911
PA7741	941
PA7741C	941
PA8260	199
PA8261	145A
PA8543	199
PA8645	116
PA8900	186
PA9004	199
PA9005	199
PA9006	123AP
PA9154	160
PA9155	160
PA9156	102A
PA9157	102A
PA9158	158
PA9160	116
PA9267	137A
PA9483	192
PA10556	116
PA10880	160
PA10887	116
PA10889-1	158
PA10889-2	158
PA10890	104
PA10890-1	121
PA-069	116
PA-3	116
PA-320	116
PA-320A	116
PA-320B	116
PA-10556	108
PA-10889-1	121
PA-10889-2	121
PA-10890	121
PA-10890-1	121
PAD720	160
PAD721	160
PAD722	160
PAD723	160
PAD724	160
PADT25	160
PADT26	160
PADT27	160
PADT28	160
PADT30	160
PADT31	160
PADT35	160
PADT40	160
PADT50	104
PADT51	160
PAR12	121
PAR-12	121
PB110	121
PB151M	5304
PB401	5312
PB-99S005	126
PBC107	199
PBC107A	199
PBC107B	199
PBC108	199
PBC108A	199
PBC108B	199
PBC108C	199
PBC109	199
PBC109B	199
PBC109C	199
PBC182	108
PBC183	123AP
PBC184	192
PBD352301	2011
PBD352302	2012
PBD352303	2013
PBDF101	5332
PBDF102	5332
PBDF103	5332
PBDF104	5332
PBDF105	5332
PBDF106	5334
PBDF107	5334
PBE3014-1	158
PBE3014-2	158
PBE3020-1	158
PBE3020-2	103A
PBE3162	158
PBE3162-1	102A
PBE3162-2	102A
PBE3322	109
PBL301	5318
PBL302	5318
PBL303	5318
PBL304	5319
PBL305	5319
PBL306	5320
PBL307	5320
PBL401	5318
PBL402	5318
PBL403	5318
PBL404	5319
PBL405	5319
PBL406	5320
PBL407	5320
PBM74LS30P	74LS30
PBM74LS74AP	74LS74A
PBM74LS86P	74LS86
PBM74LS244P	74LS244
PBM74LS393P	74LS393
PBM101	5304
PBM102	5304
PBM103	5304
PBM104	5304
PBM105	5305
PBM106	5306
PBM107	5307
PBM151	5304
PBM152	5304
PBM153	5304
PBM154	5304
PBM155	5305
PBM156	5306
PBM157	5307
PBP151	166
PBP152	166
PBP153	167
PBP154	168
PBP155	169
PBP156	170
PBP157	170
PBP201	166
PBP202	166
PBP203	167
PBP204	168
PBP205	169
PBP206	170
PBP207	170
PBPC801	5312
PBPC802	5312
PBPC803	5313
PBPC804	5314
PBPC805	5315
PBPC806	5316
PBPC807	5317
PBU601	5329
PBU602	5329
PBU603	5329
PBU604	5330
PBU605	5330
PBX103	102
PBX113	102
PC02P1/2	116
PC0211/2	116
PC503	3040
PC554	1142
PC563H2	1081A
PC574J	615P
PC713	3041
PC713U	3041
PC810	3098
PC812	3098
PC816	3098
PC817	3098
PC817-B	3098
PC817B	3098
PC817C	3098
PC818	3098
PC847	3098
PC1026C	1226
PC1066T	158
PC1067T	158
PC1068T	158
PC1879-004	140A
PC3002	158
PC3003	158
PC3004	121
PC3005	158
PC3006	158
PC3007	158
PC3009	158
PC3010	131
PC4004	116
PC4558C	778A
PC4900-1	128
PC7805H	960
PC7805HF	960
PC7812HF	966
PC20003	1003
PC-20003	1003
PC-20005	1027
PC-20006	1024
PC-20007	1006
PC-20015	812
PC-20023	1010
PC-20024	722
PC-20030	722
PC-20046	824
PC-20066	743
PC-20069	1060
PC-20082	1217
PC-20087	2060
PC-20108	2060
PC-20143	2060
PCMB74LS00M	74LS00
PCMB74LS02M	74LS02
PCMB74LS04N	74LS04
PCMB74LS05M	74LS05
PCMB74LS10M	74LS10
PCMB74LS32M	74LS32
PD60	156
PD80	156
PD100	156
PD101	116
PD102	116
PD103	116
PD104	116
PD105	116
PD106	116
PD107	116
PD107A	116
PD108	116
PD110	116
PD111	116
PD114	125
PD115	125
PD116	125
PD122	116
PD125	116
PD129	116
PD130	116
PD131	116
PD132	116
PD133	116
PD134	116
PD135	116
PD137	177
PD154	116
PD155	116
PD910	116
PD913	125
PD914	125
PD915	125
PD916	125
PD1011	166
PD1020	169
PD4066BC	4066B
PD6000	5002A
PD6000A	5002A
PD6002	5005A
PD6002A	134A
PD6003	134A
PD6003A	134A
PD6004	134A
PD6004A	134A
PD6006	135A
PD6006A	135A
PD6007	135A
PD6007A	135A
PD6008	136A
PD6008A	136A
PD6009	137A
PD6009A	137A
PD6010	5014A
PD6010A	5014A
PD6012	5016A
PD6012A	5016A
PD6013	139A
PD6013A	139A
PD6014	140A
PD6014A	140A
PD6016	142A
PD6016A	142A
PD6018	145A
PD6018A	145A
PD6020	5027A
PD6020A	5027A
PD6041	5002A
PD6043	5005A
PD6044	134A
PD6045	134A
PD6047	135A
PD6048	135A
PD6049	136A
PD6049C	136A
PD6050	137A
PD6051	5014A
PD6053	5016A
PD6054	139A
PD6055	140A
PD6057	142A
PD6059	145A
PD6061	5027A
PD9093-59	9093
PD9094-59	9094
PD9097-59	9097
PD9099-59	9099
PD9930-59	9930
PD9932-59	9932
PD9933-59	9933
PD9935-59	9935
PD9936-59	9936
PD9937-59	9937
PD9944-59	9944
PD9945-59	9945
PD9946-59	9946
PD9948-59	9948
PD9949-59	9949
PD9950-59	9950
PD9951-59	9951
PD9961-59	9961
PD9962-59	9962
PD9963-59	9963
PD-1567	169
PD-6018	145A
PD-6018A	145A
PD-6059	145A
PE401	116
PE401N	116
PE402	116
PE403	116
PE404	116
PE405	116
PE406	116
PE408	125
PE410	125
PE502	116
PE504	116
PE506	116
PE508	125
PE510	125
PE3001	123AP
PE3015	123AP
PE5010	123AP
PE5013	123AP
PE5025	233
PE5029	229
PE5031	107
PE7058	287
PE7059	287
PE8050B	293
PE8550B	294
PE9093-59	9093
PE9094-59	9094
PE9097-59	9097
PE9099-59	9099
PE9930-59	9930
PE9932-59	9932
PE9933-59	9933
PE9935-59	9935
PE9936-59	9936
PE9937-59	9937
PE9944-59	9944
PE9945-59	9945
PE9946-59	9946
PE9948-59	9948
PE9949-59	9949
PE9950-59	9950
PE9951-59	9951
PE9961-59	9961
PE9962-59	9962
PE9963-59	9963
PE-401	116
PEP2	123AP
PEP5	123AP
PEP6	123AP
PEP7	123AP
PEP8	123AP
PEP9	123AP
PEP95	172A
PEP1001	108
PEP2001	128
PET1001	192
PET1002	123AP
PET1075	108
PET1075A	154
PET2001	123AP
PET2002	123AP
PET3001	108
PET3704	123AP
PET3705	123AP
PET3706	123AP
PET4001	123A
PET4002	123AP
PET4003	199
PET6001	123AP
PET6002	123AP
PET8000	123AP
PET8001	123AP
PET8002	123AP
PET8003	123AP
PET8004	123AP
PET8201	108
PET8250	108
PET8251	108
PET8300	108
PET9002	123AP
PET9021	128
PET9022	128
PET-101-1	108
PF10HZ	156
PF-AR15	130
PF-AR18	175
PFZ6V8	4902
PFZ6V8A	4902
PFZ13	4918
PFZ13A	4918
PFZ18	4926
PFZ18A	4926
PFZ20	4928
PFZ20A	4928
PFZ27	4934
PFZ27A	4934
PFZ51	4950
PFZ51A	4950
PFZ68	4958
PFZ68A	4958
PFZ200	4988
PFZ200A	4988
PG1992	519
PG33024G	128
PGR-24	5802
PH05	5329
PH9-221	166
PH9D5	125
PH9D522/1	169
PH9D522M	166
PH9D5221	166
PH9DS22	116
PH9DS221	166
PH10	5329
PH20	5329
PH25C22	116
PH25C22/1	116
PH25C22/21	116
PH25C221	166
PH40	5330
PH60	5330
PH80	5331
PH100	5331
PH108	506
PH109	125
PH204	116
PH208	116
PH302	3033
PH404	116
PH1021	116
PH-108	116
PI-10,131	159
PIC	159
PIK	121
PIL/4956	160
PIT-37	199
PIT-50	159
PIT-74	128
PIT-79	159
PIT-81	159
PIV	197
PIV-1	197
PIV-2	197
PIV-3	197
PKBPC35/02	5340
PKBPC35/06	5342
PKBPC35/100	5344
PL4V3Z	5068A
PL51Z	5089A
PL56Z	5090A
PL75Z	5093A
PL91Z	5095A
PL100Z	5096A
PL102	1167
PL110Z	151A
PL130Z	5098A
PL160Z	5101A
PL180Z	5103A
PL293	1749
PL1021	161
PL1022	161
PL1023	161
PL1024	107
PL1025	107
PL1026	107
PL1031	159
PL1032	194
PL1033	159
PL1034	159
PL1051	108
PL1052	123AP
PL1053	108
PL1054	123AP
PL1055	108
PL1061	108
PL1062	108
PL1063	108
PL1064	108
PL1065	108
PL1066	161
PL1067	161
PL1081	108
PL1082	108
PL1083	128
PL1084	128
PL1085	171
PL1091	132
PL1092	132
PL1093	132
PL1094	132
PL1101	159
PL1102	159
PL1103	159
PL1104	159
PL1111	161
PL1112	161
PL1113	107
PL4021	123AP
PL4031	106
PL4032	106
PL4033	106
PL4034	106
PL4051	123AP
PL4052	123AP
PL4053	123AP
PL4054	123AP
PL4055	123AP
PL4061	199
PL4062	199
PL-150-001-9-005	109
PL-150-006-9-001	109
PL-150-040-9-002	177
PL-151-030-9-005	116
PL-151-030-9-001	177
PL-151-040-9-003	116
PL-151-040-9-001	177
PL-151-040-9-002	177
PL-151-032-9-004	177
PL-151-035-9-001	177
PL-151-045-9-001	116
PL-151-045-9-004	116
PL-151-045-9-002	177
PL-151-045-9-003	506
PL-152-042-9-001	5072A
PL-152-044-9-001	139A
PL-152-047-9-001	137A
PL-152-051-9-001	139A
PL-152-052-9-002	137A
PL-152-054-9-001	5072A
PL-154-001-9-001	614
PL-172-010-9-001	152

PART NUMBER	NTE REPLACEMENT
PL-172-013-9001	236
PL-172-014-9-001	152
PL-172-024-9-002	235
PL-172-024-9-004	186A
PL-172-024-9-003	236
PL-172-024-9-001	186
PL-176-025-9-001	199
PL-176-026-9-001	107
PL-176-029-9-001	123AP
PL-176-029-9-002	195A
PL-176-031-9-002	199
PL-176-031-9-001	289
PL-176-037-9-001	107
PL-176-042-9-002	123AP
PL-176-042-9-005	186
PL-176-042-9-001	229
PL-176-042-9-003	107
PL-176-042-9-006	123AP
PL-176-042-9-004	123AP
PL-176-047-9-002	319P
PL-176-047-9-001	289
PL-176-049-9-002	107
PL-177-006-9-002	290
PL-177-006-9-001	159
PL-182-009-9-001	132
PL-182-014-9-002	123AP
PL-307-007-9-002	1102
PLE37	185
PLE52	184
PLE-48	152
PLL02	1167
PLL02A	1167
PLL02A-C	1233
PLL02A-F	1233
PLL02A-G	1233
PLL02AG	1233
PLZ52	184
PM194	107
PM195	107
PM195A	108
PM1120	234
PM1121	123AP
PMBTA63	2405
PMBTA64	2405
PMC-QP0010	130
PMC-QP0040	181
PMC-QP0012	130
PMC-QS-0400	128
PMC-QS-0280	129
PMC-QS-0320	128
PMD10K40	247
PMD10K60	247
PMD10K80	247
PMD10K100	247
PMD11K40	248
PMD11K60	248
PMD11K80	248
PMD11K100	248
PMD12K40	247
PMD12K60	247
PMD12K80	247
PMD12K100	247
PMD13K40	248
PMD13K60	248
PMD13K80	248
PMD13K100	248
PMD16K60	251
PMD16K80	251
PMD16K100	251
PMD17K60	252
PMD17K80	252
PMD17K100	252
PMD1601	251
PMD1601K	251
PMD1602	251
PMD1602K	251
PMD1603	251
PMD1603K	251
PMD1701	252
PMD1701K	252
PMD1702	252
PMD1702K	252
PMD1703	252
PMD1703K	252
PMR27K050	6200
PMR27K100	6200
PMR27K200	6200
PMT1767	108
PN1SOTV	3120
PN26	175
PN66	152
PN70	106
PN71	106
PN72	159
PN107	123AP
PN108	123AP
PN109	123AP
PN140	3038
PN150	3120
PN150NV	3120
PN204	116
PN313	3033
PN350	130
PN917	108
PN918	108
PN929	199
PN930	199
PN2218	123AP
PN2218A	123AP
PN2219	123AP
PN2219A	123AP
PN2221	123AP
PN2221A	123AP
PN2222	123AP
PN2222A	123AP
PN2368	123A
PN2369	123AP
PN2369A	123AP
PN2484	123AP
PN2904	159
PN2904A	159
PN2905	159
PN2905A	159
PN2906	159
PN2906A	159
PN2907	159
PN2907A	159
PN3563	108
PN3564	108
PN3565	123AP
PN3566	123AP
PN3567	123AP
PN3568	128
PN3569	123AP
PN3638	159
PN3638A	159
PN3639	106
PN3641	123AP
PN3642	123AP
PN3643	123AP
PN3644	159
PN3644-5	129
PN3645	159
PN3645-5	129
PN3646	123AP
PN4121	159
PN4122	159
PN4140	123AP
PN4141	123AP
PN4142	159
PN4143	159
PN4207	106
PN4248	159
PN4249	159
PN4250A	159
PN4257	106
PN4257A	106
PN4258	159
PN4258A	106
PN4274	123AP
PN4313	106
PN4354	159
PN4355	159
PN4356	159
PN4888	288
PN4889	288
PN4916	159
PN4917	159
PN4945	123AP
PN4969	123AP
PN4970	123AP
PN5127	123AP
PN5128	123AP
PN5129	123AP
PN5130	108
PN5131	123AP
PN5132	123AP
PN5135	123AP
PN5136	123AP
PN5137	123AP
PN5138	159
PN5140	106
PN5141	106
PN5142	159
PN5143	159
PN5179	108
PN5855	159
PN5856	123AP
PN5857	159
PN5910	106
PN5964	194
PN5965	194
PN7055	287
PO93	109
PO100-01	5348
PO100-02	5348
PO100-04	5348
PO100-06	5348
PO551	2764
PO561	2764
POSN74LS14N	74LS14
POSN74LS123N	74LS123
POSN74LS138N	74LS138
POSN74LS153N	74LS153
POSN74LS157N	74LS157
POSN74LS161AN	74LS161A
POSN74LS166N	74LS166
POSN74LS221N	74LS221
POSN74LS245N	74LS245
POSN74LS368AN	74LS368
POSN74LS373N	74LS373
POSN7416N	7416
POSN7417N	7417
POSN7445N	7445
POSN74145N	74145
POWER-12	121
POWER-25	121
POWER-40	105
POWER-60	105
POWER-80	105
POWER-99	121
POWER-299	121
POWER12	121
POWER25	121
POWER40	105
POWER60	105
POWER80	105
POWER99	121
POWER299	121
POWER500	105
PP3000	130
PP3001	181
PP3003	130
PP3004	181
PP3006	130
PP3007	181
PP3250	152
PP3310	152
PP3312	152
PPR1006	186
PPR1008	186
PQ27	160
PQ28	158
PQ29	158
PQ30	160
PQ31	104
PR3-3	131
PR121	506
PR141	506
PR515	135A
PR605	135A
PR617	142A
PR620	145A
PR804	135A
PR9010R	5891
PR1001	552
PR1002	552
PR1003	552
PR1004	552
PR1005	552
PR1006	552
PR3001	580
PR3002	580
PR3003	580
PR3004	580
PR3005	580
PR5400	5801
PR5401	5802
PR5402	5804
PR5403	5804
PR5404	5806
PR5405	5806
PR5406	5808
PR5407	5809
PR9000	5846
PR9000R	5847
PR9001	5846
PR9001R	5847
PR9002	5848
PR9002R	5849
PR9003	5848
PR9003R	5849
PR9004	5866
PR9004R	5867
PR9005	5866
PR9005R	5867
PR9006	5868
PR9006R	5869
PR9007	5868
PR9007R	5869
PR9008	5886
PR9008R	5887
PR9009	5886
PR9009R	5887
PR9010R	5891
PR9011	5890
PR9011R	5891
PR9012	5998
PR9012R	5999
PR9013	5998
PR9013R	5999
PR9014	6002
PR9014R	6003
PR9015	6002
PR9015R	6003
PR9023	5998
PR9024	5998
PR9025	6002
PR9026	6002
PR9034	6020
PR9034R	6021
PR9035	6022
PR9035R	6023
PR9036	6026
PR9036R	6027
PR9037	6030
PR9037R	6031
PR9038	6034
PR9038R	6035
PR9039	6038
PR9039R	6039
PR9040	6040
PR9040R	6041
PR9041	6042
PR9041R	6043
PR9042	6042
PR9042R	6043
PR9043	6044
PR9043R	6045
PR9044	6044
PR9044R	6045
PR-620	145A
PRS3017	135A
PRT101	154
PRT-101	123AP
PRT-104	123AP
PRT-104-1	123AP
PRT-104-2	123AP
PRT-104-3	123AP
PRT-104-4	128
PS005	116
PS010	116
PS020	116
PS030	116
PS040	116
PS050	116
PS060	116
PS015	116
PS025	116
PS035	116
PS035(SCR)	5517
PS1	121
PS63A205	519
PS105	116
PS110	116
PS120	116
PS125	116
PS130	116
PS135	116
PS135(SCR)	5517
PS140	116
PS150	116
PS152RL	506
PS160	116
PS235	5517
PS335	5518
PS405	116
PS410	116
PS415	116
PS420	116
PS425	116
PS430	116
PS435	116
PS440	116
PS450	116
PS460	116
PS603	116
PS604	116
PS605	116
PS609	116
PS610	116
PS611	116
PS615	116
PS616	116
PS617	116
PS620	5516
PS621	116
PS622	116
PS623	116
PS627	116
PS628	116
PS629	116
PS632	116
PS633	116
PS636	116
PS637	116
PS700	177
PS720	177
PS1140	125
PS1176	5062A
PS1176A	5062A
PS1325	137A
PS1511	140A
PS1512	140A
PS1513	140A
PS1514	140A
PS1515	140A
PS1516	140A
PS1517	140A
PS2001	3042
PS2001B	3042
PS2003	3042
PS2021	3041
PS2207	116
PS2208	116
PS2209	116
PS2247	116
PS2249	116
PS2346	156
PS2347	156
PS2411	116
PS2412	116
PS2413	116
PS2415	116
PS2416	125
PS2417	125
PS3534	5001A
PS3534A	5001A
PS4559	116
PS4560	116
PS4725	116
PS5300	116
PS5301	116
PS5302	116
PS6010-1	199
PS6325	150A
PS6465	5002A
PS6468	135A
PS8901	5005A
PS8903	134A
PS8905	135A
PS8906	135A
PS8907	136A
PS8908	137A
PS8909	5014A
PS8911	5016A
PS8912	139A
PS8913	140A
PS8915	142A
PS8917	145A
PS8919	5027A
PS10019B	139A
PS10022B	142A
PS10024B	145A
PS10063	139A
PS10066	142A
PS10068	145A
PS11327	124
PS30802	519
PS209800	123AP
PS-040	116
PS-060	116
PS-025	116
PS-035	116
PS-1	121
PS-120	116
PS-801	923D
PS-8917	145A
PS-10068	145A
PT040	5688
PT0-139	102A
PT06	121
PT015	5688
PT025	5688
PT0139	158
PT2A	160
PT2S	160
PT3	121
PT3A	121
PT4	155
PT4-2268-01B	519
PT4-2268-011	519
PT4-2287-01	177
PT4-2311-011	519
PT4-7158	123AP
PT4-7158-01A	123AP
PT4-7158-02A	123AP
PT4-7158-012	123AP
PT4-7158-013	123AP
PT4-7158-021	123AP
PT4-7158-022	123AP
PT4-7158-023	123AP
PT5	116
PT5B	116
PT6	121
PT6D22-1	166
PT6D22/1	166
PT9C22/1	125
PT12	121
PT25	121
PT30	121
PT32	131
PT40	121
PT50	121
PT115	5688
PT125	5688
PT140	5688
PT150	121
PT155	121
PT176	121
PT201	105
PT215	5688
PT225	5688
PT234	121
PT235	121
PT235A	104
PT236	104
PT236A	104
PT236B	121
PT236C	121
PT240	5688
PT242	121
PT250	105
PT255	121
PT256	121
PT285	121
PT285A	121
PT301	121
PT301A	121
PT307	121
PT307A	121
PT315	5689
PT325	5689
PT336B	104
PT340	5689
PT366B	121
PT415	5689
PT425	5689
PT440	5689
PT440AB	5689
PT501	121
PT505	5800
PT510	116
PT510(TRIAC)	5690
PT515	105
PT515(SEMITRON)	213
PT520	5802
PT525	5804
PT525(TRIAC)	5690
PT530	102A
PT530(TRIAC)	5690
PT530A	102A
PT540	5804
PT550	116
PT554	104
PT555	121
PT560	116
PT580	125
PT600	186
PT601	186
PT610	5690
PT612	128
PT615	5690
PT625	5690
PT627	123AP
PT630	5690
PT665	152
PT703	123AP
PT720	123AP
PT850	128
PT850A	128
PT851	123AP
PT855	160
PT856	160
PT857	195A
PT886	123AP
PT887	123AP
PT888	128
PT896	128
PT897	123AP
PT898	123AP
PT1515	198
PT1537	195A
PT1544	128
PT1545	128
PT1558	123AP
PT1559	123AP
PT1610	123AP
PT1835	123AP
PT1836	123AP
PT1837	123AP
PT1941	130
PT2040A	195A
PT2523	171
PT2524	171
PT2525	171
PT2525A	198
PT2540	192
PT2620	186
PT2630	198
PT2635	152
PT2640	186
PT2660	186
PT2670	198
PT2677C	224
PT2760	123AP
PT2896	123AP
PT3141	123AP
PT3141A	123AP
PT3141B	123AP
PT3141C	195A
PT3151A	123AP
PT3151B	123AP
PT3151C	123AP
PT3161C	348
PT3161D	349
PT3168E	350
PT3195A	357
PT3195C	359
PT3500	123AP
PT3501	473
PT3502	128
PT3503	186
PT3538	76
PT4150A	362
PT4150B	363
PT4531	362
PT4534	364
PT4690	186
PT4800	123AP
PT4816	107
PT4830	107
PT5590	349
PT5693	152
PT5701	473
PT6022/1	169
PT6618	186
PT6669	186
PT6696	186
PT7930	181
PT7931	181
PT8740A	472
PT8743	364
PT8769	350
PT8809	362
PT8810	363
PT8811	364
PT8837	350
PT8851(FLANGE)	338F
PT8851(STUD)	338
PT8851A	338
PT8852	338F
PT8852A	338
PT8853	339
PT8854	333
PT8854A	334
PT8864A	345
PT8865	334
PT8866	341
PT8873	350F
PT8874F	320F
PT8876A	345
PT8877	341
PT9731	359
PT9732	357
PT9733	360
PT9776	333
PT9776(FLANGE)	333
PT9776(STUD)	334
PT9776A	334
PT9784(FLANGE)	333
PT9784A(STUD)	334
PT9785	470
PT9797	335
PT9797A	336
PT9803(FLANGE)	333
PT9803(STUD)	334
PT9841	336
PT9841(FLANGE)	335
PT9841(STUD)	336
PT31961	195A
PT40063	519
PT72130	116
PT-029	186A
PT-3	116
PT-3A	121
PT-5B	116
PT-6	121
PT-12	121
PT-25	121
PT-40	121
PT-50	121
PT-150	121
PT-155	121
PT-176	121
PT-234	121
PT-235	121
PT-235A	121
PT-236	121
PT-236A	121
PT-236B	121
PT-242	121
PT-255	121
PT-256	121
PT-285	121
PT-285A	121
PT-301	121
PT-301A	121
PT-307	121
PT-307A	121
PT-501	105
PT-505	116
PT-510	116
PT-515	116
PT-520	116
PT-525	116
PT-530	116
PT-530A	100
PT-540	116
PT-550	116
PT-554	121
PT-555	121
PT-560	116
PT-72130-1	5804
PTC101	128
PTC102	100
PTC103	159
PTC104	124
PTC105	121
PTC106	105
PTC107	160
PTC108	101
PTC109	102
PTC110	184
PTC111	185
PTC112	175
PTC113	218
PTC114	104
PTC115	123AP
PTC116	181
PTC117	154
PTC118	162
PTC119	130
PTC120	131
PTC121	123AP
PTC122	127
PTC123	194
PTC124	228A
PTC125	194
PTC126	161
PTC127	194
PTC129	163A
PTC129A	165
PTC130	164
PTC131	159
PTC132	161
PTC134	103A
PTC135	158
PTC136	123AP
PTC137	182
PTC138	179
PTC139	123AP
PTC140	130
PTC141	189
PTC142	187
PTC143	186
PTC144	224
PTC146	165
PTC147	179
PTC151	132
PTC152	132
PTC153	172A
PTC156	158
PTC158	195A
PTC160	160
PTC161	132
PTC172	180
PTC173	181
PTC176	224
PTC177	193
PTC178	192
PTC181	222
PTC186	236
PTC191	195A
PTC201	5804
PTC202	116
PTC203	125
PTC204	156
PTC205	125
PTC206	109
PTC206M	109
PTC207	109
PTC207M	109
PTC208	118
PTC211	503
PTC212	505
PTC213	505
PTC214	135A

PART NUMBER	NTE REPLACEMENT
PTC214M	177
PTC215	135A
PTC216	506
PTC217	112
PTC218	173BP
PTC401	168
PTC402	169
PTC403	116
PTC404	120
PTC406	178MP
PTC407	113A
PTC410	94
PTC411	94
PTC413	385
PTC423	385
PTC501	134A
PTC502	136A
PTC503	137A
PTC504	138A
PTC505	139A
PTC506	140A
PTC507	142A
PTC508	143A
PTC509	145A
PTC510	5077A
PTC511	144A
PTC512	147A
PTC513	5090A
PTC514	149A
PTC515	150A
PTC516	151A
PTC517	5086A
PTC518	5088A
PTC519	283
PTC520	283
PTC603	522
PTC701	708
PTC703	709
PTC715	714
PTC717	721
PTC721	722
PTC726	712
PTC734	744
PTC754	1004
PTC862	6006
PTC864	6008
PTC866	6010
PTC2677C	195A
PTC6000	98
PTC6001	98
PTC6002	98
PTC6003	98
PTC6022	99
PTC6023	99
PTC6060	98
PTC6061	98
PTC6062	98
PTC6063	98
PTC6073	99
PTC7000	99
PTC7001	99
PTC7002	99
PTC10000	98
PTC10002	97
PTC10003	97
PTC10004	98
PTC10005	98
PTC10006	97
PTC10007	97
PTC10008	98
PTC10009	98
PTC10015	99
PTC10022	99
PTC10023	99
PTG132	161
PTO139	102A
PTO-6	121
PTSN7416N	7416
PTSN7417N	7417
PU6C22	116
PV8	116
PV-8	116
PWM25	1721
PX6A01	5812
PX6A02	5812
PX6A03	5814
PX6A04	5814
PX6A05	5815
PX6A06	5817
PX6A07	5817
PXB103	102
PXB113	102
PXB-103	102A
PXB-113	102A
PXC101	102
PXC101A	102
PXC101AB	102
PXC-101	102A
PXC-101AB	102A
PY-5	116
PZ10A	5186A
PZ18A	5194A
PZ22A	5197A
PZT18	5194A
PZT22	5197A
PZT27	5200A
PZT33	5203A
PZW	5070A
Q0-419	159
Q0V60526	102A
Q0V60527	103A
Q0V60528	102A
Q0V60529	123AP
Q0V60530	123AP
Q0V60537	103A
Q0V60538	123AP
Q0415	159
Q1-7C	102A
Q1/6515	107
Q1B	116
Q1H	116
Q2-7C	102A
Q2/6515	107
Q2N406	102A
Q2N1526	126
Q2N2428	102A
Q2N2613	102A
Q2N4105	103A
Q2N4106	158
Q2N4107(NPN)	103A
Q2N4107(PNP)	102A
Q2N4107(UPN)	103A
Q2T2907	2322
Q3/2	116
Q3/6515	123AP
Q4	102A
Q4/6515	107
Q4B	116
Q5	161
Q6	158
Q6/2	116
Q6/6515	107
Q7-C1318XDN	128
Q7/6515	102A
Q8/2	116
Q8/6515	102A
Q9/6515	126
Q11/6515	102A
Q12/6515	102A
Q16	158
Q32	116
Q49	109
Q51	109
Q52	116
Q53	116
Q54	116
Q55	116
Q56	116
Q57	116
Q58	116
Q59	116
Q60	116
Q62	116
Q82	116
Q200E3	5655
Q200E4	5655
Q205(DYNACO)	722
Q400E3	5656
Q400E4	5656
Q501	123AP
Q502	123AP
Q503	165
Q510ZQ	106
Q5120R	199
Q514Z	165
Q602	159
Q603	159
Q604	194
Q606	123AP
Q607	159
Q701	123AP
Q2001L3	5638
Q2001L4	5638
Q2001LT	5646
Q2001M4	5651
Q2001MS2	5642
Q2001PT	5641
Q2003L3	5638
Q2003L4	5638
Q2003LT	5646
Q2004F31	5629
Q2004F41	5629
Q2004L3	5638
Q2004LT	5646
Q2006LT	5646
Q2008LT	5646
Q2010L4	5645
Q2010LT	5646
Q2010R4	5633
Q2012R5	56004
Q2015L5	56004
Q2015R5	56004
Q2025C	5679
Q2025D	56022
Q2025H	5693
Q2025J6	56030
Q2025K6	56030
Q2025L6	56019
Q2025P	5679
Q2025R5	56015
Q2040C	5679
Q2040D	56022
Q2040J7	56030
Q2040K7	56030
Q2040P	5679
Q2040W7	56033
Q4001L3	5638
Q4001L4	5638
Q4001LT	5646
Q4003L3	5638
Q4003L4	5638
Q4004F31	5629
Q4004F41	5629
Q4004L3	5638
Q4004LT	5646
Q4006L4	5638
Q4006LT	5646
Q4008LT	5646
Q4010L4	5645
Q4010LT	5646
Q4010R4	5635
Q4012R5	56006
Q4015R5	56006
Q4025D	56024
Q4025H	5695
Q4025J6	56030
Q4025K6	56030
Q4025L5	56020
Q4025L6	56020
Q4025P	5679
Q4040C	5679
Q4040D	56024
Q4040J7	56030
Q4040K7	56030
Q4040P	5679
Q4040W7	56033
Q4528BR	4528B
Q5004LT	5646
Q5006LT	5646
Q5010L4	5645
Q5010LT	5646
Q5010R4	5636
Q5012R5	56008
Q5015L5	56008
Q5015R5	56008
Q5025C	5679
Q5025D	56026
Q5025G	5690
Q5025J6	56031
Q5025K6	56031
Q5025P	5679
Q5025R5	56017
Q5030	127
Q5039	103A
Q5040C	5679
Q5040D	56026
Q5040J7	56031
Q5040K7	56031
Q5040P	5679
Q5040W7	56033
Q5044	160
Q5050	103A
Q5053	85
Q5053A	199
Q5053C	123AP
Q5053D	199
Q5053E	199
Q5053F	199
Q5053G	199
Q5073D	123AP
Q5073E	123AP
Q5073F	123AP
Q5075C	124
Q5075CLY	124
Q5075D	124
Q5075DLY	124
Q5075DXY	124
Q5075E	124
Q5075ELY	124
Q5075EXY	124
Q5075F	124
Q5075FXY	124
Q5075K	124
Q5075X	124
Q5075Y	124
Q5075ZMY	124
Q5077	290A
Q5077A	290A
Q5077E	290A
Q5077EA	290A
Q5077F	159
Q5078Z	199
Q5083B	130
Q5083C	162
Q5087Z	159
Q5094Z	164
Q5095ZEE	164
Q5099E	128
Q5099F	128
Q5100A	129
Q5101D	175
Q5102	290A
Q5102A	290A
Q5102P	234
Q5102Q	234
Q5102QA	290A
Q5102R	234
Q5102S	290A
Q5104K	124
Q5104Z	124
Q5104ZXF	124
Q5110Z	130
Q5111ZK	165
Q5113ZLM	124
Q5113ZMM	124
Q5113ZMY	124
Q5116C	290
Q5116CA	106
Q5119	162
Q5119D	163A
Q5120P	162
Q5120Q	162
Q5120R	162
Q5121	199
Q5121O	199
Q5121Q	199
Q5121R	199
Q5123E	123AP
Q5123F	123AP
Q5124	297
Q5134Z	175
Q5135	159
Q5135-0Y	194
Q5137BA	291
Q5137CA	291
Q5138	198
Q5138K	198
Q5138L	198
Q5138M	198
Q5140XP	165
Q5140Z	165
Q5140ZX-0	165
Q5140ZX-O	165
Q5140ZXP	165
Q5140ZXQ	165
Q5140ZXR	165
Q5141ZM	198
Q5160	297
Q5160-0	198
Q5160-O	198
Q5160R	198
Q5160Y	198
Q5161Z	238
Q5163D	198
Q5175	198
Q5175DXV	376
Q5175TM	198
Q5178	198
Q5180	199
Q5182	123AP
Q5183	85
Q5183C	289
Q5183P	199
Q5196	294
Q5199	162
Q5205	290
Q5206	162
Q5207	238
Q5207Z	165
Q5209	294
Q5210	287
Q5217	154
Q6004LT	5646
Q6006LT	5646
Q6008LT	5646
Q6010L5	5645
Q6010LT	5646
Q6010R5	56008
Q6012R5	56008
Q6015L5	56008
Q6015R5	56008
Q6025D	56026
Q6025G	5690
Q6025J6	56031
Q6025K6	56031
Q6025P	5679
Q6025R5	56017
Q6040C	5679
Q6040D	56026
Q6040J7	56031
Q6040K7	56031
Q6040P	5679
Q6040W7	56033
Q6521	288
Q6522	288
Q6526Z	399
Q6531	399
Q6531ZM	399
Q6536	399
Q6536Q	399
Q6536R	399
Q6541	399
Q6541ZM	399
Q6543	399
Q6543A	399
Q6562	290A
Q6562G	290A
Q6565	85
Q6582Z	107
Q6597	89
Q6597Z	89
Q6609	376
Q6609Z	376
Q6640Z	52
Q6649	373
Q6649Z	373
Q6650	374
Q6650Z	374
Q6651Z	89
Q6697	459
Q6780	319P
Q6780Z	319P
Q6783Z	157
Q6784	157
Q6785	89
Q6793	382
Q6803	399
Q6805	157
Q6805R	157
Q6831	53
Q7219	778A
Q7227	1538
Q7227R	1538
Q7256	1658
Q7293	1548
Q7296	1548
Q7327A	4053B
Q7350	74LS86
Q7372A	4053B
Q7393	4013B
Q7402	74LS86
Q7406	4052B
Q7448	4053B
Q7478A	4066B
Q7652	4066B
Q7653A	4066B
Q7668	1217
Q7682	1576
Q7748	1227
Q8010R5	56010
Q8012R5	56010
Q8266R	289A
Q8266S	289A
Q8266T	289A
Q34450	124
Q35218	102A
Q35242	123AP
Q35259	161
Q40263	102A
Q40359	160
Q50787	233
Q50787Z	233
Q51210	199
Q51327	165
Q66492	373
Q66502	374
Q67832	157
Q-01069	195A
Q-01069A	195A
Q-01069B	195A
Q-01069C	237
Q-01084R	131
Q-00169	132
Q-00169A	132
Q-00169B	132
Q-00169C	132
Q-00184R	132
Q-00269	123AP
Q-00269A	123AP
Q-00269B	123AP
Q-00269C	123AP
Q-00284R	229
Q-00284R-3	108
Q-00369	123AP
Q-00369A	123AP
Q-00369B	123AP
Q-00369C	123AP
Q-00384R	233
Q-00384R-3	108
Q-00469	199
Q-00469A	199
Q-00469B	199
Q-00469C	199
Q-00484R	123AP
Q-00484R-1	108
Q-00569	123AP
Q-00569A	123AP
Q-00569B	123AP
Q-00569C	199
Q-00584	107
Q-00584R	233
Q-00584R-3	108
Q-00669	123AP
Q-00669A	123AP
Q-00669B	123AP
Q-00669C	123AP
Q-00684R	123AP
Q-00769	175
Q-00769A	175
Q-00769B	175
Q-00769C	175
Q-00784R	289
Q-00869	128
Q-00869A	128
Q-00869B	128
Q-00869C	195A
Q-00969	128
Q-00969A	128
Q-00969B	128
Q-00969C	128
Q-00984R	159
Q-0-172	128
Q-0115C	123AP
Q-0172	128
Q-01115C	107
Q-01169	128
Q-01169A	128
Q-01169B	128
Q-01169C	128
Q-01184R	195A
Q-01269	175
Q-01269B	175
Q-01269C	175
Q-01284R	195A
Q-01369	1104
Q-01369C	1104
Q-013696	1104
Q-01384R	237
Q-02115C	123AP
Q-03115C	123AP
Q-04115C	123AP
Q-05115C	123AP
Q-06115C	123AP
Q-07115C	123AP
Q-08115C	199
Q-09115C	199
Q-1	102
Q-1A	100
Q-1N914	519
Q-2	101
Q-2N5225	123AP
Q-2N5226	159
Q-3	101
Q-4	102
Q-5	101
Q-6	102A
Q-7	102A
Q-8	102A
Q-9	101
Q-16	102A
Q-35	123AP
Q-36	159
Q-36A	159
Q-5075CXY	124
Q-10115C	123AP
Q-11115C	152
Q-12115C	152
Q-13115C	199
Q-14115C	123AP
Q-15115C	123AP
Q-16115C	123AP
Q-17115C	299
Q-20115C	116
Q-21115C	177
Q-22115C	109
Q-23115C	519
Q-24115C	177
Q-25115C	139A
Q-26115C	116
Q-RF-2	123AP
Q-SE1001	123AP
QA01-07R	145A
QA01-07RE	5071A
QA01-08R	5072A
QA01-082	5072A
QA01-11.5E	5074A
QA01-11SE	5074A
QA01-12S	142A
QA01-14RD	144A
QA01-25A	5081A
QA01-25R	5081A
QA01-25R-A	5081A
QA01-25RA	5081A
QA1-11M	5074A
QA8	128
QA11	124
QA105S	5010A
QA106S	137A
QA106SB	5070A
QA106SBV	5013A
QA107BF	5071A
QA107R	5014A
QA107R3	5071A
QA107RA	5014A
QA107RE	5071A
QA107REV	5071A
QA107SP	5014A
QA108SH	5016A
QA111M	5074A
QA111S	5074A
QA111SEV	5074A
QA112R	5021A
QA112R1	142A
QA112RI	142A
QA112RN-2	5021A
QA116R	5025A
QA121R2	5030A
QA135R2	5038A
QA205AB	5009A
QA205ABV	5009A
QA205C	5010A
QA205D	5010A
QA205E	5010A
QA205F	5010A
QA205GV3	5010A
QA206AB	5011A
QA206B	5012A
QA206CD	5012A
QA206G	5013T1
QA206M	5012A
QA206MV	5012A
QA207D	5015A
QA207M	5014A
QA207M3	5014A
QA208	5016A
QA208C	5016A
QA208G	5016A
QA208GV3	5016A
QA209B	5018A
QA209C	5018A
QA210D	5019T1
QA211B	5020A
QA211CD	5021T1
QA211N1	5020A
QA212B	5022A
QA213B	5022A
QA213M2	5022A
QA220AB	5029A
QA225	5032A
QA225A	5032A
QA225ABC	5032A
QA225B	5032A
QA225C	5032A
QA228B	5034A
QA230B	5035A
QA230C	5035A
QA233C	5036A
QA233CV	5036A
QA235A	5032A
QA235AC	5032A
QA235C	5037A
QA235G	5037A
QA250E	5010A
QA703E	703
QA1055	5010T1
QA1063	5013A
QA1065	5013A
QA1085H	5016A
QA-1	160
QA-8	128
QA-9	129
QA-10	128
QA-11	129
QA-12	123AP
QA-13	123AP
QA-14	123AP
QA-15	123AP
QA-16	123AP
QA-17	129
QA-18	133
QA-19	123AP
QA-20	133
QA-21	159
QA-21A	159
QB01-11ZB	5074A
QB01-15ZB	145A
QB01-18	5077A
QB11SZB	5024A
QB105N	135A
QB106P	5070A
QB106PV	137A
QB107D	5071A
QB107S	5071A
QB110D	5074A
QB110DV	140A
QB111	5074A
QB111Z	5074A
QB112	5021A
QB112E1	142A
QB115ZB	145A
QB115ZBV	145A
QB118	5077A
QB1075	5071A
QB1152B	5024A
QC0300	15002
QC0080	1685
QC0031A	1656
QC0042	966
QC0065	15021
QC0069	928M
QC0073	1772
QC0081	4052B
QC0085	15001
QC0093	1673
QC0380	1744
QC0234	4071B
QC0235	4071B
QC0239	4071B
QC0253	15022
QC0291	1677
QC0343	4013B
QC0543	15033
QC0554	15015
QC0846	15029
QD-CS2688DJ	612
QD-G1N60PXT	109
QD-G1N60XXT	109
QD-S1S953XA	177
QD-SSR1KX4P	116
QD-SSS53XXA	177
QD-SS1555XT	177
QD-SS1885XT	116
QD-SV06CXXB	116
QD-ZBZ162XJ	5075A
QD-ZMZ205XE	135A
QD-ZMZ408CE	5072A
QD-ZMZ409BE	139A
QD-ZRD9EXAA	5018A
QD-ZRD56EAA	5070A
QD-ZRD56FAA	136A
QDCTT410XQ	611
QDSSR3AMBE	5801
QDZMZ205XE	135A
QEA02-12A	5021A
QG0074	121
QG0076	102A
QG0254	123AP
QG-0074	121
QG-0076	102
QKT0033XBE	312
QKT-0033XBE	312
QM106	106
QN2613	102
QO-419	159
QOV60526	102A
QOV60527	103A
QOV60528	102A
QOV60529	123AP
QOV60530	123AP
QOV60537	103A
QOV60538	102A
QOV60539	102
QP052000	284
QP001200A	130
QP1	121
QP1A	121
QP2	121
QP6	121
QP7	121
QP8	130
QP8-6623N	105
QP-1	179
QP-1A	179
QP-2	179
QP-3	179
QP-4	179
QP-5	179
QP-6	179
QP-7	179
QP-8	130
QP-10	179
QP-11	130
QP-12	130
QP-13	185
QP-14	184
QP-31	197
QQ-0PPL02A0	1233
QQ-M07205AT	1155

PART NUMBER	NTE REPLACEMENT
RC9212	66
RC-2	525
RC-2V	525
RC-1700	130
RC-4136D	997
RCA1A01	128
RCA1A02	129
RCA1A03	16005
RCA1A04	16004
RCA1A05	129
RCA1A06	128
RCA1A07	128
RCA1A08	129
RCA1A15	128
RCA1A16	129
RCA1A17	128
RCA1A18	128
RCA1A19	129
RCA1B01	284
RCA1B04	87
RCA1B05	87
RCA1B06	280
RCA1B09	87
RCA1C05	195A
RCA1C06	197
RCA1C10	196
RCA1C11	197
RCA1C14	196
RCA29	152
RCA29/SDH	152
RCA29A	152
RCA29A/SDH	152
RCA29B	291
RCA29BSDH	291
RCA29C	291
RCA29CSDH	291
RCA30	153
RCA30A	153
RCA30B	292
RCA30C	292
RCA120	261
RCA121	261
RCA122	261
RCA125	262
RCA126	262
RCA127	262
RCA410	94
RCA411	94
RCA423	162
RCA425	162
RCA431	162
RCA1000	243
RCA1001	243
RCA3517	102A
RCA3858	102A
RCA8203	262
RCA8203A	264
RCA8203B	264
RCA8350	246
RCA8350A	246
RCA8350B	246
RCA9213A	67
RCA9213B	67
RCA9228	2349
RCA9228A	2349
RCA9228B	2349
RCA9228C	2349
RCA9228D	2349
RCA9229A	2350
RCA9229B	2350
RCA9229C	2350
RCA9229D	2350
RCA34098	126
RCA34099	126
RCA34100	126
RCA34101	102A
RCA34106	102A
RCA35953	102A
RCA35954	102A
RCA40231	103A
RCA40245	161
RCA40246	161
RCA40250	175
RCA40395	102A
RCA40396N	103A
RCA40396P	102A
RCA40530	5642
RCA44098	126
RCAIB04	87
RCAIB05	87
RCAIB09	87
RCC7022	120
RCC7225	116
RCC-7022	116
RCP111A	171
RCP111B	171
RCP111C	171
RCP111D	171
RCP113A	171
RCP113B	171
RCP113C	171
RCP113D	171
RCP115	171
RCP115A	171
RCP115B	171
RCP117	171
RCP117B	171
RCP701A	49
RCP701B	49
RCP701C	49
RCP701D	49
RCP703A	49
RCP703B	49
RCP703C	49
RCP703D	49
RCP705	49
RCP705B	49
RCP707	49
RCP707B	49
RCS242	130
RD2.7E-B2	5002A
RD2.7E-N1	5002A
RD2.7EB1	5002A
RD2.7EB2	5002A
RD2.7EB3	5002A
RD2.7EL1	5002A
RD2R7EB1	5002A
RD2R7EB2	5002A
RD3	5067A
RD3.0	5004A
RD3.0E	5004A
RD3.0EB	5004A
RD3.0EB1	5004A
RD3.0EB2	5004A
RD3.0F	5066A
RD3.0FB	5065A
RD3.3E	5066A
RD3.3E-B	5005A
RD3.3EB	5005A
RD3.3EB1	5005A
RD3.3F	5066A
RD3.3FB	5066A
RD3.6E	434A
RD3.6E-L1	5006A
RD3.6E-L2	5006A
RD3.6E-N1	5006A
RD3.6E-N2	5006A
RD3.6EB	5006A
RD3.6EB1	5006A
RD3.6EL	5006A
RD3.6EL1	5006A
RD3.6EL1T	5006A
RD3.6EL1Z	5006A
RD3.6EL2	5006A
RD3.6EN	5006A
RD3.6EN1	5006A
RD3.6ES-B1	5006A
RD3.6ESB1	5006A
RD3.6F	134A
RD3.6FB	5006A
RD3.6FB1	5006A
RD3.6FBI	5006A
RD3.9E	5067A
RD3.9E-B	5007A
RD3.9E-B1	5007A
RD3.9E-N2	5007A
RD3.9E-N3	5007A
RD3.9EB	5007A
RD3.9EB2	5007A
RD3.9EC	5007A
RD3.9EL	5007A
RD3.9EN	5007A
RD3.9EN2	5007A
RD3.9ES-B2	5007A
RD3.9F	5067A
RD3.0E	5005A
RD3.0EB	5005A
RD3A-1B4	116
RD3R0EB	5004A
RD3R3EB	5005A
RD3R6EB	5006A
RD3R9EC	5007A
RD4.3B	5008A
RD4.3E-B1	5008A
RD4.3EB	5068A
RD4.3EB1	5008A
RD4.3EC	5069A
RD4.3ES-B1	5008A
RD4.3ESB1	5008A
RD4.7E	5009A
RD4.7E-B2	5009A
RD4.7E-N1	5009A
RD4.7EB	5009A
RD4.7EB1	5009A
RD4.7EB2	5009A
RD4.7EB3	5009A
RD4.7EB23	5009A
RD4.7EC	5009A
RD4.7ES-B1	5009A
RD4.7ES-B2	5009A
RD4.7ESB1	5009A
RD4.7ESB2	5009A
RD4.7F	5069A
RD4.7J-B1	5009A
RD4.7J-B2	5009A
RD4.7JB2	5009A
RD4.7JB3	5009A
RD4.7JSB2	5009A
RD4.7JSB3	5009A
RD4.7M	5069A
RD4-3E-BK	5008A
RD4A	5007A
RD4AL	5006A
RD4AM	5007A
RD4AN	5008A
RD4R3EB	5008A
RD4R7	5009A
RD4R7EB	5009A
RD4R7EB2	5009A
RD4R7JB2	5009A
RD4R7JB3	5009A
RD4R7JSB2	5009A
RD4R7JSB3	5009A
RD4R73B2	5009A
RD5	5011A
RD5.1E	5010A
RD5.1E81	5010A
RD5.1E.B	5010A
RD5.1E-B	5010A
RD5.1E-B1	5010A
RD5.1E-B2	5010A
RD5.1E-B3	5010A
RD5.1E-N1	5010A
RD5.1E-N2	5010A
RD5.1E-N3	5010A
RD5.1EB	5010A
RD5.1EB1	5010A
RD5.1EB2	5010A
RD5.1EB3	5010A
RD5.1EB(3)	5010A
RD5.1EB-2	5010A
RD5.1EB-T4	5010A
RD5.1EC	5010A
RD5.1EL1	5010T1
RD5.1EN1	5010A
RD5.1EN2	5010A
RD5.1EN3	5010A
RD5.1ES(B3)-Y	5010T1
RD5.1ES(B3)	5010T1
RD5.1ES-B1	5010A
RD5.1ES-B2	5010A
RD5.1ES-B3	5010T1
RD5.1ES-T2B2	5010A
RD5.1ESB1	5010A
RD5.1ESB2	5010A
RD5.1F-B3	135A
RD5.1FB	5116A
RD5.1JB	5010A
RD5.1JB1	5010A
RD5.1JB2	5010A
RD5.1JSAB2X	5010T1
RD5.1JSB2X	5010A
RD5.6B	136A
RD5.6E	136A
RD5.6E2Z	5011A
RD5.6E-B	5011A
RD5.6E-B2	5011A
RD5.6E-B2Z	5011A
RD5.6E-B3	5011A
RD5.6E-B27S	5011A
RD5.6E-BZ7	5011A
RD5.6E-BZ7S	5011A
RD5.6E-L2	5011A
RD5.6E-N1	5011A
RD5.6E-N1TN	5011A
RD5.6E-N2	5011A
RD5.6E-N2TN	5011A
RD5.6E-N3	5011A
RD5.6E-NI	136A
RD5.6EB	5011A
RD5.6EB1	5010A
RD5.6EB2	5011A
RD5.6EB2-T4	5011A
RD5.6EB2Z	5011A
RD5.6EB3	5011A
RD5.6EB7ZS	5011A
RD5.6EB23	5011A
RD5.6EB(1)	5011A
RD5.6EB(2)	5011A
RD5.6EB-B2Z	5011A
RD5.6EB-T4	5011A
RD5.6EB-Z7S	5011A
RD5.6EBZ7S	5011A
RD5.6ED	5011A
RD5.6EK	136A
RD5.6EL2	5011A
RD5.6EN1	5011A
RD5.6EN2	5011A
RD5.6EN3	5011A
RD5.6ENI	136A
RD5.6ER2TA21R	5011A
RD5.6ES	5011A
RD5.6ES-B1	5011A
RD5.6ES-B2	5011A
RD5.6ES-B3	5011A
RD5.6ES-T2B2	5011A
RD5.6ES-T2B	5011A
RD5.6ES-T2B3	5011A
RD5.6ESB1	5011A
RD5.6ESB2	5011A
RD5.6ESB3	5011A
RD5.6EZ7S	5011A
RD5.6F	136A
RD5.6F-BZ7STN	5011A
RD5.6FA	136A
RD5.6FB	136A
RD5.6FB1	136A
RD5.6JB	5011A
RD5.6JB2	5011A
RD5.6M	136A
RD5.GEC	5011A
RD5.1E-B	5010A
RD5-6EC	5011A
RD5A	5009A
RD5AL	5009A
RD5AM	5009A
RD5AN	5010A
RD5B	135A
RD5C	5177AK
RD5CL	5175AK
RD5CM	5175AK
RD5CN	5176AK
RD5D	5177AK
RD5DL	5177AK
RD5DM	5176AK
RD5DN	5176AK
RD5R1-JB3	5010A
RD5R1DE-C	5010A
RD5R1EB	5010A
RD5R1EB2	5010A
RD5R1EBB1	5010A
RD5R1JB	5010A
RD5R1JB1	5010A
RD5R6EB	5011A
RD5R6EB2	5011A
RD5R6JB	5011A
RD5R6JB2	5011A
RD5R6JB3	5011A
RD5R63B	5011A
RD6	136A
RD6.1EB1	5012A
RD6.2-EM	5013A
RD6.2E	5013A
RD6.2E4	5013A
RD6.2E(4)	5013A
RD6.2E(FA-1)	5013A
RD6.2E-B	5013A
RD6.2E-B1	5013A
RD6.2E-B2	5013A
RD6.2E-B3	5013A
RD6.2E-N1	5013A
RD6.2E-N2	5013A
RD6.2E,FA-1	5013A
RD6.2EB	5013A
RD6.2EB1	5012A
RD6.2EB1Z	5012A
RD6.2EB2	5013A
RD6.2EB3	5013A
RD6.2EB23	5013A
RD6.2EB(3)-T4	5013A
RD6.2EB(3)	5013A
RD6.2EB-2-TA11R	5013A
RD6.2EB-3	5013A
RD6.2EB-T4	5013A
RD6.2EBA	5013A
RD6.2EBT	5013A
RD6.2EC	5071A
RD6.2EFA1	5013A
RD6.2EFA-1	5013A
RD6.2EL2	5013A
RD6.2EN1TN	5013A
RD6.2EN2	5013A
RD6.2ER	5013A
RD6.2ES	5013A
RD6.2ES-B1	5013A
RD6.2ES-B2	5013A
RD6.2ESB1	5013A
RD6.2ESB2	5013A
RD6.2F	137A
RD6.2FA	137A
RD6.2FB	137A
RD6.2FB1	137A
RD6.2FB2	5013A
RD6.2FB-3	137A
RD6.2JB	5013A
RD6.2JB2	5013A
RD6.2L	5013A
RD6.2M	5013A
RD6.3EB1	5012A
RD6.8E	5071A
RD6.8E-B	5014A
RD6.8E-B1	5071A
RD6.8E-N1	5014A
RD6.8E-V3-Y	5014A
RD6.8EB	5014A
RD6.8EB2	5014A
RD6.8EB3	5014A
RD6.8EB(3)	5014A
RD6.8EB(3)-T4	5014A
RD6.8EC	5014A
RD6.8EM	5014A
RD6.8ES-B1	5013T1
RD6.8ES-B2	5014A
RD6.8ESAB2	5014A
RD6.8ESB1	5013T1
RD6.8ESB2	5014A
RD6.8EV3	5014A
RD6.8EV3-Y	5014A
RD6.8F	5071A
RD6.8FA	5071A
RD6.8FB	5071A
RD6.8JB2	5014A
RD6.8JB3	5014A
RD6.ZEB	137A
RD6A	5070A
RD6A(M)	136A
RD6AL	5011A
RD6AM	5011A
RD6AN	5070A
RD6C	5179AK
RD6CL	5178AK
RD6CM	5178AK
RD6CN	5179AK
RD6D	5179AK
RD6DL	5178AK
RD6DM	5178AK
RD6DN	5179AK
RD6EBZ7S	506
RD6R2B	137A
RD6R2B2	5013A
RD6R2EB	5013A
RD6R8EB	5014A
RD7.2EB	5015A
RD7.5E	5015A
RD7.5E(B3)	5015A
RD7.5E-B	5015A
RD7.5E-B1	5015A
RD7.5E-B3	5015A
RD7.5E-B3Z	5015A
RD7.5E-L2	5015A
RD7.5EB	5015A
RD7.5EB1	5014A
RD7.5EB2	5015A
RD7.5EB3	5015A
RD7.5EB-1	5015A
RD7.5EB-Y	5015A
RD7.5EBM	5015A
RD7.5EBMV	5015A
RD7.5EC	5015A
RD7.5ED	5015A
RD7.5EN3	5015A
RD7.5ES	5015A
RD7.5ES(B3)-Y	5015A
RD7.5ES(B3)T2	5015A
RD7.5ES(B3)	5015A
RD7.5ES-Y	5015A
RD7.5ESB3	5015A
RD7.5ESB3-Y	5015A
RD7.5F	138A
RD7.5FA	138A
RD7.5FB	138A
RD7.5FB2	138A
RD7.5JB	5015A
RD7.5JB2	5015A
RD7.5JS	5015A
RD7.5JSB2	5015A
RD7.5JSN2	5015A
RD7.5M	138A
RD7A	139A
RD7AM	5014A
RD7AN	5014A
RD7B	5071A
RD7C	5182AK
RD7CL	5180AK
RD7CM	5181AK
RD7CN	5182AK
RD7DL	5180AK
RD7DM	5181AK
RD7DN	5182AK
RD7M	138A
RD7R5EB	5015A
RD7R5EB2	5015A
RD7R5EB3	5015A
RD7R5FB	138A
RD7R5JB2	5015A
RD7R5JSB2	5015A
RD8	5072A
RD8.2	5072A
RD8.2C	5072A
RD8.2E	5016A
RD8.2E(B1)	5016A
RD8.2E-B	5016A
RD8.2EA	5016A
RD8.2EB	5016A
RD8.2EB1	5016A
RD8.2EB2	5016A
RD8.2EB2Z	5016A
RD8.2EB3	5016A
RD8.2EC	5073A
RD8.2EK	5072A
RD8.2ES(B1)-Y	5016A
RD8.2ES(B1)-T2	5016A
RD8.2ES(B1)	5016A
RD8.2ESB1-Y	5016A
RD8.2ESB3	5016A
RD8.2EV	5016A
RD8.2EW	5016A
RD8.2F	5072A
RD8.2FA	5072A
RD8.2FB	5072A
RD8.2FB2	5072A
RD8.2FB3	5072A
RD8.2JB	5016A
RD8.2JB1	5016A
RD8.2M	5072A
RD8.2V	5016A
RD8R2EB	5016A
RD8R2EV	5016A
RD8R2FB3	5072A
RD8R2JB1	5016A
RD9	139A
RD9.1E	139A
RD9.1E-B	5018A
RD9.1E-B3	5018A
RD9.1E-N3	5018A
RD9.1EA	5018A
RD9.1EB	5018A
RD9.1EB1	5018A
RD9.1EB2	5018A
RD9.1EB3	5018A
RD9.1EBD	5018A
RD9.1EBT	5018A
RD9.1EC	5018A
RD9.1ED	139A
RD9.1EN3	5018A
RD9.1ES	5018A
RD9.1ES-B2	5018A
RD9.1EW	5018A
RD9.1F	139A
RD9.1F-B3	5018A
RD9.1FA	139A
RD9.1FB	139A
RD9.1M	139A
RD9A	139A
RD9A(10)	139A
RD9A-N	139A
RD9AL	5073A
RD9AM	5018A
RD9AN	5018A
RD9B	5073A
RD9C	5183AK
RD9CL	5183AK
RD9CM	5184AK
RD9CN	5185AK
RD9D	5183AK
RD9DL	5183AK
RD9DM	5184AK
RD9DN	5185AK
RD9R1EB	5018A
RD9R1EW	5018A
RD10C	140A
RD10E	5019A
RD10E-B1	5019A
RD10E-B3	5019A
RD10E-N1	5018A
RD10E-N2	5019A
RD10E-N3	5019A
RD10E-N3TN	5019A
RD10E-NE	5019A
RD10EA	5019A
RD10EB	5019A
RD10EB1	5018A
RD10EB2	5019A
RD10EB3	5019A
RD10EB23	5019A
RD10EB-0.4W	140A
RD10EB-2	140A
RD10EN1	5018A
RD10EN1T	5018A
RD10EN2	5019A
RD10EN3	5019A
RD10ES-B1	5019A
RD10ES-B2	5019A
RD10ES-T2B2	5019A
RD10ESB1	5019A
RD10ESB2	5019A
RD10ESB3	5019A
RD10F	140A
RD10FA	140A
RD10FB	140A
RD10FB2	140A
RD10FBD	140A
RD10FC	140A
RD10H	140A
RD10JB	5019A
RD10JB2	5019A
RD10JB3	5019A
RD10JB(2)	5019A
RD10JB(3)	5019A
RD10JSAB3	5019A
RD10JSB	5019A
RD10JSB2	5019A
RD10JSB2T	5019A
RD10JSB3	5019A
RD10JSB(2)	5019A
RD10JSB(3)	5019A
RD10M	140A
RD11A	140A
RD11AL	5019A
RD11AM	5019A
RD11AN	5020A
RD11B	5020A
RD11B2	5020A
RD11C	5186AK
RD11CL	5186AK
RD11CM	5186AK
RD11CN	5187AK
RD11D	5186AK
RD11DL	5186AK
RD11DM	5186AK
RD11DN	5187AK
RD11E	5020A
RD11E(B3)	5020A
RD11E(B)	5020A
RD11E-B	5020A
RD11E-B2	5020A
RD11EA	5020A
RD11EB	5020A
RD11EB1	5019A
RD11EB2	5020A
RD11EB2-TR21R	5020A
RD11EB2TA21R	5020A
RD11EB3	5020A
RD11EB-Y	5020A
RD11EBC	5019A
RD11EC	5021A
RD11EE	5020A
RD11EM	5074A
RD11ESB2	5020A
RD11F	5074A
RD11FA	5074A
RD11FB	5074A
RD11FB02-TA21-R	5074A
RD11FB2	5074A
RD11FBD2	5074A
RD11JB	5020A
RD11M	5074A
RD12	142A
RD12-OF	142A
RD12B	5021A
RD12E	5021A
RD12E(B1)	5021A
RD12E-B1	5021A
RD12E-B2	5021A
RD12E-B2Z	5021A
RD12E-B3	5021A
RD12E-L1	5021A
RD12E-T2	5021A
RD12EA	5021A
RD12EB	5021A
RD12EB0(2)	5021A
RD12EB1	5021A
RD12EB1Z	5021A
RD12EB2	5021A
RD12EB2M	5021A
RD12EB3	5021A
RD12EB(1)	5021A
RD12EB(3)	5021A
RD12EB(3)-T4	5021A
RD12EB-1	5021A
RD12EB-2	5021A
RD12EB-T4	5021A
RD12EBD	5021A
RD12EBM	5021A
RD12EBN	5021A
RD12EBO(2)	5021A
RD12EC	142A
RD12ES-B2	5021A
RD12ES-B3	5021A
RD12ES-T2B2	5021A
RD12F	142A
RD12F(B1)	142A
RD12FA	142A
RD12FB	142A
RD12FB1	142A
RD12FB2	142A
RD12FB3	142A
RD12FBT	142A
RD12JB2	5021A
RD12JSB2	5021T1
RD12M	142A
RD13	143A
RD13A	143A
RD13AK	143A
RD13AKP	143A
RD13AL	5021A
RD13AM	5022A
RD13AN	143A
RD13AN-P	143A
RD13ANP	143A
RD13B	143A
RD13B-Z	143A
RD13C	5128A
RD13CL	5188AK
RD13CM	5189AK
RD13CN	5189AK
RD13D	5128A
RD13DL	5188AK
RD13DM	5189AK
RD13DN	5189AK
RD13E	5022A
RD13E-2BZ	5022A
RD13E-B	5022A
RD13E-B2	5022A
RD13E-B2Z	5022A
RD13E-B3Z	5022A
RD13E-BEZ	5022A
RD13E-N1	5022A
RD13E-N2	5022A
RD13EA	5022A
RD13EB	5022A
RD13EB1	5022A
RD13EB2	5022A
RD13EB2Z	5022A
RD13EB3	5022A
RD13EB(2)	5022A
RD13EB-1	5022A
RD13EB-2	5022A
RD13ED1	5022A
RD13EL1	5022A
RD13EN1	5022A
RD13EN2	5022A
RD13ES-B	5022A
RD13ESB	5022A
RD13F	143A
RD13FA	143A
RD13FB	143A
RD13K	142A
RD13M	143A
RD15E	145A
RD15E-12	5024A
RD15E-B3	5024A
RD15E-B3Z	5024A
RD15E-N1	5024A
RD15E-N3	5024A
RD15EA	5024A
RD15EB	5023A
RD15EB2	5023A
RD15EB3	5024A
RD15EN3	5024A
RD15F	145A
RD15F1	145A
RD15FA	145A
RD15FB	145A
RD15FM	145A
RD15FMZ	145A
RD15JB3	5024A
RD15M	145A
RD15S	145A
RD16A	5025A
RD16A-N	5075A
RD16AL	5023A
RD16AM	5024A
RD16AN	5026A
RD16B	5075A
RD16C	5192AK
RD16C-Y	5075A
RD16CL	5190AK
RD16CM	5191AK
RD16CN	5193AK
RD16D	5192AK
RD16DL	5190AK
RD16DM	5191AK
RD16DN	5193AK
RD16E	5025A
RD16E-B3	5025A
RD16E-M	5075A
RD16E-N	5075A
RD16E-N2	5075A
RD16E-N3	5075A
RD16EB	5025A
RD16EB1	5025A
RD16EB2	5025A
RD16EB3	5025A
RD16EC	5076A
RD16EL3	5025A
RD16F	5076A
RD16FA	5076A

PART NUMBER	NTE REPLACEMENT
RD16FB	5076A
RD16FB1	5075A
RD16H	145A
RD16M	5075A
RD18E-B	5027A
RD18E-B1	5027A
RD18EB	5027A
RD18EB1	5027A
RD18ES-B1	5026A
RD18ES-B2	5027A
RD18ESB1	5026A
RD18EST1B1	5026A
RD18F	5077A
RD18FA	5077A
RD18FB	5077A
RD18FB2	5077A
RD18FB3	5077A
RD19	5078A
RD19A	5028A
RD19AL	5028A
RD19AM	5028A
RD19C	5195AK
RD19CL	5194AK
RD19CM	5196AK
RD19D	5195AK
RD19DL	5194AK
RD19DM	5196AK
RD20E	5029A
RD20E(B1)	5029A
RD20EB	5029A
RD20EB2	5028A
RD20EB3	5029A
RD20ES-B1	5028A
RD20ES-B2	5028A
RD20ESB1	5028A
RD20ESB2	5028A
RD20EV2	5029A
RD20F	5079A
RD20FA	5079A
RD20FB	5079A
RD20FBA	5079A
RD22	5080A
RD22E	5080A
RD22EB	5030A
RD22EB1	5030A
RD22F	5080A
RD22FA	5080A
RD22FB	5080A
RD22FC	5030A
RD24A	5031A
RD24AL	5031A
RD24AM	5031A
RD24AN	5032A
RD24C	5198AK
RD24CL	5197AK
RD24CM	5197AK
RD24CN	5199AK
RD24D	5198AK
RD24DL	5197AK
RD24DM	5197AK
RD24DN	5199AK
RD24E	5031A
RD24E(B3)	5031A
RD24E-B	5031A
RD24E-B27	5031A
RD24E-BZ7	5031A
RD24E-BZ7TN	5031A
RD24EB	5031A
RD24EB1	5031A
RD24EB2	5031A
RD24EB3	5031A
RD24EB-Z7	5031A
RD24EB-ZT	5031A
RD24EBZ7	5031A
RD24ES-B1	5031A
RD24F	5081A
RD24F-BS	5081A
RD24FA	5081A
RD24FB	5081A
RD24FC	5082A
RD24M	5081A
RD27E	5083A
RD27EB	146A
RD27EB1	5033A
RD27EB2	5033A
RD27EB3	5033A
RD27EB4TN	5033A
RD27EBS	5033A
RD27F	146A
RD27FA	146A
RD27FB	146A
RD27FB2	146A
RD27FCD	146A
RD27JS	146A
RD27JS-B3	5033A
RD27JS-T1	5033A
RD27JST	146A
RD27JST1	5033A
RD27M	146A
RD29A	5034A
RD29AL	5033A
RD29AM	5034A
RD29AN	5035A
RD29B	5083A
RD29C	5201AK
RD29CL	5200AK
RD29CM	5201AK
RD29CN	5202AK
RD29D	5201AK
RD29DL	5200AK
RD29DM	5201AK
RD29DN	5203AK
RD30E	5035A
RD30E-B2	5035A
RD30EB	5035A
RD30EB2	5035A
RD30EB3	5035A
RD30EB4	5035A
RD30ES-B2	5035A
RD30F	5084A
RD30F83	5084A
RD30FA	5084A
RD30FB	5084A
RD30FB1	5083A
RD30FB2	5084A
RD30FB3	5084A
RD30FB(1)	5083A
RD30FB(2)	5084A
RD30FB(3)	5084A
RD30M	5084A
RD33	5036A
RD33B-E1	5036A
RD33E	5036A
RD33E-B1	5036A
RD33E-B2	5036A
RD33E-B2TN	5036A
RD33E-B2Z	5036A
RD33EB	5036A
RD33EB1	5035A
RD33EB2	5036A
RD33EB2T	5036A
RD33EB3	5036A
RD33EB4	5036A
RD33EB5	5036A
RD33EB-4	5036A
RD33EC	5085A
RD33ES-B2	5036A
RD33ESB2	5036A
RD33ESB3	5036A
RD33F	147A
RD33FA	147A
RD33FB	147A
RD33FB1	5036A
RD33FB2	147A
RD33M	147A
RD35A	5085A
RD35AE	5038A
RD35AL	5036A
RD35AM	5037A
RD35B	5085A
RD35C	5204AK
RD35CL	5203AK
RD35CM	5204AK
RD35CN	5205AK
RD35D	5204AK
RD35DL	5203AK
RD35DM	5204AK
RD35DN	5205AK
RD36E	5037A
RD36E-B	5037A
RD36E-B1	5037A
RD36EB	5037A
RD36EB1	5037A
RD36EB2	5036A
RD36EB3	5037A
RD36EB3V	5037A
RD36EB-2	5037A
RD36EB-T1	5037A
RD36EB-TA11R	5037A
RD36ES	5037A
RD36ES-B-T1	5037A
RD36EV3	5036A
RD36F	5085A
RD36FA	5085A
RD36FB	5085A
RD36M	5085A
RD39E	5086A
RD39E-B1	5038A
RD39E-C2	5038A
RD39EB	5067A
RD39EB2	5038A
RD39F	5086A
RD39FA	5086A
RD39FB	5086A
RD39M	5086A
RD42EB	5008A
RD43EA	5039A
RD43EB2	5039A
RD47E	5040A
RD47E-TB	5040A
RD47EA	5040A
RD47EB2	5088A
RD47FBD	5088A
RD51EA	5041A
RD51EB	5041A
RD51EB1	5010A
RD51EB3	5010A
RD51JB	5041A
RD56BZ7S	5011A
RD56E-B22	5011A
RD56E-B27	5011A
RD56E-BZ7S	5011A
RD56EB	5042A
RD56FB	5090A
RD62EA	5044A
RD62EB	5013A
RD68EA	5045A
RD68EB	5045A
RD68EV3Y	5092A
RD75EA	5046A
RD75EBM	5015A
RD82EA	5047A
RD82JB	5047A
RD91E	5095A
RD91EA	5049A
RD91EB	5049A
RD100EA	5050A
RD103B2	5019A
RD130	5128A
RD250	116
RD551DE-C	5010A
RD565B	5011A
RD705ES(B3)	5015A
RD1212EB-T4	5021A
RD1343	177
RD3472	116
RD9037	116
RD26235-1	116
RD29799P	116
RD31903P	116
RD.2EB1	5015A
RD.11EBTA21R	5020A
RD-2.2E	5072A
RD-3	116
RD-4.7EB	5009A
RD-4A	134A
RD-4AM	134A
RD-5.1EB	5010A
RD-5A	135A
RD-6.2EB	5013A
RD-6.8EB	5014A
RD-6A	136A
RD-6AM	136A
RD-6L	137A
RD-7.5EB	138A
RD-7A	139A
RD-7AM	5071A
RD-7E	5071A
RD-8.2A	5072A
RD-8.2E	5072A
RD-8.2E(C)	5072A
RD-8.2EB	5072A
RD-8.2EC	5017A
RD-8.2FB	5072A
RD-9.1	139A
RD-9.1E	139A
RD-9.1EB	5018A
RD-9A	139A
RD-9A(L)	141A
RD-9AL	139A
RD-9E	140A
RD-9L	139A
RD-10E	5016A
RD-10EB	5019A
RD-10EC	5019A
RD-11B	140A
RD-11E	5074A
RD-11EB	5020A
RD-11EB3	5020A
RD-11EBTA21R	5020A
RD-12EB	5021A
RD-13A	143A
RD-13AD	143A
RD-13AK	143A
RD-13AK-P	143A
RD-13AKP	143A
RD-13AL	5072A
RD-13AM	143A
RD-13AN	5022A
RD-13E	5022A
RD-13EB2	5022A
RD-13M	143A
RD-15E	145A
RD-16H	145A
RD-16HA	145A
RD-19A	5079A
RD-19AM	5079A
RD-20E	5079A
RD-24A	5081A
RD-30EB	5036A
RD-35	5085A
RD-35A	147A
RD-36EB	5037A
RD-91	139A
RD-91E	5018A
RD-96	139A
RD-3472	116
RD-26235-1	116
RD-29799P	116
RD-31903P	116
RD-HEB3	5020A
RDBE-B2Z	5022A
RDS.1EL1	5010A
RE1	100
RE2	116
RE3	116
RE4	126
RE5	103
RE6	103A
RE7	104
RE7MP	124
RE8	105
RE9	107
RE10	123AP
RE11	104
RE11MP	104
RE12	123AP
RE13	123AP
RE14	124
RE15	126
RE16	127
RE17	128
RE18	106
RE19	130
RE20	131
RE20MP	131
RE21	152
RE22	153
RE23	154
RE24	157
RE25	158
RE26	159
RE27	160
RE28	161
RE29	163A
RE30	163A
RE31	164
RE32	165
RE33	172A
RE34	175
RE35	176
RE36	179
RE37	181
RE38	182
RE39	183
RE40	184
RE41	185
RE42	186
RE43	187
RE44	190
RE45	312
RE46	133
RE47	109
RE48	112
RE49	116
RE50	116
RE51	125
RE52	177
RE53	106
RE54	155
RE55	506
RE61	281
RE62	194
RE63	159
RE64	199
RE65	190
RE66	123AP
RE67	123AP
RE70	192
RE73	171
RE74	180
RE75	190
RE76	189
RE77	191
RE78	194
RE79	195A
RE79A	195A
RE80	299
RE81	211
RE82	180
RE83	226
RE83MP	226
RE86	109
RE87	113A
RE90	125
RE91	120
RE92	156
RE93	173BP
RE93P	173BP
RE94	519
RE95	5061A
RE96	5062A
RE97	5063A
RE98	5064A
RE99	5065A
RE100	5066A
RE101	134A
RE102	5067A
RE103	5068A
RE104	5069A
RE105	135A
RE106	136A
RE107	136A
RE108	5070A
RE109	137A
RE110	5071A
RE111	138A
RE112	5072A
RE113	5073A
RE114	139A
RE115	140A
RE116	5074A
RE117	141A
RE118	142A
RE119	143A
RE120	144A
RE121	145A
RE122	5075A
RE123	5076A
RE124	5077A
RE125	5078A
RE126	5079A
RE127	5080A
RE128	5081A
RE129	5082A
RE130	147A
RE132	149A
RE133	5096A
RE136	5174A
RE137	5175A
RE138	5176A
RE140	5177A
RE141	5178A
RE142	5179A
RE143	5180A
RE144	5181A
RE145	5182A
RE146	5183A
RE147	5184A
RE148	5185A
RE149	5186A
RE150	5187A
RE152	5188A
RE153	5189A
RE154	5190A
RE155	5191A
RE156	5192A
RE157	5193A
RE158	5194A
RE159	5195A
RE160	5196A
RE161	5197A
RE162	5198A
RE163	5199A
RE164	5202A
RE166	5209A
RE167	118
RE168	5455
RE169	5482
RE170	5545
RE171	5455
RE172	5483
RE173	5545
RE174	5457
RE175	5545
RE176	5545
RE177	5487
RE178	5547
RE179	5640
RE181	5682
RE182	5641
RE184	5683
RE185	5642
RE187	5685
RE188	5643
RE191	198
RE192	199
RE193	234
RE194	235
RE195	614
RE196	192
RE197	193
RE198	224
RE199	222
RE200	503
RE201	236
RE202	224
RE203	225
RE204	302
RE300-IC	703
RE301-IC	709
RE303-IC	783
RE304-IC	749
RE305-IC	712
RE307-IC	714
RE309-IC	722
RE310-IC	747
RE311-IC	708
RE313-IC	187
RE314-IC	742
RE315-IC	737
RE316-IC	736
RE317-IC	743
RE318-IC	721
RE321-IC	740A
RE324-IC	791
RE325-IC	1004
RE326-IC	1006
RE327-IC	1052
RE328-IC	1080
RE329-IC	1103
RE330-IC	1142
RE332-IC	788
RE333-IC	797
RE334-IC	801
RE335-IC	1003
RE336-IC	1005
RE337-IC	1046
RE338-IC	1058
RE339-IC	1081A
RE340-M	1087
RE341-M	1082
RE342-M	1092
RE343-IC	1096
RE344-M	1100
RE345-IC	723
RE347M	1024
RE349-M	1027
RE504	117
RE1001	108
RE1002	108
RE2001	161
RE2002	161
RE3001	107
RE3002	107
RE4001	199
RE4002	199
RE4010	199
RE5001	161
RE5002	161
RE-35	176
RE-61	281
RE-82	180
RE-93	173BP
RE-100	5066A
RE-102	5067A
RE-110	5071A
RE-112	5072A
RE-123	5076A
RE-124	5077A
RE-125	5078A
RE-126	5079A
RE-133	5096A
RE-168	5455
RE-171	5455
RE-173	5545
RE-175	5545
RE-176	5545
RE-303-IC	783
RE-304-IC	749
RE-310-IC	747
RE-313-IC	738
RE-314-IC	742
RE-315-IC	737
RE-317-IC	743
RE-318-IC	721
RE-321-IC	740A
RECT-S1-154	552
RECT-S1-1001	116
RECT-S1-1002	552
RECT-S1-1021	552
RECT-S1-1039	116
RECT-S1-1044	116
RECT-SI-154	552
RECT-SI-1001	116
RECT-SI-1002	552
RECT-SI-1005	552
RECT-SI-1019	525
RECT-SI-1020	552
RECT-SI-1021	552
RECT-SI-1023	116
RECT-U-1012	5305
RECT-UG-1002	5305
RECT-UG-1004	5304
REJ70148	113A
REJ70148A	113A
REJ70643	116
REJ70931	116
REJ71253	177
REJ701148-1	113A
REN57	323
REN58	323
REN59	324
REN60	287
REN61	281
REN62	234
REN63	290
REN64	199
REN66	194
REN67	199
REN68	218
REN69	160
REN70	128
REN85	326
REN90	125
REN94	519
REN100	100
REN101	101
REN102	102
REN102A	102A
REN103	103
REN103A	103A
REN104	104
REN105	105
REN106	106
REN107	107
REN108	108
REN109	109
REN110	110MP
REN112	112
REN113	113A
REN116	116
REN117	117
REN118	118
REN120	120
REN121	121
REN121MP	121MP
REN123	123
REN123A	123AP
REN124	124
REN125	125
REN126	126
REN127	127
REN128	128
REN129	129
REN130	130
REN131	131
REN131MP	131MP
REN132	132
REN133	133
REN134	134A
REN135	135A
REN136	136A
REN137	137A
REN138	138A
REN139	139A
REN140	140A
REN141	141A
REN142	142A
REN143	143A
REN144	144A
REN145	145A
REN146	146A
REN147	147A
REN148	148A
REN149	149A
REN150	150A
REN151	151A
REN152	152
REN153	153
REN154	154
REN155	155
REN156	156
REN157	157
REN158	158
REN159	159
REN160	160
REN161	161
REN162	162
REN163	163A
REN164	164
REN165	165
REN166	166
REN171	171
REN172	172A
REN172A	172A
REN175	175
REN176	176
REN177	177
REN179	179
REN180	180
REN181	181
REN182	182
REN183	183
REN184	184
REN185	185
REN186	186
REN186A	186A
REN187	187
REN188	188
REN189	189
REN190	190
REN191	191
REN192	192
REN193	193
REN194	194
REN195A	195A
REN196	196
REN197	197
REN198	198
REN199	199
REN210	210
REN211	211
REN218	218
REN219	219
REN221	221
REN222	222
REN224	224
REN225	225
REN226	226
REN226MP	226MP
REN229	229
REN230	230
REN231	231
REN233	233
REN234	234
REN235	235
REN236	236
REN237	237
REN238	238
REN276	276
REN280	280
REN287	287
REN288	288
REN289	289
REN290	290
REN291	291
REN292	292
REN293	293
REN294	294
REN295	295
REN297	297
REN298	298
REN299	299
REN300	300
REN302	302
REN306	306
REN308	308
REN310	310
REN311	311
REN315	315
REN322	322
REN324	324
REN325	325
REN500A	500A
REN503	503
REN504	504
REN506	506
REN513	513
REN521	521
REN523	523
REN526A	526A
REN600	600
REN601	601
REN612	612
REN614	614
REN703A	703
REN708	708
REN709	709
REN712	712
REN714	714
REN721	721
REN722	722
REN723	723
REN731	731
REN736	736
REN737	737
REN738	738
REN740	740A
REN742	742
REN743	743
REN744	744
REN747	747
REN749	749
REN780	780
REN783	783
REN788	788
REN791	791
REN797	797
REN801	801
REN804	804
REN977	977
REN1003	1003
REN1004	1004
REN1005	1005
REN1006	1006
REN1024	1024
REN1027	1027
REN1028	1028

PART NUMBER	NTE REPLACEMENT
REN1046	1046
REN1050	1050
REN1050#	1050
REN1052	1052
REN1056	1056
REN1058	1058
REN1073	1073
REN1080	1080
REN1081A	1081A
REN1082	1082
REN1087	1087
REN1092	1092
REN1096	1096
REN1099	1099
REN1100	1100
REN1102	1102
REN1103	1103
REN1127	1127
REN1128	1128
REN1130	1130
REN1135	1135
REN1142	1142
REN1155	1155
REN1165	1165
REN1166	1166
REN1167	1167
REN1174	1174
REN1192	1192
REN5061	5061A
REN5062	5062A
REN5063	5063A
REN5064	5064A
REN5065	5065A
REN5066	5066A
REN5067	5067A
REN5068	5068A
REN5069	5069A
REN5070	5070A
REN5071	5071A
REN5072	5072A
REN5073	5073A
REN5074	5074A
REN5075	5075A
REN5076	5076A
REN5077	5077A
REN5078	5078A
REN5079	5079A
REN5080	5080A
REN5081	5081A
REN5082	5082A
REN5086	5086A
REN5096	5096A
REN5174	5174A
REN5175	5175A
REN5176	5176A
REN5177	5177A
REN5178	5178A
REN5179	5179A
REN5180	5180A
REN5181	5181A
REN5182	5182A
REN5183	5183A
REN5184	5184A
REN5185	5185A
REN5186	5186A
REN5187	5187A
REN5188	5188A
REN5189	5189A
REN5190	5190A
REN5191	5191A
REN5192	5192A
REN5193	5193A
REN5194	5194A
REN5195	5195A
REN5196	5196A
REN5197	5197A
REN5198	5198A
REN5199	5199A
REN5202	5202A
REN5205	5205A
REN5209	5209A
REN5400	5400
REN5401	5401
REN5404	5404
REN5448	5448
REN5454	5454
REN5455	5455
REN5457	5457
REN5482	5482
REN5483	5483
REN5485	5485
REN5487	5487
REN5542	5542
REN5543	5543
REN5545	5545
REN5547	5547
REN5640	5640
REN5641	5641
REN5642	5642
REN5643	5643
REN5682	5682
REN5683	5683
REN5685	5685
REN6401	6401
REN6402	6402
REN6408	6408
REN7400	7400
REN7473	7473
REN7474	7474
REN7493A	7493A
REN74123	74123
REN74161	74161
RER023	113A
RER-023	113A

PART NUMBER	NTE REPLACEMENT
RET20	116
RF1	552
RF1A	552
RF1B	552
RF8.2E	5072A
RF10K35	506
RF200	161
RF1811	109
RF3160	116
RF3472	116
RF5464	113A
RF5464-1P	113A
RF5465	113A
RF5465-1&	113A
RF5465-1P	113A
RF7313	124
RF26231-1	116
RF26234-1	116
RF26235-1	116
RF26235-2	116
RF26235-5	116
RF29799P	116
RF31903P	116
RF32101-8	116
RF32101-9	116
RF32101R	116
RF32103-1	118
RF32103R	118
RF32412-3	116
RF32426-7	178MP
RF32645	116
RF33426-7	113A
RF33550-1	109
RF33976	116
RF34383	116
RF34661	177
RF34720	116
RF35123	109
RF60034	109
RF-1	552
RF-1A	552
RF-1Z	519
RF-8.2E	5072A
RF-3160	116
RF-6235-1	116
RF-32101-8	116
RF-32101R	116
RFA70597	116
RFA70600	116
RFC61197	116
RFJ6134	116
RFJ30704	116
RFJ31218	116
RFJ31362	116
RFJ31363	116
RFJ33292	116
RFJ60033	112
RFJ60172	109
RFJ60173	116
RFJ60174	116
RFJ60286	116
RFJ60313	113A
RFJ60366	116
RFJ60614	109
RFJ60869	116
RFJ70147	5804
RFJ70148	113A
RFJ70149	506
RFJ70431	113A
RFJ70432	116
RFJ70487	116
RFJ70703	116
RFJ70931	116
RFJ70970	116
RFJ70971	506
RFJ70974	116
RFJ70976	506
RFJ70977	116
RFJ71122	116
RFJ71123	156
RFJ71480	139A
RFJ72360	116
RFJ72787	116
RFJ711122	116
RFJ-30704	116
RFJ-31218	116
RFJ-31362	116
RFJ-31363	116
RFJ-33292	116
RFJ-60366	116
RFJZ0432	116
RFL30596	116
RFL-30596	116
RFM33160	116
RFM-33160	116
RFO3C06	503
RFP6N45	2385
RFP6N50	2385
RFP7N35	2385
RFP7N40	2385
RFP8N18	2388
RFP8N20	2388
RFP8P10	2383
RFP10N12	2388
RFP10N15	2388
RFP12N08	66
RFP12N10	66
RFP12N18	2388
RFP12N20	2388
RFP33118	116
RFP-33118	116
RFS61436	117
RFV60500	116
RG2	580

PART NUMBER	NTE REPLACEMENT
RG2V	580
RG3	580
RG3A	580
RG3B	580
RG3D	580
RG3G	580
RG3J	580
RG4	580
RG4A	580
RG4B	580
RG4D	580
RG4G	580
RG4J	580
RG4LFM1	580
RG5LFM1	580
RG100B	116
RG100D	116
RG100G	116
RG100J	116
RG602	6026
RG602R	6027
RG602T	6026
RG602TR	6027
RG604	6034
RG604R	6035
RG604T	6034
RG604TR	6035
RG606	6040
RG606R	6041
RG606T	6040
RG606TR	6041
RG608	6042
RG608R	6043
RG608T	6042
RG608TR	6043
RG610	6044
RG610R	6045
RG610T	6044
RG610TR	6045
RG1004	116
RG1127	116
RG-2	580
RG-2V	580
RG-2Y	580
RGB-10G	552
RGM30A	6206
RGM30B	6206
RGM30D	6206
RGM30G	6208
RGM30J	6210
RGP01-08	552
RGP01-17	525
RGP01-17PKG23	558
RGP10A	552
RGP10B	552
RGP10D	552
RGP10DG1	116
RGP10G	552
RGP10G23	552
RGP10GPKG23	552
RGP10J	552
RGP10J-T3	552
RGP10J-Z	552
RGP10JG23	552
RGP10K	558
RGP10M	558
RGP15-10	506
RGP15-12	506
RGP15-14	506
RGP15B	580
RGP15D	580
RGP15G	580
RGP15GPKG23	580
RGP15J	580
RGP15M	506
RGP20GL	125
RGP25D	580
RGP30G	558
RGP30G-5001L	558
RGP80A	581
RGP80B	581
RGP80D	581
RGP80G	581
RGP100	552
RGP5040	552
RGP5080	125
RGP-10B	552
RGP-10D	552
RGP-10DG1	552
RGP-10G	552
RGP-10J	552
RGP-10K	552
RGP-15G	506
RGP-100	552
RGPO1-08	552
RH1	552
RH1A	552
RH1B	506
RH1C	558
RH1M	552
RH1S	552
RH1S-FAL	552
RH1S-LFA1	552
RH1S-T3	552
RH1S-Z	552
RH1SV	552
RH1Z	552
RH2D	558
RH2F	558
RH2FM	525
RH2FV	558
RH12F	142A
RH120	123AP
RH-1	552

PART NUMBER	NTE REPLACEMENT
RH-1A	552
RH-1AV1	552
RH-1B	506
RH-1B-Z	506
RH-1BV	552
RH-1C	506
RH-1M	558
RH-1S	552
RH-1S-Z	552
RH-1V	552
RH-1X0004CEZZ	749
RH-1X0005PAZZ	7476
RH-1X0020CEZZ	1004
RH-1X0015TAZZ	1245
RH-1X020CEZZ	1658
RH-1X0021CEZZ	1080
RH-1X0023CEZZ	1079
RH-1X0025CEZZ	1050
RH-1X0032CEZZ	1089
RH-1X0037CEZZ	615P
RH-1X0038CEZZ	712
RH-1X0043CEZZ	712
RH-1X0054CEZZ	1140
RH-1X0094CEZZ	1496
RH-1X0260CEZZ	1658
RH-1X0137CEZZ	1751
RH-1X0212CEZZ	1671
RH-1X0214CEZZ	1576
RH-1X0225CEZZ	1377
RH-1X0238CEZZ	1676
RH-1X0275CEZZ	1572
RH-1X0948CEZZ	1782
RH-1X1020AFZZ	1115
RH-1Z	552
RH-1ZM	552
RH-1ZV	552
RH-2F	558
RH-2FS	558
RH-DX0100CEZZ	525
RH-DX0200CEZZ	5332
RH-DX0001GEZZ	5312
RH-DX0003SEZZ	116
RH-DX0003TAZZ	116
RH-DX0004TAZZ	506
RH-DX0008CEZZ	116
RH-DX0090CEZZ	506
RH-DX0014-CEZZ	552
RH-DX0017CEZZ	506
RH-DX0025CEZZ	116
RH-DX0026AGZZ	116
RH-DX0027CEZZ	605A
RH-DX0028CEZZ	506
RH-DX0029CEZZ	506
RH-DX0033TAZZ	519
RH-DX0036TAZZ	156
RH-DX0038CEZZ	552
RH-DX0039TAZZ	116
RH-DX0041CEZZ	125
RH-DX0042CEZZ	125
RH-DX0043TAZZ	116
RH-DX0045CEZZ	519
RH-DX0045GEZZ	519
RH-DX0046CEZZ	519
RH-DX0047GEZZ	585
RH-DX0048CEZZ	519
RH-DX0048GEZZ	177
RH-DX0049GEZZ	552
RH-DX0051CEZZ	506
RH-DX0052GEZZ	552
RH-DX0053GEZZ	177
RH-DX0054CEZZ	177
RH-DX0055TAZZ	116
RH-DX0056CEZZ	116
RH-DX0056TAZZ	506
RH-DX0057TAZZ	506
RH-DX0059TAZZ	116
RH-DX0062CEZZ	506
RH-DX0063CEZZ	116
RH-DX0064CEZZ	116
RH-DX0065CEZZ	506
RH-DX0065CZZ	125
RH-DX0066TAZZ	116
RH-DX0067TAZZ	116
RH-DX0068TAZZ	552
RH-DX0069TAZZ	116
RH-DX0072CEZZ	116
RH-DX0073CEZZ	506
RH-DX0073TAZZ	116
RH-DX0077CEZZ	525
RH-DX0079TAZZ	116
RH-DX0081CEZZ	506
RH-DX0081TAZZ	116
RH-DX0083CEZZ	116
RH-DX0085TAZZ	552
RH-DX0086	552
RH-DX0086TA22	558
RH-DX0086TAZZ	552
RH-DX0091CEZZ	156
RH-DX0092CEZZ	116
RH-DX0096CEZZ	506
RH-DX0101-CEZZ	552
RH-DX0101CEZZ	552
RH-DX0104CEZZ	506
RH-DX0105TAZZ	552
RH-DX0106CEZZ	552
RH-DX0110CEZZ	116
RH-DX0130CEZZ	552
RH-DX0202CEZZ	552
RH-DX0208CEZZ	5332
RH-DX0220CEZZ	116
RH-DX086TAZZ	552
RH-DX0114CEZZ	552
RH-DX0115CEZZ	116
RH-DX0115TAZZ	125

PART NUMBER	NTE REPLACEMENT
RH-DX0117TAZZ	552
RH-DX0123CEZZ	552
RH-DX0126CEZZ	552
RH-DX0131CEZZ	552
RH-DX0132CEZZ	552
RH-DX0136TAZZ	125
RH-DX0137TAZZ	558
RH-DX0142CEZZ	177
RH-DX0152CEZZ	5314
RH-DX0154CEZZ	552
RH-DX0155CEZZ	552
RH-DX0179CEZZ	519
RH-DX0181CEZZ	580
RH-DX0226CEZZ	552
RH-DX0229CEZZ	506
RH-DX0236CEZZ	519
RH-DX0237CEZZ	519
RH-DX110CEZZ	116
RH-DX1005AFZZ	116
RH-DY0003SEZZ	116
RH-EX0200CEZZ	5021A
RH-EX0010GEZZ	5011A
RH-EX0020GEZZ	5010A
RH-EX0011CEZZ	143A
RH-EX0011GEZZ	5024A
RH-EX0012CEZZ	5082A
RH-EX0012GEZZ	5005A
RH-EX0013CEZZ	5078A
RH-EX0015CEZZ	142A
RH-EX0017CEZZ	143A
RH-EX0019CEZZ	138A
RH-EX0019GEZZ	5024A
RH-EX0019TAZZ	5022A
RH-EX0021TAZZ	5020A
RH-EX0022CEZZ	5078A
RH-EX0022TAZZ	5020A
RH-EX0023GEZZ	140A
RH-EX0023TAZZ	5100A
RH-EX0024CEZZ	5013A
RH-EX0024CFZZ	5013A
RH-EX0033CEZZ	147A
RH-EX0034CEZZ	5081A
RH-EX0037CEZZ	5079A
RH-EX0038CEZZ	142A
RH-EX0041TAZZ	5014A
RH-EX0042TAZZ	5009A
RH-EX0043CEZZ	5035A
RH-EX0043TAZZ	5010A
RH-EX0044CEZZ	5019A
RH-EX0046TAZZ	5015A
RH-EX0047CEZZ	5021T1
RH-EX0047GEZZ	5009A
RH-EX0047TAZZ	5019A
RH-EX0048CEZZ	5013A
RH-EX0049TAZZ	5011T1
RH-EX0053CEZZ	5037A
RH-EX0053TAZZ	5013A
RH-EX0054CEZZ	5097A
RH-EX0057CEZZ	148A
RH-EX0061CEZZ	142A
RH-EX0062CEZZ	116
RH-EX01063CEZZ	5010A
RH-EX0065CEZZ	5025A
RH-EX0072CEZZ	5079A
RH-EX0074CEZZ	5161A
RH-EX0076CEZZ	5006A
RH-EX0084CEZZ	5093A
RH-EX0085CEZZ	5014A
RH-EX0088CEZZ	5014A
RH-EX0089CEZZ	5016A
RH-EX0091CEZZ	5030A
RH-EX0091TAZZ	5022A
RH-EX0092CEZZ	5006A
RH-EX0096CEZZ	5030A
RH-EX0098CEZZ	5080A
RH-EX0101CEZZ	5002A
RH-EX0103CEZZ	5011A
RH-EX0106CEZZ	5047A
RH-EX0130CEZZ	5029A
RH-EX0130GEZZ	5009A
RH-EX0140CEZZ	5014A
RH-EX0207CEZZ	5035A
RH-EX013CEZZ	5078A
RH-EX022CEZZ	5078A
RH-EX0112CEZZ	5027A
RH-EX0113CEZZ	5027A
RH-EX0116GEZZ	5014A
RH-EX0131CEXX	5010A
RH-EX0131CEZZ	5010A
RH-EX0136CEZZ	134A
RH-EX0137CEZZ	5069A
RH-EX0137TAZZ	5009A
RH-EX0138CEZZ	5014A
RH-EX0155CEZZ	519
RH-EX0161CEZZ	5015A
RH-EX0163CEZZ	5049A
RH-EX0163GEZZ	5021T1
RH-EX0192CEZZ	137A
RH-EX0193CEZZ	5020A
RH-EX0217CEZZ	5023A
RH-EX0219CEZZ	5036A
RH-EX0232CEZZ	5000A
RH-EX0443CEZZ	5007A
RH-EX0444CEZZ	5006A
RH-EX0664GEZZ	5035A
RH-EX130CEZZ	5029A
RH-EX219CEZZ	5036A
RH-EZ0084CEZZ	5093A
RH-FX0007CEZZ	3098
RH-FX0011CEZZ	3098
RH-FX0014CEZZ	3092
RH-FX0018CEZZ	3098
RH-IX0001PAZZ	1187
RH-IX0004CE	749

PART NUMBER	NTE REPLACEMENT
RH-IX0004CEZZ	749
RH-IX0005PAZZ	7476
RH-IX0020CE	1004
RH-IX0020CEZZ	1004
RH-IX0040PAZZ	74121
RH-IX0080CEZZ	4071B
RH-IX0012PAZZ	7404
RH-IX0014PAZZ	960
RH-IX0017TAZZ	712
RH-IX0021CEZZ	1080
RH-IX0024CEZZ	1570
RH-IX0025CEZZ	1050
RH-IX0032CEZZ	1089
RH-IX0037CEXX	615P
RH-IX0037CEZZ	615P
RH-IX0038PAZZ	7406
RH-IX0039PAZZ	74107
RH-IX0041PAZZ	74123
RH-IX0042PAZZ	74132
RH-IX0043CE	1045
RH-IX0043CEZZ	712
RH-IX0054CEZZ	1140
RH-IX0065CEZZ	1550
RH-IX0069CEZZ	4001B
RH-IX0072CEZZ	4011B
RH-IX0072PAZZ	74LS03
RH-IX0077CEZZ	4049
RH-IX0078CEZZ	4050B
RH-IX0084CEZZ	4081B
RH-IX0092CEZZ	1413
RH-IX0093CEZZ	1532
RH-IX0094CEZZ	1496
RH-IX0260CEZZ	1658
RH-IX0450CEZZ	1835
RH-IX038CEZZ	1676
RH-IX0111CEZZ	960
RH-IX0114PAZZ	4514B
RH-IX0116CEZZ	7407
RH-IX0137CEZZ	1751
RH-IX0212CEZZ	1671
RH-IX0213CEZZ	1616
RH-IX0214CEZZ	1576
RH-IX0238CEZZ	1676
RH-IX0252CEZZ	1413
RH-IX0275CEZZ	1572
RH-IX0488CEZZ	1217
RH-IX0948CEZZ	1782
RH-IX1020AFZZ	1116
RH-IX1032AFZZ	1237
RH-IX1068AFZZ	1192
RH-IX1190CEZZ	7010
RH-PX0046GEZZ	30001
RH-VX0004TAZZ	605A
RH-VX0009TAZZ	601
RHDX0033TAZZ	177
RHDX0043TAZZ	116
RHDX0086TAZZ	552
RHDX0101CEZZ	552
RHDX0117TAZZ	558
RHDX0123CEZZ	552
RHDX0131CEZZ	552
RHIX0137CEZZ	1751
RI4010658	519
RIN1102	722
RJF60313	113A
RJP20B	580
RK14	586
RK34	586
RK43	586
RK44	586
RK46	579
RK46LF-L1	579
RKZ12003	519
RKZ120101	519
RL005	125
RL010	125
RL020	125
RL040	125
RL060	125
RL1N4002	116
RL2Z	588
RL20	3019
RL31	109
RL32	109
RL32G	109
RL34	109
RL34G	109
RL41	109
RL41G	109
RL42	109
RL50-02	3000
RL52	109
RL55-5	3001
RL101	116
RL102	116
RL103	116
RL104	116
RL105	125
RL106	125
RL107	125
RL201	156
RL202	156
RL203	156
RL204	156
RL205	156
RL206	156
RL207	156
RL209-1	3007
RL232G	109
RL246	109
RL251	5800
RL252	5801
RL253	5802
RL254	5804

PART NUMBER	NTE REPLACEMENT
RL255	5806
RL256	5808
RL257	5809
RL709T	909
RL711T	911
RL3525	1721
RL3525A	1721
RL5054-2	3025
RL-20	3019
RL-50-02	3000
RL-55-5	3001
RL-152	5801
RL-209-1	3007
RLB-17	199
RLF1G	116
RLH111	7410
RM1	552
RM1A	116
RM1B	125
RM1M	552
RM1S	552
RM1Z	552
RM1Z-LR	116
RM1ZLF	116
RM1ZLR	116
RM1ZM	116
RM1ZMV	552
RM1ZV	116
RM2	125
RM2-C-Z	125
RM2A	580
RM2AV	125
RM2C	125
RM2C-LFA1	125
RM2C-Z	125
RM2CS	125
RM2CV	125
RM4	125
RM10B	125
RM10M	125
RM10MV	125
RM11	116
RM11A	580
RM11B	125
RM11BV	580
RM11C	125
RM12	552
RM15	552
RM25	5089A
RM25V	5089A
RM26	5092A
RM26(50V)	5089A
RM26(ZENER)	5092A
RM26V	5092A
RM103	177
RM108	125
RM257	148A
RM741TE	941
RM4558	778A
RM-1	552
RM-1A	506
RM-1AV	116
RM-1B	125
RM-1C	125
RM-1V	116
RM-1Z	116
RM-1ZV	116
RM-2	125
RM-2A	580
RM-2AV	580
RM-2AVTA	580
RM-2C	125
RM-2SC	125
RM-11B	125
RM-12	116
RM-26	116
RM-26(ZENER)	5092A
RM-103	125
RMA2	125
RMPG06D	587
RMPG06G	552
RMPTC0028CEZZ	5023A
RMPTC0059CEZZ	177
RMPTJ0028CEZZ	5023A
RMPTJ0029CEZZ	5013A
RMPTJ0037CEZZ	5023A
RMZ-C-Z	125
RMZC-Z	125
RN515	5940
RN820	5998
RN820R	5999
RN1002	2355
RN1003	2357
RN1004	2359
RN1015	5942
RN1120	6002
RN1120R	6003
RN1202	2355
RN1203	2357
RN1204	2359
RN2002	2356
RN2003	2358
RN2004	2360
RN2015	5944
RN2202	2356
RN2203	2358
RN2204	2360
RN3015	5948
RN4015	5948
RN4918	185
RN4919	185
RN4920	185
RN4921	184
RN4922	184

PART NUMBER	NTE REPLACEMENT
RN4923	184
RN5015	5952
RN5016	5952
RN6015	5952
RN-EDG-1S446	109
RN-EDP-GL-31AR	3007
RN-EDS-1S1555	177
RN-EDS-1S1885	116
RN-EDT-RD4R7EB3	5009A
RN-EVS-2SA850-D	290A
RN-EVS-2SA1015-YG-R	290A
RN-EVS-2SC710-C	85
RN-EVS-2SC828-QR	85
RN-EVS-2SC1317-QR	289A
RNUR8558571	197
RO2A	125
RO102	116
RO130	5882
RO131	5882
RO132	5882
RO134	5882
RO136	5882
RO-2A	125
ROG06752	126
RP-9A	139A
RPG10J	552
RPG-10D	506
RPG-10DG1	116
RPG-108	552
RQ-409S	116
RQ-444S	199
RR0102DM	5812
RR0104DM	5815
RR7504	123AP
RR8068	123AP
RR8070	108
RR8116	108
RR8118	108
RR8119	108
RR8914	123AP
RR8989	108
RR8999	108
RR9036R	6027
RRB24-06	116
RS1C	552
RS1FM-12	116
RS8DT	581
RS8GT	581
RS10	116
RS101	166
RS102	166
RS103	167
RS104	168
RS105	169
RS128	123AP
RS132	128
RS136	123AP
RS204	168
RS220AF	116
RS230AF	116
RS322	102A
RS401	5309
RS401G	5309
RS401L	5318
RS401LG	5309
RS402	5309
RS402G	5309
RS402L	5318
RS402LG	5309
RS403	5309
RS403G	5309
RS403L	5309
RS403LG	5309
RS404	5310
RS404G	5310
RS404L	5319
RS404LG	5310
RS405	5310
RS405G	5310
RS405L	5319
RS405LG	5310
RS406	102A
RS406(BRIDGE)	5311
RS406G	5311
RS406L	5320
RS406LG	5311
RS407	5311
RS407G	5311
RS407L	5320
RS407LG	5311
RS593	160
RS601	5329
RS602	5329
RS603	5329
RS604	5330
RS605	5330
RS606	5331
RS607	5331
RS684	160
RS685	160
RS686	160
RS687	160
RS1045	173BP
RS1049	123AP
RS1059	123AP
RS1192	102A
RS1234	117
RS1264	116
RS1290	139A
RS1296	116
RS1296(SEARS)	506
RS1348	142A
RS1428	177
RS1513	101
RS1524	103A
RS1530	101
RS1531	101
RS1532	101
RS1533	103A
RS1534	101
RS1536	101
RS1537	101
RS1538	101
RS1539	160
RS1540	102A
RS1541	102A
RS1542	102A
RS1543	102A
RS1544	102A
RS1545	102A
RS1546	102A
RS1547	101
RS1548	102A
RS1549	103A
RS1550	160
RS1553	101
RS1554	160
RS1555	102A
RS1720	116
RS1726	108
RS1749	116
RS1805	116
RS1811	109
RS1823	117
RS1832	116
RS2350	102A
RS2351	102A
RS2352	102A
RS2353	102A
RS2354	102A
RS2355	102A
RS2356	101
RS2359	101
RS2360	101
RS2364	101
RS2365	101
RS2366	101
RS2367	102A
RS2373	102A
RS2374	102A
RS2375	101
RS2675	102A
RS2677	102A
RS2679	160
RS2680	160
RS2683	160
RS2684	160
RS2685	160
RS2686	160
RS2687	160
RS2688	160
RS2689	102A
RS2690	100
RS2691	100
RS2692	100
RS2694	160
RS2695	160
RS2696	100
RS2697	102A
RS2801	109
RS2867	102A
RS2914	123AP
RS3211	102A
RS3275	102A
RS3276	102
RS3277	160
RS3278	160
RS3279	160
RS3280	102A
RS3281	100
RS3282	158
RS3283	102A
RS3284	102A
RS3285	102A
RS3286	102A
RS3287	100
RS3288	160
RS3289	102A
RS3293	102A
RS3299	102A
RS3301	102A
RS3306	101
RS3308	102A
RS3309	160
RS3310	102A
RS3316	102A
RS3316-1	102A
RS3316-2	102A
RS3318	102A
RS3322	160
RS3323	160
RS3324	160
RS3358-1	121
RS3359-1	121
RS3570	116
RS3668	160
RS3717	102A
RS3726	102A
RS3727	116
RS3857	102A
RS3858	121
RS3858-1	121
RS3862	160
RS3863	160
RS3864	160
RS3866	102A
RS3867	158
RS3868	160
RS3880	102A
RS3892	100
RS3897	102A
RS3898	160
RS3900	160
RS3901	160
RS3902	160
RS3903	160
RS3904	102A
RS3905	160
RS3906	160
RS3907	160
RS3911	160
RS3912	160
RS3913	102A
RS3914	100
RS3915	100
RS3925	102A
RS3926	102A
RS3929	160
RS3931	103A
RS3959	121
RS3959-1	121
RS3986	160
RS3995	160
RS4001	4001B
RS4011	4011B
RS4013	4013B
RS4017	4017B
RS4020	4020B
RS4027	4027B
RS4050	4050B
RS4518	4518B
RS5008	102A
RS5101	160
RS5102	102A
RS5103	102A
RS5104	100
RS5105	100
RS5106	160
RS5107	160
RS5108	160
RS5109	160
RS5201	160
RS5202	102A
RS5203	102A
RS5204	160
RS5205	160
RS5206	160
RS5207	160
RS5208	160
RS5209	160
RS5243-2	102A
RS5301	160
RS5302	100
RS5303	100
RS5305	160
RS5306	160
RS5311	160
RS5312	160
RS5313	160
RS5314	160
RS5317	160
RS5401	102A
RS5402	100
RS5403	100
RS5406	102A
RS5502	102A
RS5503	102A
RS5504	100
RS5505	102A
RS5506	102A
RS5507	102A
RS5511	100
RS5530	102A
RS5531	102A
RS5532	102A
RS5533	102A
RS5534	102A
RS5535	102A
RS5536	102A
RS5540	100
RS5541	102A
RS5542	102A
RS5543	102A
RS5544	102A
RS5545	102A
RS5551	102A
RS5552	102A
RS5553	102A
RS5554	102A
RS5555	102A
RS5556	102A
RS5557	102A
RS5558	102A
RS5563	102A
RS5564	102A
RS5565	102A
RS5566	102A
RS5567	102A
RS5568	102A
RS5602	102A
RS5603	102A
RS5605	102A
RS5607	102A
RS5608	102A
RS5610	102A
RS5612	121
RS5613	121
RS5614	121
RS5616	121
RS5704	102A
RS5704-2	102A
RS5708	102A
RS5708-2	102A
RS5709	102A
RS5711	102A
RS5715	176
RS5715-1	176
RS5717	102A
RS5717-1	102A
RS5717-3	102A
RS5717-6	102A
RS5720	102A
RS5731	102A
RS5732	102A
RS5733	102A
RS5734	102A
RS5735	102A
RS5736	102A
RS5737	102A
RS5738	102A
RS5740	102A
RS5740-1	102A
RS5742	102A
RS5743	102A
RS5743.3	100
RS5743-1	102A
RS5743-2	102A
RS5743-3	102A
RS5744	102A
RS5744-3	102A
RS5745	102A
RS5746	102A
RS5747	102A
RS5748	102A
RS5749	102A
RS5750	102A
RS5751	102A
RS5752	102A
RS5753	126
RS5753-2	126
RS5754	126
RS5755	126
RS5756	126
RS5757	126
RS5758	126
RS5759	126
RS5760	126
RS5761	126
RS5762	126
RS5765	102A
RS5766	102A
RS5767	102A
RS5768	102A
RS5788	176
RS5802	126
RS5818	160
RS5825	102
RS5835	121
RS5851	123AP
RS5852	102A
RS5853	123AP
RS5854	102A
RS5855	121MP
RS5856	123AP
RS5857	123AP
RS6344	116
RS6461	116
RS6471	116
RS6523	108
RS6705	116
RS6821	126
RS6822	126
RS6824	100
RS6840	102A
RS6843	102
RS6843A	102A
RS6846	102
RS6846A	102A
RS7101	108
RS7102	108
RS7103	123AP
RS7104	108
RS7105	123AP
RS7106	108
RS7107	108
RS7108	123AP
RS7109	108
RS7110	108
RS7111	123AP
RS7112	108
RS7113	108
RS7114	229
RS7115	108
RS7116	108
RS7117	108
RS7118	108
RS7119	108
RS7120	108
RS7121	123AP
RS7122	108
RS7123	108
RS7124	108
RS7125	108
RS7126	108
RS7127	123AP
RS7128	108
RS7129	123AP
RS7132	123AP
RS7133	123AP
RS7135	108
RS7136	123AP
RS7138	108
RS7139	108
RS7140	108
RS7141	108
RS7142	108
RS7143	107
RS7144	108
RS7145	108
RS7160	123AP
RS7161	108
RS7162	108
RS7163	108
RS7164	108
RS7165	108
RS7166	108
RS7167	108
RS7168	108
RS7169	108
RS7170	108
RS7173	229
RS7174	108
RS7175	108
RS7176	108
RS7177	108
RS7201	108
RS7202	108
RS7209	108
RS7210	108
RS7211	108
RS7212	108
RS7214	108
RS7215	108
RS7216	108
RS7217	108
RS7218	108
RS7219	108
RS7220	108
RS7221	108
RS7222	107
RS7223	123AP
RS7224	123AP
RS7225	108
RS7226	123AP
RS7227	108
RS7228	108
RS7229	108
RS7230	108
RS7231	108
RS7232	123AP
RS7233	229
RS7234	123AP
RS7235	123AP
RS7236	123AP
RS7237	108
RS7238	123AP
RS7241	123AP
RS7242	123AP
RS7310	124
RS7311	124
RS7312	124
RS7313	124
RS7315	124
RS7316	124
RS7317	124
RS7318	124
RS7320	124
RS7321	124
RS7327	124
RS7328	124
RS7329	124
RS7330	124
RS7333	108
RS7334	108
RS7365	124
RS7366	124
RS7367	124
RS7368	124
RS7400	7400
RS7402	7402
RS7404	7404
RS7405	123AP
RS7406	123AP
RS7406(IC)	7406
RS7407	123AP
RS7408	123AP
RS7408(IC)	7408
RS7409	123AP
RS7410	123AP
RS7410(IC)	7410
RS7411	123AP
RS7412	123AP
RS7413	123AP
RS7413(IC)	7413
RS7415	123AP
RS7420	7420
RS7421	123AP
RS7427	7427
RS7432	7432
RS7441	7441
RS7447	7447
RS7448	7448
RS7451	7451
RS7473	7473
RS7474	7474
RS7475	7475
RS7476	7476
RS7485	7485
RS7486	7486
RS7490	7490
RS7492	7492
RS7504	123AP
RS7510	123AP
RS7511	108
RS7512	108
RS7513	123AP
RS7513-15	123AP
RS7514	123AP
RS7515	123AP
RS7516	123AP
RS7517	123AP
RS7517-19	123AP
RS7518	123AP
RS7519	123AP
RS7520	108
RS7521	123AP
RS7522	108
RS7523	107
RS7524	108
RS7525	123AP
RS7526	123AP
RS7527	123AP
RS7528	123AP
RS7529	123AP
RS7530	123AP
RS7532	108
RS7533	108
RS7542	123AP
RS7543	123AP
RS7544	123AP
RS7555	123AP
RS7568	102A
RS7606	123AP
RS7607	123AP
RS7609	123AP
RS7610	123AP
RS7611	123AP
RS7612	123AP
RS7613	123AP
RS7614	123AP
RS7620	123AP
RS7621	123AP
RS7622	123AP
RS7623	123AP
RS7624	123AP
RS7625	123AP
RS7626	123AP
RS7627	123AP
RS7628	123AP
RS7634	123AP
RS7635	123AP
RS7636	123AP
RS7637	123AP
RS7638	123AP
RS7639	123AP
RS7640	123AP
RS7641	123AP
RS7642	123AP
RS7643	123AP
RS7665	159
RS7672	128
RS7678	128
RS7814	123AP
RS7916	132
RS8100	129
RS8101	128
RS8102	129
RS8103	128
RS8104	129
RS8105	128
RS8106	129
RS8107	128
RS8108	129
RS8109	128
RS8110	129
RS8111	128
RS8112	129
RS8113	128
RS8406	158
RS8407	103A
RS8420	103A
RS8421	102A
RS8424	158
RS8430	116
RS8441	103A
RS8442	123AP
RS8443	103A
RS8444	102A
RS8445	103A
RS8446	158
RS8503	123AP
RS9510	107
RS9511	107
RS9512	107
RS15048	123AP
RS57042	102A
RS57062	102A
RS57433	102A
RS74123	74123
RS74145	74145
RS74150	74150
RS74154	74154
RS74192	74192
RS74193	74193
RS74196	74196
RS86057332	123AP
RS-05	5800
RS-1	552
RS-35	147A
RS-35/AW01-33	147A
RS-101	160
RS-102	158
RS-103	160
RS-104	101
RS-105	104
RS-106	105
RS-107	123AP
RS-108	123AP
RS-109	108
RS-110	159
RS-253C	177
RS-253S	177
RS-267S	177
RS-272US	177
RS-279US	199
RS-280S	177
RS-406	102A
RS-684	126
RS-685	126
RS-686	102A
RS-687	102A
RS-805US	229
RS-1055	104
RS-1192	102A
RS-1264	116
RS-1347	116
RS-1524	103A
RS-1536	101
RS-1537	101
RS-1538	101
RS-1539	100
RS-1540	102A
RS-1541	102A
RS-1542	102A
RS-1543	102A
RS-1544	102A
RS-1545	101
RS-1546	102A
RS-1547	101
RS-1548	102A
RS-1550	100
RS-1553	101
RS-1554	126
RS-1555	102A
RS-2001	101
RS-2002	160
RS-2003	126
RS-2004	102
RS-2005	102
RS-2006	104
RS-2007	158
RS-2008	154
RS-2009	123AP
RS-2011	161
RS-2012	287
RS-2013	123AP
RS-2014	128
RS-2015	108
RS-2016	123AP
RS-2017	184
RS-2018	210
RS-2019	182
RS-2020	184
RS-2021	159
RS-2022	159
RS-2023	159
RS-2024	159
RS-2025	185
RS-2026	211
RS-2027	183
RS-2028	132
RS-2029	6409
RS-2350	102A
RS-2351	102A
RS-2352	102A
RS-2353	102A
RS-2354	102A
RS-2355	102A
RS-2359	101
RS-2360	101
RS-2364	101
RS-2365	101
RS-2366	101
RS-2367	102A
RS-2373	101
RS-2374	101
RS-2375	101
RS-2675	102A
RS-2677	102A
RS-2683	100
RS-2684	100
RS-2685	100
RS-2686	100
RS-2687	100
RS-2688	100
RS-2689	102A
RS-2690	100
RS-2691	100
RS-2692	100
RS-2694	100
RS-2695	100
RS-2696	100
RS-2697	102A
RS-3275	102A
RS-3276	102A
RS-3277	100
RS-3278	102A
RS-3279	100
RS-3282	102A
RS-3283	102A
RS-3284	102A
RS-3285	102A
RS-3286	102A
RS-3288	100
RS-3289	102A
RS-3299	102A
RS-3301	102A
RS-3308	102A
RS-3309	100
RS-3310	102A
RS-3316	102A
RS-3316-1	102A
RS-3316-2	102A
RS-3318	102A
RS-3322	126
RS-3323	126
RS-3324	126
RS-3570	116

PART NUMBER	NTE REPLACEMENT
RS-3727	116
RS-3858-1	121
RS-3862	126
RS-3863	126
RS-3866	126
RS-3867	100
RS-3868	100
RS-3892	160
RS-3898	160
RS-3900	160
RS-3901	160
RS-3902	160
RS-3903	160
RS-3904	102A
RS-3907	100
RS-3911	160
RS-3913	100
RS-3914	100
RS-3915	100
RS-3925	102A
RS-3926	160
RS-3929	100
RS-5008	102A
RS-5104	100
RS-5105	100
RS-5106	100
RS-5107	126
RS-5108	126
RS-5109	126
RS-5201	126
RS-5205	126
RS-5206	102A
RS-5207	126
RS-5208	160
RS-5209	126
RS-5301	126
RS-5305	126
RS-5306	126
RS-5311	102A
RS-5312	126
RS-5313	126
RS-5401	100
RS-5406	102A
RS-5502	102A
RS-5504	100
RS-5505	102A
RS-5506	102A
RS-5511	100
RS-5530	102A
RS-5531	102A
RS-5532	102A
RS-5533	102A
RS-5534	102A
RS-5535	102A
RS-5536	102A
RS-5540	100
RS-5541	102A
RS-5542	102A
RS-5544	102A
RS-5551	102A
RS-5552	102A
RS-5553	102A
RS-5554	102A
RS-5555	102A
RS-5556	102A
RS-5557	102A
RS-5558	102A
RS-5602	102A
RS-5613	121
RS-5704	102A
RS-5708	102A
RS-5708-2	102A
RS-5709	102A
RS-5711	102A
RS-5717	102A
RS-5717-3	102A
RS-5717-6	102A
RS-5720	102A
RS-5731	102A
RS-5733	102A
RS-5734	102A
RS-5735	176
RS-5736	102A
RS-5737	102A
RS-5742	102A
RS-5743	102A
RS-5743-1	102A
RS-5743-2	102A
RS-5743-3	102A
RS-5744	102A
RS-5744-3	102A
RS-5749	102A
RS-5752	126
RS-5753	126
RS-5753-2	102
RS-5754	126
RS-5755	126
RS-5756	126
RS-5757	126
RS-5758	126
RS-5759	126
RS-5760	126
RS-5761	126
RS-5762	126
RS-5802	126
RS-5818	126
RS-5835	121
RS-5851	123AP
RS-5852	102A
RS-5853	123AP
RS-5854	102A
RS-5855	121
RS-5856	123AP
RS-5857	123AP
RS-6344	116
RS-6461	116
RS-6471	116
RS-7102	108
RS-7103	123AP
RS-7104	108
RS-7105	123AP
RS-7106	108
RS-7107	108
RS-7108	108
RS-7109	108
RS-7110	108
RS-7113	108
RS-7114	108
RS-7115	108
RS-7124	123AP
RS-7127	123AP
RS-7129	123AP
RS-7201	107
RS-7202	108
RS-7212	107
RS-7315	124
RS-7316	124
RS-7317	124
RS-7318	124
RS-7409	123AP
RS-7411	123AP
RS-7412	123AP
RS-7413	123AP
RS-7504	123AP
RS-7511	123AP
RS-7512	108
RS-7606	123AP
RS-7607	123AP
RS-7609	123AP
RS-7610	123AP
RS-7611	123AP
RS-7612	123AP
RS-7613	123AP
RS-7614	123AP
RS-7622	123AP
RS-7623	123AP
RS-7665A	159
RS-57042	102A
RS-57062	102A
RS-LNB0001CEZZ	113A
RSI350	158
RSKK36	176
RSLNA0004CEZZ	120
RSLNB0001CEZZ	113A
RSLND0003CEZZ	506
RSWY/16L7Z	109
RT100	123AP
RT112	107
RT114	123AP
RT115	106
RT121	158
RT141	128
RT150	152
RT151	153
RT152	186
RT154	128
RT155	153
RT159	171
RT175	132
RT176	133
RT180	222
RT185	102A
RT188	128
RT210	125
RT213	116
RT214	116
RT215	116
RT218	177
RT235	135A
RT248	5080A
RT304	123AP
RT476	123AP
RT482	128
RT483	128
RT484	128
RT697M	123AP
RT699M	128
RT929H	123AP
RT930H	108
RT1008	109
RT1106	109
RT1108	109
RT1116	171
RT1184	109
RT1306	136A
RT1306(G.E.)	136A
RT1595	116
RT1667	110MP
RT1669	177
RT1686	506
RT1689	116
RT1840	116
RT1893	171
RT2016	123AP
RT2061(G.E.)	177
RT2230	102A
RT2309	199
RT2329	102A
RT2330	102A
RT2331	102A
RT2332	123AP
RT2334	109
RT2451	110MP
RT2452	109
RT2669	116
RT2694	109
RT2709	102A
RT2914	123AP
RT2915	108
RT3063	123AP
RT3064	123AP
RT3065	159
RT3065A	159
RT3069	108
RT3070	108
RT3071	159
RT3071A	159
RT3072	109
RT3095	108
RT3096	103A
RT3097	102A
RT3098	102A
RT3099	109
RT3225	108
RT3226	108
RT3227	108
RT3228	123AP
RT3229	102A
RT3230	102A
RT3231	102A
RT3232	108
RT3233	109
RT3336	109
RT3361	126
RT3362	126
RT3363	102A
RT3364	102A
RT3365	102A
RT3443	116
RT3449	102A
RT3466	160
RT3467	102A
RT3468	102A
RT3469	109
RT3564	102A
RT3565	123AP
RT3566	102A
RT3567	123AP
RT3568	102A
RT3574	138A
RT3585	116
RT3671	145A
RT3671A	145A
RT3858	116
RT3981	116
RT4050	116
RT4069	116
RT4232	116
RT4293	109
RT4525	160
RT4624	102A
RT4625	158
RT4644	109
RT4760	123AP
RT4761	123AP
RT4762	131
RT4762MHF25	104
RT4764	116
RT4880	110MP
RT5061	108
RT5063	126
RT5070	116
RT5151	128
RT5152	128
RT5200	108
RT5201	108
RT5202	123AP
RT5203	128
RT5204	128
RT5205	108
RT5206	123AP
RT5207	123AP
RT5208	199
RT5211	614
RT5212	110MP
RT5213	109
RT5214	109
RT5215	5071A
RT5216	117
RT5217	117
RT5230	129
RT5379	110MP
RT5385	116
RT5401	128
RT5402	128
RT5403	128
RT5404	128
RT5435	199
RT5464	107
RT5465	107
RT5466	126
RT5467	126
RT5468	102A
RT5470	110MP
RT5471	5071A
RT5472	116
RT5473	614
RT5520	126
RT5521	102A
RT5522	102A
RT5551	123AP
RT5554	177
RT5637	102A
RT5738	110MP
RT5793	137A
RT5900	108
RT5901	108
RT5902	108
RT5903	108
RT5904	108
RT5905	128
RT5906	128
RT5907	128
RT5908	109
RT5909	177
RT5911	116
RT5912	110MP
RT5939	109
RT6105	5072A
RT6105(G.E.)	5072A
RT6119	109
RT6157	108
RT6158	108
RT6159	108
RT6160	108
RT6178	614
RT6179	109
RT6180	109
RT6181	109
RT6182	109
RT6183	109
RT6184	109
RT6189	109
RT6201	108
RT6202	108
RT6203	108
RT6204	107
RT6205	102A
RT6322	116
RT6332	116
RT6600	108
RT6600MHF25	123AP
RT6601	107
RT6602	107
RT6603	614
RT6604	102A
RT6605	116
RT6619	109
RT6728	110MP
RT6729	116
RT6731	109
RT6732	107
RT6733	229
RT6734	102A
RT6735	102A
RT6736	102A
RT6737	229
RT6787	107
RT6789	614
RT6790	1003
RT6791	116
RT6921	123
RT6921MHF25	123AP
RT6922	5010A
RT6923	5072A
RT6988	160
RT6989	123AP
RT6990	102A
RT6991	108
RT7311	124
RT7320	108
RT7321	108
RT7322	123AP
RT7323	108
RT7324	108
RT7325	123AP
RT7326	123AP
RT7327	123AP
RT7329	614
RT7330	109
RT7399	1003
RT7400	103A
RT7401	102A
RT7402	166
RT7511	123AP
RT7514	123AP
RT7515	123AP
RT7517	123AP
RT7518	123AP
RT7528	123AP
RT7538	110MP
RT7539	137A
RT7557	199
RT7558	158
RT7559	199
RT7634	116
RT7636	109
RT7638	123AP
RT7689	109
RT7703	107
RT7704	107
RT7845	123AP
RT7846	158
RT7848	5800
RT7849	116
RT7850	116
RT7851	109
RT7943	123AP
RT7944	103A
RT7945	128
RT7946	177
RT8047	199
RT8193	108
RT8195	123AP
RT8197	123AP
RT8198	123AP
RT8199	117
RT8200	5022A
RT8201	123AP
RT8231	116
RT8330	123AP
RT8331	132
RT8332	123AP
RT8333	229
RT8335	152
RT8336	153
RT8337	199
RT8338	153
RT8339	139A
RT8340	116
RT8442	102A
RT8527	108
RT8602	102A
RT8665	125
RT8666	199
RT8667	132
RT8668	107
RT8669	107
RT8670	290
RT8671	109
RT8779	614
RT8839	117
RT8840	116
RT8841	116
RT8842	158
RT8863	199
RT8895	159
RT61012	109
RT61014	126
RT61015	102A
RT61016	102A
RT69221	123AP
RT-100	123AP
RT-101	294
RT-102	123AP
RT-103	159
RT-104	199
RT-105	199
RT-106	194
RT-107	199
RT-108	199
RT-109	194
RT-110	154
RT-111	171
RT-112	199
RT-113	161
RT-114	128
RT-115	106
RT-118	194
RT-119	103
RT-120	194
RT-121	193
RT-124	104
RT-126	106
RT-127	104
RT-128	124
RT-131	130
RT-133	152
RT-135	198
RT-141	128
RT-147	179
RT-148	180
RT-149	181
RT-150	152
RT-151	153
RT-152	186
RT-154	130
RT-155	153
RT-156	198
RT-157	211
RT-159	171
RT-175	312
RT-176	133
RT-180	222
RT-182	195A
RT-185	102A
RT-188	128
RT-210	125
RT-212	116
RT-213	116
RT-214	116
RT-215	116
RT-218	177
RT-234	134A
RT-236	136A
RT-237	137A
RT-238	5071A
RT-239	138A
RT-240	139A
RT-241	140A
RT-242	5074A
RT-243	142A
RT-244	143A
RT-245	145A
RT-246	5075A
RT-248	5080A
RT-249	146A
RT-250	147A
RT-251	5086A
RT-252	5088A
RT-253	5090A
RT-254	149A
RT-255	150A
RT-256	151A
RT-260	5097A
RT-261	5100A
RT-929-H	123AP
RT-929H	123AP
RT-930H	123AP
RT-1689	109
RT-2016	109
RT-2669	116
RT-3858	116
RT-4232	116
RT-4625	102A
RT-4764	156
RT-6922	135A
RT-8667	312
RT-61012	190
RT-61014	126
RT-61015	158
RT-61016	158
RTA0101	5400
RTA0103	5400
RTA0106	5401
RTA0110	5402
RTA0120	5404
RTA0115	5404
RTB0101	5400
RTB0103	5400
RTB0106	5401
RTB0110	5402
RTB0120	5404
RTB0130	5405
RTB0201	5400
RTB0203	5400
RTB0210	5402
RTB0220	5404
RTB0230	5405
RTB0301	5400
RTB0303	5400
RTB0306	5401
RTB0310	5402
RTB0320	5404
RTB0330	5405
RTB0401	5400
RTB0403	5400
RTB0406	5401
RTB0410	5402
RTB0420	5404
RTB0430	5405
RTB0115	5404
RTB0125	5405
RTB0215	5404
RTB0225	5405
RTB0315	5404
RTB0325	5405
RTB0415	5404
RTB0425	5405
RTC0101	5400
RTC0103	5400
RTC0106	5401
RTC0110	5402
RTC0115	5404
RTD0101	5408
RTD0103	5408
RTD0106	5408
RTD0110	5408
RTD0120	5408
RTD0130	5409
RTD0140	5409
RTD0115	5408
RTD0125	5409
RTD0135	5409
RTJ0201	5400
RTJ0203	5400
RTJ0206	5401
RTJ0210	5402
RTJ0220	5404
RTJ0215	5403
RTN0302	5480
RTN0305	5481
RTN0310	5482
RTN0320	5483
RTN0330	5484
RTN0340	5485
RTN0350	5486
RTN0360	5487
RTN1102	722
RTR0302	5511
RTR0305	5511
RTR0310	5511
RTR0320	5511
RTR0330	5512
RTR0340	5512
RTR0350	5513
RTR0360	5513
RTU0202	5520
RTU0205	5521
RTU0210	5522
RTU0220	5524
RTU0230	5526
RTU0240	5527
RTU0250	5528
RTU0260	5529
RTU0710	5542
RTU0720	5543
RTU0730	5544
RTU0740	5545
RTU0760	5547
RU02	552
RU1	552
RU1A	552
RU1P	552
RU1V	552
RU1Z	552
RU2	552
RU2-LFA1	552
RU2AM	552
RU2AN	552
RU2M	552
RU2N	552
RU2V	506
RU2YX	588
RU3	580
RU3A	552
RU3AM	580
RU3AM-LFB1	580
RU3AN	552
RU3B	552
RU3M	580
RU3N	580
RU3V	580
RU4A	506
RU4A-J1	506
RU4AM	580
RU4AM-LF-J3	580
RU4AM-T3	580
RU4AMK1	580
RU4AMLF-J3	580
RU4AMLF-K2	580
RU4C	506
RU4D	506
RU4DS	506
RU4DS-LFK2	506
RU4M	580
RU4M-LF-J3	580
RU4MLF-K2	580
RU4Y	506
RU4YX	588
RU4YX-LF-J3	588
RU4YXLF-J3	558
RU4YXLF-K2	588
RU4Z	580
RU4ZLF-H	580
RU-1	552
RU-1A	552
RU-1AV	552
RU-1P	552
RU-1V	552
RU-2	552
RU-2M	552
RU-2M(V)	552
RU-2M(V)TA	552
RU-2MV	552
RU-2V	552
RU-3	580
RU-3AM	580
RU-3B	552
RU-4A	506
RU-4D	506
RU-4Z	580
RU-IN	506
RUD2DP22/1B	116
RUR810	597
RUR815	597
RUR820	597
RUR840	598
RUR850	598
RUR860	598
RUR-810	597
RUR-815	597
RUR-820	597
RUR-840	598
RUR-850	598
RUR-860	598
RV06	116
RV06/7825B	116
RV1	552
RV1BA328MR	1170
RV1BA532S	1375
RV1LA3301	1006
RV2	552
RV6.2	5013A
RV1017	177
RV1059	194
RV1068	229
RV1180	102A
RV1181	136A
RV1189	116
RV1226	177
RV1424	116
RV1467	108
RV1468	108
RV1469	108
RV1470	108
RV1471	123AP
RV1472	129
RV1473	128
RV1474	123AP
RV1475	102A
RV1476	5804
RV1477	614
RV1478	116
RV1479	109
RV2068	128
RV2069	129
RV2070	199
RV2071	177
RV2072	116
RV2213	139A
RV2220	116
RV2248	199
RV2249	123AP
RV2250	116
RV2260	193
RV2289	116
RV2327	116
RV2351	159
RV2353	234
RV2354	199
RV2355	290
RV2356	187
RV-2289	116
RVCFV-212A	605A
RVD0.8C22/1A	116
RVD08C22/1A	116
RVD1K110	109
RVD1N34A	109
RVD1N4003LF	116
RVD1N4733A	135A
RVD1N4738	5072A
RVD1N4739	139A
RVD1N4740	140A
RVD1SS54	116
RVD1SV505	614
RVD2-1K110	109
RVD2DP	116

PART NUMBER	NTE REPLACEMENT
RVD2DP22/1B	116
RVD2DP22/1C	166
RVD2DP22/18	116
RVD2DP221B	166
RVD2DP221P	116
RVD2P22/1B	116
RVD4B265J2	116
RVD8MB4	166
RVD8MBA	116
RVD10D1	116
RVD10DC1	116
RVD10DC1R	116
RVD10DC4	116
RVD10E1	116
RVD10E1LF	116
RVD10E11F	116
RVD12B-1	166
RVD14740	140A
RVD-FV212	605A
RVDC08P1	116
RVDC08P1R	113A
RVDCD0033	5070A
RVDD124B	166
RVDD1245	166
RVDDS-410	116
RVDEQA0106S	5070A
RVDEQA0107S	138A
RVDEQA0108S	138A
RVDFV-212	605A
RVDFV211	601
RVDFV212	605A
RVDFV214	605A
RVDGP05A	116
RVDHZ3C1	5005A
RVDKB162A	601
RVDKB162C5	116
RVDKB167	605A
RVDKB262C	605A
RVDKB265J2	177
RVDMZ-206	5070A
RVDMZ206	5070A
RVDMZ208	138A
RVDMZ209	139A
RVDR5R6EB	5070A
RVDR154B	166
RVDRD5A1E	135A
RVDRD5R1EB	135A
RVDRD5R1EBB1	5010A
RVDRD5R6EB	5070A
RVDRD6R2EB	5013A
RVDRD7AN	5071A
RVDRD7R5E	138A
RVDRD7R5EB	138A
RVDRD7R5FB	138A
RVDRD11AN	139A
RVDRD12FB	142A
RVDSC-15	614
RVDSC-L5	614
RVDSC20	614
RVDSD-1	116
RVDSD-1U	116
RVDSD-1Y	116
RVDSD-1Z	156
RVDSD113	614
RVDSD113TA	614
RVDSG-5N	156
RVDSG-5P	156
RVDSMIA02TPA	116
RVDSR3AM2N	116
RVDVD1150L	601
RVDVD1150M	601
RVDVD1210L	177
RVDVD1210M	177
RVDVD1211L	116
RVDVD1212L	177
RVDVD1213	177
RVDVD1250M	177
RVDVD1251L	601
RVDVD1253	601
RVDVD1271ME	519
RVDVD1272LE	519
RVDVD1272ME	519
RVIHD38980A	2061
RVILA3301	1006
RVIMC4080	1083
RVITMS1943	2060
RVITMS1943N2	2060
RVITMS1943NL	2060
RVIUPC20C2	1075A
RVIUPC78L05	977
RVIUPC575	1140
RVRD12FB	145A
RVS2SC645	108
RVTCS1381	123AP
RVTCS1382	159
RVTCS1383	123AP
RVTCS1384	108
RVTCS1473	199
RVTMK10-2	132
RVTMK10-E	132
RVTS22410	123AP
RVTS22411	159
RX090	139A
RX-EX0106CEZZ	5047A
RYN12104	128
RYN121105	123AP
RYN121105-3	123AP
RYN121105-4	123AP
RZ3.3	5005A
RZ3.6	5006A
RZ3.9	5007A
RZ4.7	5009A
RZ5.1	5010A
RZ5.6	5011A
RZ6.2	5013A
RZ6.8	5014A
RZ7.5	5015A
RZ8.2	5016A
RZ9.1	5018A
RZ10	5019A
RZ11	5020A
RZ12	5021A
RZ13	5022A
RZ14	5023A
RZ15	5024A
RZ15A	145A
RZ16	5025A
RZ18	5027A
RZ20	5029A
RZ22	5030A
RZ22A	5030A
RZ25	5032A
RZ27	5033A
RZ27A	146A
RZ27AC	146A
RZ30	5035A
RZ33A	5036A
RZ39A	5038A
RZ47A	5040A
RZ50	5041A
RZ56A	5042A
RZ68A	5045A
RZ82A	5047A
RZ-3	156
RZ-15AB	145A
RZZ3.3	5005A
RZZ3.6	5006A
RZZ3.9	5007A
RZZ4.3	5008A
RZZ4.7	5009A
RZZ5.1	5010A
RZZ5.6	5011A
RZZ6.2	5013A
RZZ6.8	5014A
RZZ7.5	5015A
RZZ8.2	5016A
RZZ9.1	5018A
RZZ10	5019A
RZZ11	5020A
RZZ12	5021A
RZZ13	5022A
RZZ15	5023A
RZZ18	5027A
RZZ22	5030A
RZZ27	5033A
RZZ27-12	146A
RZZ156	145A
S0002	233
S0020	108
S010G	125
S0015	123AP
S0016	108
S0019	159
S0021	108
S0022	123AP
S0023	199
S0024	233
S0025	123AP
S0026	159
S0033	229
S001465	199
S001466	123AP
S001683	128
S022010	123AP
S022011	123AP
S022012	159
S0301L	5417
S0301LS1	5426
S0301LS2	5426
S0301LS3	5426
S0303L	5417
S0303LS1	5426
S0303LS2	5426
S0303LS3	5426
S0304F2	5452
S0304F3	5452
S0304F4	5452
S0306LS2	5426
S0308L	5417
S0308LS2	5426
S0308LS3	5426
S0310L	5417
S0310LS2	5426
S0310LS3	5426
S0402BH	5437
S0402DH	5437
S0402MH	5438
S0407BH	5463
S0407DH	5465
S0407MH	5466
S0407NH	5468
S0410BH	5463
S0410DH	5465
S0410MH	5466
S0410NH	5468
S0501	116
S0501L	5417
S0501LS1	5426
S0501LS2	5426
S0501LS3	5426
S0503L	5417
S0503LS1	5426
S0503LS2	5426
S0503LS3	5426
S0504F1	5453
S0504F2	5453
S0504F3	5453
S0504F4	5453
S0506L	5417
S0506LS2	5426
S0506LS3	5426
S0508L	5417
S0508LS2	5426
S0508LS3	5426
S0510L	5417
S0510LS2	5426
S0510LS3	5426
S0602BH	5437
S0602DH	5437
S0602MH	5438
S0607BH	5463
S0607DH	5465
S0607MH	5466
S0607NH	5468
S026094	234
S0610BH	5463
S0610DH	5465
S0610MH	5466
S0610NH	5468
S006793	199
S006927	199
S0702	139A
S0704	123AP
S007220	128
S007764	199
S0802BH	5437
S0802DH	5437
S0802MH	5438
S0807BH	5463
S0807DH	5465
S0807MH	5466
S0807NH	5468
S0810BH	5463
S0810DH	5465
S0810MH	5466
S0810NH	5468
S0-4295-10	130
S0C228	3047
S01	160
S02	160
S03	160
S04	177
S04-1	177
S04A-1	177
S04B-1	177
S05	116
S07K11	1V010
S07K14	1V014
S07K20	1V020
S07K25	1V025
S07K30	1V030
S07K35	1V035
S07K40	1V040
S07K50	1V050
S07K75	1V075
S07K95	1V095
S07K130	1V130
S07K150	1V150
S07K250	1V250
S07K300	1V300
S011-0	141A
S025	102A
S028	101
S031A	123AP
S037	123AP
S065	158
S065A	102A
S074-005-0001	519
S074-007-0001	177
S074-007-001	177
S082A	112
S088	102A
S0312R	5550
S0316R	5550
S0325C	5534
S0325G	5517
S0325R	5550
S0335C	5534
S0335G	5517
S0335J	5538
S0335K	5538
S0335W	5539
S0365P	5534
S0512R	5550
S0516R	5550
S0525C	5534
S0525G	5517
S0525R	5550
S0535C	5534
S0535J	5538
S0535K	5538
S0555M	5539
S0555W	5539
S017446	159
S019843	159
S023735	159
S024428	123AP
S024987	123AP
S025232	123AP
S025289	123AP
S1	552
S1.5	116
S1.5-01	116
S1-1	116
S1-3052V	1934X
S1-B01-02	116
S1-RECT-35	177
S1-RECT-102	116
S1A	116
S1A060	116
S1A06	116
S1A3	137A
S1A60	116
S1A(SCR)	5402
S1AN6	5852
S1AN12	5872
S1AN15	5894
S1AN15R	5895
S1AN20	5914
S1AN20R	5915
S1AN31	5982
S1AN31R	5983
S1AN40	5982
S1AN40R	5983
S1AN55	6022
S1AN55R	6023
S1AR1	116
S1AR2	116
S1B	116
S1B0101CR	116
S1B0102	116
S1B0102V1	116
S1B0201B	166
S1B0201CR	116
S1B01	116
S1B01-01	552
S1B01-01V	552
S1B01-01W	552
S1B01-02	116
S1B01-02V1	116
S1B01-04	552
S1B01-06	552
S1B01-0226	116
S1B02	116
S1B02-0	116
S1B02-03C	156
S1B02-06CE	116
S1B02-06CRE	116
S1B02-C	116
S1B02-CR	116
S1B02-CR1	178MP
S1B02C	158
S1B1	116
S1B(SCR)	5404
S1B-0306	125
S1B-01-02	116
S1BD1-02	116
S1BN15	5894
S1BN15R	5895
S1BN20	5914
S1BN20R	5915
S1BN31	5982
S1BN31R	5983
S1BN40	5982
S1BN40R	5983
S1BN55	6022
S1BN55R	6023
S1BR2	5852
S1BR5	5944
S1C	125
S1CN1	116
S1CR5	5944
S1D	125
S1D23-13	506
S1D23-15	506
S1D26	506
S1D30-13	506
S1D30-15	506
S1D50B851-A	177
S1D51C052-19	116
S1D51C169-1	116
S1D153	152
S1D(SCR)	5405
S1DR5	5944
S1ER5	5944
S1F	525
S1GR2	5801
S1K40	552
S1L200	116
S1M	5406
S1M1	5800
S1M2	5800
S1OAN6	5890
S1P	506
S1PT225A	56022
S1PT330	56024
S1PT340C	56024
S1PT540B	56026
S1R12B	142A
S1R13B	142A
S1R20	177
S1R80	552
S1R-80	116
S1RB	166
S1RB10	156
S1RB-10	166
S1RBA	166
S1RBA10	5304
S1RC20	116
S1RC20R	116
S1S2	177
S1S3M	585
S1S4M	552
S1S11	109
S1S20	109
S1SD-1	116
S1SD-1HF	116
S1SD-1X	116
S1SM-150-01	116
S1SM-150-02	116
S1SW-05-02	116
S1T20H	506
S1T60-H	552
S1VB	167
S1VB10	166
S1VB10-S	166
S1VB20	167
S1VB40	168
S1VB-10	166
S1WB	5332
S1WB10	5332
S1WB20	5332
S1WB40	5332
S1WB60	5332
S1WB(A)10D	5332
S1WBA40	5332
S1WBA60	5332
S1WBS10	5332
S1Y	5400
S1YY	5401
S2	106
S2A	5402
S2A06	116
S2A10	116
S2A20	5802
S2A30	5804
S2A40	5804
S2A50	5806
S2A60	5806
S2A80	5808
S2A100	5809
S2AN6	5874
S2AN12	5874
S2AO6	5800
S2AR1	116
S2AR2	116
S2B	5404
S2C30	116
S2C40	116
S2C40A	116
S2CN1	5802
S2D	5405
S2D153	196
S2E20	116
S2E60	116
S2E60-1	116
S2E100	125
S2GR2	5802
S2K20	552
S2K49	156
S2M	5406
S2M1	5801
S2M2	5800
S2PB	166
S2V	125
S2VB	5313
S2VB10	5312
S2VB20	5313
S2VC	125
S2VC10	125
S2VC10R	125
S2VC60ZR	116
S2VC602R	116
S2Y	5400
S2YY	5401
S3	106
S3A06	116
S3A1	5801
S3A2	5802
S3A3	5804
S3A4	5804
S3A5	5806
S3A6	5806
S3A8	5808
S3A10	5809
S3AN6	5878
S3AN12	5878
S3AR1	116
S3BA05	5800
S3CN1	5804
S3G4	125
S3GR2	5804
S3M1	5802
S3MX	116
S3V10	156A
S3V20	156A
S3V40	156A
S3V60	156A
S3VC40	156
S3VC40R	156
S3W06Z	5315
S3WB	5315
S3WB60Z	5310
S4	106
S4A06	116
S4A-1-A-3P	121
S4AN6	5878
S4AN12	5878
S4AO6	116
S4AR1	116
S4AR2	116
S4AR30	116
S4C	116
S4CN1	5802
S4FN300	116
S4GR2	5802
S4LS132N	74LS132
S4LS221N	74LS221
S4LS374N	74LS374
S4M1	5804
S4VB	5313
S4VB10	5312
S4VB20	5313
S4VB40	5314
S4VB40F1	5314
S4VB60	5315
S4VB-10	5312
S4VB-10-1	5312
S5AN6	5882
S5AN12	5882
S5AR1	116
S5AR2	116
S5CN1	5804
S5GR2	5806
S5KC20	6240
S5KC20R	6244
S5M1	5804
S5S	116
S5SR	116
S5VB	5313
S5VB10	5312
S5VB20	5313
S5VB40	5314
S5VB40-F1	5314
S5VB60	5315
S5VB-20	5313
S6-3	166
S6-10	140A
S6-10A	140A
S6-10B	140A
S6-10C	140A
S6AN6	5882
S6AN12	5882
S6AR1	116
S6AR2	116
S6B-3-A-3P	121MP
S6BR2	156
S6GR2	5806
S6M1	5806
S7-8	177
S7AN6	5886
S7AN12	5886
S7AR1	125
S7BR2	156
S8-01	5942
S8-06	156
S8-10	156
S8AN6	5886
S8AN12	5886
S8AR1	125
S8AR2	125
S8BR2	156
S8CN1	5808
S8GR2	5808
S8M1	5806
S8P-2-A-3P	102A
S9AH12	5890
S9AN6	5890
S9AN12	5890
S9AR1	125
S9BR2	156
S9L-4-A-3P	102A
S10	116
S10A	116
S10AN6	5890
S10AN12	5890
S10AR1	125
S10AR2	125
S10B01-02	116
S10BR2	156
S10BV1069	5312
S10CN1	5808
S10GR2	5809
S10M1	5808
S10VB10	5312
S10VB20	5313
S10VB40	5314
S10VB60	5315
S11	177
S12-1-A-3P	123AP
S12CN1	5808
S12M1	5809
S13	116
S13A	5804
S14	116
S14A	5804
S14A-1-3P	121
S14K11	2V010
S14K14	2V014
S14K17	2V017
S14K20	2V020
S14K25	2V025
S14K30	2V030
S14K35	2V035
S14K40	2V040
S14K50	2V050
S14K75	2V075
S14K95	2V095
S14K130	2V130
S14K150	2V150
S14K250	2V250
S14K275	2V275
S14K300	2V300
S14K420	2V420
S15	116
S15A	5806
S15S3	6084
S15S4	6084
S16	116
S16A	116
S16B	116
S17	116
S17A	116
S18	116
S18A	116
S18B	116
S19	116
S19A	116
S20	125
S20K130	524V13
S20K150	524V15
S20K250	524V25
S20K275	524V27
S20K300	524V30
S20K420	524V42
S20K460	524V48
S20ND400	116
S20NH400	116
S21	116
S22	116
S22A	116
S23	116
S23A	116
S24	125
S25S2	6094
S25VB10	5322
S25VB20	5322
S25VB40	5324
S25VB60	5326
S26	116
S28	125
S30	116
S30S1S03	6094
S30S1S04	6094
S30S3	6094
S30S3A	6094
S30S4A	6094
S31	116
S32	116
S33	116
S34	116
S35	116
S35S2	6094
S36	116
S37	5870
S38	5870
S39	5872
S40	116
S40A	116
S43	116
S44	116
S46	116
S47	116
S48	116
S49	116
S50	5886
S51	5886
S51A	6007
S51B	6007
S51C	6007
S52	5874
S53	5878
S54B-10	5313
S55	5882
S56	5882
S57	5886
S58	5886
S59	5890
S60S3	6094
S60S4	6094
S61	125
S62	125
S63	125
S65-1-A-3P	160
S65-2-A-3P	103A
S65-4-A-3P	101
S65A-1-3P	160
S65B-1-3P	126
S65C-1-3P	121
S66-1-A-3P	102A
S66-2-A-3P	102A
S66-3-A-3P	102A
S70.00.730	126
S70.01.704	123AP
S70T	160
S72	116
S73	116
S74-3-A-3P	100
S75	116
S77	116
S77A-1-3P	105
S77B-1-3P	121MP
S77C-1-3P	121
S79	116
S81	116
S82	116
S83	116
S84	116
S84A-1-3P	121
S85	116
S86	116
S87TB	160
S88B-1-3P	160
S88C-1-3P	100
S88TB	160
S91	116
S91-A	116
S91-H	116
S91A	5800
S91B	5801
S91H	5800
S92	116
S92-1-A-3P	105
S92-A	116
S92-H	116
S92A	5800
S92H	5800
S93	116
S93.20.709	167
S93.20.714	167
S93.24.401	109
S93.24.601	109
S93.24.604	109
S93A	116
S93H	116
S93SE133	130
S93SE140	130MP
S93SE165	130

PART NUMBER	NTE REPLACEMENT
S94	116
S95	116
S100	125
S101	116
S102	116
S103	116
S104	116
S105	116
S105A	5800
S106	116
S106A	5454
S106A1	5454
S106B1	5455
S106C	5457
S106D	5457
S106F	5453
S106M	5458
S106M1	5458
S106Y	5452
S107	116
S108	116
S110A	5809
S115	116
S118	519
S124AHB	280
S129	116
S130-138	161
S130-251	161
S133-1	123AP
S154	506
S160	177
S169N	123AP
S180	177
S191G	116
S200	116
S201	116
S202	116
S203	116
S204	116
S205	116
S206	116
S208	125
S210	125
S217	116
S218	116
S219	116
S220	116
S221	116
S222	116
S223	116
S224	116
S227	519
S229	5802
S230	116
S232	116
S233	116
S234	116
S235	116
S236	5802
S238	116
S239	116
S240	116
S241	116
S243	116
S250	116
S251	116
S252	116
S253	116
S254	116
S255	116
S256	116
S257	125
S258	125
S260	125
S262	116
S305	130
S305A	130
S305D	130
S306A	175
S353	130
S354	175
S356	130
S400	5878
S409F	128
S410	5872
S411	5874
S413	5878
S415	5882
S417	5886
S420	5872
S421	5874
S423	5878
S425	5882
S427	5886
S428	116
S431	116
S485A	5338
S485B	5338
S485C	5338
S500	106
S500B	5804
S500C	5804
S501	106
S502	177
S502-23XL	500A
S502A	177
S502B	177
S504-0	129
S506	177
S506A	177
S506B	177
S509	177
S509A	177
S509B	177
S520	159
S600	5882
S608	159
S684	160
S685	102A
S686	102A
S687	102A
S715	186
S750	125
S750C	125
S800	5886
S801	186
S808	156
S855	120
S913	118
S926	118
S1000	5848
S1001L	5417
S1001LS1	5426
S1001LS2	5426
S1001LS3	5426
S1003L	5417
S1003LS1	5426
S1003LS2	5426
S1003LS3	5426
S1004F1	5454
S1004F2	5454
S1004F3	5454
S1004F4	5454
S1006L	5417
S1006LS2	5426
S1006LS3	5426
S1007BH	5463
S1007DH	5466
S1007MH	5466
S1007NH	5468
S1008L	5417
S1008LS2	5426
S1008LS3	5426
S1009	108
S1010	5801
S1010BH	5463
S1010DH	5465
S1010L	5417
S1010LS2	5426
S1010LS3	5426
S1010MH	5466
S1010NH	5468
S1012R	5552
S1016	123AP
S1016R	5552
S1019	108
S1020	5802
S1025C	5534
S1025G	5517
S1025R	5552
S1030	5803
S1035C	5534
S1035J	5538
S1035K	5538
S1035W	5539
S1037	108
S1040	5804
S1041	107
S1041-16GN	107
S1044	108
S1047	159
S1050	5805
S1055M	5539
S1055W	5539
S1058	108
S1059	108
S1060	5806
S1061	123AP
S1062	108
S1065	123AP
S1065P	5534
S1066	123AP
S1068	123AP
S1069	123AP
S1070	5808
S1074	123AP
S1074(R)	123AP
S1074R	123AP
S1076	108
S1078	108
S1079	108
S1080	5808
S1080(TRANS)	123AP
S1090	5809
S1122	107
S1126	107
S1128	123AP
S1142	108
S1143	123AP
S1153	108
S1188TV	109
S1201F	125
S1202	157
S1210	5801
S1210BH	5552
S1210DH	5554
S1210MH	5556
S1210NH	5558
S1211N	133
S1212N	133
S1213N	133
S1214N	133
S1215N	133
S1216N	133
S1220	5802
S1221	123AP
S1221A	123AP
S1221N	133
S1222N	133
S1223N	133
S1224N	133
S1225N	133
S1226	123AP
S1226N	133
S1227	108
S1230	5803
S1231N	133
S1232N	133
S1233N	133
S1234N	133
S1235N	133
S1236	196
S1236N	133
S1237	197
S1240	5804
S1241	123AP
S1241N	132
S1242	123AP
S1242N	132
S1243	123AP
S1243N	116
S1245	123AP
S1250	5805
S1260	5806
S1270	5808
S1272	123AP
S1276	108
S1280	5808
S1286	161
S1290	5809
S1296	108
S1298	171
S1307	123AP
S1308	107
S1309	123AP
S1313	108
S1316	108
S1317	108
S1318	108
S1331	123AP
S1331N	123AP
S1331W	123AP
S1332	126
S1348	102A
S1349	102A
S1350	159
S1350A	159
S1360	108
S1361	108
S1362	108
S1363	123AP
S1364	123AP
S1366	154
S1367	159
S1368	128
S1369	123AP
S1373	123AP
S1374	123AP
S1375	210
S1376	211
S1384	110MP
S1403	123AP
S1405	123AP
S1407	154
S1408	108
S1409	108
S1419	123AP
S1420	123AP
S1421	128
S1428	177
S1429-3	123AP
S1430	129
S1431	129
S1432	123AP
S1443	123AP
S1453	123AP
S1475	123AP
S1476	123AP
S1477	159
S1487	123AP
S1502	123AP
S1510	123AP
S1512	123AP
S1514	128
S1516	128
S1517	128
S1520	129
S1523	128
S1525	128
S1526	123AP
S1527	123AP
S1529	123AP
S1530	123AP
S1533	123AP
S1553	177
S1556-2	121
S1559	123AP
S1568	123AP
S1570	123AP
S1600	116
S1610BH	5552
S1610DH	5554
S1610MH	5556
S1610NH	5558
S1612BH	5552
S1612DH	5554
S1612MH	5556
S1612NH	5558
S1619	123AP
S1620	123AP
S1629	123AP
S1636	108
S1639	102A
S1640	160
S1642	128
S1644	128
S1671	128
S1672	158
S1674	108
S1674A	108
S1682	108
S1683	128
S1685	130
S1689	128
S1691	130
S1692	130
S1697	123AP
S1698	129
S1761	123AP
S1761A	123AP
S1761B	123AP
S1761C	123AP
S1762	128
S1764	123AP
S1765	123AP
S1766	123AP
S1768	123AP
S1769	154
S1770	123AP
S1772	123AP
S1773	128
S1777	128
S1784	123AP
S1785	123AP
S1788	123AP
S1801-02	116
S1835	123AP
S1863	129
S1864	128
S1865	130
S1871	123AP
S1874	128
S1878	123AP
S1889	159
S1891	123AP
S1891A	123AP
S1891B	123AP
S1897	107
S1905	130
S1905A	130
S1907	130
S1955	123AP
S1983	129
S1990	234
S1993	123AP
S1998	2060
S2001L	5417
S2001LS2	5426
S2001LS3	5426
S2002	161
S2003-1	130
S2003L	5417
S2003LS1	5426
S2003LS2	5426
S2003LS3	5426
S2003M	5408
S2004F1	5455
S2004F2	5455
S2004F3	5455
S2004F4	5455
S2005	5892
S2006L	5417
S2006LS2	5426
S2006LS3	5426
S2008L	5417
S2008LS2	5426
S2008LS3	5426
S2010	5894
S2010L	5417
S2010LS2	5426
S2010LS3	5426
S2012R	5552
S2015	5896
S2016R	5552
S2020	5896
S2025	5898
S2025C	5534
S2025G	5517
S2025R	5552
S2030	5898
S2034	123AP
S2035	5900
S2035C	5534
S2035G	5517
S2035J	5538
S2035K	5538
S2035W	5539
S2038	199
S2040	5900
S2041	153
S2042	152
S2043	123AP
S2044	123AP
S2045	5902
S2050	5902
S2055M	5539
S2055W	5539
S2059	124
S2060	5904
S2060A	5454
S2060B	5455
S2060C	5456
S2060D	5438
S2060E	5438
S2060F	5437
S2060M	5438
S2060Q	5461
S2060Y	5461
S2061A	5454
S2061B	5455
S2061C	5456
S2061D	5457
S2061E	5438
S2061F	5461
S2061M	5438
S2061Q	5461
S2061Y	5461
S2062A	5454
S2062B	5455
S2062C	5457
S2062D	5438
S2062E	5438
S2062F	5453
S2062M	5438
S2062Y	5452
S2070	5908
S2080	5908
S2085	109
S2087G	177
S2090	5910
S2091	159
S2104	192
S2105	5912
S2110	5914
S2115	5916
S2117	129
S2118	128
S2120	5916
S2121	123AP
S2122	123AP
S2123	123AP
S2124	123AP
S2125	5918
S2128	159
S2129	159
S2130	5918
S2131	107
S2132	107
S2133	107
S2134	107
S2135	5920
S2139B	614
S2140	5920
S2140(RECT)	5920
S2145	5922
S2150	5922
S2159	108
S2160	5924
S2170	5928
S2171	123AP
S2172	123AP
S2180	5928
S2190	5932
S2209	128
S2224	108
S2225	123AP
S2241	130
S2274	129
S2321	175
S2368	129
S2369	128
S2370	129
S2371	128
S2392	130
S2397	123AP
S2398C	129
S2400	128
S2400A	128
S2400B	128
S2401	128
S2401A	128
S2401B	128
S2401C	128
S2402	128
S2402A	128
S2402B	128
S2402C	128
S2403B	130
S2403C	130
S2427	128
S2434	5940
S2434R	5941
S2435	5942
S2435R	5943
S2436	5944
S2436R	5945
S2437	5946
S2437R	5947
S2438	5948
S2438R	5949
S2439	5950
S2439R	5951
S2471	130
S2486	175
S2487	128
S2512BH	5552
S2512DH	5554
S2512MH	5556
S2512NH	5558
S2514BH	5552
S2514DH	5554
S2514MH	5556
S2514NH	5558
S2525	159
S2526	128
S2527	175
S2530	283
S2530A	283
S2581	123AP
S2582	123AP
S2590	123AP
S2593	123AP
S2600B	5427
S2600D	5428
S2600M	5429
S2610B	5504
S2610D	5507
S2610M	5529
S2617	108
S2617(UHF)	107
S2635	123AP
S2636	123AP
S2645	159
S2645A	159
S2648	128
S2710B	5513
S2710D	5513
S2710M	5513
S2716	229
S2718	229
S2719	108
S2741	130
S2771	129
S2775	552
S2794	128
S2800A	5462
S2800B	5463
S2800C	5465
S2800D	5465
S2800M	5466
S2935	123AP
S2944	123AP
S2984	123AP
S2985	123AP
S2986	154
S2988	159
S2988A	159
S2989	123AP
S2991	129
S2992	128
S2993	129
S2994	129
S2995	129
S2996	123AP
S2997	123AP
S2998	123AP
S2999	123AP
S3001	195A
S3002	154
S3004	159
S3004-1715	137A
S3004-1716	177
S3004-1718	137A
S3008	311
S3008(MOT)	311
S3012	129
S3013	311
S3013(MOT)	311
S3016	177
S3016R	601
S3019	108
S3020	108
S3024	210
S3030G	109
S3033	154
S3034	154
S3035	154
S3072	601
S3072C	177
S3073	610
S3105	5980
S3110	5982
S3115	5986
S3120	5986
S3125	5988
S3130	5988
S3135	5990
S3140	5990
S3145	5992
S3150	5992
S3160	5994
S3170	5998
S3180	5998
S3190	6002
S3205	5980
S3210	5982
S3215	5986
S3220	5986
S3225	5988
S3230	5988
S3235	5990
S3240	5990
S3245	5992
S3250	5992
S3260	5994
S3270	5998
S3280	5998
S3290	6002
S3386	129
S3405	6020
S3410	6022
S3415	6026
S3420	6026
S3425	6030
S3430	6030
S3435	6034
S3440	6034
S3445	6038
S3450	6038
S3460	6040
S3470	6042
S3480	6042
S3490	6044
S3577G	109
S3603G	109
S3605	6050
S3610	6050
S3615	6054
S3620	6054
S3625	6058
S3630	6058
S3635	6060
S3639	159
S3640	6060
S3640A	159
S3645	6064
S3650	6064
S3655	159
S3655A	159
S3660	6064
S3670	6068
S3680	6068
S3690	6072
S3700B	230
S3700D	230
S3700M	5351
S3702S	231
S3702SF	231
S3703SF	230
S3704A	231
S3704B	231
S3704D	231
S3704M	231
S3704S	231
S3704SD	230
S3705	6074
S3705M	230
S3706E	231
S3710	6074
S3715	6074
S3720	6074
S3725	6076
S3730	6076
S3735	6076
S3740	6076
S3745	6076
S3750	6076
S3760	6076
S3770	6078
S3771	130
S3776B	109
S3780	6078
S3790	6078
S3800S	308
S3800SF	310
S3838GA	109
S3885G	109
S3900S	310P
S3900SF	310P
S3900SF(RCA)	310P
S3901M	308P
S3901S	308P
S3901S(RCA)	308P
S4001	116
S4001L	5418
S4001LS2	5426
S4001LS3	5426
S4002	161
S4003L	5418
S4003LS1	5426
S4003LS2	5426
S4003LS3	5426
S4003M	5409
S4004F1	5457
S4004F2	5457
S4004F3	5457
S4004F4	5456
S4008L	5418
S4008LS2	5426
S4008LS3	5426
S4010L	5418
S4010LS2	5426
S4010LS3	5426
S4012BH	5536
S4012DH	5536
S4012MH	5536
S4012NH	5536
S4012R	5554
S4014BH	5536
S4014DH	5536
S4014MH	5536
S4014NH	5536
S4016R	5554
S4025C	5534
S4025G	5518
S4025R	5554
S4035C	5534
S4035G	5518
S4035J	5538
S4035K	5538
S4035W	5539
S4055M	5539
S4055W	5539
S4060D	5437
S4065P	5534
S4248	102A
S4249	159
S5000	173BP
S5015	157
S5018	218
S5020	161
S5021	161
S5089-A	116
S5101	65101
S5105	6354
S5105R	6355
S5110	6354
S5110R	6355

PART NUMBER	NTE REPLACEMENT
S5115	6354
S5115R	6355
S5120	6354
S5120R	6355
S5125	6354
S5125R	6355
S5135	6354
S5135R	6355
S5140	6354
S5140R	6355
S5145	6356
S5145R	6357
S5150	6356
S5150R	6357
S5160	6356
S5160R	6357
S5170	6358
S5170R	6359
S5180	6358
S5180R	6359
S5190	6358
S5190R	6359
S5277B	552
S5277D	552
S5277G	116
S5295	552
S5295-G	552
S5295G	552
S5295GTPA2	552
S5295I	552
S5295J	552
S5295JTPA2	552
S5305	6354
S5305R	6355
S5310	6354
S5310R	6355
S5315	6354
S5315R	6355
S5320	6354
S5320R	6355
S5325	6354
S5325R	6355
S5327E	108
S5328E	108
S5330	6354
S5330R	6355
S5335	6354
S5335R	6355
S5340	6354
S5340R	6355
S5345	6356
S5345R	6357
S5350	6356
S5350R	6357
S5360	6356
S5360R	6357
S5370	6358
S5370R	6359
S5380	6358
S5380R	6359
S5390	6358
S5390R	6359
S5456J	156
S5472	157
S5500	116
S5500-D	116
S5500D	116
S5500DTP	116
S5500G	116
S5566B	116
S5566G	116
S5577G	116
S5670E	108
S5800	5424
S5800M	5424
S5955	552
S6001L	5419
S6003L	5419
S6003M	5410
S6004F1	5457
S6004F2	5457
S6004F3	5457
S6004F4	5457
S6005	116
S6006L	5419
S6008L	5419
S6010L	5419
S6010R	5556
S6012R	5556
S6015R	5556
S6016R	5556
S6020R	5556
S6025C	5534
S6025R	5556
S6035C	5534
S6035J	5538
S6035K	5538
S6035W	5540
S6055M	5540
S6055W	5540
S6065P	5534
S6083Q	276
S6087A	308
S6087B	310
S6089	230
S6142	5424
S6142C	5457
S6142G	5457
S6192G	5424
S6200A	5514
S6200B	5514
S6200D	5515
S6200M	5516
S6340G	5457

PART NUMBER	NTE REPLACEMENT
S6344G	5424
S6394G-LC6	5424
S6394GL6	5424
S6394GLC6	5424
S6431M	5547
S6565G	5424
S6565G-(LB)	5424
S6565G-(OEC)	5424
S6801	123AP
S6802	6802
S6802P	6802
S6804	128
S6809	6809
S6809E	6809E
S6809EP	6809E
S6809P	6809
S6810P	6810
S7106	2051
S7106CPL	2051
S7107CPL	2050
S7410M	5360
S7412M	5360
S8016R	5558
S8025R	5558
S8035J	5538
S8035K	5538
S8035W	5540
S8055M	5540
S8055W	5540
S8660	184
S8851	500A
S8856	112
S9100	172A
S9101	253
S9101(HEP)	253
S9102	257
S9121	254
S9140	243
S9140(HEP)	243
S9141	244
S9141(HEP)	244
S9141(IC)	705A
S9516	160
S9524	102A
S9631	123AP
S9923	102A
S10100	5809
S10110	506
S10120	506
S10149	116
S10153	184
S12020-04	152
S12100	5809
S12110	506
S12120	506
S12130	506
S12140	506
S13052V	1934X
S15649	123AP
S15650	161
S15657	161
S15658	161
S15659	161
S15660	128
S17074	113A
S17862	154
S17900	128
S18000	128
S18100	159
S18200	128
S19386	128
S20005	5892
S20100	5910
S20405	5870
S20410	5872
S20415	5874
S20420	5874
S20425	5876
S20430	5876
S20435	5878
S20440	5878
S20445	195A
S20445(RECT)	5880
S20446	237
S20450	5880
S20460	5882
S21100	5932
S21271	109
S21520	175
S21549	128
S21648	107
S22543	123AP
S23130	159
S23579	123AP
S24226	159
S24591	123AP
S24592	199
S24594	129
S24596	123AP
S24597	129
S24598	128
S24612	129
S24612A	129
S24614	128
S24615	129
S24616	128
S25089	1690
S25261	161
S25805	108
S25941	107
S26822	123AP
S27233	128
S27604	161
S27893	229

PART NUMBER	NTE REPLACEMENT
S29445	123AP
S29956	199
S31100	6002
S31551	159
S31866	123AP
S32100	6002
S32417	108
S32550	123AP
S32669	108
S32903	184
S33291	124
S33529	153
S33530	152
S33755	123AP
S33886	129
S33886A	129
S33990	108
S34100	6044
S34540	123AP
S35232	161
S35233	108
S35486	180
S35487	181
S36100	6072
S36951	289
S36999	123AP
S37100	6078
S37110	6078
S37120	6078
S37162	196
S37165	153
S37166	152
S37182	123AP
S37214	123AP
S37423	123AP
S38763	123AP
S38787	123AP
S38854	123AP
S39094	159
S39261	153
S39262	152
S39509	189
S39560	154
S39868	190
S40204	161
S40205	154
S40448	281
S40449	280
S40545	107
S50440	6354
S51100	6358
S51100R	6359
S52951	552
S53100	6358
S53100R	6359
S67794	124
S67809	121
S88509	500A
S88570	500A
S88576	112
S95101	160
S95102	160
S95103	160
S95104	160
S95106	160
S95125	108
S95125A	108
S95126	108
S95126A	108
S95201	102A
S95202	123AP
S95203	102A
S95204	158
S95206	102A
S95207	102A
S95214	102A
S95218	102A
S95252	157
S95253	121
S95253-1	121
S99101	160
S99102	160
S99103	160
S99104	160
S99201	102A
S99203	158
S99218	102A
S99252	157
S326690	108
S413796	102
S1977634	130
S2041635	102A
S2042634	103A
S8660121-808	184
S-050	116
S-0501	116
S-05	116
S-05-005	116
S-05-01	116
S-05/01	125
S-1.5	116
S-1.5-0	116
S-2	116
S-3MX	116
S-4C	506
S-5S	116
S-5SR	116
S-10	116
S-12	5802
S-12A	5802
S-15	116
S-15-10	116
S-15H	506
S-17	116

PART NUMBER	NTE REPLACEMENT
S-17A	116
S-34	506
S-39T	121
S-40T	121
S-40TB	121
S-41T	121
S-42T	121
S-43T	121
S-46T	121
S-48T	121
S-49T	121
S-55TB	126
S-58TB	121
S-70T	126
S-80T	126
S-85	184
S-86	184
S-87TB	126
S-88TB	126
S-99	177
S-99(1SS53)	519
S-99(1SS55)	519
S-102V	116
S-262	116
S-305	130
S-305-PD	130
S-305A	130
S-310E	152
S-320F	129
S-356	130
S-371	160
S-437	129
S-437F	129
S-500	125
S-500B	116
S-500C	116
S-522	192
S-798	116
S-810	116
S-873TB	160
S-874TB	160
S-1019	107
S-1019(UHF)	107
S-1037	108
S-1041	108
S-1058	108
S-1059	108
S-1060	108
S-1061	123AP
S-1062	108
S-1065	123AP
S-1066	123AP
S-1068	123AP
S-1078	108
S-1079	108
S-1128	123AP
S-1143	123AP
S-1153	108
S-1221	123AP
S-1221A	123AP
S-1227	108
S-1245	123AP
S-1276	108
S-1286	108
S-1296	108
S-1313	107
S-1316	108
S-1317	108
S-1318	108
S-1331W	123AP
S-1348	102A
S-1349	102A
S-1360	108
S-1361	108
S-1362	108
S-1363	123AP
S-1364	123AP
S-1367A	159
S-1403	123AP
S-1408	108
S-1409	108
S-1453	103
S-1512	123AP
S-1533	123AP
S-1556-2	121
S-1559	123AP
S-1639	102A
S-1640	160
S-2041-8661	9944
S-2064-G	519
S-2200-1135	74H04
S-2617	107
S-3016R	177
S-5277B	116
S-5328E	108
S-5670-E	108
S-20446	195A
S-21271	109
S-88569	500A
S-88570	500A
S-88571	500A
S-88576	112
S-95101	126
S-95102	126
S-95103	126
S-95125	108
S-95125A	108
S-95126	108
S-95126A	108
S-95201	102A
S-95202	103A
S-95204	102A
S-95253	121
S-95253-1	121

PART NUMBER	NTE REPLACEMENT
S-95596	966
S-05	116
S-RECT-174	113A
SA1M1	5801
SA2	116
SA2B	116
SA2H	125
SA2M1	5802
SA2Z	125
SA3B	116
SA3M1	5804
SA5M1	5806
SA6M1	5806
SA7	101
SA8-1-A-3P	160
SA8M1	5808
SA10M1	5809
SA12A	100
SA12B	100
SA12C	100
SA12D	100
SA12E	100
SA12F	100
SA12G	100
SA12L	100
SA12M	100
SA12R	100
SA12T	100
SA12X	100
SA12Y	100
SA13A(TRANS)	100
SA13B	100
SA13C	100
SA13D	100
SA13E	100
SA13F	100
SA13G	100
SA13L	100
SA13M	100
SA13R	100
SA13T	100
SA13X	100
SA13Y	100
SA14A	100
SA14B	100
SA14C	100
SA14D	100
SA14E	100
SA14F	100
SA14G	100
SA14L	100
SA14M	100
SA14R	100
SA14T	100
SA14X	100
SA14Y	100
SA15A	160
SA15B	160
SA15C	160
SA15D	160
SA15E	160
SA15F	160
SA15G	160
SA15L	160
SA15M	160
SA15N	160
SA15R	160
SA15T	160
SA15V	102A
SA15X	160
SA15Y	160
SA16A	100
SA16B	100
SA16C	100
SA16D	100
SA16E	100
SA16F	100
SA16G	100
SA16L	100
SA16M	100
SA16R	100
SA16T	100
SA16X	100
SA16Y	100
SA17A	100
SA17B	100
SA17C	100
SA17D	100
SA17E	100
SA17F	100
SA17G	100
SA17L	100
SA17M	100
SA17R	100
SA17T	100
SA17X	100
SA17Y	100
SA18A	126
SA18B	126
SA18C	126
SA18D	126
SA18E	126
SA18F	126
SA18G	126
SA18L	126
SA18M	126
SA18R	126
SA18T	126
SA18X	126
SA18Y	126
SA19A	126
SA19B	126
SA19C	126
SA19D	126

PART NUMBER	NTE REPLACEMENT
SA19E	126
SA19F	126
SA19G	126
SA19L	126
SA19M	126
SA19R	126
SA19T	126
SA19X	126
SA19Y	126
SA20A	126
SA20B	126
SA20C	126
SA20D	126
SA20E	126
SA20F	126
SA20G	126
SA20L	126
SA20M	126
SA20R	126
SA20T	126
SA20X	126
SA20Y	126
SA21A	126
SA21B	126
SA21C	126
SA21D	126
SA21E	126
SA21F	126
SA21G	126
SA21L	126
SA21M	126
SA21R	126
SA21T	126
SA21X	126
SA21Y	126
SA26A	100
SA26B	100
SA26C	100
SA26D	100
SA26E	100
SA26F	100
SA26G	100
SA26L	100
SA26M	100
SA26R	100
SA26T	100
SA26X	100
SA26Y	100
SA28A	100
SA28B	100
SA28C	100
SA28D	100
SA28E	100
SA28F	100
SA28G	100
SA28L	100
SA28M	100
SA28R	100
SA28T	100
SA28X	100
SA28Y	100
SA29	158
SA29A	126
SA29B	126
SA29C	126
SA29D	126
SA29E	126
SA29F	126
SA29G	126
SA29L	126
SA29M	126
SA29R	126
SA29T	126
SA29X	126
SA29Y	126
SA30A(TRANS)	100
SA30B(TRANS)	100
SA30C(TRANS)	100
SA30D	100
SA30E	100
SA30F	100
SA30G	100
SA30L	100
SA30M	100
SA30R	100
SA30T	100
SA30X	100
SA30Y	100
SA31A	100
SA31B	100
SA31C	100
SA31D	100
SA31E	100
SA31F	100
SA31G	100
SA31L	100
SA31M	100
SA31R	100
SA31T	100
SA31X	100
SA31Y	100
SA32A	100
SA32B	100
SA32C	100
SA32D	100
SA32E	100
SA32F	100
SA32G	100
SA32L	100
SA32M	100
SA32R	100
SA32T	100
SA32X	100
SA32Y	100

PART NUMBER	NTE REPLACEMENT
SA33	102A
SA33BRN	102A
SA33RED	102A
SA35A	100
SA35B	100
SA35C	100
SA35E	100
SA35F	100
SA35G	100
SA35L	100
SA35M	100
SA35R	100
SA35T	100
SA35X	100
SA35Y	100
SA36A	100
SA36B	100
SA36C	100
SA36D	100
SA36E	100
SA36F	100
SA36G	100
SA36L	100
SA36M	100
SA36R	100
SA36T	100
SA36X	100
SA36Y	100
SA37A	100
SA37B	100
SA37C	100
SA37D	100
SA37E	100
SA37F	100
SA37G	100
SA37L	100
SA37M	100
SA37R	100
SA37T	100
SA37X	100
SA37Y	100
SA38A	100
SA38B	100
SA38C	100
SA38D	100
SA38E	100
SA38F	100
SA38G	100
SA38L	100
SA38M	100
SA38R	100
SA38T	100
SA38X	100
SA38Y	100
SA39A	100
SA39B	100
SA39C	100
SA39D	100
SA39E	100
SA39F	100
SA39G	100
SA39L	100
SA39M	100
SA39R	100
SA39T	100
SA39X	100
SA39Y	100
SA40A	100
SA40B	100
SA40C	100
SA40D	100
SA40E	100
SA40F	100
SA40G	100
SA40L	100
SA40M	100
SA40R	100
SA40T	100
SA40X	100
SA40Y	100
SA41A	100
SA41B	100
SA41C	100
SA41D	100
SA41E	100
SA41F	100
SA41G	100
SA41L	100
SA41M	100
SA41R	100
SA41T	100
SA41X	100
SA41Y	100
SA42A	176
SA42B	176
SA42C	176
SA42D	176
SA42E	176
SA42F	176
SA42G	176
SA42L	176
SA42M	176
SA42R	176
SA42T	176
SA42X	176
SA42Y	176
SA43A	160
SA43B	160
SA43C	160
SA43D	160
SA43E	160
SA43F	160
SA43G	160
SA43L	160

PART NUMBER	NTE REPLACEMENT
SA43M	160
SA43R	160
SA43T	160
SA43X	160
SA43Y	160
SA44A	100
SA44B	100
SA44C	100
SA44D	100
SA44E	100
SA44F	100
SA44G	100
SA44L	100
SA44M	100
SA44R	100
SA44T	100
SA44X	100
SA44Y	100
SA45A	160
SA45B	160
SA45C	160
SA45D	160
SA45E	160
SA45F	160
SA45G	160
SA45L	160
SA45M	160
SA45R	160
SA45T	160
SA45X	160
SA45Y	160
SA49A	100
SA49B	100
SA49C	100
SA49D	100
SA49E	100
SA49F	100
SA49G	100
SA49L	100
SA49M	100
SA49R	100
SA49T	100
SA49X	100
SA49Y	100
SA50	159
SA50A	159
SA51	159
SA51A	159
SA52	159
SA52A	159
SA52AC	159
SA52B	159
SA52BC	159
SA53	159
SA53A	159
SA54	159
SA54A	159
SA55	159
SA55A	159
SA56	159
SA56A	159
SA70	159
SA70A	159
SA71A	160
SA71B	160
SA71C	160
SA71D	160
SA71E	160
SA71F	160
SA71G	160
SA71L	160
SA71M	160
SA71R	160
SA71T	160
SA71X	160
SA71Y	160
SA72A	160
SA72B	160
SA72C	160
SA72D	160
SA72E	160
SA72F	160
SA72G	160
SA72L	160
SA72M	160
SA72R	160
SA72T	160
SA72X	160
SA72Y	160
SA73A	160
SA73B	160
SA73C	160
SA73D	160
SA73E	160
SA73F	160
SA73G	160
SA73L	160
SA73M	160
SA73R	160
SA73T	160
SA73X	160
SA73Y	160
SA74A	160
SA74B	160
SA74C	160
SA74D	160
SA74E	160
SA74F	160
SA74G	160
SA74HV05CDA	931
SA74L	160
SA74M	160
SA74R	160
SA74T	160
SA74X	160
SA74Y	160
SA75A	100
SA75B	100
SA75C	100
SA75D	100
SA75E	100
SA75F	100
SA75G	100
SA75L	100
SA75M	100
SA75R	100
SA75T	100
SA75X	100
SA75Y	100
SA76A	160
SA76B	160
SA76C	160
SA76D	160
SA76E	160
SA76F	160
SA76G	160
SA76L	160
SA76M	160
SA76R	160
SA76T	160
SA76X	160
SA76Y	160
SA77A	160
SA77B	160
SA77C	160
SA77D	160
SA77E	160
SA77F	160
SA77G	160
SA77L	160
SA77M	160
SA77R	160
SA77T	160
SA77X	160
SA77Y	160
SA78A	160
SA78B	160
SA78C	160
SA78D	160
SA78E	160
SA78F	160
SA78G	160
SA78HV12CDA	933
SA78HV12CU	966
SA78L	160
SA78M	160
SA78MHV12CU	966
SA78R	160
SA78T	160
SA78V05CU	960
SA78X	160
SA78Y	160
SA79A	176
SA79B	176
SA79C	176
SA79D	176
SA79E	176
SA79F	176
SA79G	176
SA79L	176
SA79M	176
SA79R	176
SA79T	176
SA79X	176
SA79Y	176
SA80A	160
SA80B	160
SA80C	160
SA80D	160
SA80E	160
SA80F	160
SA80G	160
SA80L	160
SA80M	160
SA80R	160
SA80T	160
SA80X	160
SA80Y	160
SA81A	126
SA81B	126
SA81C	126
SA81D	126
SA81E	126
SA81F	126
SA81G	126
SA81L	126
SA81M	126
SA81R	126
SA81T	126
SA81X	126
SA81Y	126
SA82A	126
SA82B	126
SA82C	126
SA82D	126
SA82E	126
SA82F	126
SA82G	126
SA82L	126
SA82M	126
SA82R	126
SA82T	126
SA83A	160
SA83B	160
SA83C	160
SA83D	160
SA83E	160
SA83F	160
SA83G	160
SA83L	160
SA83M	160
SA83R	160
SA83T	160
SA83X	160
SA83Y	160
SA84A	160
SA84B	160
SA84C	160
SA84D	160
SA84E	160
SA84F	160
SA84G	160
SA84L	160
SA84M	160
SA84R	160
SA84T	160
SA84X	160
SA84Y	160
SA85A	126
SA85B	126
SA85C	126
SA85D	126
SA85E	126
SA85F	126
SA85G	126
SA85L	126
SA85M	126
SA85R	126
SA85T	126
SA85X	126
SA85Y	126
SA86A	176
SA86B	176
SA86C	176
SA86D	176
SA86E	176
SA86F	176
SA86G	176
SA86L	176
SA86M	176
SA86R	176
SA86T	176
SA86X	176
SA86Y	176
SA87A	160
SA87B	160
SA87C	160
SA87D	160
SA87E	160
SA87F	160
SA87G	160
SA87L	160
SA87M	160
SA87R	160
SA87T	160
SA87X	160
SA87Y	160
SA90A	160
SA90B	160
SA90C	160
SA90D	160
SA90E	160
SA90F	160
SA90G	160
SA90L	160
SA90M	160
SA90R	160
SA90T	160
SA90X	160
SA90Y	160
SA92A	160
SA92B	160
SA92C	160
SA92D	160
SA92E	160
SA92F	160
SA92G	160
SA92L	160
SA92M	160
SA92R	160
SA92T	160
SA92X	160
SA92Y	160
SA93A	160
SA93B	160
SA93C	160
SA93D	160
SA93E	160
SA93F	160
SA93G	160
SA93L	160
SA93M	160
SA93R	160
SA93T	160
SA93X	160
SA93Y	160
SA94A	126
SA94B	126
SA94C	126
SA94D	126
SA94E	126
SA94F	126
SA94G	126
SA94L	126
SA94M	126
SA94R	126
SA94T	126
SA94X	126
SA94Y	126
SA95A	159
SA95B	159
SA95C	159
SA95D	159
SA95E	159
SA95F	159
SA95G	159
SA95L	159
SA95M	159
SA95R	159
SA95T	159
SA95X	159
SA95Y	159
SA100A	100
SA100B	100
SA100C	100
SA100D	100
SA100E	100
SA100F	100
SA100G	100
SA100L	100
SA100M	100
SA100R	100
SA100T	100
SA100X	100
SA100Y	100
SA101A	160
SA101B	160
SA101C	160
SA101D	160
SA101E	160
SA101F	160
SA101G	160
SA101L	160
SA101M	160
SA101R	160
SA101T	160
SA101X	160
SA101Y	160
SA102	126
SA102A	160
SA102B	160
SA102C	160
SA102D	160
SA102E	160
SA102F	160
SA102G	160
SA102L	160
SA102M	160
SA102R	160
SA102T	160
SA102X	160
SA102Y	160
SA103A	160
SA103B	160
SA103C	160
SA103D	160
SA103E	160
SA103F	160
SA103G	160
SA103L	160
SA103M	160
SA103R	160
SA103T	160
SA103X	160
SA103Y	160
SA104A	160
SA104B	160
SA104C	160
SA104D	160
SA104E	160
SA104F	160
SA104G	160
SA104L	160
SA104M	160
SA104R	160
SA104T	160
SA104X	160
SA104Y	160
SA105A	126
SA105B	126
SA105C	126
SA105D	126
SA105E	126
SA105F	126
SA105G	126
SA105L	126
SA105M	126
SA105R	126
SA105T	126
SA105X	126
SA105Y	126
SA106A	160
SA106B	160
SA106C	160
SA106D	160
SA106E	160
SA106F	160
SA106G	160
SA106L	160
SA106M	160
SA106R	160
SA106T	160
SA106X	160
SA106Y	160
SA107B	160
SA107C	160
SA107D	160
SA107E	160
SA107F	160
SA107G	160
SA107L	160
SA107M	160
SA107R	160
SA107T	160
SA107X	160
SA107Y	160
SA108A	160
SA108B	160
SA108C	160
SA108D	160
SA108E	160
SA108F	160
SA108G	160
SA108L	160
SA108M	160
SA108R	160
SA108T	160
SA108X	160
SA108Y	160
SA109A	160
SA109B	160
SA109C	160
SA109D	160
SA109E	160
SA109F	160
SA109G	160
SA109L	160
SA109M	160
SA109R	160
SA109T	160
SA109X	160
SA109Y	160
SA110A	160
SA110B	160
SA110C	160
SA110D	160
SA110E	160
SA110F	160
SA110G	160
SA110L	160
SA110M	160
SA110R	160
SA110T	160
SA110X	160
SA110Y	160
SA111A	160
SA111B	160
SA111C	160
SA111D	160
SA111E	160
SA111F	160
SA111G	160
SA111L	160
SA111M	160
SA111R	160
SA111T	160
SA111X	160
SA111Y	160
SA112A	160
SA112B	160
SA112C	160
SA112D	160
SA112E	160
SA112F	160
SA112G	160
SA112L	160
SA112M	160
SA112R	160
SA112T	160
SA112X	160
SA112Y	160
SA113A	160
SA113B	160
SA113C	160
SA113D	160
SA113E	160
SA113F	160
SA113G	160
SA113L	160
SA113M	160
SA113R	160
SA113T	160
SA113X	160
SA113Y	160
SA114A	160
SA114B	160
SA114C	160
SA114D	160
SA114E	160
SA114F	160
SA114G	160
SA114L	160
SA114M	160
SA114R	160
SA114T	160
SA114X	160
SA114Y	160
SA115A	160
SA115B	160
SA115C	160
SA115D	160
SA115E	160
SA115F	160
SA115G	160
SA115L	160
SA115M	160
SA115R	160
SA115T	160
SA115X	160
SA115Y	160
SA116A	160
SA116B	160
SA116C	160
SA116D	160
SA116E	160
SA116F	160
SA116G	160
SA116L	160
SA116M	160
SA116R	160
SA116T	160
SA116X	160
SA116Y	160
SA117A	160
SA117B	160
SA117C	160
SA117D	160
SA117E	160
SA117F	160
SA117G	160
SA117L	160
SA117M	160
SA117R	160
SA117T	160
SA117X	160
SA117Y	160
SA118A	160
SA118B	160
SA118C	160
SA118D	160
SA118E	160
SA118F	160
SA118G	160
SA118L	160
SA118M	160
SA118R	160
SA118T	160
SA118X	160
SA118Y	160
SA121A	160
SA121B	160
SA121C	160
SA121D	160
SA121E	160
SA121F	160
SA121G	160
SA121L	160
SA121M	160
SA121R	160
SA121T	160
SA121X	160
SA121Y	160
SA122A	160
SA122B	160
SA122C	160
SA122D	160
SA122E	160
SA122F	160
SA122G	160
SA122L	160
SA122M	160
SA122R	160
SA122T	160
SA122X	160
SA122Y	160
SA123A	160
SA123B	160
SA123C	160
SA123D	160
SA123E	160
SA123F	160
SA123G	160
SA123L	160
SA123M	160
SA123R	160
SA123T	160
SA123X	160
SA123Y	160
SA124A	160
SA124B	160
SA124C	160
SA124D	160
SA124E	160
SA124F	160
SA124G	160
SA124L	160
SA124M	160
SA124R	160
SA124T	160
SA124X	160
SA124Y	160
SA125A	160
SA125B	160
SA125C	160
SA125D	160
SA125E	160
SA125F	160
SA125G	160
SA125L	160
SA125M	160
SA125R	160
SA125T	160
SA125X	160
SA125Y	160
SA128	102A
SA128-1	176
SA129A	126
SA129B	126
SA129C	126
SA129D	126
SA129E	126
SA129F	126
SA129G	126
SA129L	126
SA129M	126
SA129R	126
SA129T	126
SA129X	126
SA129Y	126
SA130A	160
SA130B	160
SA130C	160
SA130D	160
SA130E	160
SA130F	160
SA130G	160
SA130L	160
SA130M	160
SA130R	160
SA130T	160
SA130X	160
SA130Y	160
SA131A	100
SA131B	100
SA131C	100
SA131D	100
SA131E	100
SA131F	100
SA131G	100
SA131L	100
SA131M	100
SA131R	100
SA131T	100
SA131X	100
SA131Y	100
SA132A	100
SA132B	100
SA132C	100
SA132D	100
SA132E	100
SA132F	100
SA132G	100
SA132L	100
SA132M	100
SA132R	100
SA132T	100
SA132X	100
SA132Y	100
SA133A	160
SA133B	160
SA133C	160
SA133D	160
SA133E	160
SA133F	160
SA133G	160
SA133L	160
SA133M	160
SA133R	160
SA133T	160
SA133X	160
SA133Y	160
SA134A	160
SA134B	160
SA134C	160
SA134D	160
SA134E	160
SA134F	160
SA134G	160
SA134L	160
SA134M	160
SA134R	160
SA134T	160
SA134X	160
SA134Y	160
SA135A	100
SA135B	100
SA135C	100
SA135D	100
SA135E	100
SA135F	100
SA135G	100
SA135L	100
SA135M	100
SA135R	100
SA135T	100
SA135X	100
SA135Y	100
SA136A	160
SA136B	160
SA136C	160
SA136D	160
SA136E	160
SA136F	160
SA136G	160
SA136L	160
SA136M	160
SA136R	160
SA136T	160
SA136X	160
SA136Y	160
SA137A	100
SA137B	100
SA137C	100
SA137D	100
SA137E	100
SA137F	100
SA137G	100
SA137L	100
SA137M	100
SA137R	100
SA137T	100
SA137X	100
SA137Y	100
SA139A	160
SA139B	160
SA139C	160
SA139D	160
SA139E	160
SA139F	160
SA139G	160
SA139L	160
SA139M	160
SA139R	160
SA139T	160
SA139X	160
SA139Y	160
SA141A	160
SA141B	160

PART NUMBER	NTE REPLACEMENT
SA141C	160
SA141D	160
SA141E	160
SA141F	160
SA141G	160
SA141L	160
SA141M	160
SA141R	160
SA141T	160
SA141X	160
SA141Y	160
SA142A	160
SA142B	160
SA142C	160
SA142D	160
SA142E	160
SA142F	160
SA142G	160
SA142L	160
SA142M	160
SA142R	160
SA142T	160
SA142X	160
SA142Y	160
SA143A	160
SA143B	160
SA143C	160
SA143D	160
SA143E	160
SA143F	160
SA143G	160
SA143L	160
SA143M	160
SA143R	160
SA143T	160
SA143X	160
SA143Y	160
SA144A	100
SA144B	100
SA144C	100
SA144D	100
SA144E	100
SA144F	100
SA144G	100
SA144L	100
SA144M	100
SA144R	100
SA144T	100
SA144X	100
SA144Y	100
SA145A	100
SA145B	100
SA145C	100
SA145D	100
SA145E	100
SA145F	100
SA145G	100
SA145L	100
SA145M	100
SA145R	100
SA145T	100
SA145X	100
SA145Y	100
SA146A	100
SA146B	100
SA146C	100
SA146D	100
SA146E	100
SA146F	100
SA146G	100
SA146L	100
SA146M	100
SA146R	100
SA146T	100
SA146X	100
SA146Y	100
SA147A	100
SA147B	100
SA147C	100
SA147D	100
SA147E	100
SA147F	100
SA147G	100
SA147L	100
SA147M	100
SA147R	100
SA147T	100
SA147X	100
SA147Y	100
SA148A	100
SA148B	100
SA148C	100
SA148D	100
SA148E	100
SA148F	100
SA148G	100
SA148L	100
SA148M	100
SA148R	100
SA148T	100
SA148X	100
SA148Y	100
SA149A	100
SA149B	100
SA149C	100
SA149D	100
SA149E	100
SA149F	100
SA149G	100
SA149L	100
SA149M	100
SA149R	100
SA149T	100
SA149X	100
SA149Y	100
SA150A	126
SA150B	126
SA150C	126
SA150D	126
SA150E	126
SA150F	126
SA150G	126
SA150L	126
SA150M	126
SA150R	126
SA150T	126
SA150X	126
SA150Y	126
SA151A	100
SA151B	100
SA151C	100
SA151D	100
SA151E	100
SA151F	100
SA151G	100
SA151L	100
SA151M	100
SA151R	100
SA151T	100
SA151X	100
SA151Y	100
SA152A	100
SA152B	100
SA152C	100
SA152D	100
SA152E	100
SA152F	100
SA152G	100
SA152L	100
SA152M	100
SA152R	100
SA152T	100
SA152X	100
SA152Y	100
SA153A	160
SA153B	160
SA153C	160
SA153D	160
SA153E	160
SA153F	160
SA153G	160
SA153L	160
SA153M	160
SA153R	160
SA153T	160
SA153X	160
SA153Y	160
SA154A	160
SA154B	160
SA154C	160
SA154D	160
SA154E	160
SA154F	160
SA154G	160
SA154L	160
SA154M	160
SA154R	160
SA154T	160
SA154X	160
SA154Y	160
SA155A	160
SA155B	160
SA155C	160
SA155D	160
SA155E	160
SA155F	160
SA155G	160
SA155L	160
SA155M	160
SA155R	160
SA155T	160
SA155X	160
SA155Y	160
SA156A	160
SA156B	160
SA156C	160
SA156D	160
SA156E	160
SA156F	160
SA156G	160
SA156L	160
SA156M	160
SA156R	160
SA156T	160
SA156X	160
SA156Y	160
SA157A	160
SA157B	160
SA157C	160
SA157D	160
SA157E	160
SA157F	160
SA157G	160
SA157L	160
SA157M	160
SA157R	160
SA157T	160
SA157X	160
SA157Y	160
SA159A	160
SA159B	160
SA159C	160
SA159D	160
SA159E	160
SA159F	160
SA159G	160
SA159L	160
SA159M	160
SA159R	160
SA159T	160
SA159X	160
SA159Y	160
SA160	100
SA160A	100
SA160B	100
SA160C	100
SA160D	100
SA160E	100
SA160F	100
SA160G	100
SA160L	100
SA160M	100
SA160R	100
SA160T	100
SA160X	100
SA160Y	100
SA161A	160
SA161B	160
SA161C	160
SA161D	160
SA161E	160
SA161F	160
SA161G	160
SA161L	160
SA161M	160
SA161R	160
SA161T	160
SA161X	160
SA161Y	160
SA162A	160
SA162B	160
SA162C	160
SA162D	160
SA162E	160
SA162F	160
SA162G	160
SA162L	160
SA162M	160
SA162R	160
SA162T	160
SA162X	160
SA162Y	160
SA163A	160
SA163B	160
SA163C	160
SA163D	160
SA163E	160
SA163F	160
SA163G	160
SA163L	160
SA163M	160
SA163R	160
SA163T	160
SA163X	160
SA163Y	160
SA164A	160
SA164B	160
SA164C	160
SA164D	160
SA164E	160
SA164F	160
SA164G	160
SA164L	160
SA164M	160
SA164R	160
SA164T	160
SA164X	160
SA164Y	160
SA165A	160
SA165B	160
SA165C	160
SA165D	160
SA165E	160
SA165F	160
SA165G	160
SA165L	160
SA165M	160
SA165R	160
SA165T	160
SA165X	160
SA165Y	160
SA166A	160
SA166B	160
SA166C	160
SA166D	160
SA166E	160
SA166F	160
SA166G	160
SA166L	160
SA166M	160
SA166R	160
SA166T	160
SA166X	160
SA166Y	160
SA167A	100
SA167B	100
SA167C	100
SA167D	100
SA167E	100
SA167F	100
SA167G	100
SA167L	100
SA167M	100
SA167R	100
SA167T	100
SA167X	100
SA167Y	100
SA168A	100
SA168B	100
SA168C	100
SA168D	100
SA168E	100
SA168F	100
SA168G	100
SA168L	100
SA168M	100
SA168R	100
SA168T	100
SA168X	100
SA168Y	100
SA169A	100
SA169B	100
SA169C	100
SA169D	100
SA169E	100
SA169F	100
SA169G	100
SA169L	100
SA169M	100
SA169R	100
SA169T	100
SA169X	100
SA169Y	100
SA170A	100
SA170B	100
SA170C	100
SA170D	100
SA170E	100
SA170F	100
SA170G	100
SA170L	100
SA170M	100
SA170R	100
SA170T	100
SA170X	100
SA170Y	100
SA171A	100
SA171B	100
SA171C	100
SA171D	100
SA171E	100
SA171F	100
SA171G	100
SA171L	100
SA171M	100
SA171R	100
SA171T	100
SA171X	100
SA171Y	100
SA172A	100
SA172B	100
SA172C	100
SA172D	100
SA172E	100
SA172F	100
SA172G	100
SA172L	100
SA172M	100
SA172R	100
SA172T	100
SA172X	100
SA172Y	100
SA173A	100
SA173B	100
SA173C	100
SA173D	100
SA173E	100
SA173F	100
SA173G	100
SA173L	100
SA173M	100
SA173R	100
SA173T	100
SA173X	100
SA173Y	100
SA174A	100
SA174B	100
SA174C	100
SA174D	100
SA174E	100
SA174F	100
SA174G	100
SA174L	100
SA174M	100
SA174R	100
SA174T	100
SA174X	100
SA174Y	100
SA175A	160
SA175B	160
SA175C	160
SA175D	160
SA175E	160
SA175F	160
SA175G	160
SA175L	160
SA175M	160
SA175R	160
SA175T	160
SA175X	160
SA175Y	160
SA176A	126
SA176B	126
SA176C	126
SA176D	126
SA176E	126
SA176F	126
SA176G	126
SA176L	126
SA176M	126
SA176R	126
SA176T	126
SA176X	126
SA176Y	126
SA180A	100
SA180B	100
SA180C	100
SA180D	100
SA180E	100
SA180F	100
SA180G	100
SA180L	100
SA180M	100
SA180R	100
SA180T	100
SA180X	100
SA180Y	100
SA181A	100
SA181B	100
SA181C	100
SA181D	100
SA181E	100
SA181F	100
SA181G	100
SA181L	100
SA181M	100
SA181R	100
SA181T	100
SA181X	100
SA181Y	100
SA182A	100
SA182B	100
SA182C	100
SA182D	100
SA182E	100
SA182F	100
SA182G	100
SA182L	100
SA182M	100
SA182R	100
SA182T	100
SA182X	100
SA182Y	100
SA183A	100
SA183B	100
SA183C	100
SA183D	100
SA183E	100
SA183F	100
SA183G	100
SA183L	100
SA183M	100
SA183R	100
SA183T	100
SA183X	100
SA183Y	100
SA188A	100
SA188B	100
SA188C	100
SA188D	100
SA188E	100
SA188F	100
SA188G	100
SA188L	100
SA188M	100
SA188R	100
SA188T	100
SA188X	100
SA188Y	100
SA189A	100
SA189B	100
SA189C	100
SA189D	100
SA189E	100
SA189F	100
SA189G	100
SA189L	100
SA189M	100
SA189R	100
SA189T	100
SA189X	100
SA189Y	100
SA197	102A
SA197-1	102A
SA197-2	102A
SA197-3	102A
SA198A	100
SA198B	100
SA198C	100
SA198D	100
SA198E	100
SA198F	100
SA198G	100
SA198L	100
SA198M	100
SA198R	100
SA198T	100
SA198X	100
SA198Y	100
SA201A	100
SA201B	100
SA201C	100
SA201D	100
SA201E	100
SA201F	100
SA201G	100
SA201L	100
SA201M	100
SA201R	100
SA201T	100
SA201X	100
SA201Y	100
SA202A	126
SA202B	126
SA202C	126
SA202D	126
SA202E	126
SA202F	126
SA202G	126
SA202L	126
SA202M	126
SA202R	126
SA202T	126
SA202X	126
SA202Y	126
SA203A	100
SA203B	100
SA203C	100
SA203D	100
SA203E	100
SA203F	100
SA203G	100
SA203L	100
SA203M	100
SA203R	100
SA203T	100
SA203X	100
SA203Y	100
SA204	102A
SA205BLU	102A
SA205BRN	102A
SA205GRN	102A
SA205ORN	102A
SA205RED	102A
SA205VIO	102A
SA205WHT	102A
SA205YEL	102A
SA206A	100
SA206B	100
SA206C	100
SA206D	100
SA206E	100
SA206F	100
SA206G	100
SA206L	100
SA206M	100
SA206R	100
SA206T	100
SA206X	100
SA206Y	100
SA207A	100
SA207B	100
SA207C	100
SA207D	100
SA207E	100
SA207F	100
SA207G	100
SA207L	100
SA207M	100
SA207R	100
SA207T	100
SA207X	100
SA207Y	100
SA208A	100
SA208B	100
SA208C	100
SA208D	100
SA208E	100
SA208F	100
SA208G	100
SA208L	100
SA208M	100
SA208R	100
SA208T	100
SA208X	100
SA208Y	100
SA209A	100
SA209B	100
SA209C	100
SA209D	100
SA209E	100
SA209F	100
SA209G	100
SA209L	100
SA209M	100
SA209R	100
SA209T	100
SA209X	100
SA209Y	100
SA210A	100
SA210B	100
SA210C	100
SA210D	100
SA210E	100
SA210F	100
SA210G	100
SA210L	100
SA210M	100
SA210R	100
SA210T	100
SA210X	100
SA210Y	100
SA211A	100
SA211B	100
SA211C	100
SA211D	100
SA211E	100
SA211F	100
SA211G	100
SA211L	100
SA211M	100
SA211R	100
SA211T	100
SA211X	100
SA211Y	100
SA212A	100
SA212B	100
SA212C	100
SA212D	100
SA212E	100
SA212F	100
SA212G	100
SA212L	100
SA212M	100
SA212R	100
SA212T	100
SA212X	100
SA212Y	100
SA213A	160
SA213B	160
SA213C	160
SA213D	160
SA213E	160
SA213F	160
SA213G	160
SA213L	160
SA213M	160
SA213R	160
SA213T	160
SA213X	160
SA213Y	160
SA214A	160
SA214B	160
SA214C	160
SA214D	160
SA214E	160
SA214F	160
SA214G	160
SA214L	160
SA214M	160
SA214R	160
SA214T	160
SA214X	160
SA214Y	160
SA215A	160
SA215B	160
SA215C	160
SA215D	160
SA215E	160
SA215F	160
SA215G	160
SA215L	160
SA215M	160
SA215R	160
SA215T	160
SA215X	160
SA215Y	160
SA216A	160
SA216B	160
SA216C	160
SA216D	160
SA216E	160
SA216F	160
SA216G	160
SA216L	160
SA216M	160
SA216R	160
SA216T	160
SA216X	160
SA216Y	160
SA217A	160
SA217B	160
SA217C	160
SA217D	160
SA217E	160
SA217F	160
SA217G	160
SA217L	160
SA217M	160
SA217R	160
SA217T	160
SA217X	160
SA217Y	160
SA218A	126
SA218B	126
SA218C	126
SA218D	126
SA218E	126
SA218F	126
SA218G	126
SA218L	126
SA218M	126
SA218R	126
SA218T	126
SA218X	126
SA218Y	126
SA219A	160
SA219B	160
SA219C	160
SA219D	160
SA219E	160
SA219F	160
SA219G	160
SA219L	160
SA219M	160
SA219R	160
SA219T	160
SA219X	160
SA219Y	160
SA220A	126
SA220B	126
SA220C	126
SA220D	126
SA220E	126
SA220F	126
SA220G	126
SA220L	126
SA220M	126
SA220R	126
SA220T	126
SA220X	126
SA220Y	126
SA221A	126
SA221B	126
SA221C	126
SA221D	126
SA221E	126
SA221F	126

PART NUMBER	NTE REPLACEMENT
SA221G	126
SA221L	126
SA221M	126
SA221R	126
SA221T	126
SA221X	126
SA221Y	126
SA222A	126
SA222B	126
SA222C	126
SA222D	126
SA222E	126
SA222F	126
SA222G	126
SA222L	126
SA222M	126
SA222R	126
SA222T	126
SA222X	126
SA222Y	126
SA223A	160
SA223B	160
SA223C	160
SA223D	160
SA223E	160
SA223F	160
SA223G	160
SA223L	160
SA223M	160
SA223R	160
SA223T	160
SA223X	160
SA223Y	160
SA224A	126
SA224B	126
SA224C	126
SA224D	126
SA224E	126
SA224F	126
SA224G	126
SA224L	126
SA224M	126
SA224R	126
SA224T	126
SA224X	126
SA224Y	126
SA225A	160
SA225B	160
SA225C	160
SA225D	160
SA225E	160
SA225F	160
SA225G	160
SA225L	160
SA225M	160
SA225R	160
SA225T	160
SA225X	160
SA225Y	160
SA227A	160
SA227B	160
SA227C	160
SA227D	160
SA227E	160
SA227F	160
SA227G	160
SA227L	160
SA227M	160
SA227R	160
SA227T	160
SA227X	160
SA227Y	160
SA229A	160
SA229B	160
SA229C	160
SA229D	160
SA229E	160
SA229F	160
SA229G	160
SA229L	160
SA229M	160
SA229R	160
SA229T	160
SA229X	160
SA229Y	160
SA230A	160
SA230B	160
SA230C	160
SA230D	160
SA230E	160
SA230F	160
SA230G	160
SA230L	160
SA230M	160
SA230R	160
SA230T	160
SA230X	160
SA230Y	160
SA231A	176
SA231B	176
SA231C	176
SA231D	176
SA231E	176
SA231F	176
SA231G	176
SA231L	176
SA231M	176
SA231R	176
SA231T	176
SA231X	176
SA231Y	176
SA233A	160
SA233B	160
SA233C	160
SA233D	160
SA233E	160
SA233F	160
SA233G	160
SA233L	160
SA233M	160
SA233R	160
SA233T	160
SA233X	160
SA233Y	160
SA234A	126
SA234B	126
SA234C	126
SA234D	126
SA234E	126
SA234F	126
SA234G	126
SA234L	126
SA234M	126
SA234R	126
SA234T	126
SA234X	126
SA234Y	126
SA235A	160
SA235B	160
SA235C	160
SA235D	160
SA235E	160
SA235F	160
SA235G	160
SA235L	160
SA235M	160
SA235R	160
SA235T	160
SA235X	160
SA235Y	160
SA236A	160
SA236B	160
SA236C	160
SA236D	160
SA236E	160
SA236F	160
SA236G	160
SA236L	160
SA236M	160
SA236R	160
SA236T	160
SA236X	160
SA236Y	160
SA237A	126
SA237B	126
SA237C	126
SA237D	126
SA237E	126
SA237F	126
SA237G	126
SA237L	126
SA237M	126
SA237R	126
SA237T	126
SA237X	126
SA237Y	126
SA238A	160
SA238B	160
SA238C	160
SA238D	160
SA238E	160
SA238F	160
SA238G	160
SA238L	160
SA238M	160
SA238R	160
SA238T	160
SA238X	160
SA238Y	160
SA239A	160
SA239B	160
SA239C	160
SA239D	160
SA239E	160
SA239F	160
SA239G	160
SA239L	160
SA239M	160
SA239R	160
SA239T	160
SA239X	160
SA239Y	160
SA240	102A
SA241A	160
SA241B	160
SA241C	160
SA241D	160
SA241E	160
SA241F	160
SA241G	160
SA241L	160
SA241M	160
SA241R	160
SA241T	160
SA241X	160
SA241Y	160
SA246A	160
SA246B	160
SA246C	160
SA246D	160
SA246E	160
SA246F	160
SA246G	160
SA246L	160
SA246M	160
SA246R	160
SA246T	160
SA246X	160
SA246Y	160
SA247A	160
SA247B	160
SA247C	160
SA247D	160
SA247E	160
SA247F	160
SA247G	160
SA247L	160
SA247M	160
SA247R	160
SA247T	160
SA247X	160
SA247Y	160
SA248A	100
SA248B	100
SA248C	100
SA248D	100
SA248E	100
SA248F	100
SA248G	100
SA248L	100
SA248M	100
SA248R	100
SA248T	100
SA248X	100
SA248Y	100
SA249A	126
SA249B	126
SA249C	126
SA249D	126
SA249E	126
SA249F	126
SA249G	126
SA249L	126
SA249M	126
SA249R	126
SA249T	126
SA249X	126
SA249Y	126
SA250A	126
SA250B	126
SA250C	126
SA250D	126
SA250E	126
SA250F	126
SA250G	126
SA250L	126
SA250M	126
SA250R	126
SA250T	126
SA250X	126
SA250Y	126
SA251A	160
SA251B	160
SA251C	160
SA251D	160
SA251E	160
SA251F	160
SA251G	160
SA251L	160
SA251M	160
SA251R	160
SA251T	160
SA251X	160
SA251Y	160
SA252A	160
SA252B	160
SA252C	160
SA252D	160
SA252E	160
SA252F	160
SA252G	160
SA252L	160
SA252M	160
SA252R	160
SA252T	160
SA252X	160
SA252Y	160
SA253A	160
SA253B	160
SA253C	160
SA253D	160
SA253E	160
SA253F	160
SA253G	160
SA253L	160
SA253M	160
SA253R	160
SA253T	160
SA253X	160
SA253Y	160
SA254A	100
SA254B	100
SA254C	100
SA254D	100
SA254E	100
SA254F	100
SA254G	100
SA254L	100
SA254M	100
SA254R	100
SA254T	100
SA254X	100
SA254Y	100
SA255A	100
SA255B	100
SA255C	100
SA255D	100
SA255E	100
SA255F	100
SA255G	100
SA255L	100
SA255M	100
SA255R	100
SA255T	100
SA255X	100
SA255Y	100
SA256A	126
SA256B	126
SA256C	126
SA256D	126
SA256E	126
SA256F	126
SA256G	126
SA256L	126
SA256M	126
SA256R	126
SA256T	126
SA256X	126
SA256Y	126
SA257A	160
SA257B	160
SA257C	160
SA257D	160
SA257E	160
SA257F	160
SA257G	160
SA257L	160
SA257M	160
SA257R	160
SA257T	160
SA257X	160
SA257Y	160
SA258A	160
SA258B	160
SA258C	160
SA258D	160
SA258E	160
SA258F	160
SA258G	160
SA258L	160
SA258M	160
SA258R	160
SA258T	160
SA258X	160
SA258Y	160
SA259A	126
SA259B	126
SA259C	126
SA259D	126
SA259E	126
SA259F	126
SA259G	126
SA259L	126
SA259M	126
SA259R	126
SA259T	126
SA259X	126
SA259Y	126
SA260A	160
SA260B	160
SA260C	160
SA260D	160
SA260E	160
SA260F	160
SA260G	160
SA260L	160
SA260M	160
SA260R	160
SA260T	160
SA260X	160
SA260Y	160
SA261A	160
SA261B	160
SA261C	160
SA261D	160
SA261E	160
SA261F	160
SA261G	160
SA261L	160
SA261M	160
SA261R	160
SA261T	160
SA261X	160
SA261Y	160
SA262A	160
SA262B	160
SA262C	160
SA262D	160
SA262E	160
SA262F	160
SA262G	160
SA262L	160
SA262M	160
SA262R	160
SA262T	160
SA262X	160
SA262Y	160
SA263A	160
SA263B	160
SA263C	160
SA263D	160
SA263E	160
SA263F	160
SA263G	160
SA263L	160
SA263M	160
SA263R	160
SA263T	160
SA263X	160
SA263Y	160
SA264A	160
SA264B	160
SA264C	160
SA264D	160
SA264E	160
SA264F	160
SA264G	160
SA264L	160
SA264M	160
SA264R	160
SA264T	160
SA264X	160
SA264Y	160
SA265A	160
SA265B	160
SA265C	160
SA265D	160
SA265E	160
SA265F	160
SA265G	160
SA265L	160
SA265M	160
SA265R	160
SA265T	160
SA265X	160
SA265Y	160
SA266A	126
SA266B	126
SA266C	126
SA266D	126
SA266E	126
SA266F	126
SA266G	126
SA266L	126
SA266M	126
SA266R	126
SA266T	126
SA266X	126
SA266Y	126
SA267A	160
SA267B	160
SA267C	160
SA267D	160
SA267E	160
SA267F	160
SA267G	160
SA267L	160
SA267M	160
SA267R	160
SA267T	160
SA267X	160
SA267Y	160
SA268A	160
SA268B	160
SA268C	160
SA268D	160
SA268E	160
SA268F	160
SA268G	160
SA268L	160
SA268M	160
SA268R	160
SA268T	160
SA268X	160
SA268Y	160
SA269A	126
SA269B	126
SA269C	126
SA269D	126
SA269E	126
SA269F	126
SA269G	126
SA269L	126
SA269M	126
SA269R	126
SA269T	126
SA269X	126
SA269Y	126
SA270A	160
SA270B	160
SA270C	160
SA270D	160
SA270E	160
SA270F	160
SA270G	160
SA270L	160
SA270M	160
SA270R	160
SA270T	160
SA270X	160
SA270Y	160
SA271A	126
SA271B	126
SA271C	126
SA271D	126
SA271E	126
SA271F	126
SA271G	126
SA271L	126
SA271M	126
SA271R	126
SA271T	126
SA271X	126
SA271Y	126
SA272A	126
SA272B	126
SA272C	126
SA272D	126
SA272E	126
SA272F	126
SA272G	126
SA272L	126
SA272M	126
SA272R	126
SA272T	126
SA272X	126
SA272Y	126
SA273A	126
SA273B	126
SA273C	126
SA273D	126
SA273E	126
SA273F	126
SA273G	126
SA273L	126
SA273M	126
SA273R	126
SA273T	126
SA273X	126
SA273Y	126
SA274A	126
SA274B	126
SA274C	126
SA274D	126
SA274E	126
SA274F	126
SA274G	126
SA274L	126
SA274M	126
SA274R	126
SA274T	126
SA274X	126
SA274Y	126
SA275A	126
SA275B	126
SA275C	126
SA275D	126
SA275E	126
SA275F	126
SA275G	126
SA275L	126
SA275M	126
SA275R	126
SA275T	126
SA275X	126
SA275Y	126
SA277A	100
SA277B	100
SA277C	100
SA277D	100
SA277E	100
SA277F	100
SA277G	100
SA277L	100
SA277M	100
SA277R	100
SA277T	100
SA277X	100
SA277Y	100
SA278A	100
SA278B	100
SA278C	100
SA278D	100
SA278E	100
SA278F	100
SA278G	100
SA278L	100
SA278M	100
SA278R	100
SA278T	100
SA278X	100
SA278Y	100
SA279A	100
SA279B	100
SA279C	100
SA279D	100
SA279E	100
SA279F	100
SA279G	100
SA279L	100
SA279M	100
SA279R	100
SA279T	100
SA279X	100
SA279Y	100
SA280A	160
SA280B	160
SA280C	160
SA280D	160
SA280E	160
SA280F	160
SA280G	160
SA280L	160
SA280M	160
SA280R	160
SA280T	160
SA280X	160
SA280Y	160
SA281A	160
SA281B	160
SA281C	160
SA281D	160
SA281E	160
SA281F	160
SA281G	160
SA281L	160
SA281M	160
SA281R	160
SA281T	160
SA281X	160
SA281Y	160
SA282A	100
SA282B	100
SA282C	100
SA282D	100
SA282E	100
SA282F	100
SA282G	100
SA282L	100
SA282M	100
SA282R	100
SA282T	100
SA282X	100
SA282Y	100
SA283A	100
SA283B	100
SA283C	100
SA283D	100
SA283E	100
SA283F	100
SA283G	100
SA283L	100
SA283M	100
SA283R	100
SA283T	100
SA283X	100
SA283Y	100
SA284A	100
SA284B	100
SA284C	100
SA284D	100
SA284E	100
SA284F	100
SA284G	100
SA284L	100
SA284M	100
SA284R	100
SA284T	100
SA284X	100
SA284Y	100
SA285A	126
SA285B	126
SA285C	126
SA285D	126
SA285E	126
SA285F	126
SA285G	126
SA285L	126
SA285M	126
SA285R	126
SA285T	126
SA285X	126
SA285Y	126
SA286A	126
SA286B	126
SA286C	126
SA286D	126
SA286E	126
SA286F	126
SA286G	126
SA286L	126
SA286M	126
SA286R	126
SA286T	126
SA286X	126
SA286Y	126
SA287A	126
SA287B	126
SA287C	126
SA287D	126
SA287E	126
SA287F	126
SA287G	126
SA287L	126
SA287M	126
SA287R	126
SA287T	126
SA287X	126
SA287Y	126
SA288A	126
SA288B	126
SA288C	126
SA288D	126
SA288E	126
SA288F	126
SA288G	126
SA288L	126
SA288M	126
SA288R	126
SA288T	126
SA288X	126
SA288Y	126
SA289A	160
SA289B	160
SA289C	160
SA289D	160
SA289E	160
SA289F	160
SA289G	160
SA289L	160
SA289M	160
SA289R	160
SA289T	160
SA289X	160
SA289Y	160
SA290A	160
SA290B	160
SA290C	160
SA290D	160
SA290E	160
SA290F	160
SA290G	160
SA290L	160
SA290M	160
SA290R	160
SA290T	160
SA290X	160
SA290Y	160
SA291A	160
SA291B	160
SA291C	160
SA291D	160
SA291E	160
SA291F	160
SA291G	160
SA291L	160
SA291M	160
SA291R	160

PART NUMBER	NTE REPLACEMENT
SA291T	160
SA291X	160
SA291Y	160
SA292A	160
SA292B	160
SA292C	160
SA292D	160
SA292E	160
SA292F	160
SA292G	160
SA292L	160
SA292M	160
SA292R	160
SA292T	160
SA292X	160
SA292Y	160
SA293A	160
SA293B	160
SA293C	160
SA293D	160
SA293E	160
SA293F	160
SA293G	160
SA293L	160
SA293M	160
SA293R	160
SA293T	160
SA293X	160
SA293Y	160
SA294A	160
SA294B	160
SA294C	160
SA294D	160
SA294E	160
SA294F	160
SA294G	160
SA294L	160
SA294M	160
SA294R	160
SA294T	160
SA294X	160
SA294Y	160
SA295A	160
SA295B	160
SA295C	160
SA295D	160
SA295E	160
SA295F	160
SA295G	160
SA295L	160
SA295M	160
SA295R	160
SA295T	160
SA295X	160
SA295Y	160
SA296A	100
SA296B	100
SA296C	100
SA296D	100
SA296E	100
SA296F	100
SA296G	100
SA296L	100
SA296M	100
SA296R	100
SA296T	100
SA296X	100
SA296Y	100
SA297A	100
SA297B	100
SA297C	100
SA297E	100
SA297F	100
SA297G	100
SA297L	100
SA297M	100
SA297R	100
SA297T	100
SA297X	100
SA297Y	100
SA298A	126
SA298B	126
SA298C	126
SA298D	126
SA298E	126
SA298L	126
SA298M	126
SA298R	126
SA298T	126
SA298X	126
SA298Y	126
SA301A	160
SA301B	160
SA301C	160
SA301D	160
SA301E	160
SA301F	160
SA301G	160
SA301L	160
SA301M	160
SA301R	160
SA301T	160
SA301X	160
SA301Y	160
SA304A	176
SA304B	176
SA304C	176
SA304D	176
SA304E	176
SA304F	176
SA304G	176
SA304L	176
SA304M	176
SA304R	176
SA304T	176
SA304X	176
SA304Y	176
SA305A	100
SA305B	100
SA305C	100
SA305D	100
SA305E	100
SA305F	100
SA305G	100
SA305L	100
SA305M	100
SA305R	100
SA305T	100
SA305X	100
SA305Y	100
SA307A	126
SA307B	126
SA307C	126
SA307D	126
SA307E	126
SA307F	126
SA307G	126
SA307L	126
SA307M	126
SA307R	126
SA307T	126
SA307X	126
SA307Y	126
SA308A	160
SA308B	160
SA308C	160
SA308D	160
SA308E	160
SA308F	160
SA308G	160
SA308R	160
SA308T	160
SA308X	160
SA308Y	160
SA309A	160
SA309B	160
SA309C	160
SA309D	160
SA309E	160
SA309F	160
SA309G	160
SA309L	160
SA309M	160
SA309R	160
SA309T	160
SA309X	160
SA309Y	160
SA310	159
SA310A	159
SA311	159
SA311A	159
SA312	159
SA312A	159
SA313	159
SA313A	159
SA314	159
SA314A	159
SA315	159
SA315A	159
SA316	159
SA316A	159
SA318-2	158
SA318-3	158
SA321A	160
SA321B	160
SA321C	160
SA321D	160
SA321E	160
SA321F	160
SA321G	160
SA321L	160
SA321M	160
SA321R	160
SA321T	160
SA321X	160
SA321Y	160
SA322A	126
SA322B	126
SA322C	126
SA322D	126
SA322E	126
SA322F	126
SA322G	126
SA322L	126
SA322M	126
SA322R	126
SA322T	126
SA322X	126
SA322Y	126
SA323A	126
SA323B	126
SA323C	126
SA323D	126
SA323E	126
SA323F	126
SA323G	126
SA323L	126
SA323M	126
SA323R	126
SA323T	126
SA323X	126
SA323Y	126
SA324A	160
SA324B	160
SA324C	160
SA324D	160
SA324E	160
SA324F	160
SA324G	160
SA324L	160
SA324M	160
SA324R	160
SA324T	160
SA324X	160
SA324Y	160
SA325A	160
SA325B	160
SA325C	160
SA325D	160
SA325E	160
SA325F	160
SA325G	160
SA325L	160
SA325M	160
SA325R	160
SA325T	160
SA325X	160
SA325Y	160
SA326A	160
SA326B	160
SA326C	160
SA326D	160
SA326E	160
SA326F	160
SA326G	160
SA326L	160
SA326M	160
SA326R	160
SA326T	160
SA326X	160
SA326Y	160
SA329A	160
SA329B	160
SA329C	160
SA329D	160
SA329E	160
SA329F	160
SA329G	160
SA329L	160
SA329M	160
SA329R	160
SA329T	160
SA329X	160
SA329Y	160
SA330A	100
SA330B	100
SA330C	100
SA330D	100
SA330E	100
SA330F	100
SA330G	100
SA330L	100
SA330M	100
SA330R	100
SA330T	100
SA330X	100
SA330Y	100
SA331A	160
SA331B	160
SA331C	160
SA331D	160
SA331E	160
SA331F	160
SA331G	160
SA331L	160
SA331M	160
SA331R	160
SA331T	160
SA331X	160
SA331Y	160
SA332A	126
SA332B	126
SA332C	126
SA332D	126
SA332E	126
SA332F	126
SA332G	126
SA332L	126
SA332M	126
SA332R	126
SA332T	126
SA332X	126
SA332Y	126
SA334A	160
SA334B	160
SA334C	160
SA334D	160
SA334E	160
SA334F	160
SA334G	160
SA334L	160
SA334M	160
SA334R	160
SA334T	160
SA334X	160
SA334Y	160
SA335A	160
SA335B	160
SA335C	160
SA335D	160
SA335E	160
SA335F	160
SA335G	160
SA335L	160
SA335M	160
SA335R	160
SA335T	160
SA335X	160
SA335Y	160
SA337A	160
SA337B	160
SA337C	160
SA337D	160
SA337E	160
SA337F	160
SA337G	160
SA337L	160
SA337M	160
SA337R	160
SA337T	160
SA337X	160
SA337Y	160
SA338A	126
SA338B	126
SA338C	126
SA338D	126
SA338E	126
SA338F	126
SA338G	126
SA338L	126
SA338M	126
SA338R	126
SA338T	126
SA338X	126
SA338Y	126
SA339A	126
SA339B	126
SA339C	126
SA339D	126
SA339E	126
SA339F	126
SA339G	126
SA339L	126
SA339M	126
SA339R	126
SA339T	126
SA339X	126
SA339Y	126
SA341A	126
SA341B	126
SA341C	126
SA341D	126
SA341E	126
SA341F	126
SA341G	126
SA341L	126
SA341M	126
SA341R	126
SA341T	126
SA341X	126
SA341Y	126
SA342A	126
SA342B	126
SA342C	126
SA342D	126
SA342E	126
SA342F	126
SA342G	126
SA342L	126
SA342M	126
SA342R	126
SA342T	126
SA342X	126
SA342Y	126
SA343A	160
SA343B	160
SA343C	160
SA343D	160
SA343E	160
SA343F	160
SA343G	160
SA343L	160
SA343M	160
SA343R	160
SA343T	160
SA343X	160
SA343Y	160
SA344A	160
SA344B	160
SA344C	160
SA344D	160
SA344E	160
SA344F	160
SA344G	160
SA344L	160
SA344M	160
SA344R	160
SA344T	160
SA344X	160
SA344Y	160
SA348A	160
SA348B	160
SA348C	160
SA348D	160
SA348E	160
SA348F	160
SA348G	160
SA348L	160
SA348M	160
SA348R	160
SA348T	160
SA348X	160
SA348Y	160
SA350A	160
SA350B	160
SA350C	160
SA350D	160
SA350E	160
SA350F	160
SA350G	160
SA350L	160
SA350M	160
SA350R	160
SA350T	160
SA350X	160
SA350Y	160
SA351A	160
SA351B	160
SA351C	160
SA351D	160
SA351E	160
SA351F	160
SA351G	160
SA351L	160
SA351M	160
SA351R	160
SA351T	160
SA351X	160
SA351Y	160
SA352A	160
SA352B	160
SA352C	160
SA352D	160
SA352E	160
SA352F	160
SA352G	160
SA352L	160
SA352M	160
SA352R	160
SA352T	160
SA352X	160
SA352Y	160
SA353A	160
SA353B	160
SA353C	160
SA353D	160
SA353E	160
SA353F	160
SA353G	160
SA353L	160
SA353M	160
SA353R	160
SA353T	160
SA353X	160
SA353Y	160
SA354B	103
SA355A	160
SA355B	160
SA355C	160
SA355D	160
SA355E	160
SA355F	160
SA355G	160
SA355L	160
SA355M	160
SA355R	160
SA355T	160
SA355X	160
SA355Y	160
SA356A	126
SA356B	126
SA356C	126
SA356D	126
SA356E	126
SA356F	126
SA356G	126
SA356L	126
SA356M	126
SA356R	126
SA356T	126
SA356X	126
SA356Y	126
SA357A	126
SA357B	126
SA357C	126
SA357D	126
SA357E	126
SA357F	126
SA357G	126
SA357L	126
SA357M	126
SA357R	126
SA357T	126
SA357X	126
SA357Y	126
SA358A	160
SA358B	160
SA358C	160
SA358D	160
SA358E	160
SA358F	160
SA358G	160
SA358L	160
SA358M	160
SA358R	160
SA358T	160
SA358X	160
SA358Y	160
SA359A	160
SA359B	160
SA359C	160
SA359D	160
SA359E	160
SA359F	160
SA359G	160
SA359L	160
SA359M	160
SA359R	160
SA359T	160
SA359X	160
SA359Y	160
SA360A	160
SA360B	160
SA360C	160
SA360D	160
SA360E	160
SA360F	160
SA360G	160
SA360L	160
SA360M	160
SA360R	160
SA360T	160
SA360X	160
SA360Y	160
SA361A	160
SA361B	160
SA361C	160
SA361D	160
SA361E	160
SA361F	160
SA361G	160
SA361L	160
SA361M	160
SA361R	160
SA361T	160
SA361X	160
SA361Y	160
SA364A	160
SA364B	160
SA364C	160
SA364D	160
SA364E	160
SA364F	160
SA364G	160
SA364L	160
SA364M	160
SA364R	160
SA364T	160
SA364X	160
SA364Y	160
SA365A	160
SA365B	160
SA365C	160
SA365D	160
SA365E	160
SA365F	160
SA365G	160
SA365L	160
SA365M	160
SA365R	160
SA365T	160
SA365X	160
SA365Y	160
SA366A	160
SA366B	160
SA366C	160
SA366D	160
SA366E	160
SA366F	160
SA366G	160
SA366L	160
SA366M	160
SA366R	160
SA366T	160
SA366X	160
SA366Y	160
SA367A	160
SA367B	160
SA367C	160
SA367D	160
SA367E	160
SA367F	160
SA367G	160
SA367L	160
SA367M	160
SA367R	160
SA367T	160
SA367X	160
SA367Y	160
SA368A	160
SA368B	160
SA368C	160
SA368D	160
SA368E	160
SA368F	160
SA368G	160
SA368L	160
SA368M	160
SA368R	160
SA368T	160
SA368X	160
SA368Y	160
SA369A	126
SA369B	126
SA369C	126
SA369D	126
SA369E	126
SA369F	126
SA369G	126
SA369L	126
SA369M	126
SA369R	126
SA369T	126
SA369X	126
SA369Y	126
SA375A	176
SA375B	176
SA375C	176
SA375D	176
SA375E	176
SA375F	176
SA375G	176
SA375L	176
SA375M	176
SA375R	176
SA375T	176
SA375X	176
SA375Y	176
SA376A	160
SA376B	160
SA376C	160
SA376D	160
SA376E	160
SA376F	160
SA376G	160
SA376L	160
SA376M	160
SA376R	160
SA376T	160
SA376X	160
SA376Y	160
SA377A	160
SA377B	160
SA377C	160
SA377D	160
SA377E	160
SA377F	160
SA377G	160
SA377L	160
SA377M	160
SA377R	160
SA377T	160
SA377X	160
SA377Y	160
SA378A	160
SA378B	160
SA378C	160
SA378D	160
SA378E	160
SA378F	160
SA378G	160
SA378L	160
SA378M	160
SA378R	160
SA378T	160
SA378X	160
SA378Y	160
SA379A	160
SA379B	160
SA379C	160
SA379D	160
SA379E	160
SA379F	160
SA379G	160
SA379L	160
SA379M	160
SA379R	160
SA379T	160
SA379X	160
SA379Y	160
SA380A	160
SA380B	160
SA380C	160
SA380D	160
SA380E	160
SA380F	160
SA380G	160
SA380L	160
SA380M	160
SA380R	160
SA380T	160
SA380X	160
SA380Y	160
SA381A	126
SA381B	126
SA381C	126
SA381D	126
SA381E	126
SA381F	126
SA381G	126
SA381L	126
SA381M	126
SA381R	126
SA381T	126
SA381X	126
SA381Y	126
SA382A	126
SA382B	126
SA382C	126
SA382D	126
SA382E	126
SA382F	126
SA382G	126
SA382L	126
SA382M	126
SA382R	126
SA382T	126
SA382X	126
SA382Y	126
SA384A	126
SA384B	126
SA384C	126
SA384D	126
SA384E	126
SA384F	126
SA384G	126
SA384L	126
SA384M	126
SA384R	126
SA384T	126
SA384X	126
SA384Y	126
SA385A	160
SA385B	160
SA385C	160
SA385D	160
SA385E	160
SA385F	160
SA385G	160
SA385L	160
SA385M	160
SA385R	160
SA385T	160
SA385X	160
SA385Y	160
SA391A	160
SA391B	160
SA391C	160

PART NUMBER	NTE REPLACEMENT
SA391D	160
SA391E	160
SA391F	160
SA391G	160
SA391L	160
SA391M	160
SA391R	160
SA391T	160
SA391X	160
SA391Y	160
SA392A	160
SA392B	160
SA392C	160
SA392D	160
SA392E	160
SA392F	160
SA392G	160
SA392L	160
SA392M	160
SA392R	160
SA392T	160
SA392X	160
SA392Y	160
SA393A	160
SA393B	160
SA393C	160
SA393D	160
SA393E	160
SA393F	160
SA393G	160
SA393L	160
SA393M	160
SA393R	160
SA393T	160
SA393X	160
SA393Y	160
SA394A	160
SA394B	160
SA394C	160
SA394D	160
SA394E	160
SA394F	160
SA394G	160
SA394L	160
SA394M	160
SA394R	160
SA394T	160
SA394X	160
SA394Y	160
SA395A	160
SA395B	160
SA395C	160
SA395D	160
SA395E	160
SA395F	160
SA395G	160
SA395L	160
SA395M	160
SA395R	160
SA395T	160
SA395X	160
SA395Y	160
SA398A	160
SA398B	160
SA398C	160
SA398D	160
SA398E	160
SA398F	160
SA398G	160
SA398L	160
SA398M	160
SA398R	160
SA398T	160
SA398X	160
SA398Y	160
SA399A	160
SA399B	160
SA399C	160
SA399D	160
SA399E	160
SA399F	160
SA399G	160
SA399L	160
SA399M	160
SA399R	160
SA399T	160
SA399X	160
SA399Y	160
SA400A	126
SA400B	126
SA400C	126
SA400D	126
SA400E	126
SA400F	126
SA400G	126
SA400L	126
SA400M	126
SA400R	126
SA400T	126
SA400X	126
SA400Y	126
SA403A	160
SA403B	160
SA403C	160
SA403D	160
SA403E	160
SA403F	160
SA403G	160
SA403L	160
SA403M	160
SA403R	160
SA403T	160
SA403X	160
SA403Y	160
SA404A	160
SA404B	160
SA404C	160
SA404D	160
SA404E	160
SA404F	160
SA404G	160
SA404L	160
SA404M	160
SA404R	160
SA404T	160
SA404X	160
SA404Y	160
SA406A	100
SA406B	100
SA406C	100
SA406D	100
SA406E	100
SA406F	100
SA406G	100
SA406L	100
SA406M	100
SA406R	100
SA406T	100
SA406X	100
SA406Y	100
SA407A	100
SA407B	100
SA407C	100
SA407D	100
SA407E	100
SA407F	100
SA407G	100
SA407L	100
SA407M	100
SA407R	100
SA407T	100
SA407X	100
SA407Y	100
SA408A	176
SA408B	176
SA408C	176
SA408D	176
SA408E	176
SA408F	176
SA408G	176
SA408L	176
SA408M	176
SA408R	176
SA408T	176
SA408X	176
SA408Y	176
SA409A	176
SA409B	176
SA409C	176
SA409D	176
SA409E	176
SA409F	176
SA409G	176
SA409L	176
SA409M	176
SA409R	176
SA409T	176
SA409X	176
SA409Y	176
SA410	159
SA410A	159
SA411	159
SA411A	159
SA412	159
SA412A	159
SA413	159
SA413A	159
SA414	159
SA414A	159
SA415	159
SA415A	159
SA416	159
SA416A	159
SA420A	160
SA420B	160
SA420C	160
SA420D	160
SA420E	160
SA420F	160
SA420G	160
SA420L	160
SA420M	160
SA420R	160
SA420T	160
SA420X	160
SA420Y	160
SA426A	160
SA426B	160
SA426C	160
SA426D	160
SA426E	160
SA426F	160
SA426G	160
SA426L	160
SA426M	160
SA426R	160
SA426T	160
SA426X	160
SA426Y	160
SA427A	160
SA427B	160
SA427C	160
SA427D	160
SA427E	160
SA427F	160
SA427G	160
SA427L	160
SA427M	160
SA427R	160
SA427T	160
SA427X	160
SA427Y	160
SA428A	160
SA428B	160
SA428C	160
SA428D	160
SA428E	160
SA428F	160
SA428G	160
SA428L	160
SA428M	160
SA428R	160
SA428T	160
SA428X	160
SA428Y	160
SA429A	159
SA429B	159
SA429C	159
SA429D	159
SA429E	159
SA429F	159
SA429G	159
SA429L	159
SA429M	159
SA429R	159
SA429T	159
SA429X	159
SA429Y	159
SA432A	160
SA432B	160
SA432C	160
SA432D	160
SA432E	160
SA432F	160
SA432G	160
SA432L	160
SA432M	160
SA432R	160
SA432T	160
SA432X	160
SA432Y	160
SA433A	160
SA433B	160
SA433C	160
SA433D	160
SA433E	160
SA433F	160
SA433G	160
SA433L	160
SA433M	160
SA433R	160
SA433T	160
SA433X	160
SA433Y	160
SA434A	160
SA434B	160
SA434C	160
SA434D	160
SA434E	160
SA434F	160
SA434G	160
SA434L	160
SA434M	160
SA434R	160
SA434T	160
SA434X	160
SA434Y	160
SA435A	126
SA435B	126
SA435C	126
SA435D	126
SA435E	126
SA435F	126
SA435G	126
SA435L	126
SA435M	126
SA435R	126
SA435T	126
SA435X	126
SA435Y	126
SA436A	160
SA436B	160
SA436C	160
SA436D	160
SA436E	160
SA436F	160
SA436G	160
SA436L	160
SA436M	160
SA436R	160
SA436T	160
SA436X	160
SA436Y	160
SA437A	160
SA437B	160
SA437C	160
SA437D	160
SA437E	160
SA437F	160
SA437G	160
SA437L	160
SA437M	160
SA437R	160
SA437T	160
SA437X	160
SA437Y	160
SA438A	160
SA438B	160
SA438C	160
SA438D	160
SA438E	160
SA438F	160
SA438G	160
SA438L	160
SA438M	160
SA438R	160
SA438T	160
SA438X	160
SA438Y	160
SA440A	160
SA440B	160
SA440C	160
SA440D	160
SA440E	160
SA440F	160
SA440G	160
SA440L	160
SA440M	160
SA440R	160
SA440T	160
SA440X	160
SA440Y	160
SA446A	160
SA446B	160
SA446C	160
SA446D	160
SA446E	160
SA446F	160
SA446G	160
SA446L	160
SA446M	160
SA446R	160
SA446T	160
SA446X	160
SA446Y	160
SA447A	160
SA447B	160
SA447C	160
SA447D	160
SA447E	160
SA447F	160
SA447G	160
SA447L	160
SA447M	160
SA447R	160
SA447T	160
SA447X	160
SA447Y	160
SA453A	160
SA453B	160
SA453C	160
SA453D	160
SA453E	160
SA453F	160
SA453G	160
SA453L	160
SA453M	160
SA453R	160
SA453T	160
SA453X	160
SA453Y	160
SA454A	160
SA454B	160
SA454C	160
SA454D	160
SA454E	160
SA454F	160
SA454G	160
SA454L	160
SA454M	160
SA454R	160
SA454T	160
SA454X	160
SA454Y	160
SA455A	160
SA455B	160
SA455C	160
SA455D	160
SA455E	160
SA455F	160
SA455G	160
SA455L	160
SA455M	160
SA455R	160
SA455T	160
SA455X	160
SA455Y	160
SA456A	160
SA456B	160
SA456C	160
SA456D	160
SA456E	160
SA456F	160
SA456G	160
SA456L	160
SA456M	160
SA456R	160
SA456T	160
SA456X	160
SA456Y	160
SA457A	160
SA457B	160
SA457C	160
SA457D	160
SA457E	160
SA457F	160
SA457G	160
SA457L	160
SA457M	160
SA457R	160
SA457T	160
SA457X	160
SA457Y	160
SA465A	159
SA465B	159
SA465C	159
SA465D	159
SA465E	159
SA465F	159
SA465G	159
SA465L	159
SA465M	159
SA465R	159
SA465T	159
SA465X	159
SA465Y	159
SA466A	160
SA466B	160
SA466C	160
SA466D	160
SA466E	160
SA466F	160
SA466G	160
SA466L	160
SA466M	160
SA466R	160
SA466T	160
SA466X	160
SA466Y	160
SA467A	159
SA467B	159
SA467C	159
SA467D	159
SA467E	159
SA467F	159
SA467L	159
SA467M	159
SA467R	159
SA468A	160
SA468B	160
SA468C	160
SA468D	160
SA468E	160
SA468F	160
SA468G	160
SA468L	160
SA468M	160
SA468R	160
SA468T	160
SA468X	160
SA468Y	160
SA469A	160
SA469B	160
SA469C	160
SA469D	160
SA469E	160
SA469F	160
SA469G	160
SA469L	160
SA469M	160
SA469R	160
SA469T	160
SA469X	160
SA469Y	160
SA470A	160
SA470B	160
SA470C	160
SA470D	160
SA470E	160
SA470F	160
SA470G	160
SA470L	160
SA470M	160
SA470R	160
SA470T	160
SA470X	160
SA470Y	160
SA471A	160
SA471B	160
SA471C	160
SA471D	160
SA471E	160
SA471F	160
SA471G	160
SA471L	160
SA471M	160
SA471R	160
SA471T	160
SA471X	160
SA471Y	160
SA472A	160
SA472B	160
SA472C	160
SA472D	160
SA472E	160
SA472F	160
SA472G	160
SA472L	160
SA472M	160
SA472R	160
SA472T	160
SA472X	160
SA472Y	160
SA473A	197
SA473B	197
SA473C	197
SA473D	197
SA473E	197
SA473F	197
SA473G	197
SA473L	197
SA473M	197
SA473R	197
SA473T	197
SA473X	197
SA473Y	197
SA474A	160
SA474B	160
SA474C	160
SA474D	160
SA474E	160
SA474F	160
SA474G	160
SA474L	160
SA474M	160
SA474R	160
SA474T	160
SA474X	160
SA474Y	160
SA475A	160
SA475B	160
SA475C	160
SA475D	160
SA475E	160
SA475F	160
SA475G	160
SA475L	160
SA475M	160
SA475R	160
SA475T	160
SA475X	160
SA475Y	160
SA476A	126
SA476B	126
SA476C	126
SA476D	126
SA476E	126
SA476F	126
SA476G	126
SA476L	126
SA476M	126
SA476R	126
SA476T	126
SA476X	126
SA476Y	126
SA477A	160
SA477B	160
SA477C	160
SA477D	160
SA477E	160
SA477F	160
SA477G	160
SA477L	160
SA477M	160
SA477R	160
SA477T	160
SA477X	160
SA477Y	160
SA478A	160
SA478B	160
SA478C	160
SA478D	160
SA478E	160
SA478F	160
SA478G	160
SA478L	160
SA478M	160
SA478R	160
SA478T	160
SA478X	160
SA478Y	160
SA479A	160
SA479B	160
SA479C	160
SA479D	160
SA479E	160
SA479F	160
SA479G	160
SA479L	160
SA479M	160
SA479R	160
SA479T	160
SA479X	160
SA479Y	160
SA480A	159
SA480B	159
SA480C	159
SA480D	159
SA480E	159
SA480F	159
SA480G	159
SA480L	159
SA480M	159
SA480R	159
SA480T	159
SA480X	159
SA480Y	159
SA482A	159
SA482B	159
SA482C	159
SA482D	159
SA482E	159
SA482F	159
SA482G	159
SA482L	159
SA482M	159
SA482R	159
SA482T	159
SA482X	159
SA482Y	159
SA483A	197
SA483B	197
SA483C	197
SA483D	197
SA483E	197
SA483F	197
SA483G	197
SA483L	197
SA483M	197
SA483R	197
SA483T	197
SA483X	197
SA483Y	197
SA484A	129
SA484B	129
SA484C	129
SA484D	129
SA484E	129
SA484F	129
SA484G	129
SA484L	129
SA484M	129
SA484R	129
SA484T	129
SA484X	129
SA484Y	129
SA485A	129
SA485B	129
SA485C	129
SA485D	129
SA485E	129
SA485F	129
SA485G	129
SA485L	129
SA485M	129
SA485R	129
SA485T	129
SA485X	129
SA485Y	129
SA489A	197
SA489B	197
SA489C	197
SA489D	197
SA489E	197
SA489F	197
SA489G	197
SA489L	197
SA489M	197
SA489R	197
SA489T	197
SA489X	197
SA489Y	197
SA490A	197
SA490B	197
SA490C	197
SA490D	197
SA490E	197
SA490F	197
SA490G	197
SA490L	197
SA490M	197
SA490R	197
SA490T	197
SA490X	197
SA490Y	197
SA493A	159
SA493B	159
SA493C	159
SA493D	159
SA493E	159
SA493F	159
SA493G	159
SA493L	159
SA493M	159
SA493R	159
SA493T	159
SA493X	159
SA493Y	159
SA494A	159
SA494B	159
SA494C	159
SA494D	159
SA494E	159
SA494F	159
SA494G	159
SA494L	159
SA494M	159
SA494R	159
SA494T	159
SA494X	159
SA494Y	159
SA495	106
SA495A	159
SA495B	159
SA495C	159
SA495D	159
SA495E	159
SA495F	159
SA495G	159
SA495L	159
SA495M	159
SA495R	159
SA495T	159
SA495X	159
SA495Y	159
SA496	106
SA496A	106
SA496B	106
SA496C	197
SA496D	197
SA496E	197
SA496F	197
SA496G	197
SA496L	197
SA496M	197
SA496R	197
SA496T	197
SA496X	197
SA496Y	197
SA497A	129
SA497B	129
SA497C	129
SA497D	129
SA497E	129
SA497F	129
SA497G	129
SA497L	129
SA497M	129

PART NUMBER	NTE REPLACEMENT
SA497R	129
SA497T	129
SA497X	129
SA497Y	129
SA498A	129
SA498B	129
SA498C	129
SA498D	129
SA498E	129
SA498F	129
SA498G	129
SA498L	129
SA498M	129
SA498R	129
SA498T	129
SA498X	129
SA498Y	129
SA499A	159
SA499B	159
SA499C	159
SA499D	159
SA499E	159
SA499F	159
SA499G	159
SA499L	159
SA499M	159
SA499R	159
SA499T	159
SA499X	159
SA499Y	159
SA500A	159
SA500B	159
SA500C	159
SA500D	159
SA500E	159
SA500F	159
SA500G	159
SA500L	159
SA500M	159
SA500R	159
SA500T	159
SA500X	159
SA500Y	159
SA501A	129
SA501B	129
SA501C	129
SA501D	129
SA501E	129
SA501F	129
SA501G	129
SA501L	129
SA501M	129
SA501R	129
SA501T	129
SA501X	129
SA501Y	129
SA502A	129
SA502B	129
SA502C	129
SA502D	129
SA502E	129
SA502F	129
SA502G	129
SA502L	129
SA502M	129
SA502R	129
SA502T	129
SA502X	129
SA502Y	129
SA503A	129
SA503B	129
SA503C	129
SA503D	129
SA503E	129
SA503F	129
SA503G	129
SA503L	129
SA503M	129
SA503R	129
SA503T	129
SA503X	129
SA503Y	129
SA504A	129
SA504B	129
SA504C	129
SA504D	129
SA504E	129
SA504F	129
SA504G	129
SA504L	129
SA504M	129
SA504R	129
SA504T	129
SA504X	129
SA504Y	129
SA505A	185
SA505B	185
SA505C	185
SA505D	185
SA505E	185
SA505F	185
SA505G	185
SA505L	185
SA505M	185
SA505R	185
SA505T	185
SA505X	185
SA505Y	185
SA507A	160
SA507B	160
SA507C	160
SA507D	160
SA507E	160
SA507F	160
SA507G	160
SA507L	160
SA507M	160
SA507R	160
SA507T	160
SA507X	160
SA507Y	160
SA509A	159
SA509B	159
SA509C	159
SA509D	159
SA509E	159
SA509F	159
SA509G	159
SA509L	159
SA509M	159
SA509R	159
SA509T	159
SA509X	159
SA509Y	159
SA510A	129
SA510B	129
SA510C	129
SA510D	129
SA510E	129
SA510F	129
SA510G	129
SA510L	129
SA510M	129
SA510R	129
SA510T	129
SA510X	129
SA510Y	129
SA511A	159
SA511B	159
SA511C	159
SA511D	159
SA511E	159
SA511F	159
SA511G	159
SA511L	159
SA511M	159
SA511R	159
SA511T	159
SA511X	159
SA511Y	159
SA512A	129
SA512B	129
SA512C	129
SA512D	129
SA512E	129
SA512F	129
SA512G	129
SA512L	129
SA512M	129
SA512R	129
SA512T	129
SA512X	129
SA512Y	129
SA513A	159
SA513B	159
SA513C	159
SA513D	159
SA513E	159
SA513F	159
SA513G	159
SA513L	159
SA513M	159
SA513R	159
SA513T	159
SA513X	159
SA513Y	159
SA516A	129
SA516B	129
SA516C	129
SA516D	129
SA516E	129
SA516F	129
SA516G	129
SA516L	129
SA516M	129
SA516R	129
SA516T	129
SA516X	129
SA516Y	129
SA517A	126
SA517B	126
SA517C	126
SA517D	126
SA517E	126
SA517F	126
SA517G	126
SA517L	126
SA517M	126
SA517R	126
SA517T	126
SA517X	126
SA517Y	126
SA518A	160
SA518B	160
SA518C	160
SA518D	160
SA518E	160
SA518F	160
SA518G	160
SA518L	160
SA518M	160
SA518R	160
SA518T	160
SA518X	160
SA518Y	160
SA522A	159
SA522B	159
SA522C	159
SA522D	159
SA522E	159
SA522F	159
SA522G	159
SA522L	159
SA522M	159
SA522R	159
SA522T	159
SA522X	159
SA522Y	159
SA525A	159
SA525B	159
SA525C	159
SA525D	159
SA525E	159
SA525F	159
SA525G	159
SA525L	159
SA525M	159
SA525R	159
SA525T	159
SA525X	159
SA525Y	159
SA527A	129
SA527B	129
SA527C	129
SA527D	129
SA527E	129
SA527F	129
SA527G	129
SA527L	129
SA527M	129
SA527R	129
SA527T	129
SA527X	129
SA527Y	129
SA528A	129
SA528B	129
SA528C	129
SA528D	129
SA528E	129
SA528F	129
SA528G	129
SA528L	129
SA528M	129
SA528R	129
SA528T	129
SA528X	129
SA528Y	129
SA529	102A
SA530A	159
SA530B	159
SA530C	159
SA530D	159
SA530E	159
SA530F	159
SA530G	159
SA530L	159
SA530M	159
SA530R	159
SA530T	159
SA530X	159
SA530Y	159
SA532A	129
SA532B	129
SA532C	129
SA532D	129
SA532E	129
SA532F	129
SA532G	129
SA532L	129
SA532M	129
SA532R	129
SA532T	129
SA532X	129
SA532Y	129
SA537	106
SA537A	129
SA537B	129
SA537C	129
SA537D	129
SA537E	129
SA537F	129
SA537G	129
SA537L	129
SA537M	129
SA537R	129
SA537T	129
SA537X	129
SA537Y	129
SA538	106
SA539	106
SA539A	159
SA539B	159
SA539C	159
SA539D	159
SA539E	159
SA539F	159
SA539G	159
SA539L	159
SA539M	159
SA539R	159
SA539T	159
SA539X	159
SA539Y	159
SA540	106
SA542A	159
SA542B	159
SA542C	159
SA542D	159
SA542E	159
SA542F	159
SA542G	159
SA542L	159
SA542M	159
SA542R	159
SA542T	159
SA542X	159
SA542Y	159
SA543A	129
SA543B	129
SA543C	129
SA543D	129
SA543E	129
SA543F	129
SA543G	129
SA543L	129
SA543M	129
SA543R	129
SA543T	129
SA543X	129
SA543Y	129
SA544A	159
SA544B	159
SA544C	159
SA544D	159
SA544E	159
SA544F	159
SA544G	159
SA544L	159
SA544M	159
SA544R	159
SA544T	159
SA544X	159
SA544Y	159
SA545A	159
SA545B	159
SA545C	159
SA545D	159
SA545E	159
SA545F	159
SA545G	159
SA545L	159
SA545M	159
SA545R	159
SA545T	159
SA545X	159
SA545Y	159
SA546A	129
SA546B	129
SA546C	129
SA546D	129
SA546E	129
SA546F	129
SA546G	129
SA546L	129
SA546M	129
SA546R	129
SA546T	129
SA546X	129
SA546Y	129
SA548A	106
SA548B	106
SA548C	106
SA548D	106
SA548E	106
SA548F	106
SA548G	106
SA548L	106
SA548M	106
SA548R	106
SA548T	106
SA548X	106
SA548Y	106
SA550A	129
SA550B	129
SA550C	129
SA550D	129
SA550E	129
SA550F	129
SA550G	129
SA550L	129
SA550M	129
SA550R	129
SA550T	129
SA550X	129
SA550Y	129
SA551A	129
SA551B	129
SA551C	129
SA551D	129
SA551E	129
SA551F	129
SA551G	129
SA551L	129
SA551M	129
SA551R	129
SA551T	129
SA551X	129
SA551Y	129
SA552A	129
SA552B	129
SA552C	129
SA552D	129
SA552E	129
SA552F	129
SA552G	129
SA552L	129
SA552M	129
SA552R	129
SA552T	129
SA552X	129
SA552Y	129
SA560A	129
SA560B	129
SA560C	129
SA560D	129
SA560E	129
SA560F	129
SA560G	129
SA560L	129
SA560M	129
SA560R	129
SA560T	129
SA560X	129
SA560Y	129
SA561A	159
SA561B	159
SA561C	159
SA561D	159
SA561E	159
SA561F	159
SA561G	159
SA561L	159
SA561M	159
SA561R	159
SA561T	159
SA561X	159
SA561Y	159
SA562A	159
SA562B	159
SA562C	159
SA562D	159
SA562E	159
SA562F	159
SA562G	159
SA562L	159
SA562M	159
SA562R	159
SA562T	159
SA562X	159
SA562Y	159
SA564A	159
SA564B	159
SA564C	159
SA564D	159
SA564E	159
SA564F	159
SA564G	159
SA564L	159
SA564M	159
SA564R	159
SA564T	159
SA564X	159
SA564Y	159
SA565	102A
SA565A	159
SA565B	159
SA565C	159
SA565D	159
SA565E	159
SA565F	159
SA565G	159
SA565L	159
SA565M	159
SA565R	159
SA565T	159
SA565X	159
SA565Y	159
SA567A	159
SA567B	159
SA567C	159
SA567D	159
SA567E	159
SA567F	159
SA567G	159
SA567L	159
SA567M	159
SA567R	159
SA567T	159
SA567X	159
SA567Y	159
SA568A	106
SA568B	106
SA568C	106
SA568D	106
SA568E	106
SA568F	106
SA568G	106
SA568L	106
SA568M	106
SA568R	106
SA568T	106
SA568X	106
SA568Y	106
SA569A	159
SA569B	159
SA569C	159
SA569D	159
SA569E	159
SA569F	159
SA569G	159
SA569L	159
SA569M	159
SA569R	159
SA569T	159
SA569X	159
SA569Y	159
SA570A	159
SA570B	159
SA570C	159
SA570D	159
SA570E	159
SA570F	159
SA570G	159
SA570L	159
SA570M	159
SA570R	159
SA570T	159
SA570X	159
SA570Y	159
SA571A	129
SA571B	129
SA571C	129
SA571D	129
SA571E	129
SA571F	129
SA571G	129
SA571L	129
SA571M	129
SA571R	129
SA571T	129
SA571X	129
SA571Y	129
SA592A	159
SA592B	159
SA592C	159
SA592D	159
SA592E	159
SA592F	159
SA592G	159
SA592L	159
SA592M	159
SA592R	159
SA592T	159
SA592X	159
SA592Y	159
SA594A	129
SA594B	129
SA594C	129
SA594D	129
SA594E	129
SA594F	129
SA594G	129
SA594L	129
SA594M	129
SA594R	129
SA594T	129
SA594X	129
SA594Y	129
SA597A	129
SA597B	129
SA597C	129
SA597D	129
SA597E	129
SA597F	129
SA597G	129
SA597L	129
SA597M	129
SA597R	129
SA597T	129
SA597X	129
SA597Y	129
SA603A	106
SA603B	106
SA603C	106
SA603D	106
SA603E	106
SA603F	106
SA603G	106
SA603L	106
SA603M	106
SA603R	106
SA603T	106
SA603X	106
SA603Y	106
SA604A	129
SA604B	129
SA604C	129
SA604D	129
SA604E	129
SA604F	129
SA604G	129
SA604L	129
SA604M	129
SA604R	129
SA604T	129
SA604X	129
SA604Y	129
SA606A	129
SA606B	129
SA606C	129
SA606D	129
SA606E	129
SA606F	129
SA606G	129
SA606L	129
SA606M	129
SA606R	129
SA606T	129
SA606X	129
SA606Y	129
SA607A	129
SA607B	129
SA607C	129
SA607D	129
SA607E	129
SA607F	129
SA607G	129
SA607L	129
SA607M	129
SA607R	129
SA607T	129
SA607X	129
SA607Y	129
SA608A	159
SA608B	159
SA608C	159
SA608D	159
SA608E	159
SA608F	159
SA608G	159
SA608L	159
SA608M	159
SA608R	159
SA608T	159
SA608X	159
SA608Y	159
SA609A	159
SA609B	159
SA609C	159
SA609D	159
SA609E	159
SA609F	159
SA609G	159
SA609L	159
SA609M	159
SA609R	159
SA609T	159
SA609X	159
SA609Y	159
SA610A	129
SA610B	129
SA610C	129
SA610E	129
SA610F	129
SA610G	129
SA610L	129
SA610M	129
SA610R	129
SA610T	129
SA610X	129
SA610Y	129
SA611A	129
SA611B	129
SA611C	129
SA611D	129
SA611E	129
SA611F	129
SA611G	129
SA611L	129
SA611M	129
SA611R	129
SA611T	129
SA611X	129
SA611Y	129
SA612A	129
SA612B	129
SA612C	129
SA612D	129
SA612E	129
SA612F	129
SA612G	129
SA612L	129
SA612M	129
SA612R	129
SA612T	129
SA612X	129
SA612Y	129
SA616B	197
SA623A	197
SA623B	197
SA623C	197
SA623D	197
SA623E	197
SA623F	197
SA623G	197
SA623L	197
SA623M	197
SA623R	197
SA623T	197
SA623X	197
SA623Y	197
SA624A	197
SA624B	197
SA624C	197
SA624D	197
SA624E	197
SA624F	197
SA624G	197
SA624L	197
SA624M	197
SA624R	197
SA624T	197
SA624X	197
SA624Y	197
SA628A	159
SA628B	159
SA628C	159
SA628D	159
SA628E	159
SA628F	159
SA628G	159
SA628L	159
SA628M	159
SA628R	159
SA628T	159
SA628X	159
SA628Y	159
SA629A	159
SA629B	159
SA629C	159
SA629D	159
SA629E	159
SA629F	159
SA629G	159
SA629L	159
SA629M	159
SA629R	159
SA629T	159
SA634A	197
SA634B	197
SA634C	197
SA634D	197
SA634E	197
SA634F	197
SA634G	197
SA634L	197
SA634M	197
SA634R	197

PART NUMBER	NTE REPLACEMENT
SA634T	197
SA634X	197
SA634Y	197
SA636A	197
SA636B	197
SA636C	197
SA636D	197
SA636E	197
SA636F	197
SA636G	197
SA636L	197
SA636M	197
SA636R	197
SA636T	197
SA636X	197
SA636Y	197
SA639A	159
SA639B	159
SA639C	159
SA639D	159
SA639E	159
SA639F	159
SA639G	159
SA639L	159
SA639M	159
SA639R	159
SA639T	159
SA640A	106
SA640B	106
SA640C	106
SA640D	106
SA640E	106
SA640F	106
SA640G	106
SA640L	106
SA640M	106
SA640R	106
SA640T	106
SA640X	106
SA640Y	106
SA641A	159
SA641B	159
SA641C	159
SA641D	159
SA641E	159
SA641F	159
SA641G	159
SA641L	159
SA641M	159
SA641R	159
SA641T	159
SA641X	159
SA641Y	159
SA642A	197
SA642B	197
SA642C	197
SA642D	197
SA642E	197
SA642F	197
SA642G	197
SA642L	197
SA642M	197
SA642R	197
SA642T	197
SA642X	197
SA642Y	197
SA643A	125
SA643B	125
SA643C	125
SA643D	125
SA643E	125
SA643F	125
SA643G	125
SA643L	125
SA643M	125
SA643R	125
SA643T	125
SA643X	125
SA643Y	125
SA645A	210
SA645B	210
SA645C	210
SA645D	210
SA645E	210
SA645F	210
SA645G	210
SA645L	210
SA645M	210
SA645R	210
SA645T	210
SA645X	210
SA645Y	210
SA646	102A
SA646A	187A
SA646B	187A
SA646C	187A
SA646D	187A
SA646E	187A
SA646F	187A
SA646G	187A
SA646L	187A
SA646M	187A
SA646R	187A
SA646T	187A
SA646X	187A
SA646Y	187A
SA657A	219
SA657B	219
SA657C	219
SA657D	219
SA657E	219
SA657F	219
SA657G	219
SA657L	219
SA657M	219
SA657R	219
SA657T	219
SA657X	219
SA657Y	219
SA658A	219
SA658B	219
SA658C	219
SA658D	219
SA658E	219
SA658F	219
SA658G	219
SA658L	219
SA658M	219
SA658R	219
SA658T	219
SA658X	219
SA658Y	219
SA659A	159
SA659B	159
SA659C	159
SA659D	159
SA659E	159
SA659F	159
SA659G	159
SA659L	159
SA659M	159
SA659R	159
SA659T	159
SA659X	159
SA659Y	159
SA661A	159
SA661B	159
SA661C	159
SA661D	159
SA661E	159
SA661F	159
SA661G	159
SA661L	159
SA661M	159
SA661R	159
SA661T	159
SA661X	159
SA661Y	159
SA663A	219
SA663B	219
SA663C	219
SA663D	219
SA663E	219
SA663F	219
SA663G	219
SA663L	219
SA663M	219
SA663R	219
SA663T	219
SA663X	219
SA663Y	219
SA666A	159
SA666B	159
SA666C	159
SA666D	159
SA666E	159
SA666F	159
SA666G	159
SA666L	159
SA666M	159
SA666R	159
SA666T	159
SA666X	159
SA666Y	159
SA670A	197
SA670B	197
SA670C	197
SA670D	197
SA670E	197
SA670F	197
SA670G	197
SA670L	197
SA670M	197
SA670R	197
SA670T	197
SA670X	197
SA670Y	197
SA671A	197
SA671B	197
SA671C	197
SA671D	197
SA671E	197
SA671F	197
SA671G	197
SA671L	197
SA671M	197
SA671R	197
SA671T	197
SA671X	197
SA671Y	197
SA672A	159
SA672B	159
SA672C	159
SA672D	159
SA672E	159
SA672F	159
SA672G	159
SA672L	159
SA672M	159
SA672R	159
SA672T	159
SA672X	159
SA672Y	159
SA673A	159
SA673B	159
SA673C	159
SA673D	159
SA673E	159
SA673F	159
SA673G	159
SA673L	159
SA673R	159
SA673T	159
SA673X	159
SA673Y	159
SA677A	106
SA677B	106
SA677C	106
SA677D	106
SA677E	106
SA677F	106
SA677G	106
SA677L	106
SA677M	106
SA677R	106
SA677T	106
SA677X	106
SA677Y	106
SA678A	106
SA678B	106
SA678C	106
SA678D	106
SA678E	106
SA678F	106
SA678G	106
SA678L	106
SA678M	106
SA678R	106
SA678T	106
SA678X	106
SA678Y	106
SA680A	219
SA680B	219
SA680C	219
SA680D	219
SA680E	219
SA680F	219
SA680G	219
SA680L	219
SA680M	219
SA680R	219
SA680T	219
SA680X	219
SA680Y	219
SA681	158
SA682A	129
SA682B	129
SA682C	129
SA682D	129
SA682E	129
SA682F	129
SA682G	129
SA682L	129
SA682M	129
SA682R	129
SA682T	129
SA682X	129
SA682Y	129
SA683A	129
SA683B	129
SA683C	129
SA683D	129
SA683E	129
SA683F	129
SA683G	129
SA683L	129
SA683M	129
SA683R	129
SA683T	129
SA683X	129
SA683Y	129
SA684A	129
SA684B	129
SA684C	129
SA684D	129
SA684E	129
SA684F	129
SA684G	129
SA684L	129
SA684M	129
SA684R	129
SA684T	129
SA684X	129
SA684Y	129
SA685A	159
SA685B	159
SA685C	159
SA685D	159
SA685E	159
SA685F	159
SA685G	159
SA685L	159
SA685M	159
SA685R	159
SA685T	159
SA685X	159
SA685Y	159
SA695A	129
SA695B	129
SA695C	129
SA695D	129
SA695E	129
SA695F	129
SA695G	129
SA695L	129
SA695M	129
SA695R	129
SA695T	129
SA695X	129
SA695Y	129
SA696A	106
SA696B	106
SA696C	106
SA696D	106
SA696E	106
SA696F	106
SA696G	106
SA696L	106
SA696M	106
SA696R	106
SA696T	106
SA696X	106
SA696Y	106
SA697A	159
SA697B	159
SA697C	159
SA697D	159
SA697E	159
SA697F	159
SA697G	159
SA697L	159
SA697M	159
SA697R	159
SA697T	159
SA697X	159
SA697Y	159
SA699A	197
SA699B	197
SA699C	197
SA699D	197
SA699E	197
SA699F	197
SA699G	197
SA699L	197
SA699M	197
SA699R	197
SA699T	197
SA699X	197
SA699Y	197
SA700A	197
SA700B	197
SA700C	197
SA700D	197
SA700E	197
SA700F	197
SA700G	197
SA700L	197
SA700M	197
SA700R	197
SA700T	197
SA700X	197
SA700Y	197
SA701A	106
SA701B	106
SA701C	106
SA701D	106
SA701E	106
SA701F	106
SA701G	106
SA701L	106
SA701M	106
SA701R	106
SA701T	106
SA701X	106
SA701Y	106
SA704A	106
SA704B	106
SA704C	106
SA704D	106
SA704E	106
SA704F	106
SA704G	106
SA704L	106
SA704M	106
SA704R	106
SA704T	106
SA704X	106
SA704Y	106
SA705A	106
SA705B	106
SA705C	106
SA705D	106
SA705E	106
SA705F	106
SA705G	106
SA705L	106
SA705M	106
SA705R	106
SA705T	106
SA705X	106
SA705Y	106
SA707A	159
SA707B	159
SA707C	159
SA707D	159
SA707E	159
SA707F	159
SA707G	159
SA707L	159
SA707M	159
SA707R	159
SA707T	159
SA707X	159
SA707Y	159
SA708A	211
SA708B	211
SA708C	211
SA708D	211
SA708E	211
SA708F	211
SA708G	211
SA708L	211
SA708M	211
SA708R	211
SA708T	211
SA708X	211
SA708Y	211
SA717A	211
SA717B	211
SA717C	211
SA717D	211
SA717E	211
SA717F	211
SA717G	211
SA717L	211
SA717M	211
SA717R	211
SA717T	211
SA717X	211
SA717Y	211
SA719A	129
SA719B	129
SA719C	129
SA719D	129
SA719E	129
SA719F	129
SA719G	129
SA719L	129
SA719M	129
SA719R	129
SA719T	129
SA719X	129
SA719Y	129
SA720A	159
SA720B	159
SA720C	159
SA720D	159
SA720E	159
SA720F	159
SA720G	159
SA720L	159
SA720M	159
SA720R	159
SA720T	159
SA720X	159
SA720Y	159
SA721A	159
SA721B	159
SA721C	159
SA721D	159
SA721E	159
SA721F	159
SA721G	159
SA721L	159
SA721M	159
SA721R	159
SA721T	159
SA721X	159
SA721Y	159
SA733A	129
SA733B	129
SA733C	129
SA733D	129
SA733E	129
SA733F	129
SA733G	129
SA733L	129
SA733M	129
SA733R	129
SA733T	129
SA733X	129
SA733Y	129
SA736A	106
SA736B	106
SA736C	106
SA736D	106
SA736E	106
SA736F	106
SA736G	106
SA736L	106
SA736M	106
SA736R	106
SA736T	106
SA736X	106
SA736Y	106
SA738A	197
SA738B	197
SA738C	197
SA738D	197
SA738E	197
SA738F	197
SA738G	197
SA738L	197
SA738M	197
SA738R	197
SA738T	197
SA738X	197
SA738Y	197
SA741A	159
SA741B	159
SA741C	159
SA741D	159
SA741E	159
SA741F	159
SA741G	159
SA741L	159
SA741M	159
SA741R	159
SA741T	159
SA741X	159
SA741Y	159
SA742A	129
SA742B	129
SA742C	129
SA742D	129
SA742E	129
SA742F	129
SA742G	129
SA742L	129
SA742M	129
SA742R	129
SA742T	129
SA742X	129
SA742Y	129
SA743A	129
SA743B	129
SA743C	129
SA743D	129
SA743E	129
SA743F	129
SA743G	129
SA743L	129
SA743M	129
SA743R	129
SA743T	129
SA743X	129
SA743Y	129
SA751A	129
SA751B	129
SA751C	129
SA751D	129
SA751E	129
SA751F	129
SA751G	129
SA751L	129
SA751M	129
SA751R	129
SA751T	129
SA751X	129
SA751Y	129
SA754A	197
SA754B	197
SA754C	197
SA754D	197
SA754E	197
SA754F	197
SA754G	197
SA754L	197
SA754M	197
SA754R	197
SA754T	197
SA754X	197
SA754Y	197
SA755A	197
SA755B	197
SA755C	197
SA755D	197
SA755E	197
SA755F	197
SA755G	197
SA755L	197
SA755M	197
SA755T	197
SA755X	197
SA755Y	197
SA756A	219
SA756B	219
SA756C	219
SA756D	219
SA756E	219
SA756F	219
SA756G	219
SA756L	219
SA756M	219
SA756R	219
SA756T	219
SA756X	219
SA756Y	219
SA773A	159
SA773B	159
SA773C	159
SA773D	159
SA773E	159
SA773F	159
SA773G	159
SA773L	159
SA773M	159
SA773R	159
SA773T	159
SA773X	159
SA773Y	159
SA775A	197
SA775B	197
SA775C	197
SA775D	197
SA775E	197
SA775F	197
SA775G	197
SA775L	197
SA775M	197
SA775R	197
SA775T	197
SA775X	197
SA775Y	197
SA778A	159
SA778B	159
SA778C	159
SA778D	159
SA778E	159
SA778F	159
SA778G	159
SA778L	159
SA778M	159
SA778R	159
SA778T	159
SA778Y	159
SA779A	197
SA779B	197
SA779C	197
SA779D	197
SA779E	197
SA779F	197
SA779G	197
SA779L	197
SA779M	197
SA779R	197
SA779T	197
SA779X	197
SA779Y	197
SA780A	197
SA780B	197
SA780C	197
SA780D	197
SA780E	197
SA780F	197
SA780G	197
SA780L	197
SA780M	197
SA780R	197
SA780T	197
SA780X	197
SA780Y	197
SA816A	197
SA816B	197
SA816C	197
SA816D	197
SA816E	197
SA816F	197
SA816G	197
SA816L	197
SA816M	197
SA816R	197
SA816T	197
SA816X	197
SA816Y	197
SA821	137A
SA821A	137A
SA823	137A
SA823A	137A
SA825	137A
SA825A	137A
SA827	137A
SA827A	137A
SA829	137A
SA829A	137A
SA836A	159
SA836B	159
SA836C	159
SA836D	159
SA836E	159
SA836F	159
SA836G	159
SA836L	159
SA836M	159
SA836R	159
SA836T	159
SA836X	159
SA836Y	159
SA841A	159
SA841B	159
SA841C	159
SA841D	159
SA841E	159
SA841F	159
SA841G	159
SA841L	159
SA841M	159
SA841R	159
SA841T	159
SA841X	159
SA841Y	159
SA842A	159
SA842B	159
SA842C	159
SA842D	159
SA842E	159
SA842F	159
SA842G	159
SA842L	159
SA842M	159
SA842R	159
SA842T	159
SA842X	159
SA842Y	159
SA853	102A
SA909A	159
SA909B	159
SA909C	159
SA909D	159
SA909E	159
SA909F	159
SA909G	159
SA909L	159
SA909M	159
SA909R	159
SA909T	159
SA909X	159
SA909Y	159
SA921R	91
SA1015(Y0	290A
SA1034KR	2409
SA7805CDA	931
SA7805CU	960
SA7812CDA	933
SA7812CU	966
SA-2	125
SA-2B	116
SA-7	101
SA-93792	177
SA-93794	139A
SAB1044	161
SAB3037	1786
SAB3037N	1786
SAB3469	161
SAC40	106
SAC40A	106
SAC40B	106
SAC42	106

PART NUMBER	NTE REPLACEMENT
SAC42A	106
SAC42B	106
SAC44	106
SAC660	56010
SAC-1843	107
SAE-1	280
SAE-2	281
SAJ72156	1091
SAJ72157	1046
SAJ72158	1047
SAJ72161	1089
SATCHZ339	108
SAW-1S1941	116
SAW-1S1944	116
SAW-2SB56	126
SAW-2SC372GR	123AP
SAW-2SC372Y	123AP
SAW-2SC945R	123AP
SB01	116
SB01-02	177
SB0319	152
SB0419	218
SB1-01-04	116
SB1Z	5800
SB2C	125
SB2CH	125
SB2G	506
SB5	130
SB6	130
SB7	130
SB100	126
SB101	160
SB102	160
SB103	160
SB120	585
SB130	585
SB140	585
SB168	102A
SB169	102A
SB190	578
SB200	126
SB302	116
SB309A	166
SB309C	166
SB315	116
SB332	116
SB333	116
SB390	579
SB393	116
SB402L	5309
SB600	5329
SB601	5329
SB602	5329
SB604	5330
SB606	5330
SB608	5331
SB610	5331
SB821	137A
SB821A	137A
SB822P	21
SB823	137A
SB823A	137A
SB825	137A
SB825A	137A
SB827	137A
SB827A	137A
SB829	137A
SB829A	137A
SB1000	116
SB5122	126
SB-03	116
SB-1	506
SB-1B	506
SB-1Z	116
SB-2	551
SB-2B	551
SB-2C	551
SB-2C(H)	552
SB-2CGL	525
SB-2CH	506
SB-2T	506
SB-3	116
SB-3-02	116
SB-3F	156
SB-3F01	116
SB-3N	116
SB-15	614
SB-100	126
SB-309A	116
SB-309C	116
SB-1000	125
SBA5089	1690
SBEB05	166
SBEB1	166
SBEB2	167
SBEB4	168
SBEB6	169
SBP1020T	6085
SBP1030T	6085
SBP1035T	6085
SBP1045T	6085
SBP1620T	6087
SBP1630T	6087
SBP1635T	6087
SBP1640T	6087
SBP1645T	6087
SBP3020P	6090
SBP3030P	6090
SBP3035P	6090
SBP3040P	6090
SBP3045P	6090
SBR-260	116
SC	614
SC05	116
SC05E	116
SC0321	181
SC0328	181
SC0421	180
SC0428	180
SC0515	5940
SC1	116
SC2	116
SC2C	116
SC4	116
SC6	117
SC7(PHILCO)	5457
SC8	125
SC8A	125
SC10	125
SC10A	125
SC12	102A
SC12(DIODE)	177
SC15	614
SC16	116
SC20	109
SC23-3	116
SC23-9	116
SC35A	5673
SC35B	5673
SC35D	5675
SC35F	5673
SC40B	5673
SC40B-1	5675
SC40D	5675
SC40E	5676
SC43	100
SC44	100
SC45	102A
SC45A	5675
SC45B	5673
SC45B13	5673
SC45D	5675
SC45D13	5675
SC45E	5676
SC45E13	5676
SC45F	5675
SC46	100
SC50A	5675
SC50B	5673
SC50B13	5673
SC50D	5675
SC50D13	5675
SC50E	5676
SC50E13	5676
SC50F	5675
SC54	109
SC56	103A
SC60A	5682
SC60A13	5682
SC60B	5683
SC60B13	5683
SC60C	5684
SC60C13	5684
SC60D	5685
SC60D13	5685
SC60E	5685
SC60E13	5685
SC60F	5681
SC60F13	5681
SC63	102A
SC65	123AP
SC66	102A
SC68	102A
SC69	102A
SC70	121
SC71	160
SC72	160
SC73	102A
SC74	160
SC78	160
SC79	160
SC80	160
SC91	139A
SC108	123AP
SC108A	123AP
SC108B	123AP
SC109A	123AP
SC110	116
SC115	5942
SC116P1	725
SC140B	5645
SC140D	5645
SC140E	5645
SC140M	5645
SC141A	5632
SC141A1	5632
SC141A2	5632
SC141A3	5632
SC141A4	5632
SC141A5	5632
SC141A6	5632
SC141B	5633
SC141B1	5633
SC141B2	5633
SC141B3	5633
SC141B4	5633
SC141B5	5633
SC141B6	5633
SC141C	5634
SC141C1	5634
SC141C2	5634
SC141C3	5634
SC141C4	5634
SC141C5	5634
SC141C6	5634
SC141D	5635
SC141D1	5635
SC141D2	5635
SC141D3	5635
SC141D4	5635
SC141D5	5635
SC141D6	5635
SC141E	5636
SC141E1	5636
SC141E2	5636
SC141E3	5636
SC141E4	5636
SC141E5	5636
SC141E6	5636
SC141F	5631
SC141F1	5631
SC141F2	5631
SC141F3	5631
SC141F4	5631
SC141F5	5631
SC141F6	5631
SC141M	5637
SC142B	5645
SC142D	5645
SC142E	5645
SC142M	5645
SC143D	5635
SC143E	5636
SC143M	5637
SC146A	5632
SC146A1	5632
SC146A2	5632
SC146A3	5632
SC146A4	5632
SC146A5	5632
SC146A6	5632
SC146B	5633
SC146B1	5633
SC146B2	5633
SC146B3	5633
SC146B4	5633
SC146B5	5633
SC146B6	5633
SC146C	5634
SC146C1	5634
SC146C2	5634
SC146C3	5634
SC146C4	5634
SC146C5	5634
SC146D	5635
SC146D1	5635
SC146D2	5635
SC146D3	5635
SC146D4	5635
SC146D5	5635
SC146D6	5635
SC146E	5636
SC146E1	5636
SC146E3	5636
SC146E4	5636
SC146E5	5636
SC146E6	5636
SC146F	5631
SC146F1	5631
SC146F2	5631
SC146F3	5631
SC146F4	5631
SC146F5	5631
SC146F6	5631
SC146M	5637
SC147	5645
SC147A	5645
SC147B	5645
SC147D	5645
SC147E	5645
SC147M	5645
SC148	5645
SC148A	199
SC148B	5645
SC148C	199
SC148D	5645
SC148E	5645
SC148M	5645
SC149	56004
SC149B	56004
SC149D	56006
SC149E	56008
SC149M	56008
SC151B	56004
SC151D	56006
SC151E	56008
SC151M	56008
SC157	194
SC157A	194
SC157VI	194
SC158	194
SC158A	194
SC158B	234
SC158VI	194
SC159	194
SC159A	194
SC159B	234
SC160B	56014
SC160D	56014
SC174	194
SC174A	194
SC174B	194
SC215	5942
SC240B	5673
SC240B2	56022
SC240B13	5673
SC240D	5675
SC240D2	56024
SC240D13	5675
SC240E	5676
SC240E2	56026
SC240E13	5676
SC240M	5677
SC241B	5688
SC241D	5689
SC241M	5690
SC245B	5673
SC245B2	56022
SC245B13	5673
SC245D	5675
SC245D2	56024
SC245D13	5677
SC245E	5676
SC245E2	56026
SC245E13	5676
SC245M	5677
SC246B	5688
SC246D	5689
SC246E	5690
SC246M	5690
SC250B	5673
SC250B2	56022
SC250B13	5673
SC250D	5675
SC250D2	56024
SC250D13	5675
SC250E	5676
SC250E2	56026
SC250E13	5676
SC251B	5688
SC251D	5689
SC251E	5690
SC251M	5690
SC256	194
SC256A	194
SC256B	193
SC257	194
SC257A	194
SC257VI	194
SC258	194
SC258A	194
SC258B	234
SC258VI	194
SC259	194
SC259A	194
SC259B	234
SC260B	5693
SC260B2	56022
SC260B3	56022
SC260D	5695
SC260D2	56024
SC260D3	56024
SC260E	5697
SC260E2	56026
SC260E3	56026
SC260M	5687
SC260M2	56026
SC260M3	56026
SC261B	5688
SC261D	5689
SC261E	5690
SC261M	5690
SC265B	5693
SC265B2	56022
SC265B3	56022
SC265D	5695
SC265D2	56024
SC265D3	56024
SC265E2	56026
SC265E3	56026
SC265M2	56026
SC265M3	56026
SC266B	5688
SC266D	5689
SC266E	5690
SC266M	5690
SC305	116
SC350	123AP
SC365	129
SC400Y	124
SC441	198
SC609	237
SC727	124
SC741T	941
SC777	124
SC785	123
SC786	128
SC821	137A
SC821A	137A
SC823	137A
SC823A	137A
SC825	137A
SC825A	137A
SC827	137A
SC827A	137A
SC829	137A
SC829A	137A
SC832	123AP
SC842	123AP
SC843	129
SC843(T.I.)	154
SC1001	123AP
SC1007	160
SC1010	123AP
SC1042	295
SC1168G	123AP
SC1168H	123AP
SC1170YG	238
SC1182	914
SC1227F	108
SC1227G	108
SC1229E	128
SC1229G	123AP
SC1294H	129
SC1414	116
SC1431	116
SC1431(GE)	177
SC1631	116
SC1631(GE)	116
SC1940G	704
SC2914	725
SC2914P	725
SC4001BH	4001B
SC4001UBC	4001B
SC4004	124
SC4010	123AP
SC4044	123AP
SC4073	103A
SC4116	116
SC4131	128
SC4131-1	128
SC4133	184
SC4167	128
SC4244	128
SC4274	131
SC4303	152
SC4303-1	152
SC4303-2	152
SC4308	152
SC5116L	725
SC5116P	725
SC5175G	941
SC5740PQ	722
SC5743P	722
SC5747	799
SC8705P	722
SC9426P	722
SC9430P	747
SC9431P	749
SC9436P	712
SC9963P	9924
SC9965P	9989
SC17063L	725
SC20575	703
SC42502P	991
SC71280K	1916
SC-4	116
SC-6	109
SC-7	5457
SC-7(PHILCO)	5457
SC-12	102A
SC-15	613
SC-16	116
SC-20	614
SC-29	113A
SC-56	103A
SC-63	102A
SC-65	123AP
SC-66	102A
SC-68	102A
SC-69	102A
SC-70	121
SC-71	160
SC-72	160
SC-73	102A
SC-74	160
SC-78	160
SC-79	160
SC-80	160
SC-110	116
SC-727	124
SC-832	123AP
SC-1016	519
SC-4004	124
SC-4044	123AP
SC-4131	124
SC-4131-1	124
SC-4167	124
SC-4244	123AP
SCA05	116
SCA1	116
SCA2	116
SCA3	116
SCA4	116
SCA5	116
SCA6	116
SCA8	125
SCA10	125
SCA45A	513
SCA1103	116
SCA3021	108
SCA3244	199
SCA-45A	513
SCAJ05	5312
SCAJ1	5312
SCAJ2	5313
SCAJ3	5314
SCAJ4	5314
SCAJ6	5315
SCBR05F	125
SCBR1F	125
SCBR6	156
SCBR6F	125
SCBR10	156
SCBR35F	125
SCC321	181
SCC421	180
SCD11B1	3084
SCD11B2	3084
SCD11B3	3084
SCD255	3083
SCD321	181
SCD421	180
SCD T334	153
SCD-1062013	9158
SCD-T320	130
SCD-T322	123AP
SCD-T326	159
SCD-T330	152
SCD-T334	153
SCDT323	123AP
SCE1	116
SCE2	116
SCE3	116
SCE4	116
SCE6	116
SCE8	125
SCE10	125
SCE321	181
SCE421	180
SCI44191005	128
SCI444103053	128
SCI444204037	129
SCI444291004	129
SCITT310YXXXX	614
SCITT410STXXX	614
SCL4000	4000
SCL4000B	4000
SCL4000BC	4000
SCL4000BD	4000
SCL4000BE	4000
SCL4000BF	4000
SCL4000BH	4000
SCL4001	4001B
SCL4001B	4001B
SCL4001BC	4001B
SCL4001BD	4001B
SCL4001BE	4001B
SCL4001BF	4001B
SCL4001UB	4001B
SCL4001UBD	4001B
SCL4001UBE	4001B
SCL4001UBF	4001B
SCL4001UBH	4001B
SCL4002	4002B
SCL4002B	4002B
SCL4002BC	4002B
SCL4002BD	4002B
SCL4002BE	4002B
SCL4002BF	4002B
SCL4002BH	4002B
SCL4006B	4006B
SCL4007UB	4007
SCL4008B	4008B
SCL4008BC	4008B
SCL4008BD	4008B
SCL4008BE	4008B
SCL4008BF	4008B
SCL4008BH	4008B
SCL4008BP	4008B
SCL4011	4011B
SCL4011B	4011B
SCL4011BC	4011B
SCL4011BD	4011B
SCL4011BE	4011B
SCL4011BF	4011B
SCL4011BH	4011B
SCL4011UB	4011B
SCL4011UBC	4011B
SCL4011UBD	4011B
SCL4011UBE	4011B
SCL4011UBF	4011B
SCL4011UBH	4011B
SCL4012	4012B
SCL4012B	4012B
SCL4012BC	4012B
SCL4012BD	4012B
SCL4012BE	4012B
SCL4012BF	4012B
SCL4012BH	4012B
SCL4013	4013B
SCL4013AC	4013B
SCL4013AD	4013B
SCL4013AE	4013B
SCL4013AF	4013B
SCL4013AH	4013B
SCL4013B	4013B
SCL4013BC	4013B
SCL4013BD	4013B
SCL4013BE	4013B
SCL4013BF	4013B
SCL4013BH	4013B
SCL4013BP	4013B
SCL4014	4014B
SCL4014B	4014B
SCL4014BE	4014B
SCL4015	4015B
SCL4015B	4015B
SCL4016	4016B
SCL4016B	4016B
SCL4016BE	4016B
SCL4017	4017B
SCL4017ABC	4017B
SCL4017ABD	4017B
SCL4017ABE	4017B
SCL4017ABF	4017B
SCL4017ABH	4017B
SCL4017AC	4017B
SCL4017AD	4017B
SCL4017AE	4017B
SCL4017AF	4017B
SCL4017AH	4017B
SCL4017B	4017B
SCL4017BC	4017B
SCL4017BD	4017B
SCL4017BE	4017B
SCL4017BF	4017B
SCL4017BH	4017B
SCL4018AC	4018B
SCL4018AD	4018B
SCL4018AE	4018B
SCL4018AF	4018B
SCL4018AH	4018B
SCL4018B	4018B
SCL4018BD	4018B
SCL4018BE	4018B
SCL4018BF	4018B
SCL4018BH	4018B
SCL4019	4019B
SCL4019B	4019B
SCL4020	4020B
SCL4020ABC	4020B
SCL4020ABD	4020B
SCL4020ABE	4020B
SCL4020ABF	4020B
SCL4020ABH	4020B
SCL4020AC	4020B
SCL4020AD	4020B
SCL4020AE	4020B
SCL4020AF	4020B
SCL4020AH	4020B
SCL4020B	4020B
SCL4021	4021B
SCL4021B	4021B
SCL4022ABC	4022B
SCL4022ABD	4022B
SCL4022ABE	4022B
SCL4022ABF	4022B
SCL4022ABH	4022B
SCL4022AC	4022B
SCL4022AD	4022B
SCL4022AE	4022B
SCL4022AF	4022B
SCL4022AH	4022B
SCL4022B	4022B
SCL4022BC	4022B
SCL4022BD	4022B
SCL4022BE	4022B
SCL4022BF	4022B
SCL4022BH	4022B
SCL4023	4023B
SCL4023AC	4023B
SCL4023AD	4023B
SCL4023AE	4023B
SCL4023AF	4023B
SCL4023AH	4023B
SCL4023B	4023B
SCL4023BC	4023B
SCL4023BD	4023B
SCL4023BE	4023B
SCL4023BF	4023B
SCL4023BH	4023B
SCL4024	4024B
SCL4024AC	4024B
SCL4024AD	4024B
SCL4024AE	4024B
SCL4024AF	4024B
SCL4024AH	4024B
SCL4024AT	4024B
SCL4024B	4024B
SCL4024BC	4024B
SCL4024BD	4024B
SCL4024BE	4024B
SCL4024BF	4024B
SCL4024BH	4024B
SCL4025	4025B
SCL4025AC	4025B
SCL4025AD	4025B
SCL4025AE	4025B
SCL4025AF	4025B
SCL4025AH	4025B
SCL4025B	4025B
SCL4025BC	4025B
SCL4025BD	4025B
SCL4025BE	4025B
SCL4025BF	4025B
SCL4025BH	4025B
SCL4027	4027B
SCL4027B	4027B
SCL4027BC	4027B
SCL4027BD	4027B
SCL4027BE	4027B
SCL4027BF	4027B
SCL4027BH	4027B
SCL4028AC	4028B
SCL4028AD	4028B
SCL4028AE	4028B
SCL4028AF	4028B
SCL4028AH	4028B
SCL4028B	4028B
SCL4028BC	4028B
SCL4028BD	4028B
SCL4028BE	4028B
SCL4028BF	4028B
SCL4028BH	4028B
SCL4029AC	4029B
SCL4029AD	4029B
SCL4029AE	4029B
SCL4029AF	4029B
SCL4029AH	4029B
SCL4029B	4029B
SCL4029BC	4029B
SCL4029BD	4029B
SCL4029BE	4029B
SCL4029BF	4029B
SCL4029BH	4029B
SCL4030	4030B
SCL4030AC	4030B
SCL4030AD	4030B
SCL4030AE	4030B
SCL4030AF	4030B
SCL4030AH	4030B
SCL4030BC	4030B
SCL4030BD	4030B
SCL4030BE	4030B
SCL4030BF	4030B
SCL4030BH	4030B
SCL4033ABE	4033B

PART NUMBER	NTE REPLACEMENT
SCL4034B	4034B
SCL4035B	4035B
SCL4040	4040B
SCL4040ABC	4040B
SCL4040ABD	4040B
SCL4040ABE	4040B
SCL4040ABF	4040B
SCL4040ABH	4040B
SCL4040AC	4040B
SCL4040AD	4040B
SCL4040AE	4040B
SCL4040AF	4040B
SCL4040AH	4040B
SCL4040B	4040B
SCL4041UB	4041
SCL4042	4042B
SCL4042B	4042B
SCL4042BC	4042B
SCL4042BD	4042B
SCL4042BE	4042B
SCL4042BF	4042B
SCL4042BH	4042B
SCL4043ABC	4043B
SCL4043ABD	4043B
SCL4043ABE	4043B
SCL4043ABF	4043B
SCL4043ABH	4043B
SCL4043B	4043B
SCL4043BC	4043B
SCL4043BD	4043B
SCL4043BE	4043B
SCL4043BF	4043B
SCL4043BH	4043B
SCL4044ABC	4044B
SCL4044ABE	4044B
SCL4044ABF	4044B
SCL4044ABH	4044B
SCL4044B	4044B
SCL4044BC	4044B
SCL4044BD	4044B
SCL4044BE	4044B
SCL4044BF	4044B
SCL4044BH	4044B
SCL4046B	4046B
SCL4047B	4047B
SCL4049UB	4049
SCL4050	4050B
SCL4050B	4050B
SCL4051	4051B
SCL4051B	4051B
SCL4052	4052B
SCL4052B	4052B
SCL4053B	4053B
SCL4060ABC	4060B
SCL4060ABD	4060B
SCL4060ABE	4060B
SCL4060ABF	4060B
SCL4060ABH	4060B
SCL4060AC	4060B
SCL4060AD	4060B
SCL4060AE	4060B
SCL4060AF	4060B
SCL4060AH	4060B
SCL4060B	4060B
SCL4066B	4066B
SCL4068B	4068B
SCL4068BC	4068B
SCL4068BD	4068B
SCL4068BE	4068B
SCL4068BF	4068B
SCL4068BH	4068B
SCL4069UB	4069
SCL4070B	4070B
SCL4071AC	4071B
SCL4071AD	4071B
SCL4071AE	4071B
SCL4071AF	4071B
SCL4071AH	4071B
SCL4071B	4071B
SCL4071BC	4071B
SCL4071BD	4071B
SCL4071BE	4071B
SCL4071BF	4071B
SCL4071BH	4071B
SCL4072AC	4072B
SCL4072AD	4072B
SCL4072AE	4072B
SCL4072AF	4072B
SCL4072AH	4072B
SCL4072B	4072B
SCL4072BC	4072B
SCL4072BD	4072B
SCL4072BE	4072B
SCL4072BF	4072B
SCL4072BH	4072B
SCL4073AC	4073B
SCL4073AD	4073B
SCL4073AE	4073B
SCL4073AF	4073B
SCL4073AH	4073B
SCL4073B	4073B
SCL4073BC	4073B
SCL4073BD	4073B
SCL4073BE	4073B
SCL4073BF	4073B
SCL4073BH	4073B
SCL4075AC	4075B
SCL4075AD	4075B
SCL4075AE	4075B
SCL4075AF	4075B
SCL4075AH	4075B
SCL4075B	4075B
SCL4075BC	4075B
SCL4075BD	4075B
SCL4075BE	4075B
SCL4075BF	4075B
SCL4075BH	4075B
SCL4076B	4076B
SCL4077B	4077B
SCL4077BC	4077B
SCL4077BD	4077B
SCL4077BE	4077B
SCL4077BF	4077B
SCL4077BH	4077B
SCL4078B	4078B
SCL4078BC	4078B
SCL4078BD	4078B
SCL4078BE	4078B
SCL4078BF	4078B
SCL4078BH	4078B
SCL4081	4081B
SCL4081AC	4081B
SCL4081AD	4081B
SCL4081AE	4081B
SCL4081AF	4081B
SCL4081AH	4081B
SCL4081B	4081B
SCL4081BC	4081B
SCL4081BD	4081B
SCL4081BE	4081B
SCL4081BF	4081B
SCL4081BH	4081B
SCL4082B	4082B
SCL4082BC	4082B
SCL4082BD	4082B
SCL4082BE	4082B
SCL4082BF	4082B
SCL4082BH	4082B
SCL4085B	4085B
SCL4085BC	4085B
SCL4085BD	4085B
SCL4085BE	4085B
SCL4085BF	4085B
SCL4085BH	4085B
SCL4086B	4086B
SCL4086BC	4086B
SCL4086BD	4086B
SCL4086BE	4086B
SCL4086BF	4086B
SCL4086BH	4086B
SCL4093B	4093B
SCL4094B	4094B
SCL4094BC	4094B
SCL4094BD	4094B
SCL4094BE	4094B
SCL4099B	4099B
SCL4160B	40160B
SCL4160BE	40160B
SCL4192B	40192B
SCL4192BE	40192B
SCL4193B	40193B
SCL4193BE	40193B
SCL4502B	4502B
SCL4508BE	4508B
SCL4510AC	4510B
SCL4510AD	4510B
SCL4510AE	4510B
SCL4510AF	4510B
SCL4510AH	4510B
SCL4510B	4510B
SCL4510BC	4510B
SCL4510BD	4510B
SCL4510BE	4510B
SCL4510BF	4510B
SCL4510BH	4510B
SCL4511AC	4511B
SCL4511AD	4511B
SCL4511AE	4511B
SCL4511AF	4511B
SCL4511AH	4511B
SCL4511B	4511B
SCL4511BC	4511B
SCL4511BD	4511B
SCL4511BE	4511B
SCL4511BF	4511B
SCL4511BH	4511B
SCL4512B	4512B
SCL4514B	4514B
SCL4514BD	4514B
SCL4514BE	4514B
SCL4514BH	4514B
SCL4515B	4515B
SCL4515BD	4515B
SCL4515BE	4515B
SCL4515BH	4515B
SCL4516AC	4516B
SCL4516AD	4516B
SCL4516AE	4516B
SCL4516AF	4516B
SCL4516AH	4516B
SCL4516B	4516B
SCL4516BC	4516B
SCL4516BD	4516B
SCL4516BE	4516B
SCL4516BF	4516B
SCL4516BH	4516B
SCL4518	4518B
SCL4518AC	4518B
SCL4518AD	4518B
SCL4518AE	4518B
SCL4518AF	4518B
SCL4518AH	4518B
SCL4518B	4518B
SCL4518BC	4518B
SCL4518BD	4518B
SCL4518BE	4518B
SCL4518BF	4518B
SCL4518BH	4518B
SCL4520AC	4520B
SCL4520AD	4520B
SCL4520AE	4520B
SCL4520AF	4520B
SCL4520AH	4520B
SCL4520B	4520B
SCL4520BC	4520B
SCL4520BD	4520B
SCL4520BE	4520B
SCL4520BF	4520B
SCL4520BH	4520B
SCL4522B	4522B
SCL4522BC	4522B
SCL4522BD	4522B
SCL4522BE	4522B
SCL4522BF	4522B
SCL4522BH	4522B
SCL4526B	4526B
SCL4527BC	4527B
SCL4527BD	4527B
SCL4527BE	4527B
SCL4527BF	4527B
SCL4527BH	4527B
SCL4528	4528B
SCL4528B	4528B
SCL4528BE	4528B
SCL4531B	4531B
SCL4531BE	4531B
SCL4532B	4532B
SCL4532BC	4532B
SCL4532BD	4532B
SCL4532BE	4532B
SCL4543B	4543B
SCL4555B	4555B
SCL4555BC	4555B
SCL4555BD	4555B
SCL4555BE	4555B
SCL4555BF	4555B
SCL4555BH	4555B
SCL4556B	4556B
SCL4556BC	4556B
SCL4556BD	4556B
SCL4556BE	4556B
SCL4556BF	4556B
SCL4556BH	4556B
SCL4582BE	40182B
SCL4585B	4585B
SCL4585BE	4585B
SCM5101	65101
SCM90072C	2117
SCM90072L	2117
SCM90072P	2117
SCMW-10	546
SC05	116
SC05E	116
SCP5E	116
SCR01C	5481
SCR02C	5843
SCR03	5545
SCR04	5504
SCR04C	5504
SCR15	5401
SCR52(ELCOM)	5521
SCR55	5481
SCR102	5502
SCR102(ELCOM)	5522
SCR104	5444
SCR108	5402
SCR108(ELCOM)	5402
SCR118	5504
SCR118(ELCOM)	5482
SCR122(ELCOM)	5514
SCR200	5404
SCR202	5504
SCR202(ELCOM)	5524
SCR204	5444
SCR207	5504
SCR207(ELCOM)	5492
SCR208	5504
SCR208(ELCOM)	5483
SCR218	5404
SCR218(ELCOM)	5404
SCR222(ELCOM)	5514
SCR255	5541
SCR402	5507
SCR402(ELCOM)	5527
SCR404(ELCOM)	5457
SCR408	5507
SCR408(ELCOM)	5485
SCR422(ELCOM)	5515
SCR502	5501
SCR505	5486
SCR505(ELCOM)	5486
SCR508	5501
SCR508(ELCOM)	5481
SCR520	5483
SCR538	5444
SCR604(ELCOM)	5448
SCR605(ELCOM)	5513
SCR608(ELCOM)	5487
SCR613	5444
SCR635(ELCOM)	5547
SCR805(ELCOM)	231
SCR816(ELCOM)	5531
SCR2520	5543
SCR-01	5481
SCR-01-B	5481
SCR-02-C	5483
SCR-03	5501
SCR-03-C	5521
SCR-04	5504
SCR-04-C	5524
SCR-AP	123A
SCS-11C3	3046
SCT1	125
SCT2	125
SCT3	125
SCT4	125
SCT5	125
SD020	110MP
SD040	116
SD05	116
SD07	116
SD1	116
SD1-1	116
SD1-11	506
SD1-211B	116
SD1-211C	116
SD1-Z	116
SD1A	116
SD1BHF	506
SD1C	125
SD1CUF	116
SD1DM-4	116
SD1HF	116
SD1L	116
SD1LA	116
SD1P60XXXXFXT	109
SD1X	5800
SD1Y	5800
SD1Z	5802
SD1ZHF	116
SD2	125
SD2A	116
SD2B	116
SD2C	125
SD4	116
SD4(DUAL)	113A
SD5	116
SD6	116
SD6(DUAL)	5802
SD7	178MP
SD7(RECT)	125
SD8	125
SD10	116
SD12	109
SD12(PHILCO)	177
SD12B	109
SD12E	109
SD12M	109
SD13	116
SD14	109
SD15	109
SD16	109
SD18	116
SD19	614
SD20	6084
SD21A	109
SD22	506
SD23	116
SD24	614
SD27	140A
SD31	5080A
SD32	5011A
SD32(SCHOTTKY)	6084
SD33	142A
SD34	109
SD39	614
SD41	6084
SD41(MOTOROLA)	6084
SD42	5071A
SD43	177
SD45	116
SD46	109
SD46(4)	110MP
SD46-2	109
SD46R	110MP
SD49	5071A
SD51	6094
SD51(MOTOROLA)	6094
SD53	142A
SD56	109
SD60	109
SD80	116
SD82	112
SD82A	112
SD82AG	112
SD91	5800
SD91A	5802
SD91S	5802
SD92	5802
SD92A	5802
SD92S	5802
SD93	5804
SD93A	5804
SD93S	116
SD94	5804
SD94A	5804
SD94AB	116
SD94B	116
SD94S	116
SD95	116
SD95A	116
SD96	116
SD96A	116
SD96S	116
SD98	125
SD98A	125
SD98S	125
SD100	177
SD101	5804
SD101A	583
SD101B	583
SD101C	583
SD102	116
SD103	116
SD104	116
SD105	139A
SD109	123AP
SD110	177
SD111	614
SD113	614
SD113TA	614
SD115	612
SD115(SCHOTTKY)	585
SD116	611
SD120	585
SD130	585
SD140	585
SD141	175
SD165	177
SD201	116
SD202	116
SD241	6090
SD282A	112
SD315	586
SD320	586
SD330	586
SD340	586
SD345	152
SD445	153
SD461	109
SD470	116
SD500	177
SD500C	116
SD501	116
SD600	177
SD600C	116
SD630	177
SD632	139A
SD632(10)	139A
SD701-02	177
SD800	125
SD838	112
SD910	125
SD910A	125
SD910S	125
SD950	116
SD974	177
SD1005	76
SD1005M	76
SD1006	77
SD1014	337
SD1014-6R	350F
SD1018	320
SD1018-6	320F
SD1020	473
SD1023	186
SD1064	473
SD1065-IM	473
SD1069	350
SD1074	318
SD1076	317
SD1087	365
SD1088	366
SD1089	367
SD1089A	367
SD1098	484
SD1101	116
SD1102	116
SD1103	116
SD1104	116
SD1124	352
SD1131	361
SD1133	350
SD1134	362
SD1135	363
SD1136	364
SD1143	350
SD1144	362
SD1145	363
SD1146	364
SD1167	337
SD1168	338
SD1169	339
SD1212	78
SD1212-7	78
SD1214	79
SD1214-6	79
SD1224	360
SD1229-1	350F
SD1244	359
SD1244-6	359
SD1272	345
SD1272-2	345
SD1281	353
SD1285	338F
SD1288	336
SD1289	333
SD1290	339
SD1300	161
SD1345	152
SD1410	481
SD1412	483
SD1416	352
SD1418	482
SD1421	485
SD1428	477
SD1429	365
SD1433	364
SD1434	367
SD1445	153
SD1477	352
SD1487	470
SD1488	480
SD3443	3031
SD3443-002	3031
SD5400-1	3032
SD5400-2	3036
SD5400-3	3036
SD5440-2	3032
SD-0033	5071A
SD-02	116
SD-1	506
SD-1(BOOST)	506
SD-1-30DA	506
SD-1-211B	116
SD-1-211C	116
SD-1A	116
SD-1A4F	506
SD-1AHF	507
SD-1AUF	177
SD-1B	125
SD-1B(HF)	506
SD-1BHF	506
SD-1C	506
SD-1C-4F	116
SD-1C-UF	116
SD-1CUF	116
SD-1HF	116
SD-1K188FM	109
SD-1L	116
SD-1LA	116
SD-1N60	109
SD-1N60P	110MP
SD-1N60S	109
SD-1N4148	519
SD-1S1555	177
SD-1U	116
SD-1UF	116
SD-1VHF	506
SD-1X	116
SD-1Y	116
SD-1Z	506
SD-2	116
SD-5	177
SD-5(PHILCO)	177
SD-6	135A
SD-6AUF	125
SD-7	178MP
SD-7(PHILCO)	177
SD-8	139A
SD-8(PHILCO)	139A
SD-8(RECT)	5808
SD-8(ZENER)	5072A
SD-11	5077A
SD-12	109
SD-13	116
SD-13(PHILCO)	109
SD-14	109
SD-15	139A
SD-16	109
SD-16A	116
SD-16D	116
SD-18	116
SD-19	166
SD-22	506
SD-24	614
SD-27	139A
SD-31	5079A
SD-32	136A
SD-33	142A
SD-34	177
SD-39	614
SD-41(TRW)	6084
SD-43	177
SD-46	109
SD-46-2	109
SD-49	5071A
SD-51	112
SD-51(TRW)	6094
SD-56	109
SD-60	109
SD-80	116
SD-82A	112
SD-91	116
SD-91A	116
SD-91S	116
SD-92	116
SD-92A	116
SD-92S	116
SD-93	116
SD-93A	116
SD-94	116
SD-94A	116
SD-94AB	116
SD-95	116
SD-95A	116
SD-101	116
SD-109	123AP
SD-110	177
SD-115	612
SD-116	612
SD-150	109
SD-201	116
SD-404	112
SD-470	116
SD-630	177
SD-632	139A
SD-5400-2	3036
SD-5400-3	3036
SD-CDG00	177
SD-CDG24	177
SD-ERB24-04D	506
SD-ERB26-20	525
SD-ERC26-13	506
SD-FV1043	610
SD-HV23GBL	600
SD-W04	167
SD-Y	116
SDA345	152
SDA445	153
SDA4041	4041
SDB345	152
SDB445	153
SDD4	113A
SDD6	115
SDD420	128
SDD421	123AP
SDD820	107
SDD821	123AP
SDD1220	128
SDD3000	123AP
SDD-C10	113A
SDDS135XEXXXX	116
SDDS442XXXXXX	519
SDDSF10XCXXX-XT	116
SDDSF10XCXXXT	116
SDGMA01XXXXXT	519
SDGZA033XXXXX	5005A
SDGZA056YXXX-XX	5011A
SDGZA062YXXXX	5013A
SDGZA100ZXXXX	5019A
SDH-2	109
SDH-2HC	112
SDI345	152
SDI445	153
SDJ345	152
SDJ445	153
SDK345	152
SDK445	153
SDL345	152
SDL445	153
SDM345	152
SDM445	153
SDN345	152
SDN445	153
SDN75492BN	75492B
SDR25	116
SDR-25	116
SDS113	116
SDS240	161
SDS420	161
SDS-113	116
SDT402	283
SDT410	94
SDT411	94
SDT423	162
SDT430	283
SDT431	162
SDT445	153
SDT1000	283
SDT1001	283
SDT1002	283
SDT1003	283
SDT1004	283
SDT1005	283
SDT1011	283
SDT1012	283
SDT1013	283
SDT1014	283
SDT1015	283
SDT1611	163A
SDT1612	163A
SDT1613	163A
SDT1614	163A
SDT1615	163A
SDT1616	163A
SDT1617	163A
SDT1618	163A
SDT1621	181
SDT1622	181
SDT1623	181
SDT1631	181
SDT1632	181
SDT1633	181
SDT3321	129
SDT3322	129
SDT3325	187
SDT3326	186
SDT3421	186
SDT3422	152
SDT3425	186
SDT3426	186
SDT3501	323
SDT3502	323
SDT3503	323
SDT3504	323
SDT3505	323
SDT3506	323
SDT3507	323
SDT3508	323
SDT3509	153
SDT3510	218
SDT3511	218
SDT3512	218
SDT3513	218
SDT3514	218
SDT3515	218
SDT3516	218
SDT3550	323
SDT3551	323
SDT3552	323
SDT3553	323
SDT3554	323
SDT3575	218
SDT3576	218
SDT3577	218
SDT3578	218
SDT3579	218
SDT3701	218
SDT3702	153
SDT3703	153
SDT3704	153
SDT3706	153
SDT3707	153
SDT3708	153
SDT3709	153
SDT3710	153
SDT3711	153

PART NUMBER	NTE REPLACEMENT
SDT3712	153
SDT3713	153
SDT3715	153
SDT3716	153
SDT3717	153
SDT3720	153
SDT3721	153
SDT3722	153
SDT3725	153
SDT3726	153
SDT3727	153
SDT3729	153
SDT3730	153
SDT3733	153
SDT3760	180
SDT3764	180
SDT3765	180
SDT3766	180
SDT3775	187
SDT3776	187
SDT3778	187
SDT3826	180
SDT3827	180
SDT3875	180
SDT3876	180
SDT3877	180
SDT4301	186
SDT4302	186
SDT4304	186
SDT4305	186
SDT4307	186
SDT4308	186
SDT4310	186
SDT4311	186
SDT4455	186
SDT4483	186
SDT4551	186
SDT4553	186
SDT4583	186
SDT4611	186
SDT4612	186
SDT4614	186
SDT4615	186
SDT5001	186
SDT5006	186
SDT5011	186
SDT5101	152
SDT5102	152
SDT5103	196
SDT5111	153
SDT5112	153
SDT5113	197
SDT5501	186
SDT5506	186
SDT5511	186
SDT5901	175
SDT5902	175
SDT5903	175
SDT5904	175
SDT5905	175
SDT5906	175
SDT5907	175
SDT5908	175
SDT5909	175
SDT5910	175
SDT5911	175
SDT5912	175
SDT5913	175
SDT5914	175
SDT6001	152
SDT6011	152
SDT6013	152
SDT6031	152
SDT6101	186
SDT6102	186
SDT6103	152
SDT6104	186
SDT6105	186
SDT6106	186
SDT6901	175
SDT6905	175
SDT7011	73
SDT7012	73
SDT7013	73
SDT7014	73
SDT7015	73
SDT7016	73
SDT7140	73
SDT7141	73
SDT7150	73
SDT7151	73
SDT7152	73
SDT7154	73
SDT7155	73
SDT7401	186
SDT7402	152
SDT7411	186
SDT7412	152
SDT7414	186
SDT7415	152
SDT7511	152
SDT7512	152
SDT7514	152
SDT7515	152
SDT8002	71
SDT8003	71
SDT8012	71
SDT8013	71
SDT8015	71
SDT8016	71
SDT8045	71
SDT8070	71
SDT8071	71
SDT8301	70
SDT8302	70
SDT8303	70
SDT8304	70
SDT9001	186
SDT9002	186
SDT9003	186
SDT9004	187
SDT9005	186
SDT9006	186
SDT9007	186
SDT9008	186
SDT9009	152
SDT9201	130
SDT9202	180
SDT9205	130
SDT9206	130
SDT9207	180
SDT9210	130
SDT9261	130
SDT9303	181
SDT9306	181
SDT9309	181
SDT9701	180
SDT9704	180
SDT9707	180
SDT9901	162
SDT9902	162
SDT9903	162
SDT9904	162
SDT-410	162
SDT-411	163A
SDT-413	163A
SDT-423	163A
SDT-430	163A
SDT-445	153
SDT-3048	121
SDTK0080	1322
SE0001	229
SE002(1)	107
SE0	125
SE0S-01	116
SE05	116
SE05A	5804
SE05B	116
SE05C	125
SE05D	116
SE05S	116
SE05SS	116
SE5-0250	161
SE5-0370	159
SE5-0608	123AP
SE5-0909	234
SE5-0127	199
SE5-0128	123AP
SE5-0247-C	519
SE5-0249	161
SE5-0253	123AP
SE5-0274	123AP
SE5-0366	194
SE5-0367	123AP
SE5-0399	127
SE5-0452	128
SE5-0456	519
SE5-0565	199
SE5-0567	123AP
SE5-0569	199
SE5-0745	194
SE5-0798	159
SE5-0831	159
SE5-0848	123AP
SE5-0854	123AP
SE5-0855	123AP
SE5-0887	123AP
SE5-0888	123AP
SE5-0938	199
SE5-0938-54	123AP
SE5-0938-55	199
SE5-0938-56	199
SE5-0938-57	199
SE5-0949	159
SE5-0958	128
SE5-0963	152
SE5-0964	153
SE5-0966	177
SE5-0996	133
SE5-1057	159
SE5-1223	159
SE6	116
SE15B	156
SE15C	156
SE15D	156
SE30B26A	116
SE46	116
SE50	229
SE500G	108
SE504	108
SE521	108
SE567	832
SE1001	229
SE1001-1	229
SE1001-2	229
SE1002	161
SE1002-1	161
SE1002-2	161
SE1010	161
SE1012	192
SE1019	108
SE1044	108
SE1331	123AP
SE1419	108
SE1510	3052
SE1511	3056
SE1730	125
SE2001	161
SE2002	161
SE2020	107
SE2397	107
SE2400	160
SE2401	123AP
SE2402	123AP
SE3001	108-1
SE3001R	108-1
SE3001Y	108-1
SE3002	108-1
SE3003	108-1
SE3005	108-1
SE3019	161
SE3030	162
SE3031	162
SE3032	130
SE3033	130
SE3034	224
SE3035	130
SE3036	130
SE3040	175
SE3041	175
SE3646	161
SE3819	133
SE4001	123A
SE4002	123AP
SE4010	123AP
SE4020	161
SE4020/6-04	161
SE4021	161
SE4022	161
SE4172	123AP
SE4558	778A
SE5001	161
SE5002	161
SE5003	161
SE5004	161
SE5006	108
SE5010	108
SE5015	108
SE5020	161
SE5021	161
SE5022	161
SE5023	161
SE5024	161
SE5025	161
SE5029	108
SE5030	108
SE5030A	123AP
SE5030B	123AP
SE5031	108
SE5032	161
SE5035	108
SE5036	108
SE5040	108
SE5050	161
SE5051	161
SE5052	161
SE5055	319P
SE5056	108
SE5151	123AP
SE5315	222
SE5450	3028
SE6001	128
SE6002	161
SE6006	128
SE6010	123AP
SE6020	128
SE6020A	128
SE6021	128
SE6021A	128
SE6022	128
SE6023	128
SE7001	154
SE7002	154
SE7005	128
SE7006	124
SE7010	154
SE7015	128
SE7016	154
SE7017	154
SE7020	124
SE7030	124
SE7050	154
SE7054	154
SE7055	154
SE7056	154
SE7057	154
SE8001	128
SE8002	128
SE8010	128
SE8012	128
SE8040	123AP
SE8041	128
SE8042	128
SE8510	128
SE8520	128
SE8521	128
SE8540	129
SE8541	129
SE8542	129
SE9002	130
SE9020	162
SE9060	175
SE9061	175
SE9062	175
SE9063	175
SE9080	130
SE9300	263
SE9301	263
SE9302	263
SE9400	264
SE9401	264
SE9402	264
SE9560	218
SE9561	218
SE9562	218
SE9563	218
SE9570	185
SE9571	185
SE9572	185
SE9573	185
SE40022	121
SE50399	127
SE-0.5A	5804
SE-0.5B	116
SE-05	116
SE-05-01	116
SE-05-02	116
SE-05-2	117
SE-05A	116
SE-05C	156
SE-05X	116
SE-0566	123AP
SE-1.5A	156
SE-2	116
SE-5	116
SE-5-0399	127
SE-5-0819	102
SE-705G	124
SE-1001	229
SE-1002	123AP
SE-1010	107
SE-1019	108
SE-1044	108
SE-1331	123AP
SE-1419	108
SE-2001	123AP
SE-3001	108-1
SE-3002	108-1
SE-3003	108-1
SE-3005	108-1
SE-3019	108
SE-3033	130
SE-3034	224
SE-3646	123AP
SE-4001	123AP
SE-4002	123AP
SE-4010	123AP
SE-4020	128
SE-5001	108
SE-5002	108
SE-5003	108
SE-5006	123AP
SE-5006-14	108
SE-5020	108
SE-5021	108
SE-5023	161
SE-5024	161
SE-5025	161
SE-5050	108
SE-5450-1	3028
SE-5450-2	3028
SE-5451-1	3028
SE-5451-2	3028
SE-5451-3	3028
SE-6001	123AP
SE-6002	123AP
SE-7001	103A
SE-8001	128
SE-8010	128
SE-40022	121
SE=-5450-3	3028
SEC1078	192
SEC1079	192
SEC1477	192
SEC1479	192
SEL1120R	3166
SEL1320G	3167
SELEN-26	113A
SELEN-38	113A
SELEN-40	505
SELEN-42	120
SELEN-44	166
SELEN-52	503
SELEN-64	156
SELEN-70	116
SELEN-92	506
SELEN-701	116
SEN2A1	166
SEN2A2	167
SEN2A4	168
SEN2A6	169
SEN2A8	170
SEN2A10	170
SES632	130
SES881	130
SES3819	132
SF0R1A41	5402
SF0R3G42	5405
SF0R3G42(G5H1)	5405
SF0R3G42-1G5	5405
SF0R3642(G5H1)	5405
SF1	125
SF1A11	5412
SF1A11A	5412
SF1B11	5413
SF1B11A	5413
SF1CN1	125
SF1D11	5414
SF1D11A	5414
SF1R3D41	5455
SF1R-3B41	5444
SF2B41	5454
SF2D41	5455
SF2G41	5457
SF2K212XXXEXX	451
SF3B12	5471
SF3B14	5511
SF3B41	5462
SF3CN1	125
SF3D12	5472
SF3D14	5512
SF3D41	5463
SF3G12	5475
SF3G14	5513
SF3G41	5465
SF3J41	5466
SF4	125
SF4CN1	125
SF5	125
SF5B11	5482
SF5B13	5482
SF5B41	5462
SF5D11	5483
SF5D13	5483
SF5D41	5463
SF5F11	5484
SF5F13	5484
SF5G11	5485
SF5G13	5485
SF5G41	5465
SF5J11	5487
SF5J13	5487
SF5J41	5466
SF6	125
SF8B41	5462
SF8D41	5463
SF8G41	5465
SF8J41	5466
SF10B11	5502
SF10B13	5502
SF10D11	5504
SF10D13	5504
SF10F11	5506
SF10F13	5506
SF10G11	5507
SF10G13	5507
SF10J11	5529
SF10J13	5509
SF10L11	5531
SF11	587
SF12	587
SF13	587
SF14	587
SF16B11	5542
SF16B14	5552
SF16D11	5543
SF16D14	5552
SF16F11	5544
SF16G11	5545
SF16G14	5554
SF16J11	5547
SF21	588
SF22	588
SF23	588
SF24	588
SF31	588
SF32	588
SF33	588
SF34	588
SF81	597
SF82	597
SF83	597
SF84	597
SF115	229
SF115A	229
SF115B	229
SF115C	229
SF115D	229
SF115E	229
SF161	6240
SF161C	6240
SF162	6240
SF162C	6240
SF163	6240
SF163C	6240
SF164	6240
SF164C	6240
SF167	161
SF173	161
SF194	161
SF194B	161
SF195	161
SF195C	161
SF195D	161
SF196	161
SF197	161
SF294	161
SF294B	161
SF295	161
SF295C	161
SF295D	161
SF301	6246
SF301C	6246
SF302	6246
SF302C	6246
SF303	6246
SF303C	6246
SF304	6246
SF304C	6246
SF310	161
SF314	161
SF334	161
SF334B	161
SF335	161
SF335C	161
SF335D	161
SF703SF	230
SF1001	123AP
SF1001(RECT)	587
SF1002	587
SF1003	587
SF1004	587
SF1401	597
SF1402	597
SF1403	597
SF1404	597
SF1713	123AP
SF1714	123AP
SF1726	123AP
SF1730	123AP
SF2001	599
SF2002	599
SF2003	599
SF2004	599
SF2401A	6244
SF2402A	6244
SF2402CT	6240
SF2403A	6244
SF2403AQ	6244
SF2403CT	6240
SF2404A	6244
SF2404CT	6240
SF3302P	6246
SF3303P	6246
SF3304P	6246
SF3403A	6244
SF8014	159
SF.T124	158
SF.T130	158
SF.T131P	158
SF.T163	160
SF.T171	100
SF.T172	100
SF.T173	100
SF.T174	100
SF.T184	101
SF.T187	171
SF.T191	104
SF.T212	127
SF.T213	127
SF.T214	127
SF.T221	158
SF.T222	102
SF.T223	158
SF.T227	102
SF.T237	102A
SF.T238	127
SF.T239	127
SF.T240	127
SF.T250	127
SF.T251	102A
SF.T252	102A
SF.T253	102A
SF.T264	105
SF.T306	102A
SF.T316	160
SF.T317	160
SF.T318	102
SF.T319	160
SF.T320	160
SF.T321	158
SF.T322	158
SF.T337	102A
SF.T351	158
SF.T352	158
SF.T353	176
SF.T354	160
SF.T357	160
SF.T358	160
SF.T377	103A
SF.T440	192
SF.T443	192
SF.T443A	192
SF.T445	192
SF.T714	192
SF-1	506
SFB6183	116
SFB8970	222
SFC400E	7400
SFC401E	7401
SFC402E	7402
SFC403	7403
SFC408E	7408
SFC409E	7409
SFC410E	7410
SFC420E	7420
SFC426E	7426
SFC430E	7430
SFC437E	7437
SFC438E	7438
SFC440E	7440
SFC442E	7442
SFC450E	7450
SFC451E	7451
SFC453E	7453
SFC454E	7454
SFC460E	7460
SFC472E	7472
SFC473E	7473
SFC474E	7474
SFC475E	7475
SFC476E	7476
SFC485E	7485
SFC486E	7486
SFC492E	7492
SFC2109RM	931
SFC2209R	931
SFC2301ADC	975
SFC2309R	931
SFC2741C	941
SFC2805EC	960
SFC2812RC	933
SFC3301P	6246
SFC3302P	6246
SFC3303P	6246
SFC3304P	6246
SFC4107E	74107
SFC4121E	74121
SFC4122E	74122
SFC4123E	74123
SFC4141E	74141
SFC4154E	74154
SFC4155E	74155
SFC4156E	74156
SFC4180E	74180
SFC4181E	74181
SFC4192E	74192
SFC4193E	74193
SFC6032	723
SFC8999	222
SFC-1616	222
SFC-1617	222
SFD	109
SFD43	177
SFD83	177
SFD107	109
SFD111	109
SFD112	109
SFD182	519
SFD184	109
SFD2285	222
SFD-23	129
SFD-182	519
SFE145	133
SFE253	222
SFE303	221
SFE425	222
SFE427	222
SFE303424	222
SFIR3B41	5454
SFIR3D41	5455
SFOR1A41	5402
SFOR1B41	5402
SFOR1B42	5402
SFOR1B42(GAK)	5402
SFOR1B42(IG1)	5402
SFOR1D42(GAK)	5404
SFOR1G42(GAK)	5405
SFOR2B41	5402
SFOR2D41	5404
SFOR3B42(GAK)	5402
SFOR3D42(GAK)	5404
SFOR3G42	5405
SFOR3G42(GAK)	5405
SFOR3G42-1G5	5405
SFOR3J42(GAK)	5406
SFR135	116
SFR151	116
SFR152	116
SFR153	116
SFR154	116
SFR155	116
SFR156	116
SFR164	116
SFR251	116
SFR252	116
SFR253	116
SFR254	116
SFR255	116
SFR256	116
SFR258	125
SFR264	116
SFR266	116
SFR268	125
SFT104	109
SFT108	109
SFT120	160
SFT121	158
SFT122	158
SFT123	158
SFT124	158
SFT125	158
SFT125P	158
SFT130	158
SFT131	158
SFT131P	158
SFT143	158
SFT144	158
SFT145	158
SFT146	158
SFT151	102A
SFT152	102A
SFT162	160
SFT163	160
SFT171	160
SFT172	160
SFT173	160
SFT174	160
SFT184	101
SFT186	154
SFT187	154
SFT190	121
SFT191	121
SFT192	121
SFT212	121
SFT213	121
SFT214	121
SFT221	102
SFT221A	102A
SFT222	102
SFT222A	102A
SFT223	100
SFT226	100
SFT227	100
SFT228	100
SFT229	100
SFT232	102A
SFT237	100

PART NUMBER	NTE REPLACEMENT
SFT238	121
SFT239	121
SFT240	121
SFT241	158
SFT242	158
SFT243	158
SFT250	121
SFT251	100
SFT252	100
SFT253	100
SFT259	101
SFT260	101
SFT261	101
SFT264	105
SFT265	105
SFT266	105
SFT267	105
SFT268	160
SFT288	100
SFT298	101
SFT306	102A
SFT307	126
SFT308	126
SFT315	160
SFT316	160
SFT317	126
SFT318	126
SFT319	126
SFT320	126
SFT321	102A
SFT322	102A
SFT323	102A
SFT325	158
SFT327	102A
SFT337	102
SFT337B	102A
SFT337V	102A
SFT351	102A
SFT352	102A
SFT353	102A
SFT354	126
SFT357	126
SFT357P	126
SFT358	160
SFT367	158
SFT377	103A
SFT440	128
SFT443	128
SFT443A	128
SFT445	128
SFT523	158
SFT526	102A
SFT713	123AP
SFT714	123AP
SFT-163	160
SFT-184	103A
SFT-265	105
SFT-266	105
SFT-267	105
SFT-298	101
SFT-306	102A
SFT-307	100
SFT-315	126
SFT-316	126
SFT-317	126
SFT-319	100
SFT-320	126
SFT-322	102A
SFT-323	102A
SFT-327	102A
SFT-337	102A
SFT-352	102A
SFT-353	102A
SFT-357	126
SFT-358	160
SFZ708	136A
SFZ716	142A
SG005	5804
SG2-04B	3007
SG2-05B	3010
SG2-07B	3016
SG105	116
SG203D	3024
SG205	5802
SG205D	3010
SG206D	3003
SG264A	276
SG305	5804
SG317K	970
SG320-05K	1913
SG320-12K	1915
SG320-15K	1919
SG320-18K	1923
SG320-24K	1925
SG323	116
SG323K	931
SG337K	1911
SG340-05K	931
SG340-12K	933
SG340K-12	1914
SG340K-15	1916
SG340K-18	1920
SG353-05K	931
SG353K-12	933
SG505	116
SG608	276
SG608AA	276
SG613	276
SG613-1	276
SG613-2	276
SG613-3	276
SG709CN	909D
SG709CT	909
SG710CD	910D
SG710CN	910D
SG710CT	910
SG711CT	911
SG723CD	923D
SG723CN	923D
SG723CT	923
SG733CJ	927D
SG733CT	927D
SG741CD	941D
SG741CM	941M
SG741CN	941D
SG741CT	941
SG747CT	947
SG805	5808
SG1198	116
SG1426	5457
SG1488	75188
SG1488J	75188
SG1488N	75188
SG2001	2011
SG2001N	2011
SG2002N	2012
SG2003	2013
SG2003N	2013
SG2004	2014
SG2004N	2014
SG2005	2015
SG2066	2086
SG2067	2086
SG2070	2088
SG2071	2088
SG2182(NPN)	103A
SG2182(PNP)	102A
SG2183(NPN)	103A
SG2183(PNP)	102A
SG3081J	916
SG3081N	916
SG3082N	2023
SG3182	177
SG3183	177
SG3198	177
SG3254	1720
SG3400	116
SG3432	177
SG3516	177
SG3524	1720
SG3524N	1720
SG3525	1721
SG3525A	1721
SG3526	1722
SG3526A	1722
SG3526AN	1722
SG3526N	1722
SG3527	1723
SG3527A	1723
SG3527AN	1723
SG3583	177
SG5013	128
SG5028	177
SG5392	177
SG5400	177
SG7805CK	931
SG7812	966
SG7812CK	1914
SG7812K	1914
SG7815CK	1916
SG7815K	1916
SG7818CK	1920
SG7818K	1920
SG7824CK	1924
SG7905CK	1913
SG7912CK	1915
SG7915CK	1919
SG7918CK	1923
SG7918K	1923
SG7924CK	1925
SG9150	519
SG9200	519
SG9210	177
SG15401C	6240
SG15402C	6240
SG-005	116
SG-5N	156
SG-5P	156
SG-105	116
SG-205	116
SG-264A	276
SG-305	116
SG-613	276
SG-805	116
SG-1198	116
SG-9150	177
SGB-9742	108
SGC7202	128
SGC-7202	123AP
SGI5001	588
SGI5002	588
SGI5003	588
SGI5004	588
SGR100	116
SGS10004P	256
SGS10005P	256
SGS87231	161
SH1	116
SH1A	116
SH1B	125
SH1C	125
SH1S	5802
SH4D05	116
SH4D1	116
SH4D2	116
SH4D3	116
SH4D4	116
SH4D6	116
SH4D8	125
SH15	116
SH16B11	5682
SH16D11	5683
SH16F11	5684
SH16G11	5685
SH16H11	5686
SH16J11	5697
SH323KC	931
SH323SC	931
SH1064	123AP
SH-1	116
SH-1A	116
SH-1B	116
SH-1DE	116
SH-1S	116
SHA7520	193
SHA7521	193
SHA7522	193
SHA7523	193
SHA7524	193
SHA7526	193
SHA7527	193
SHA7528	193
SHA7530	159
SHA7531	159
SHA7532	159
SHA7533	159
SHA7534	159
SHA7535	288
SHA7536	159
SHA7537	159
SHA7538	159
SHA7539	288
SHA7597	193
SHA7598	193
SHA7599	193
SHAD1	116
SHAD-1	116
SI05	5800
SI05A	5800
SI1	5801
SI1A	5802
SI1SS54	519
SI5	5806
SI8A	156
SI10	5809
SI10A	156
SI50E	116
SI91G	116
SI100E	116
SI341P	106
SI342P	106
SI343P	106
SI351P	106
SI352P	106
SI353P	106
SI1000E	125
SI3052	1934
SI3052P	1934
SI3052V	1934X
SI3122	1936
SI3122P	1936
SI3152	1938
SI3152P	1938
SI3242	1940
SI3242P	1940
SI7115B	1848
SI15403C	6240
SI15404C	6240
SI-05A	125
SI-1A	125
SI-2A	125
SI-3A	125
SI-4A	125
SI-5A	125
SI-6A	125
SI-7A	125
SI-8A	125
SI-10A	125
SI-41	6084
SI-51	6094
SI-154	552
SI-600	169
SI-1002	552
SI-1006	552
SI-1014	552
SI-1019	525
SI-1020	558
SI-1021	552
SI-3052V	1934X
SI-3122P	1936
SI-4102	1871
SI-CA3064E	783
SI-CA3065E	712
SI-LM3065N	712
SI-MC1352P	749
SI-MC1358P	712
SI-MC1364P	783
SI-REC-73	116
SI-RECT102	116
SI-RECT-044	116
SI-RECT-2	116
SI-RECT-20	116
SI-RECT-23	614
SI-RECT-25	116
SI-RECT-27	116
SI-RECT-33	116
SI-RECT-34	116
SI-RECT-35	177
SI-RECT-36	506
SI-RECT-37	116
SI-RECT-39	116
SI-RECT-44	506
SI-RECT-48	116
SI-RECT-49	116
SI-RECT-53	116
SI-RECT-59	116
SI-RECT-69	116
SI-RECT-73	116
SI-RECT-74	116
SI-RECT-75	116
SI-RECT-77	116
SI-RECT-84	116
SI-RECT-92	116
SI-RECT-94	116
SI-RECT-98	174
SI-RECT-100	116
SI-RECT-100-102	116
SI-RECT-102	116
SI-RECT-102A	125
SI-RECT-110	156
SI-RECT-110/SB-3F	116
SI-RECT-112	156
SI-RECT-112/SB-3	156
SI-RECT-114	506
SI-RECT-122	116
SI-RECT-124	506
SI-RECT-126	116
SI-RECT-136	125
SI-RECT-140	137A
SI-RECT-140/TR6S	5070A
SI-RECT-140/TR-6	137A
SI-RECT-144	116
SI-RECT-152	177
SI-RECT-154	116
SI-RECT-155	116
SI-RECT-156	116
SI-RECT-158	506
SI-RECT-162	506
SI-RECT-168	5010A
SI-RECT-170	506
SI-RECT-174	113A
SI-RECT-178BF	113A
SI-RECT-180	506
SI-RECT-182	506
SI-RECT-204	125
SI-RECT-206	506
SI-RECT-208	156
SI-RECT-218	116
SI-RECT-220	116
SI-RECT-222	116
SI-RECT-224	506
SI-RECT-226	116
SI-RECT-228	142A
SI-RECT-230	142A
SI-SN76650N	749
SI-TA7074P	749
SI-TA7075P	1080
SI-UPC574J	615P
SI-UPC1031H	1245
SIB020-1B	166
SIB0101	552
SIB0102	116
SIB0201CR	116
SIB0-1	506
SIB0L	116
SIB0L-02	116
SIB01	506
SIB01-01	552
SIB01-02	116
SIB01-02T5	116
SIB01-02TP1	116
SIB01-02VI	116
SIB01-04	5806
SIB01-04VI	5806
SIB01-06	125
SIB01-06B	116
SIB02-03C	116
SIB02-03CR	116
SIB02-CR	116
SIB02-CR1	178MP
SIB07-07	157
SIB1	116
SIB50B794-1	166
SIB-0306	125
SIB-01-02	116
SIB-01-022	116
SIB-C1-02	177
SIC122C	5465
SIC122D	5465
SIC122E	5466
SIC122M	5466
SIC122N	5468
SIC-122C	5465
SID01E	116
SID01K	125
SID01L	116
SID02E	116
SID02K	125
SID02L	116
SID2A-1	113A
SID2A-3	113A
SID23-13	506
SID23-15	506
SID30-13	506
SID30-15	551
SID30-132	506
SID50B851	177
SID50B851A	177
SID50C052-16	156(4)
SID51C052-12	156
SID51C052-18	156
SID51C052-19	156
SID51C169	116
SID51C169-1	156(4)
SID51C169-2	156
SID3015	551
SID50894	177
SID50894-3	156(4)
SID(SCR)	5405
SIDA0.5K	5806
SIDA0.5N	5808
SIDA0.5P	5809
SIDA05K	156
SIDA05N	156
SIDA05P	156
SIF4	552
SIF14A-P	116
SIG1/100	5802
SIG1/200	5802
SIG1/400	116
SIG1/600	116
SIG1/800	5808
SIGCJ-1	506
SIK40	552
SIL200	116
SIL4511	4511B
SIL-200	116
SILC4001BXXXX	4001B
SILC4069UBXXX	4069
SILM8560BXXXX	2062
SIPT030	56022
SIPT030A	56022
SIPT030AB	56022
SIPT030B	56022
SIPT030BC	56022
SIPT030C	56022
SIPT040	56022
SIPT040A	56022
SIPT040B	56022
SIPT040BC	56022
SIPT040C	56022
SIPT025A	56022
SIPT025AB	56022
SIPT025B	56022
SIPT025C	56022
SIPT0225BC	56022
SIPT125	56022
SIPT125A	56022
SIPT125AB	56022
SIPT125B	56022
SIPT125BC	56022
SIPT130A	56022
SIPT130AB	56022
SIPT130B	56022
SIPT130BC	56022
SIPT130C	56022
SIPT140A	56022
SIPT140AB	56022
SIPT140B	56022
SIPT140BC	56022
SIPT140C	56022
SIPT225	56022
SIPT225A	56022
SIPT225AB	56022
SIPT225B	56022
SIPT225BC	56022
SIPT225C	56022
SIPT230	56022
SIPT230A	56022
SIPT230AB	56022
SIPT230B	56022
SIPT230BC	56022
SIPT230C	56022
SIPT240	56022
SIPT240A	56022
SIPT240AB	56022
SIPT240B	56022
SIPT240BC	56022
SIPT240C	56022
SIPT325	56024
SIPT325A	56024
SIPT325AB	56024
SIPT325B	56024
SIPT325BC	56024
SIPT325C	56024
SIPT330	56024
SIPT330A	56024
SIPT330AB	56024
SIPT330B	56024
SIPT330BC	56024
SIPT330C	56024
SIPT340A	56024
SIPT340AB	56024
SIPT340B	56024
SIPT340BC	56024
SIPT340C	56024
SIPT425	56024
SIPT425A	56024
SIPT425AB	56024
SIPT425B	56024
SIPT425C	56024
SIPT426BC	56024
SIPT430	56024
SIPT430A	56024
SIPT430AB	56024
SIPT430B	56024
SIPT430BC	56024
SIPT430C	56024
SIPT440	56024
SIPT440A	56024
SIPT440AB	56024
SIPT440B	56024
SIPT440BC	56024
SIPT440C	56024
SIPT525	56026
SIPT525A	56026
SIPT525AB	56026
SIPT525B	56026
SIPT525BC	56026
SIPT530A	56026
SIPT530AB	56026
SIPT530B	56026
SIPT530BC	56026
SIPT530C	56026
SIPT540	56026
SIPT540A	56026
SIPT540B	56026
SIPT540BC	56026
SIPT540C	56026
SIPT625	56026
SIPT625A	56026
SIPT625AB	56026
SIPT625B	56026
SIPT625BC	56026
SIPT625C	56026
SIPT630	56026
SIPT630A	56026
SIPT630AB	56026
SIPT630B	56026
SIPT630BC	56026
SIPT630C	56026
SIPT640	56026
SIPT640A	56026
SIPT640AB	56026
SIPT640B	56026
SIPT640BC	56026
SIPT640C	56026
SIR20	116
SIR60	116
SIR80	552
SIR-80	116
SIR-RECT-44	116
SIRB10	156
SIRB-10	166
SIRBA00	5304
SIRBA10	5304
SIRECT-2	116
SIRECT-36	116
SIRECT-48	116
SIRECT-59	116
SIRECT-92	116
SIRECT-102	116
SIRM-2C	125
SIS2	109
SIS3M	585
SIS4M	552
SIS11	109
SIS20	109
SISC141C	5634
SISC141D	5635
SISC141E	5636
SISC141M	5637
SISC143C	5634
SISC143D	5635
SISC143E	5636
SISC143M	5637
SISC146C	5634
SISC146D	5635
SISC146E	5636
SISC146M	5637
SISD-K	116
SISD-1	506
SISD-1HF	125
SISD-1X	116
SISM-150-01	116
SISW-0502	116
SISW-05-02	116
SIT20H	552
SIT51B096-9	177
SITVR-06G	552
SIVB10S	166
SIWB(A)10	5332
SJ051A	5940
SJ051E	116
SJ051F	116
SJ052A	5940
SJ052E	116
SJ052F	116
SJ053E	5940
SJ053EK	5870
SJ053F	5800
SJ053K	5940
SJ054E	5940
SJ054EK	5870
SJ054K	5940
SJ60F	116
SJ101A	5942
SJ101F	116
SJ102A	5942
SJ102F	116
SJ103E	5942
SJ103EK	5872
SJ103F	5801
SJ103K	5942
SJ104E	5942
SJ104EK	5872
SJ104K	5942
SJ130	124
SJ201A	5942
SJ201F	116
SJ202A	5942
SJ202F	116
SJ203E	5942
SJ203EK	5874
SJ203F	5802
SJ203K	5942
SJ204E	5942
SJ204EK	5874
SJ204K	5942
SJ285	185
SJ301F	116
SJ302F	116
SJ304EK	5878
SJ401F	116
SJ402F	116
SJ403F	5804
SJ404EK	5878
SJ501F	116
SJ570	123AP
SJ601F	116
SJ603	5882
SJ603E	5882
SJ603EK	5882
SJ603F	5806
SJ603K	5882
SJ604	5882
SJ604E	5882
SJ604EK	5882
SJ604K	5882
SJ619	130
SJ619-1	130
SJ652	218
SJ803F	5808
SJ805	124
SJ806	124
SJ811	175
SJ820	130
SJ821	219
SJ822	218
SJ1000F	5809
SJ1003F	156
SJ1106	130
SJ1152	153
SJ1165	124
SJ1171	153
SJ1172	175
SJ1201	124
SJ1272	180
SJ1284	153
SJ1286	124
SJ1470	130
SJ1902	247
SJ1903	248
SJ1925	133
SJ2000	130
SJ2001	219
SJ2008	130
SJ2009	218
SJ2023	180
SJ2024	180
SJ2031	129
SJ2032	128
SJ2047	181
SJ2064	181
SJ2086	247
SJ2087	248
SJ2095	175
SJ2519	284
SJ2520	285
SJ3408	175
SJ3423	162
SJ3447	175
SJ3464	130
SJ3477	162
SJ3478	162
SJ3507	180
SJ3519	181
SJ3520	219
SJ3604	130
SJ3629	123AP
SJ3636	180
SJ3637	180
SJ3648	175
SJ3678	130
SJ3679	219
SJ3680	175
SJ4401H	238
SJ4433	2349
SJ4789	175
SJ4861	261
SJ4863	275
SJ5196	162
SJ5257	385
SJ5525	164
SJ5526	165
SJ5589	182
SJ5636	218
SJ5810	219
SJ7133	238
SJ7269	283
SJ8701	130
SJ9110	130
SJ10003EK	5890
SJ-570	116
SJE42	152
SJE100	184
SJE103	190
SJE106	184
SJE108	185
SJE111	185
SJE112	185
SJE113	184
SJE114	185
SJE133	184
SJE202	185
SJE203	184
SJE205	157
SJE210	185
SJE211	184
SJE218	157
SJE220	182
SJE221	185
SJE222	184
SJE227	185
SJE228	184
SJE229	184
SJE231	185
SJE232	157

PART NUMBER	NTE REPLACEMENT
SJE237	184
SJE241	185
SJE242	184
SJE243	185
SJE244	184
SJE245	185
SJE246	184
SJE248	184
SJE253	184
SJE254	184
SJE255	184
SJE256	185
SJE257	185
SJE261	184
SJE262	184
SJE264	180
SJE265	185
SJE267	185
SJE271	184
SJE272	184
SJE273	185
SJE274	184
SJE275	185
SJE276	185
SJE277	185
SJE278	184
SJE279	185
SJE280	184
SJE283	185
SJE284	184
SJE288	185
SJE289	184
SJE290	157
SJE305	184
SJE320	184
SJE325	54
SJE340	184
SJE400	157
SJE401	184
SJE402	184
SJE403	185
SJE404	184
SJE405	184
SJE407	184
SJE408	185
SJE513	152
SJE514	153
SJE515	152
SJE516	182
SJE517	183
SJE527	184
SJE583	184
SJE584	185
SJE633	185
SJE634	184
SJE649	184
SJE669	184
SJE677	153
SJE678	152
SJE687	189
SJE694	152
SJE695	153
SJE721	184
SJE723	185
SJE724	184
SJE736	185
SJE737	184
SJE743	185
SJE764	180
SJE768	185
SJE769	184
SJE781	184
SJE783	152
SJE784	184
SJE785	184
SJE797	185
SJE799	185
SJE1032	190
SJE1357	331
SJE1459	182
SJE1518	185
SJE1519	184
SJE1520	184
SJE2423	54
SJE2481K	51
SJE2482K	51
SJE2492	198
SJE2721-2	379
SJE2748	253
SJE2811	261
SJE3478	162
SJE3754	157
SJE5018	182
SJE5019	182
SJE5020	182
SJE5340	262
SJE5402	184
SJE5439	241
SJE5441	241
SJE5442	242
SJE7099	152
SJE-513	152
SJE-515	152
SJE-649	184
SJE-5038	186
SJE-5402	186
SK0040AT	1281
SK1FM	116
SK1K-2	116
SK1K-8	116
SK1W55	148A
SK2A4	5000A
SK2A4/5000A	5000A
SK2A5	5001A
SK2A5/5001A	5001A
SK2A7	5002A
SK2A7/5002A	5002A
SK2A8	5003A
SK2A8/5003A	5003A
SK2V7	5063A
SK2V7/5063A	5063A
SK2V8/5064A	5064A
SK3A0	5004A
SK3A0/5004A	5004A
SK3A3	5005A
SK3A3/5005A	5005A
SK3A6	5006A
SK3A6/5006A	5006A
SK3A9	5007A
SK3A9/5007A	5007A
SK3V0	5065A
SK3V0/5065A	5065A
SK3V3	5066A
SK3V3/5066A	5066A
SK3V6	134A
SK3V6/134A	134A
SK3V9	5067A
SK3V9/5067A	5067A
SK3X3	5111A
SK3X3/5111A	5111A
SK3X6	5112A
SK3X6/5112A	5112A
SK3X9	5113A
SK3X9/5113A	5113A
SK4A3	5009A
SK4A3/5008A	5008A
SK4A7	5009A
SK4A7/5009A	5009A
SK4V3	5068A
SK4V3/5068A	5068A
SK4V7	5069A
SK4V7/5069A	5069A
SK4X3	5114A
SK4X3/5114A	5114A
SK4X7	5115A
SK4X7/5115A	5115A
SK5A1	5010A
SK5A1/5010A	5010A
SK5A6	5011A
SK5A6/5011A	5011A
SK5V1	135A
SK5V1/135A	135A
SK5V6	136A
SK5V6/136A	136A
SK5X1	5116A
SK5X1/5116A	5116A
SK5X6	5117A
SK5X6/5117A	5117A
SK6A0	5012A
SK6A0/5012A	5012A
SK6A2	5013A
SK6A2/5013A	5013A
SK6A8	5014A
SK6A8/5014A	5014A
SK6V0	5070A
SK6V0/5070A	5070A
SK6V2	137A
SK6V2/137A	137A
SK6V8	5071A
SK6V8/5071A	5071A
SK6X0	5118A
SK6X0/5118A	5118A
SK6X2	5119A
SK6X2/5119A	5119A
SK6X8	5120A
SK6X8/5120A	5120A
SK7	101
SK7A5	5015A
SK7A5/5015A	5015A
SK7V5	138A
SK7V5/138A	138A
SK7X5	5121A
SK7X5/5121A	5121A
SK8A7	5017A
SK8A7/5017A	5017A
SK8V2	5072A
SK8V2/5072A	5072A
SK8V7	5073A
SK8V7/5073A	5073A
SK8X2	5122A
SK8X2/5122A	5122A
SK8X7	5123A
SK8X7/5123A	5123A
SK9A1	5018A
SK9A1/5018A	5018A
SK9V1	139A
SK9V1/139A	139A
SK9X1	5124A
SK9X1/5124A	5124A
SK10A	5019A
SK10A/5019A	5019A
SK10V	140A
SK10V/140A	140A
SK10X	5125A
SK10X/5125A	5125A
SK11A	5020A
SK11A/5020A	5020A
SK11V	5074A
SK11V5	141A
SK11V5/141A	141A
SK11V/5074A	5074A
SK11X	5126A
SK11X/5126A	5126A
SK12A	5021A
SK12A/5021A	5021A
SK12V	142A
SK12V/142A	142A
SK12X	5127A
SK12X/5127A	5127A
SK13A	5022A
SK13A/5022A	5022A
SK13V	143A
SK13V/143A	143A
SK13X	5128A
SK13X/5128A	5128A
SK14A	5023A
SK14A/5023A	5023A
SK14V	144A
SK14V/144A	144A
SK14X	5129A
SK14X/5129A	5129A
SK15A	5024A
SK15A/5024A	5024A
SK15V	145A
SK15V/145A	145A
SK15X	5130A
SK15X/5130A	5130A
SK16/1V014	1V014
SK16A	5025A
SK16A/5025A	5025A
SK16V	5075A
SK16V/5075A	5075A
SK16X	5131A
SK16X/5131A	5131A
SK17A	5026A
SK17A/5026A	5026A
SK17V	5076A
SK17V/5076A	5076A
SK17X	5132A
SK17X/5132A	5132A
SK18A	5027A
SK18A/5027A	5027A
SK18V	5077A
SK18V/5077A	5077A
SK18X	5133A
SK18X/5133A	5133A
SK19	132
SK19A	5028A
SK19A/5028A	5028A
SK19V	5078A
SK19V/5078A	5078A
SK19X	5134A
SK19X/5134A	5134A
SK20A	5029A
SK20A/5029A	5029A
SK20V	5079A
SK20V/5079A	5079A
SK20X	5135A
SK20X/5135A	5135A
SK22/1V020	1V020
SK22A	5030A
SK22A/5030A	5030A
SK22V	5080A
SK22V/5080A	5080A
SK22X	5136A
SK24A	5031A
SK24A/5031A	5031A
SK24V	5081A
SK24V/5081A	5081A
SK24X	5137A
SK24X/5137A	5137A
SK25A	5032A
SK25A/5032A	5032A
SK25V	5082A
SK25V/5082A	5082A
SK25X	5138A
SK25X/5138A	5138A
SK27A	5033A
SK27A/5033A	5033A
SK27V	146A
SK27V/146A	146A
SK27X	5139A
SK28A	5034A
SK28A/5034A	5034A
SK28V	5083A
SK28V/5083A	5083A
SK28X	5140A
SK28X/5140A	5140A
SK30A	5035A
SK30A/5035A	5035A
SK30V	5084A
SK30V/5084A	5084A
SK30X	5141A
SK30X/5141A	5141A
SK33A	5036A
SK33A/5036A	5036A
SK33V	147A
SK33V/147A	147A
SK33X	5142A
SK33X/5142A	5142A
SK36A	5037A
SK36A/5037A	5037A
SK36V	5085A
SK36V/5085A	5085A
SK36X	5143A
SK36X/5143A	5143A
SK39A	5038A
SK39A/5038A	5038A
SK39V	5086A
SK39V/5086A	5086A
SK39X	5144A
SK39X/5144A	5144A
SK43A	5039A
SK43A/5039A	5039A
SK43V	5087A
SK43V/5087A	5087A
SK43X	5145A
SK43X/5145A	5145A
SK47A	5040A
SK47A/5040A	5040A
SK47V	5088A
SK47V/5088A	5088A
SK47X	5146A
SK47X/5146A	5146A
SK51/1V130	1V130
SK51A	5041A
SK51A/5041A	5041A
SK51V	5089A
SK51V/5089A	5089A
SK51X	5147A
SK51X/5147A	5147A
SK52/2V130	2V130
SK53/524V13	524V13
SK55V	148A
SK55V/148A	148A
SK56A	5042A
SK56A/4042A	5042A
SK56V	5090A
SK56V/5090A	5090A
SK56X	5148A
SK56X/5148A	5148A
SK60/1V150	1V150
SK60A	5043A
SK60A/5043A	5043A
SK60V	5091A
SK60V/5091A	5091A
SK60X	5149A
SK60X/5149A	5149A
SK62A	5044A
SK62A/5044A	5044A
SK62V	149A
SK62V/149A	149A
SK62X	5150A
SK62X/5150A	5150A
SK63/524V15	524V15
SK68A	5045A
SK68A/5045A	5045A
SK68V	5092A
SK68V/5092A	5092A
SK68X	5151A
SK68X/5151A	5151A
SK73/2V250	2V250
SK74H00	74H00
SK74H04	74H04
SK74LS00	74LS00
SK74LS02	74LS02
SK74LS03	74LS03
SK74LS04	74LS04
SK74LS05	74LS05
SK74LS08	74LS08
SK74LS10	74LS10
SK74LS11	74LS11
SK74LS12	74LS12
SK74LS14	74LS14
SK74LS15	74LS15
SK74LS20	74LS20
SK74LS22	74LS22
SK74LS26	74LS26
SK74LS27	74LS27
SK74LS30	74LS30
SK74LS32	74LS32
SK74LS33	74LS33
SK74LS37	74LS37
SK74LS38	74LS38
SK74LS42	74LS42
SK74LS49	74LS49
SK74LS51	74LS51
SK74LS54	74LS54
SK74LS73	74LS73
SK74LS74	74LS74A
SK74LS74A	74LS74A
SK74LS75	74LS75
SK74LS76A	74LS76A
SK74LS77	74LS77
SK74LS78	74LS78
SK74LS83	74LS83A
SK74LS83A	74LS83A
SK74LS85	74LS85
SK74LS86	74LS86
SK74LS90	74LS90
SK74LS92	74LS92
SK74LS93	74LS93
SK74LS107	74LS107
SK74LS109	74LS109A
SK74LS113	74LS113
SK74LS114	74LS114
SK74LS122	74LS122
SK74LS123	74LS123
SK74LS125A	74LS125A
SK74LS133	74LS133
SK74LS136	74LS136
SK74LS138	74LS138
SK74LS139	74LS139
SK74LS151	74LS151
SK74LS153	74LS153
SK74LS155	74LS155
SK74LS156	74LS156
SK74LS157	74LS157
SK74LS161	74LS161A
SK74LS163	74LS163A
SK74LS164	74LS164
SK74LS168A	74LS168A
SK74LS169A	74LS169A
SK74LS174	74LS174
SK74LS175	74LS175
SK74LS191	74LS191
SK74LS193	74LS193
SK74LS194	74LS194A
SK74LS195	74LS195A
SK74LS221	74LS221
SK74LS240	74LS240
SK74LS241	74LS241
SK74LS242	74LS242
SK74LS243	74LS243
SK74LS244	74LS244
SK74LS245	74LS245
SK74LS248	74LS248
SK74LS249	74LS249
SK74LS253	74LS253
SK74LS257	74LS257
SK74LS258	74LS258
SK74LS259	74LS259
SK74LS260	74LS260
SK74LS266	74LS266
SK74LS273	74LS273
SK74LS279	74LS279
SK74LS280	74LS280
SK74LS290	74LS290
SK74LS293	74LS293
SK74LS298	74LS298
SK74LS364	74LS364
SK74LS367	74LS367
SK74LS373	74LS373
SK74LS377	74LS377
SK74LS378	74LS378
SK74LS379	74LS379
SK74LS386	74LS386
SK74LS393	74LS393
SK74LS490	74LS490
SK74LS624	74LS624
SK74LS625	74LS625
SK74LS626	74LS626
SK74LS627	74LS627
SK74LS629	74LS629
SK74S00	74S00
SK74S04	74S04
SK74S11	74S11
SK74S20	74S20
SK74S22	74S22
SK74S74	74S74
SK74S86	74S86
SK74S112	74S112
SK74S174	74S174
SK75A	5046A
SK75A/5046A	5046A
SK75V	5093A
SK75V/5093A	5093A
SK75X	5152A
SK75X/5152A	5152A
SK82A	5047A
SK82A/5047A	5047A
SK82V	150A
SK82V/150A	150A
SK82X	5153A
SK82X/5153A	5153A
SK87A	5048A
SK87A/5048A	5048A
SK87V	5094A
SK87V/5094A	5094A
SK87X	5154A
SK87X/5154A	5154A
SK91A	5049A
SK91A/5049A	5049A
SK91V	5095A
SK91V/5095A	5095A
SK91X	5155A
SK91X/5155A	5155A
SK100A	5050A
SK100A/5050A	5050A
SK100V	5096A
SK100V/5096A	5096A
SK100X	5156A
SK100X/5156A	5156A
SK102	585
SK104	585
SK107-4	312
SK110A	5051A
SK110A/5051A	5051A
SK110V	151A
SK110V/151A	151A
SK110X	5157A
SK110X/5157A	5157A
SK114	5174A
SK114/5174A	5174A
SK115	5174AK
SK115/5174AK	5174AK
SK116	5175A
SK116/5175A	5175A
SK117	5175AK
SK117/5175AK	5175AK
SK118	5176A
SK118/5176A	5176A
SK119	5176AK
SK119/5176AK	5176AK
SK120	5177A
SK120/5177A	5177A
SK120A	5052A
SK120A/5052A	5052A
SK120V	5097A
SK120V/5097A	5097A
SK120X	5158A
SK120X/5158A	5158A
SK121	5177AK
SK121/5177AK	5177AK
SK122	5178A
SK122/5178A	5178A
SK123	5178AK
SK123/5178AK	5178AK
SK124	5179A
SK124/5179A	5179A
SK125	5179AK
SK125/5179AK	5179AK
SK126	5180A
SK126/5180A	5180A
SK127	5180AK
SK127/5180AK	5180AK
SK128	5181A
SK128/5181A	5181A
SK129	5131AK
SK129/5181AK	5131AK
SK130	5182A
SK130/5182A	5182A
SK130A	5053A
SK130A/5053A	5053A
SK130V	5098A
SK130V/5098A	5098A
SK130X	5159A
SK130X/5159A	5159A
SK131	5182AK
SK131/5182AK	5182AK
SK132	5183A
SK132/5183A	5183A
SK133	5183AK
SK133/5183AK	5183AK
SK134	5184A
SK134/5184A	5184A
SK135	5184AK
SK135/5184AK	5184AK
SK136	5185A
SK136/5185A	5185A
SK137	5185AK
SK137/5185AK	5185AK
SK138	5186A
SK138/5186A	5186A
SK139	5186AK
SK139/5186AK	5186AK
SK140	5187A
SK140/5187A	5187A
SK140A	5054A
SK140A/5054	5054A
SK140V	5099A
SK140V/5099A	5099A
SK140X	5160A
SK140X/5160A	5160A
SK141	5187AK
SK141/5187AK	5187AK
SK142	5188A
SK142/5188A	5188A
SK143	5188AK
SK143/5188AK	5188AK
SK144	5189A
SK144/5189A	5189A
SK145	5189AK
SK145/5189AK	5189AK
SK146	5190A
SK146/5190A	5190A
SK147	5190AK
SK147/5190AK	5190AK
SK148	5191A
SK148/5191A	5191A
SK149	5191AK
SK149/5191AK	5191AK
SK150	5192A
SK150/5192A	5192A
SK150A	5055A
SK150A/5055A	5055A
SK150V	5100A
SK150V/5100A	5100A
SK150X	5161A
SK150X/5161A	5161A
SK151	5192AK
SK151/5192AK	5192AK
SK152	5193A
SK152/5193A	5193A
SK153	5193AK
SK153/5193AK	5193AK
SK154	5194A
SK154/5194A	5194A
SK155	5194AK
SK155/5194AK	5194AK
SK156	5195A
SK156/5195A	5195A
SK157	5195AK
SK157/5195AK	5195AK
SK158	5196A
SK158/5196A	5196A
SK159	5196AK
SK159/5196AK	5196AK
SK160	5197A
SK160/5197A	5197A
SK160A	5056A
SK160A/5056A	5056A
SK160V	5101A
SK160V/5101A	5101A
SK160X	5162A
SK160X/5162A	5162A
SK161	5197AK
SK161/5197AK	5197AK
SK162	5198A
SK162/5198A	5198A
SK163	5198AK
SK163/5198AK	5198AK
SK164	5199A
SK164/5199A	5199A
SK165	5199AK
SK165/5199AK	5199AK
SK166	5200A
SK166/5200A	5200A
SK167	5200AK
SK167/5200AK	5200AK
SK168	5201A
SK168/5201A	5201A
SK169	5201AK
SK169/5201AK	5201AK
SK170	5202A
SK170/5202A	5202A
SK170A	5057A
SK170A/5057A	5057A
SK170V	5102A
SK170V/5102A	5102A
SK170X	5163A
SK170X/5163A	5163A
SK171	5202AK
SK171/5202AK	5202AK
SK172	5203A
SK172/5203A	5203A
SK173	5203AK
SK173/5203AK	5203AK
SK174	5204A
SK174/5204A	5204A
SK175	5204AK
SK175/5204AK	5204AK
SK176	5205A
SK176/5205A	5205A
SK177	5205AK
SK177/5205AK	5205AK
SK178	5206A
SK178/5206A	5206A
SK179	5206AK
SK179/5206AK	5206AK
SK180	5207A
SK180/5207A	5207A
SK180A	5058A
SK180A/5058A	5058A
SK180V	5103A
SK180V/5103A	5103A
SK180X	5164A
SK180X/5164A	5164A
SK181	5207AK
SK181/5207AK	5207AK
SK182	5208A
SK182/5208A	5208A
SK183	5208AK
SK183/5208AK	5208AK
SK184	5209A
SK184/5209A	5209A
SK185	5209AK
SK185/5209AK	5209AK
SK186	5210A
SK186/5210A	5210A
SK187	5210A
SK187/5210AK	5210AK
SK188	5211A
SK188/5211A	5211A
SK189	5211AK
SK189/5211AK	5211AK
SK190	5212A
SK190/5212A	5212A
SK190A	5059A
SK190A/5059A	5059A
SK190V	5104A
SK190V/5104A	5104A
SK190X	5165A
SK190X/5165A	5165A
SK191	5212AK
SK191/5212AK	5212AK
SK192	5213A
SK192/5213A	5213A
SK193	5213AK
SK193/5213AK	5213AK
SK194	5214A
SK194/5214A	5214A
SK195/5214AK	5214AK
SK196/5215A	5215A
SK197/5215AK	5215AK
SK198/5216A	5216A
SK199/5216AK	5216AK
SK200/5217A	5217A
SK200A	5060A
SK200A/5060A	5060A
SK200V	5105A
SK200V/5105A	5105A
SK200X	5166A
SK200X/5166A	5166A
SK201/5217AK	5217AK
SK202/5218A	5218A
SK203/5218AK	5218AK
SK204/5219A	5219A
SK205/5219AK	5219AK
SK206/5220A	5220A
SK207/5220AK	5220AK
SK208/5221A	5221A
SK209/5221AK	5221AK
SK210/5222A	5222A
SK211/5222AK	5222AK
SK212/5223A	5223A
SK213/5223AK	5223AK
SK214/5224A	5224A
SK215/5224AK	5224AK
SK216/5225A	5225A
SK217/5225AK	5225AK
SK218/5226A	5226A
SK219/5226AK	5226AK
SK220/5227A	5227A
SK221/5227AK	5227AK
SK222/5228A	5228A
SK223/5228AK	5228AK
SK224/5229A	5229A
SK225/5229AK	5229AK
SK226/5230A	5230A
SK227/5230AK	5230AK
SK228/5231A	5231A
SK229/5231AK	5231AK
SK230/5232A	5232A
SK231/5232AK	5232AK
SK342	904
SK510/5240A	5240A
SK511/5240AK	5240AK
SK512/5241A	5241A
SK513/5241AK	5241AK
SK514/5242A	5242A
SK515/5242AK	5242AK
SK516/5243A	5243A
SK517/5243AK	5243AK
SK518/5244A	5244A
SK519/5244AK	5244AK
SK520/5245A	5245A
SK521/5245AK	5245AK

PART NUMBER	NTE REPLACEMENT
SK522/5246A	5246A
SK523	5246AK
SK523/5246AK	5246AK
SK524	5247A
SK524/5247A	5247A
SK525	5247AK
SK525/5247AK	5247AK
SK526	5248A
SK526/5248A	5248A
SK527	5248AK
SK527/5248AK	5248AK
SK528	5249A
SK528/5249A	5249A
SK529	5249AK
SK529/5249AK	5249AK
SK530	5250A
SK530/5250A	5250A
SK531	5250AK
SK531/5250AK	5250AK
SK532	5251A
SK532/5251A	5251A
SK533	5251AK
SK533/5251AK	5251AK
SK534	5252A
SK534/5252A	5252A
SK535	5252AK
SK535/5252AK	5252AK
SK536	5253A
SK536/5253A	5253A
SK537	5253AK
SK537/5253AK	5253AK
SK538	5254A
SK538/5254A	5254A
SK539	5254AK
SK539/5254AK	5254AK
SK540	5255A
SK540/5255A	5255A
SK541	5255AK
SK541/5255AK	5255AK
SK542	5256A
SK542/5256A	5256A
SK543	5256AK
SK543/5256AK	5256AK
SK544	5257A
SK544/5257A	5257A
SK545	5257AK
SK545/5257AK	5257AK
SK546	5258A
SK546/5258A	5258A
SK547	5258AK
SK547/5258AK	5258AK
SK548	5259A
SK548/5259A	5259A
SK549	5259AK
SK549/5259AK	5259AK
SK550	5260A
SK550/5260A	5260A
SK551	5260AK
SK551/5260AK	5260AK
SK552	5261A
SK552/5261A	5261A
SK553	5261AK
SK553/5261AK	5261AK
SK554	5262A
SK554/5262A	5262A
SK555	5262AK
SK555/5262AK	5262AK
SK556	5263A
SK556/5263A	5263A
SK557	5263AK
SK557/5263AK	5263AK
SK558	5264A
SK558/5264A	5264A
SK559	5264AK
SK559/5264AK	5264AK
SK560	5265A
SK560/5265A	5265A
SK561	5265AK
SK561/5265AK	5265AK
SK562	5266A
SK562/5266A	5266A
SK563	5266AK
SK563/5266AK	5266AK
SK564	5267A
SK564/5267A	5267A
SK565	5267AK
SK565/5267AK	5267AK
SK566	5268A
SK566/5268A	5268A
SK567	5268AK
SK567/5268AK	5268AK
SK568	5269A
SK568/5269A	5269A
SK569	5269AK
SK569/5269AK	5269AK
SK570/5270A	5270A
SK571	5270AK
SK571/5270AK	5270AK
SK572	5271A
SK572/5271A	5271A
SK573	5271AK
SK573/5271AK	5271AK
SK574	5272A
SK574/5272A	5272A
SK575	5272AK
SK575/5272AK	5272AK
SK576	5273A
SK576/5273A	5273A
SK577	5273AK
SK577/5273AK	5273AK
SK578	5274A
SK578/5274A	5274A
SK579	5274AK
SK579/5274AK	5274AK

PART NUMBER	NTE REPLACEMENT
SK580	5275A
SK580/5275A	5275A
SK581	5275AK
SK581/5275AK	5275AK
SK582	5276A
SK582/5276A	5276A
SK583	5276AK
SK583/5276AK	5276AK
SK584	5277A
SK584/5277A	5277A
SK585	5277AK
SK585/5277AK	5277AK
SK586	5278A
SK586/5278A	5278A
SK587	5278AK
SK587/5278AK	5278AK
SK588	5279A
SK588/5279A	5279A
SK589	5279AK
SK589/5279AK	5279AK
SK590	5280A
SK590/5280A	5280A
SK591	5280AK
SK591/5280AK	5280AK
SK592	5281A
SK592/5281A	5281A
SK593	5281AK
SK593/5281AK	5281AK
SK594	5282A
SK594/5282A	5282A
SK595	5282AK
SK595/5282AK	5282AK
SK596	5283A
SK596/5283A	5283A
SK597	5283AK
SK597/5283AK	5283AK
SK598	5284A
SK598/5284A	5284A
SK599	5284AK
SK599/5284AK	5284AK
SK600	5285A
SK600/5285A	5285A
SK601/5285AK	5285AK
SK602	5286A
SK602/5286A	5286A
SK603	5286AK
SK603/5286AK	5286AK
SK604	5287A
SK604/5287A	5287A
SK605	5287AK
SK605/5287AK	5287AK
SK606	5288A
SK606/5288A	5288A
SK607	5288AK
SK607/5288AK	5288AK
SK608	5289A
SK608/5289A	5289A
SK609	5289AK
SK609/5289AK	5289AK
SK610	5290A
SK610/5290A	5290A
SK611	5290AK
SK611/5290AK	5290AK
SK612	5291A
SK612/5291A	5291A
SK613	5291AK
SK613/5291AK	5291AK
SK614	5292A
SK614/5292A	5292A
SK615	5292AK
SK615/5292AK	5292AK
SK616	5293A
SK616/5293A	5293A
SK617	5293AK
SK617/5293AK	5293AK
SK618	5294A
SK618/5294A	5294A
SK619	5294AK
SK619/5294AK	5294AK
SK620	5295A
SK620/5295A	5295A
SK621	5295AK
SK621/5295AK	5295AK
SK622	5296A
SK622/5296A	5296A
SK623	5296AK
SK623/5296AK	5296AK
SK821	8070
SK821-8070	8070
SK827	8076
SK827/8076	8076
SK832	8081
SK832-8081	8081
SK832/8081	8081
SK836	8085
SK836-8085	8085
SK841	8090
SK841/8090	8090
SK847	8096
SK847/8096	8096
SK849	8098
SK849/8098	8098
SK854	8103
SK854/8103	8103
SK859	8108
SK859/8108	8108
SK866	8115
SK866/8115	8115
SK869	8118
SK869/8118	8118
SK876	8125
SK876/8125	8125
SK890	8139
SK890/8139	8139

PART NUMBER	NTE REPLACEMENT
SK900	8149
SK900/8149	8149
SK901	8213
SK901/8213	8213
SK914	8226
SK914/8226	8226
SK930/8242	8242
SK948	8167
SK948/8167	8167
SK952/8181	8181
SK1127	341
SK1320	108
SK1405	335
SK1639	159
SK1639D	159
SK1640	159
SK1640A	123A
SK1641	123A
SK1856	159
SK1856A	159
SK1900	6821
SK1901	6800
SK1911	2053
SK1912	2732A
SK1914	74S157
SK1915	74S153
SK1917	74S02
SK1918	74LS374
SK1919	74LS251
SK1920	74LS21
SK1921	74LS197
SK1922	74LS173A
SK1923	74LS158
SK2000	3000
SK2001	3001
SK2002	3002
SK2003	3003
SK2004	3004
SK2007	3007
SK2008	3008
SK2009	3009
SK2009A	3009
SK2010	3010
SK2011	3011
SK2018	3018
SK2019	3019
SK2020	3020
SK2021	3021
SK2022	3022
SK2023	3023
SK2024	3024
SK2025	3025
SK2026	3026
SK2027	3027
SK2027/3027	3027
SK2031	3031
SK2032	3032
SK2035	3035A
SK2035/3035	3035A
SK2035A	3035A
SK2040	3040
SK2040/3040	3040
SK2041	3041
SK2041/3041	3041
SK2042	3042
SK2042/3042	3042
SK2043	3043
SK2046	3046
SK2048	3048
SK2048/3048	3048
SK2049	3049
SK2049/3049	3049
SK2052	3052
SK2053	3053
SK2053/3053	3053
SK2054	3054
SK2054/3054	3054
SK2055	3055
SK2055/3055	3055
SK2056	3056
SK2058	3058
SK2059	3059
SK2059/3059	3059
SK2060	3060
SK2060/3060	3060
SK2061	3061
SK2062	3062
SK2063	3063
SK2063/3063	3063
SK2064	3064
SK2064/3064	3064
SK2065	3065
SK2068	3068
SK2068/3068	3068
SK2069	3069
SK2069/3069	3069
SK2070	3070
SK2071	3071
SK2074	3074
SK2075	3075
SK2076	3076
SK2077	3077
SK2078	3078
SK2079	3079
SK2083	3083
SK2084	3084
SK2084/3084	3084
SK2086	3086
SK2087/3087	3087
SK2111	3111
SK2111/3111	3111
SK2112	3112
SK2112/3112	3112
SK2113	3113

PART NUMBER	NTE REPLACEMENT
SK2113/3113	3113
SK2114	3114
SK2114/3114	3114
SK2115	3115
SK2115/3115	3115
SK2116	3116
SK2116/3116	3116
SK2117	3117
SK2150	3150
SK2151	3151
SK2152	3152
SK2153	3153
SK2154	3154
SK2160	3160
SK2161	3161
SK2162	3162
SK2163	3163
SK2164	3164
SK2165	3165
SK2166	3166
SK2169	3030
SK2170	3131
SK2171	3130
SK2214	2114
SK2214/2114	2114
SK2604	159
SK2604A	159
SK2659/56006	56006
SK2716	2716
SK2716/2716	2716
SK2859/252	252
SK2880	3880
SK2881	3881
SK2882	3882
SK2924	74LS09
SK3003	102A
SK3003A	126A
SK3003A/120A	126A
SK3003A/126	126
SK3004	102A
SK3004/102A	102A
SK3005	100
SK3006	160
SK3006/160	160
SK3007	160
SK3008	126
SK3009	121
SK3010	103A
SK3011	101
SK3011A	101
SK3012	105
SK3012/105	105
SK3013	121MP
SK3014	121
SK3015	121MP
SK3016	116
SK3016A	5808
SK3017	117
SK3017A	116
SK3017B	117
SK3017B/117	117
SK3018	161
SK3019	108
SK3020	123
SK3020/123	123
SK3021	124
SK3021/124	124
SK3022	1188
SK3022/1188	1188
SK3023	704
SK3023/704	704
SK3024	128
SK3024/128	128
SK3025	129
SK3025/129	129
SK3027	130
SK3027/130	130
SK3029	130MP
SK3029/130MP	130MP
SK3030	116
SK3031	116
SK3032	1188
SK3032A	125
SK3033	125
SK3033A	125
SK3034	127
SK3035	127
SK3036	181
SK3037	181
SK3038	123
SK3039	316
SK3039/316	316
SK3040	154
SK3041	152
SK3042	230
SK3042/230	230
SK3043	515
SK3044	154
SK3044/154	154
SK3045	225
SK3045/225	225
SK3046	123
SK3047	128
SK3048	329
SK3048/329	329
SK3049	224
SK3049/224	224
SK3050	221
SK3050/221	221
SK3051	156A
SK3051/156	156
SK3051P10	156
SK3052	131
SK3053	397

PART NUMBER	NTE REPLACEMENT
SK3054	196
SK3054/196	196
SK3055	134A
SK3055/134A	134A
SK3056	135A
SK3056/135A	135A
SK3057	136A
SK3057/136A	136A
SK3058	137A
SK3058/137A	137A
SK3059	138A
SK3059/138A	138A
SK3060	139A
SK3060/139A	139A
SK3061	140A
SK3061/140A	140A
SK3062	142A
SK3062/142A	142A
SK3063	145A
SK3063/145A	145A
SK3064	146A
SK3064/146A	146A
SK3065	222
SK3065/222	222
SK3066	118
SK3066/118	118
SK3068	503
SK3068/503	503
SK3070	711
SK3070/711	711
SK3071	727
SK3071/727	727
SK3072	712
SK3072/712	712
SK3075	714
SK3075/714	714
SK3076	715
SK3077	790
SK3077/790	790
SK3078	789
SK3078/789	789
SK3079	162
SK3080	125
SK3081	125
SK3081/125	125
SK3081P100	125
SK3082	226
SK3082/226	226
SK3083	197
SK3083/197	197
SK3084	197
SK3085	197
SK3086	226MP
SK3086/226MP	226MP
SK3087	109
SK3088	109
SK3089	112
SK3089/112	112
SK3090	109
SK3090/109	109
SK3091	109
SK3092	141A
SK3092/141A	141A
SK3093	143A
SK3094	144A
SK3094/144A	144A
SK3095	147A
SK3095/147A	147A
SK3096	148A
SK3096/148A	148A
SK3097	149A
SK3097/149A	149A
SK3098	150A
SK3098/150A	150A
SK3099	151A
SK3099/151A	151A
SK3100	519
SK3100/519	519
SK3100P10	519
SK3103	228A
SK3103A	396
SK3103A/396	396
SK3104	228A
SK3104A	396
SK3105	5304
SK3106	5304
SK3106/5304	5304
SK3107	5307
SK3107/5307	5307
SK3108	505
SK3108/505	505
SK3110	120
SK3110/120	120
SK3111	165
SK3112	312
SK3114	290
SK3114/290	290
SK3114A	290A
SK3114A/290A	290A
SK3115	165
SK3115/165	165
SK3116	452
SK3117	161
SK3118	159
SK3119	113A
SK3119/113	113A
SK3121	115
SK3121/115	115
SK3122	289A
SK3124	289
SK3124/289	289
SK3124A	289A
SK3124A/289A	289A
SK3125	551

PART NUMBER	NTE REPLACEMENT
SK3126	614
SK3127	515
SK3128	515
SK3129	726
SK3129/726	726
SK3130	506
SK3131	175
SK3131A	369
SK3131A/369	369
SK3132	233
SK3133	164
SK3133/164	164
SK3134	705A
SK3135	709
SK3135/709	709
SK3136	5072A
SK3136/5072A	5072A
SK3137	192A
SK3137/192A	192A
SK3138	193A
SK3138/193A	193A
SK3139	5074A
SK3139/5074A	5074A
SK3141	780
SK3141/780	780
SK3142	5075A
SK3143	730
SK3143/730	730
SK3144	723
SK3144/723	723
SK3145	5077A
SK3146	787
SK3146/787	787
SK3147	788
SK3148	146A
SK3149	791
SK3149/791	791
SK3150	5084A
SK3151	5081A
SK3151/5081A	5081A
SK3152	1024
SK3152/1024	1024
SK3153	1027
SK3153/1027	1027
SK3154	1323
SK3154/1323	1323
SK3156	172A
SK3156/172A	172A
SK3157	703
SK3157/703A	703
SK3158	797
SK3158/797	797
SK3160	801
SK3160/801	801
SK3161	722
SK3161/722	722
SK3162	725
SK3162/725	725
SK3163	736
SK3163/736	736
SK3164	923
SK3164/923	923
SK3165	923D
SK3165/923D	923D
SK3166	949
SK3166/949	949
SK3167	738
SK3167/738	738
SK3168	749
SK3168/749	749
SK3170	731
SK3170/731	731
SK3171	744
SK3171/744	744
SK3172	743
SK3172/743	743
SK3173	219
SK3173/219	219
SK3174	116
SK3175	506
SK3175A	506
SK3176	350
SK3176/350	350
SK3177	351
SK3177/351	351
SK3178B	49
SK3178B/49	49
SK3179B	50
SK3179B/50	50
SK3180	263
SK3180/263	263
SK3181	262
SK3181A	264
SK3181A/264	264
SK3182	243
SK3182/243	243
SK3183	246
SK3183A	244
SK3184	1115
SK3184/1115	1115
SK3185	984
SK3185/984	984
SK3186	1174
SK3186/1174	1174
SK3187	454
SK3188	241
SK3188A	331
SK3188A/182	182
SK3189	242
SK3189A	332
SK3189A/183	183
SK3190	184
SK3190/184	184
SK3191	185

PART NUMBER	NTE REPLACEMENT
SK3191/185	185
SK3192	186
SK3192/186	186
SK3192/186A	186A
SK3193	187
SK3193/187	187
SK3193/187A	187A
SK3195	311
SK3195/311	311
SK3196/310	310
SK3197	235
SK3197/235	235
SK3198	131
SK3198/131	131
SK3199	188
SK3199/188	188
SK3200	189
SK3200/189	189
SK3201	171
SK3201/171	171
SK3202	210
SK3202/210	210
SK3203	211
SK3203/211	211
SK3204	731
SK3205	982
SK3206	836
SK3206/836	836
SK3207	818
SK3207/818	818
SK3208	843
SK3210	1176
SK3211	797
SK3213	1177
SK3214	985
SK3214/985	985
SK3215	783
SK3215/783	783
SK3218	278
SK3218/278	278
SK3219	198
SK3220	198
SK3220/198	198
SK3221	264
SK3222	263
SK3223	1100
SK3223/1100	1100
SK3224	1102
SK3224/1102	1102
SK3225	1104
SK3225/1104	1104
SK3228	1061
SK3228/1061	1061
SK3229	1110
SK3229/1110	1110
SK3230	1154
SK3230/1154	1154
SK3231	1155
SK3231/1155	1155
SK3232	191
SK3232/191	191
SK3233	973
SK3233/973	973
SK3234	746
SK3234/746	746
SK3235	739
SK3235/739	739
SK3236	748
SK3236/748	748
SK3238	799
SK3238/799	799
SK3239	236
SK3239/236	236
SK3241	232
SK3241/232	232
SK3243	1160
SK3243/1160	1160
SK3244	287
SK3245	199
SK3245/199	199
SK3246/229	229
SK3246A	229
SK3246A/229	229
SK3247	234
SK3247/234	234
SK3248	186
SK3249	1052
SK3249/1052	1052
SK3250	315
SK3250/315	315
SK3251	306
SK3251/306	306
SK3252	302
SK3252/302	302
SK3253	295
SK3253/295	295
SK3255	815
SK3255/815	815
SK3260	284
SK3261	175
SK3261/175	175
SK3262	129
SK3263	123A
SK3264	123A
SK3270	284
SK3273	152
SK3274	153
SK3274/153	153
SK3275	194
SK3275/194	194
SK3279	747
SK3279/747	747
SK3280	750
SK3280/750	750

PART NUMBER	NTE REPLACEMENT
SK3281	1103
SK3281/1103	1103
SK3283	1101
SK3283/1101	1101
SK3284	1080
SK3284/1080	1080
SK3288	1003
SK3288/1003	1003
SK3289	1158
SK3289/1158	1158
SK3291	1090
SK3293	107
SK3293/107	107
SK3295	1072
SK3295/1072	1072
SK3296	276
SK3296/276	276
SK3297	280
SK3297/280	280
SK3298	299
SK3298/299	299
SK3299	237
SK3299/237	237
SK3300	531
SK3300/531	531
SK3301	532
SK3301/531	531
SK3301/532	532
SK3302	533
SK3302/533	533
SK3303	522
SK3303/522	522
SK3304	500A
SK3304/500A	500A
SK3305	534
SK3305/534	534
SK3306	523
SK3306/523/526A	523
SK3307	529
SK3307/529	529
SK3308	530
SK3308/526	526A
SK3308/530	530
SK3309	539
SK3309/539	539
SK3310	538
SK3310/538	538
SK3311	116
SK3312	116
SK3313	116
SK3313/116	116
SK3315/507	507
SK3319	616P
SK3320	616
SK3320/616	616
SK3323	610
SK3323/610	610
SK3324	611
SK3324/611	611
SK3325	612
SK3325/612	612
SK3326	613
SK3326/613	613
SK3327	614
SK3327/614	614
SK3328	740A
SK3328/740A	740A
SK3329	524V15
SK3329/524	524V15
SK3329/524V15	524V15
SK3330	5066A
SK3330/5066A	5066A
SK3331	5067A
SK3331/5067A	5067A
SK3332	5068A
SK3332/5068A	5068A
SK3333	5069A
SK3333/5069A	5069A
SK3334	5071A
SK3334/5071A	5071A
SK3335	5079A
SK3335/5079A	5079A
SK3336	5080A
SK3336/5080A	5080A
SK3337	5085A
SK3337/5085A	5085A
SK3338	5086A
SK3338/5086A	5086A
SK3339	5087A
SK3339/5087A	5087A
SK3340	5088A
SK3340/5088A	5088A
SK3341	5089A
SK3341/5089A	5089A
SK3342	5090A
SK3342/5090A	5090A
SK3343	5092A
SK3343/5092A	5092A
SK3344	5093A
SK3344/5093A	5093A
SK3345	5095A
SK3345/5095A	5095A
SK3346	5096A
SK3346/5096A	5096A
SK3347	5097A
SK3347/5097A	5097A
SK3348	5098A
SK3348/5098A	5098A
SK3349	5099A
SK3349/5099A	5099A
SK3350	5100A
SK3350/5100A	5100A
SK3351	5101A
SK3351/5101A	5101A
SK3352	5102A
SK3352/5102A	5102A
SK3353	5103A
SK3353/5103A	5103A
SK3354	5104A
SK3354/5104A	5104A
SK3355	5105A
SK3355/5105A	5105A
SK3356	107
SK3357	186A
SK3357/186A	186A
SK3358	1006
SK3358/1006	1006
SK3359	281
SK3359/281	281
SK3360	280MP
SK3360/280MP	280MP
SK3361	1041
SK3361/1041	1041
SK3362	1040
SK3362/1040	1040
SK3363	1043
SK3363/1043	1043
SK3364	1660
SK3365	1004
SK3365/1004	1004
SK3366	1039
SK3366/1039	1039
SK3367	1042
SK3367/1042	1042
SK3368	1029
SK3368/1029	1029
SK3369	1035
SK3369/1035	1035
SK3370	1036
SK3370/1036	1036
SK3375	737
SK3375/737	737
SK3376	1010
SK3376/1010	1010
SK3377	5111A
SK3377/5111A	5111A
SK3378	5112A
SK3378/5112A	5112A
SK3379	5113A
SK3379/5113A	5113A
SK3380	5114A
SK3380/5114A	5114A
SK3381	5115A
SK3381/5115A	5115A
SK3382	5116A
SK3382/5116A	5116A
SK3383	5117A
SK3383/5117A	5117A
SK3384	5118A
SK3384/5118A	5118A
SK3385	5119A
SK3385/5119A	5119A
SK3386	5120A
SK3386/5120A	5120A
SK3387	5121A
SK3387/5121A	5121A
SK3388	5122A
SK3388/5122A	5122A
SK3389	5123A
SK3389/5123A	5123A
SK3390	5124A
SK3390/5124A	5124A
SK3391	5125A
SK3391/5125A	5125A
SK3392	5126A
SK3392/5126A	5126A
SK3393	5127A
SK3393/5127A	5127A
SK3394	5128A
SK3394/5128A	5128A
SK3395	5129A
SK3395/5129A	5129A
SK3396	5130A
SK3396/5130A	5130A
SK3397	5131A
SK3397/5131A	5131A
SK3398	5132A
SK3398/5132A	5132A
SK3399	5133A
SK3399/5133A	5133A
SK3400	5134A
SK3400/5134A	5134A
SK3401	5135A
SK3401/5135A	5135A
SK3402	5136A
SK3402/5136A	5136A
SK3403	5137A
SK3403/5137A	5137A
SK3404	5138A
SK3404/5138A	5138A
SK3405	5139A
SK3405/5139A	5139A
SK3406	5140A
SK3406/5140A	5140A
SK3407	5141A
SK3407/5141A	5141A
SK3408	5142A
SK3408/5142A	5142A
SK3409	5143A
SK3409/5143A	5143A
SK3410	5144A
SK3410/5144A	5144A
SK3411	5145A
SK3411/5145A	5145A
SK3412	5146A
SK3412/5146A	5146A
SK3413	5147A
SK3413/5147A	5147A
SK3414	5148A
SK3414/5148A	5148A
SK3415	5149A
SK3415/5149A	5149A
SK3416	5150A
SK3416/5150A	5150A
SK3417	5151A
SK3417/5151A	5151A
SK3418	5152A
SK3418/5152A	5152A
SK3419	5153A
SK3419/5153A	5153A
SK3420	5154A
SK3420/5154A	5154A
SK3421	5155A
SK3421/5155A	5155A
SK3422	5156A
SK3422/5156A	5156A
SK3423	5157A
SK3423/5157A	5157A
SK3424	5158A
SK3424/5158A	5158A
SK3425	5159A
SK3425/5159A	5159A
SK3426	5160A
SK3426/5160A	5160A
SK3427	5161A
SK3427/5161A	5161A
SK3428	5162A
SK3428/5162A	5162A
SK3429	5163A
SK3429/5163A	5163A
SK3430	5164A
SK3430/5164A	5164A
SK3431	5165A
SK3431/5165A	5165A
SK3432	5166A
SK3432/5166A	5166A
SK3433	287
SK3433/287	287
SK3434	288
SK3434/288	288
SK3434A	123A
SK3435	1028
SK3436	1028
SK3436/1028	1028
SK3437	180
SK3437/180	180
SK3439	155
SK3439A	163A
SK3439A/163A	163A
SK3440	291
SK3440/291	291
SK3441	292
SK3441/292	292
SK3442	308P
SK3443	513
SK3443/513	513
SK3444	123A
SK3444/123A	123A
SK3445	1192
SK3445/1192	1192
SK3446	1097
SK3446/1097	1097
SK3448	312
SK3449	297
SK3449/297	297
SK3450	298
SK3450/298	298
SK3451	807
SK3451/807	807
SK3452	108
SK3452/108	108
SK3453	742
SK3453/742	742
SK3455	804
SK3455/804	804
SK3457	1054
SK3457/1054	1054
SK3458	1056
SK3458/1056	1056
SK3459	1058
SK3459/1058	1058
SK3460	1060
SK3460/1060	1060
SK3461	1082
SK3461/1082	1082
SK3462	977
SK3462/977	977
SK3463	601
SK3463/601	601
SK3464	300
SK3464/300	300
SK3465	778A
SK3465/778A	778A
SK3466	159
SK3466/159	159
SK3467	283
SK3467/283	283
SK3468	1185
SK3468/1185	1185
SK3469	1195
SK3469/1195	1195
SK3470	1049
SK3470/1049	1049
SK3471	1046
SK3471/1046	1046
SK3472	1092
SK3472/1092	1092
SK3473	1140
SK3473/1140	1140
SK3474	1081A
SK3474/1081A	1081A
SK3475	1050
SK3475/1050	1050
SK3476	1085
SK3476/1085	1085
SK3477	1660
SK3477/1087	1087
SK3478	1130
SK3478/1130	1130
SK3481	1002
SK3483	1242
SK3483/1242	1242
SK3485	1142
SK3485/1142	1142
SK3486	1184
SK3486/1184	1184
SK3487	1234
SK3487/1234	1234
SK3488	1128
SK3488/1128	1128
SK3491	709
SK3493	1223
SK3493/1223	1223
SK3494	1055
SK3494/1055	1055
SK3496	1073
SK3496/1073	1073
SK3497	1248
SK3497/1248	1248
SK3499	1009
SK3499/1009	1009
SK3500	5882
SK3500/5882	5882
SK3501	5994
SK3501/5994	5994
SK3502	5513
SK3502/5513	5513
SK3503	5429
SK3503/5429	5429
SK3504	5509
SK3504/5508	5508
SK3505	5547
SK3505/5547	5547
SK3506	5642
SK3506/5642	5642
SK3507	56006
SK3508	5675
SK3508/5675	5675
SK3509	5695
SK3509/5695	5695
SK3510	130
SK3511	181
SK3512	16005
SK3513	16004
SK3514	941
SK3514/941	941
SK3515	5805
SK3516	5847
SK3517	5883
SK3517/5883	5883
SK3518	5995
SK3518/5995	5995
SK3519	5643
SK3519/5643	5643
SK3520	5677
SK3520/5677	5677
SK3521	5687
SK3522	5697
SK3522/5697	5697
SK3523	6407
SK3523/6407	6407
SK3524	784
SK3524/784	784
SK3525	724
SK3526	947
SK3526/947	947
SK3528	397
SK3528/397	397
SK3533	5635
SK3533/5635	5635
SK3535	327
SK3535/181	327
SK3539	908
SK3539/908	908
SK3540	903
SK3540/903	903
SK3541	914
SK3541/914	914
SK3542	904
SK3542/904	904
SK3543	912
SK3543/912	912
SK3544	917
SK3544/917	917
SK3545	907
SK3545/907	907
SK3546	905
SK3546/905	905
SK3548	906
SK3548/906	906
SK3550	916
SK3550/916	916
SK3552	941M
SK3552/941M	941M
SK3553	909
SK3554	917
SK3555	911
SK3556	947D
SK3556/947D	947D
SK3557	5437
SK3559	162
SK3559/162	162
SK3561	60
SK3562	175
SK3563	284
SK3564	955M
SK3564/955M	955M
SK3565	1171
SK3565/1171	1171
SK3567/922	922
SK3567A	922
SK3567A/922	922
SK3568	930
SK3568/930	930
SK3569	834
SK3569/834	834
SK3570	5457
SK3571	5438
SK3572	5463
SK3572/5463	5463
SK3573	5466
SK3573/5466	5466
SK3574	5554
SK3575	5554
SK3576	5556
SK3577	5427
SK3577/5427	5427
SK3578	5428
SK3578/5428	5428
SK3579	5504
SK3579/5504	5504
SK3580	5507
SK3580/5507	5507
SK3581	5543
SK3581/5543	5543
SK3582	5545
SK3582/5545	5545
SK3583	5641
SK3583/5641	5641
SK3584	5862
SK3584/5862	5862
SK3585	5952
SK3585/5952	5952
SK3586	5874
SK3586A	5818
SK3586A/5818	5818
SK3587A	5822
SK3587A/5822	5822
SK3590	909D
SK3590/909D	909D
SK3591	960
SK3591/960	960
SK3592	966
SK3592/966	966
SK3593	968
SK3593/968	968
SK3595	989
SK3595/989	989
SK3596	976
SK3596/976	976
SK3597	5455
SK3597/5455	5455
SK3598	5457
SK3598/5457	5457
SK3599	5858
SK3599/5858	5858
SK3600	5854
SK3600/5854	5854
SK3601	5850
SK3601/5850	5850
SK3602	5878
SK3602/5878	5878
SK3603	5874
SK3603/5874	5874
SK3604	5870
SK3604/5870	5870
SK3605	5948
SK3605/5948	5948
SK3606	5944
SK3606/5944	5944
SK3607	5940
SK3607/5940	5940
SK3608	5990
SK3608/5990	5990
SK3609	5986
SK3609/5986	5986
SK3610	5980
SK3610/5980	5980
SK3613	5514
SK3613/5514	5514
SK3614	5504
SK3615	5517
SK3615/5517	5517
SK3620	331
SK3621	328
SK3623	38
SK3623/38	38
SK3625	218
SK3625/218	218
SK3627	5404
SK3627/5404	5404
SK3628	6402
SK3628/6402	6402
SK3629	309K
SK3629/309K	309K
SK3630	964
SK3630/964	964
SK3631	5623
SK3631/5623	5623
SK3634	5444
SK3634/5444	5444
SK3635	5446
SK3635/5446	5446
SK3636	5448
SK3636/5448	5448
SK3637/1235	1235
SK3638	5402
SK3638/5402	5402
SK3638/5448	5448
SK3639	5812
SK3639/5812	5812
SK3640	5815
SK3640/5815	5815
SK3641	975
SK3641/975	975
SK3642	179
SK3642/179	179
SK3643	987
SK3643/987	987
SK3644	975
SK3646	871
SK3647	167
SK3647/167	167
SK3648	168
SK3648/168	168
SK3649	170
SK3649/170	170
SK3650	5340
SK3651	5342
SK3652	5693
SK3652/5693	5693
SK3653	5518
SK3653/5518	5518
SK3654	5519
SK3654/5519	5519
SK3655	5562
SK3655/5562	5562
SK3656	5564
SK3656/5564	5564
SK3657	5566
SK3657/5566	5566
SK3658	56004
SK3658/56004	56004
SK3659	56006
SK3659/56006	56006
SK3660	56008
SK3660/56008	56008
SK3661	56022
SK3661/56022	56022
SK3662	56024
SK3662/56024	56024
SK3663	56026
SK3663/56026	56026
SK3664	5602
SK3664/5602	5602
SK3665	5603
SK3665/5603	5603
SK3666	5605
SK3666/5605	5605
SK3667	2024
SK3668	922M
SK3668/922M	922M
SK3669	962
SK3669/962	962
SK3670	972
SK3670/972	972
SK3671	961
SK3671/961	961
SK3672	963
SK3672/963	963
SK3673	967
SK3673/967	967
SK3674	969
SK3674/969	969
SK3675	971
SK3675/971	971
SK3676	5305
SK3676/5305	5305
SK3677	5306
SK3677/5306	5306
SK3678	169
SK3678/169	169
SK3679	5322
SK3680	5322
SK3680/5322	5322
SK3681	5324
SK3681/5324	5324
SK3682	5326
SK3682/5326	5326
SK3683	5511
SK3683/5511	5511
SK3684	5512
SK3684/5512	5512
SK3685/5461	5461
SK3686/5462	5462
SK3687/5465	5465
SK3688	992
SK3688/992	992
SK3689	978
SK3689/978	978
SK3691	928
SK3691/928	928
SK3692	928M
SK3692/928M	928M
SK3694	2023
SK3694/2023	2023
SK3695	929
SK3696	930
SK3698	5987
SK3698/5987	5987
SK3699	958
SK3699/958	958
SK3700	1217
SK3700/1217	1217
SK3700A	158
SK3702	1453
SK3702/1453	1453
SK3703	1096
SK3703/1096	1096
SK3706	1181
SK3706/1181	1181
SK3707	1237
SK3707/1237	1237
SK3709	110MP
SK3709/110MP	110MP
SK3710	238
SK3710/238	238
SK3714	1200
SK3714/1200	1200
SK3716	161
SK3716/161	161
SK3716A	161
SK3717	121
SK3717/121	121
SK3718	121MP
SK3718/121MP	121MP
SK3719	104
SK3719/104	104
SK3720	104MP
SK3720/104MP	104MP
SK3721	100
SK3721/100	100
SK3722	102
SK3722/102	102
SK3723	1005
SK3723/1005	1005
SK3724	981
SK3724/981	981
SK3726	1278
SK3726/1278	1278
SK3727	1164
SK3731	1243
SK3731/1243	1243
SK3732	1167
SK3732/1167	1167
SK3733	1197
SK3733/1197	1197
SK3734	806
SK3734/806	806
SK3735	1216
SK3735/1216	1216
SK3736	1214
SK3736/1214	1214
SK3737	1179
SK3737/1179	1179
SK3738	1215
SK3738/1215	1215
SK3739	1211
SK3739/1211	1211
SK3740	1218
SK3740/1218	1218
SK3741	1219
SK3741/1219	1219
SK3742	1187
SK3742/1187	1187
SK3743	1123
SK3743/1123	1123
SK3745	1170
SK3746	326
SK3746/326	326
SK3747	157
SK3747/157	157
SK3748	282
SK3749	5073A
SK3749/5073A	5073A
SK3750	143A
SK3750/143A	143A
SK3751	5075A
SK3751/5075A	5075A
SK3752	5077A
SK3752/5077A	5077A
SK3753	5082A
SK3753/5082A	5082A
SK3754	5083A
SK3754/5083A	5083A
SK3755	5084A
SK3755/5084A	5084A
SK3756	508
SK3756/508	508
SK3757	509
SK3757/509	509
SK3758	510
SK3758/510	510
SK3759	511
SK3759/511	511
SK3760	512
SK3760/512	512
SK3761	514
SK3761/514	514
SK3762	1227
SK3762/1227	1227
SK3763	1226
SK3763/1226	1226
SK3764	127
SK3764/127	127
SK3765	195A
SK3765/195A	195A
SK3766	5000A
SK3766/5000A	5000A
SK3767	5001A
SK3767/5001A	5001A
SK3768	5002A
SK3768/5002A	5002A
SK3769	5003A
SK3769/5003A	5003A
SK3770	5004A
SK3770/5004A	5004A
SK3771	5005A
SK3771/5005A	5005A
SK3772	5006A
SK3772/5006A	5006A
SK3773	5007A
SK3773/5007A	5007A
SK3774	5008A
SK3774/5008A	5008A
SK3775/5009A	5009A
SK3776/5010A	5010A
SK3777	5011A

PART NUMBER	NTE REPLACEMENT
SK3777/5011A	5011A
SK3778	5012A
SK3778/5012A	5012A
SK3779	5013A
SK3779/5013A	5013A
SK3780	5014A
SK3780/5014A	5014A
SK3781	5015A
SK3781/5015A	5015A
SK3782	5016A
SK3782/5016A	5016A
SK3783	5017A
SK3783/5017A	5017A
SK3784	5018A
SK3784/5018A	5018A
SK3785	5019A
SK3785/5019A	5019A
SK3786	5020A
SK3786/5020A	5020A
SK3787	5021A
SK3787/5021A	5021A
SK3788	5022A
SK3788/5022A	5022A
SK3789	5023A
SK3789/5023A	5023A
SK3790	5024A
SK3790/5024A	5024A
SK3791	5025A
SK3791/5025A	5025A
SK3792	5026A
SK3792/5026A	5026A
SK3793	5027A
SK3793/5027A	5027A
SK3794	5028A
SK3794/5028A	5028A
SK3795	5029A
SK3795/5029A	5029A
SK3796	5030A
SK3796/5030A	5030A
SK3797	5031A
SK3797/5031A	5031A
SK3798	5032A
SK3798/5032A	5032A
SK3799	5033A
SK3799/5033A	5033A
SK3800	5034A
SK3800/5034A	5034A
SK3801	5035A
SK3801/5035A	5035A
SK3802	5036A
SK3802/5036A	5036A
SK3803	5037A
SK3803/5037A	5037A
SK3804	5038A
SK3804/5038A	5038A
SK3805	5039A
SK3805/5039A	5039A
SK3806	5040A
SK3806/5040A	5040A
SK3807	5041A
SK3807/5041A	5041A
SK3808	5042A
SK3808/5042A	5042A
SK3809	5043A
SK3809/5043A	5043A
SK3810	5044A
SK3810/5044A	5044A
SK3811	5045A
SK3811/5045A	5045A
SK3812	5046A
SK3812/5046A	5046A
SK3813	5047A
SK3813/5047A	5047A
SK3814	5048A
SK3814/5048A	5048A
SK3815	5049A
SK3815/5049A	5049A
SK3816	5050A
SK3816/5050A	5050A
SK3817	5051A
SK3817/5051A	5051A
SK3818	5052A
SK3818/5052A	5052A
SK3819	5053A
SK3819/5053A	5053A
SK3820	5054A
SK3820/5054A	5054A
SK3821	5055A
SK3821/5055A	5055A
SK3822	5056A
SK3822/5056A	5056A
SK3823	5057A
SK3823/5057A	5057A
SK3824	5058A
SK3824/5058A	5058A
SK3825	5059A
SK3825/5059A	5059A
SK3826	5060A
SK3826/5060A	5060A
SK3827	1166
SK3827/1166	1166
SK3828	1241
SK3828/1241	1241
SK3829	788
SK3829/788	788
SK3832	1231
SK3832/1231	1231
SK3833	1308
SK3833/1308	1308
SK3834	132
SK3834/132	132
SK3835	103A
SK3835/103A	103A
SK3836	284
SK3836/284	284
SK3837	5063A
SK3837/5063A	5063A
SK3838	5065A
SK3838/5065A	5065A
SK3839	155
SK3839/155	155
SK3840	131MP
SK3840/131MP	131MP
SK3841	294
SK3841/294	294
SK3843	558
SK3845	176
SK3845/176	176
SK3846	285
SK3846/285	285
SK3848	5806
SK3848/5806	5806
SK3849	293
SK3849/293	293
SK3852	1232
SK3852/1232	1232
SK3853	1374
SK3854	123AP
SK3854/123AP	123AP
SK3855	308
SK3855/308	308
SK3856	310
SK3856/310	310
SK3857	231
SK3857/231	231
SK3858	251
SK3858/251	251
SK3859	252
SK3859/252	252
SK3860	265
SK3860/265	265
SK3861	101
SK3861/101	101
SK3862	103
SK3862/103	103
SK3863	600
SK3863/600	600
SK3864	605A
SK3864/605	605A
SK3865	191
SK3865A	191
SK3866	31
SK3866A	31
SK3866A/31	31
SK3867	288
SK3867A	32
SK3867A/32	32
SK3868	HVD-1
SK3868/DIV-1	HVD-1
SK3869	HVD-2
SK3869/DIV-2	HVD-2
SK3870	HVD-3
SK3870/DIV-3	HVD-3
SK3871	HVD-4
SK3871/DIV-4	HVD-4
SK3874	1170
SK3874/1170	1170
SK3876	1135
SK3876/1135	1135
SK3877	1075A
SK3877/1075A	1075A
SK3878	1245
SK3878/1245	1245
SK3879	1246
SK3879/1246	1246
SK3880	1254
SK3880/1254	1254
SK3882	821
SK3882/821	821
SK3884	1536
SK3884/1536	1536
SK3885	1437
SK3885/1437	1437
SK3887	983
SK3888	1180
SK3888/1180	1180
SK3889	1228
SK3889/1228	1228
SK3891	829
SK3891/829	829
SK3892	973D
SK3892/973D	973D
SK3893	152
SK3893/152	152
SK3894	384
SK3894/384	384
SK3895	328
SK3895/328	328
SK3896	261
SK3896/261	261
SK3897	262
SK3897/262	262
SK3898	314
SK3898/314	314
SK3900	536A
SK3900/536A	536A
SK3901	549
SK3902	535
SK3902/535	535
SK3903	537
SK3903/537	537
SK3904	557
SK3904/557	557
SK3905	556
SK3905/556	556
SK3906	528
SK3906/528	528
SK3909	568
SK3909/568	568
SK3911	289
SK3912	234
SK3913	57
SK3914	1465
SK3914/1465	1465
SK3916	1273
SK3916/1273	1273
SK3917	1115A
SK3917/1115A	1115A
SK3918	986
SK3918/986	986
SK3919	822
SK3919/822	822
SK3920	1263
SK3920/1263	1263
SK3921	1268
SK3921/1268	1268
SK3922	1285
SK3922/1285	1285
SK3924	942
SK3924/942	942
SK3925	525
SK3925/525	525
SK3929	375
SK3930	398
SK3931	90
SK3931/90	90
SK3932	91
SK3932/91	91
SK3935	270
SK3935/270	270
SK3936	271
SK3936/271	271
SK3937	5632
SK3937/5632	5632
SK3938	5633
SK3938/5633	5633
SK3939/5636	5636
SK3940	5481
SK3940/5481	5481
SK3941	5482
SK3941/5482	5482
SK3942	5483
SK3942/5483	5483
SK3943	5485
SK3943/5485	5485
SK3944	5487
SK3944/5487	5487
SK3945	327
SK3945/327	327
SK3946	385
SK3946/385	385
SK3947	388
SK3947/388	388
SK3948	247
SK3948/247	247
SK3949	248
SK3949/248	248
SK3950	5400
SK3950/5400	5400
SK3951	5405
SK3951/5405	5405
SK3952	5406
SK3952/5406	5406
SK3953	5412
SK3953/5412	5412
SK3954	5414
SK3954/5414	5414
SK3955	5415
SK3955/5415	5415
SK3956	5416
SK3956/5416	5416
SK3957	62
SK3957/62	62
SK3958	390
SK3958/390	390
SK3959	391
SK3959/391	391
SK3960	392
SK3960/392	392
SK3961	393
SK3961/393	393
SK3962	1902
SK3962/1902	1902
SK3963	1249
SK3963/1249	1249
SK3964	1439
SK3964/1439	1439
SK3965	974
SK3965/974	974
SK3966	2060
SK3966/2060	2060
SK3967	1443
SK3967/1443	1443
SK3968	1161
SK3969	1116
SK3969/1116	1116
SK3973	988
SK3973/988	988
SK3975	2011
SK3975/2011	2011
SK3977	456
SK3977/456	456
SK3978	259
SK3978/259	259
SK3982/5064A	5064A
SK3983	394
SK3983/394	394
SK3984	106
SK3984/106	106
SK3985	5312
SK3985/5312	5312
SK3986	5313
SK3986/5313	5313
SK3987	5314
SK3987/5314	5314
SK3988	5315
SK3988/5315	5315
SK3989	5316
SK3989/5316	5316
SK3991	454
SK3991/454	454
SK3993	56014
SK3993/56014	56014
SK3995	52
SK3996	253
SK3996/253	253
SK3997	254
SK3997/254	254
SK3998	558
SK3998/506	506
SK3999	173BP
SK4000	4000
SK4001	4001B
SK4002	4002B
SK4006	4006B
SK4007	4007
SK4008	4008B
SK4011	4011B
SK4011B	4011B
SK4012	4012B
SK4012B	4012B
SK4013	4013B
SK4013B	4013B
SK4014	4014B
SK4014B	4014B
SK4015	4015B
SK4015B	4015B
SK4016	4016B
SK4016B	4016B
SK4017	4017B
SK4017B	4017B
SK4018	4018B
SK4018B	4018B
SK4019	4019B
SK4019B	4019B
SK4020	4020B
SK4020B	4020B
SK4021	4021B
SK4021B	4021B
SK4022	4022B
SK4022B	4022B
SK4023	4023B
SK4023B	4023B
SK4024	4024B
SK4024B	4024B
SK4025	4025B
SK4025B	4025B
SK4026B	4026B
SK4027	4027B
SK4027B	4027B
SK4028	4028B
SK4028B	4028B
SK4029	4029B
SK4029B	4029B
SK4030	4030B
SK4030B	4030B
SK4031B	4031B
SK4032B	4032B
SK4033B	4033B
SK4034B	4034B
SK4035	4035B
SK4035B	4035B
SK4038B	4038B
SK4040	4040B
SK4040B	4040B
SK4041UB	4041
SK4042	4042B
SK4042B	4042B
SK4043	4043B
SK4043B	4043B
SK4044	4044B
SK4044B	4044B
SK4045B	4045B
SK4046/980	980
SK4046B	4046B
SK4046B/980	980
SK4047B	4047B
SK4048B	4048B
SK4049UB	4049
SK4050	4050B
SK4050B	4050B
SK4051	4051B
SK4051B	4051B
SK4052	4052B
SK4052B	4052B
SK4053	4053B
SK4053B	4053B
SK4055	4055B
SK4055B	4055B
SK4056B	4056B
SK4060	4060B
SK4060B	4060B
SK4063B	4063B
SK4066	4066B
SK4066B	4066B
SK4067B	4067B
SK4068/4068B	4068B
SK4068B	4068B
SK4069	4069
SK4069UB	4069
SK4070B	4070B
SK4071	4071B
SK4071B	4071B
SK4072	4072B
SK4072B	4072B
SK4073/4073B	4073B
SK4073B	4073B
SK4075	4075B
SK4075B	4075B
SK4076/4076B	4076B
SK4076B	4076B
SK4077/4077B	4077B
SK4077B	4077B
SK4078/4078B	4078B
SK4078B	4078B
SK4081	4081B
SK4081B	4081B
SK4082/4082B	4082B
SK4082B	4082B
SK4085B	4085B
SK4086B	4086B
SK4089B	4089B
SK4093	4093B
SK4093B	4093B
SK4094B	4094B
SK4095B	4095B
SK4096B	4096B
SK4097B	4097B
SK4098B	4528B
SK4098B/4528B	4528B
SK4099/4099B	4099B
SK4099B	4099B
SK4502B	4502B
SK4503B	40097B
SK4508B	4508B
SK4510/4510B	4510B
SK4510B	4510B
SK4511	4511B
SK4511B	4511B
SK4512/4512B	4512B
SK4512B	4512B
SK4514/4514B	4514B
SK4514B	4514B
SK4515/4515B	4515B
SK4515B	4515B
SK4516B	4516B
SK4517B	4517B
SK4518	4518B
SK4518B	4518B
SK4520	4520B
SK4520B	4520B
SK4527B	4527B
SK4532B	4532B
SK4536B	4536B
SK4538B	4538B
SK4541B	4541B
SK4543B	4543B
SK4555	4555B
SK4555B	4555B
SK4556	4556B
SK4585B	4585B
SK4801	1217
SK4812	1632
SK4814	878
SK4816	1661
SK4821	1370
SK4822	1373
SK4825	1572
SK4826	859
SK4828	1606
SK4831	1667
SK4832	3080
SK4833	1664
SK4834	1628
SK4835	1604
SK4837	1540
SK4838	1475
SK4839	1467
SK4843	861
SK4900	27
SK4903	2306
SK4904	2305
SK4906	48
SK4907	257
SK4908	2308
SK4909	2315
SK4910	2084
SK4911	6090
SK4914	239
SK4915	455
SK4916	3103
SK4918	5629
SK4919	2310
SK4920	6419
SK4921	6418
SK4922	6411
SK4929	3091
SK4930	3100
SK4931	3101
SK4932	3102
SK4933	3090
SK4934	3082
SK4935	3044
SK4936	3036
SK4937	3028
SK4939	313
SK5001	581
SK5001/581	581
SK5002	552
SK5003	506
SK5006	156
SK5010A	156A
SK5012	506
SK5014	507
SK5016	580
SK5028	5329
SK5030	5330
SK5032	580
SK5036	580
SK5036/580	580
SK5060	6240
SK5131	5631
SK5131/5631	5631
SK5137	5637
SK5137/5637	5637
SK5173	5673
SK5173/5673	5673
SK5176/5676	5676
SK5184A	124
SK5188	75188
SK5188/75188	75188
SK5189	75189
SK5189/75189	75189
SK5237	5437
SK5237/5437	5437
SK5238	5438
SK5238/5438	5438
SK5538	5638
SK5538/5638	5638
SK5545	5645
SK5545/5645	5645
SK5550	5650
SK5550/5650	5650
SK5551	5651
SK5552	5652
SK5555	5655
SK5555/5655	5655
SK5556	5656
SK5556/5656	5656
SK5557	5657
SK5557/5657	5657
SK5579	5679
SK5588	5688
SK5589	5689
SK5590	5690
SK5745	5595
SK5797	159
SK5798	159
SK5801	123AP
SK5814A	124
SK5915	123AP
SK5942/5483	5483
SK6037/5317	5317
SK6345	159
SK6346	159
SK6347	159
SK6347A	159
SK6502	5502
SK6502/5502	5502
SK6554	6354
SK6554/6354	6354
SK6555	6355
SK6555/6355	6355
SK6556	6356
SK6556/6356	6356
SK6557	6357
SK6557/6357	6357
SK6558	6358
SK6558/6358	6358
SK6559	6359
SK6559/6359	6359
SK6561	6363
SK6601	5601
SK6601/5601	5601
SK6606/5606	5606
SK6607	5607
SK6607/5607	5607
SK6615	5515
SK6615/5515	5515
SK6616	5516
SK6616/5516	5516
SK6621	5521
SK6621/5521	5521
SK6622	5522
SK6622/5522	5522
SK6624	5524
SK6624/5524	5524
SK6627	5527
SK6627/5527	5527
SK6629	5529
SK6629/5529	5529
SK6630	5622
SK6630/5622	5622
SK6631	5531
SK6631/5531	5531
SK6634/5627	5627
SK6635	5637
SK6635/5628	5637
SK6641	5541
SK6641/5541	5541
SK6642	5542
SK6642/5542	5542
SK6648	5548
SK6648/5548	5548
SK6650	5550
SK6650/5550	5550
SK6651	5552
SK6652	5552
SK6652/5552	5552
SK6654	5554
SK6654/5554	5554
SK6656	5556
SK6656/5556	5556
SK6658	5558
SK6658/5558	5558
SK6681	5681
SK6681/5681	5681
SK6682	5682
SK6682/5682	5682
SK6683	5683
SK6683/5683	5683
SK6685	5685
SK6685/5685	5685
SK6686/5686	5686
SK6707	5608
SK6708	5608
SK6708/5608	5608
SK6709	5609
SK6709/5609	5609
SK6717	5567
SK6717/5567	5567
SK6718	5568
SK6718/5568	5568
SK6719	5569
SK6719/5569	5569
SK6720	5570
SK6720/5570	5570
SK6722	5572
SK6722/5572	5572
SK6724	5574
SK6724/5574	5574
SK6725	5575
SK6725/5575	5575
SK6727	5577
SK6727/5577	5577
SK6729	5579
SK6729/5579	5579
SK6730	5580
SK6730/5580	5580
SK6732	5582
SK6732/5582	5582
SK6734	5584
SK6734/5584	5584
SK6740	5640
SK6740/5640	5640
SK6744	5594
SK6744/5594	5594
SK6745	5595
SK6745/5595	5595
SK6746	5596
SK6746/5596	5596
SK6748	5598
SK6748/5598	5598
SK6749	5599
SK6749/5599	5599
SK6752	5452
SK6752/5452	5452
SK6753	5453
SK6753/5453	5453
SK6754	5454
SK6754/5454	5454
SK6760	5590
SK6760/5590	5590
SK6761	5591
SK6761/5591	5591
SK6762	5592
SK6762/5592	5592
SK6768	5368
SK6769	5369
SK6771	5371
SK6772	5372
SK6774	5374
SK6775	5375
SK6777	5587
SK6778	5589
SK6780	5380
SK6781	5381
SK6786	5386
SK6787	5387
SK6791	5491
SK6791/5491	5491
SK6792	5492
SK6792/5492	5492
SK6794	5494
SK6794/5494	5494
SK6796	5496
SK6796/5496	5496
SK6810	6810
SK6810/6810	6810
SK6866A	31
SK7038	5838
SK7039	5839
SK7042	5842
SK7042/5842	5842
SK7043	5843
SK7046	5846
SK7047	5847
SK7048	5848
SK7048/5848	5848
SK7049	5849
SK7049/5849	5849
SK7051	5851
SK7055	5855
SK7058	5858
SK7059	5859
SK7063	5863
SK7066	5866
SK7067	5867
SK7068	5868
SK7068/5868	5868
SK7069	5869
SK7069/5869	5869
SK7074	6074
SK7075	6075
SK7076	6076
SK7077	6077
SK7078	6078
SK7079	6079
SK7086	5886
SK7087	5887
SK7090	5890
SK7090/5890	5890
SK7091	5891
SK7091/5891	5891
SK7092	5892
SK7093	5893
SK7094	5894
SK7096	5896

PART NUMBER	NTE REPLACEMENT
SK7096/5896	5896
SK7097	5897
SK7100	5900
SK7100/5900	5900
SK7101	5901
SK7104	5904
SK7104/5904	5904
SK7105	5905
SK7108	5908
SK7109	5909
SK7110	5910
SK7110/5910	5910
SK7111	5911
SK7111/5911	5911
SK7145	5945
SK7153	5953
SK7153/5953	5953
SK7171	5871
SK7175	5875
SK7179	5879
SK7181	5981
SK7182	5982
SK7183	5983
SK7191	5991
SK7191/5991	5991
SK7198	5998
SK7199	5999
SK7202	6002
SK7202/6002	6002
SK7203	6003
SK7203/6003	6003
SK7206	6006
SK7207	6007
SK7208	6008
SK7209	6009
SK7210	6010
SK7211	6011
SK7220	6020
SK7221	6021
SK7222	6022
SK7223	6023
SK7226	6026
SK7226/6026	6026
SK7227	6027
SK7227/6027	6027
SK7234	6034
SK7234/6034	6034
SK7235	6035
SK7240	6040
SK7240/6040	6040
SK7241	6041
SK7242	6042
SK7243	6043
SK7244	6044
SK7244/6044	6044
SK7245	6045
SK7245/6045	6045
SK7248	6048
SK7249	6049
SK7250	6050
SK7251	6051
SK7254	6054
SK7254/6054	6054
SK7255	6055
SK7260	6060
SK7260/6060	6060
SK7261	6061
SK7261/6061	6061
SK7264	6064
SK7264/6064	6064
SK7265	6065
SK7268	6068
SK7269	6069
SK7272	6072
SK7272/6072	6072
SK7273	6073
SK7273/6073	6073
SK7303	5348
SK7313	5338
SK7333	527A
SK7333/527A	527A
SK7353	5335
SK7354	6154
SK7354/6154	6154
SK7355	6155
SK7355/6155	6155
SK7356	6156
SK7356/6156	6156
SK7357	6157
SK7357/6157	6157
SK7358	6158
SK7358/6158	6158
SK7359	6159
SK7359/6159	6159
SK7362	5962
SK7362/5962	5962
SK7363	5963
SK7363/5963	5963
SK7366	5966
SK7366/5966	5966
SK7367	5967
SK7367/5967	5967
SK7376	5826
SK7376/5826	5826
SK7377	5827
SK7377/5827	5827
SK7378/5828	5828
SK7379/5829	5829
SK7400	7400
SK7401	7401
SK7402	7402
SK7403	7403
SK7404	7404
SK7405	7405
SK7406	7406
SK7407	7407
SK7408	7408
SK7409	7409
SK7410	7410
SK7411	7411
SK7412	7412
SK7413	7413
SK7414	7414
SK7416	7416
SK7417	7417
SK7420	7420
SK7422	7422
SK7423	7423
SK7425	7425
SK7426	7426
SK7427	7427
SK7428	7428
SK7430	7430
SK7432	7432
SK7433	7433
SK7437	7437
SK7438	7438
SK7440	7440
SK7441	7441
SK7442	7442
SK7443	7443
SK7444	7444
SK7445	7445
SK7446	7446
SK7447	7447
SK7448	7448
SK7450	7450
SK7451	7451
SK7453	7453
SK7454	7454
SK7460	7460
SK7470	7470
SK7472	7472
SK7473	7473
SK7474	7474
SK7475	7475
SK7476	7476
SK7480	7480
SK7483	7483
SK7485	7485
SK7486	7486
SK7489	7489
SK7490	7490
SK7492	7492
SK7493	7493A
SK7494	7494
SK7495	7495
SK7496	7496
SK7497	7497
SK7600	1423
SK7600/1423	1423
SK7601	1424
SK7601/142	1424
SK7602	1591
SK7604	1525
SK7604/1525	1525
SK7605	1557
SK7605/1557	1557
SK7606	1650
SK7607	1486
SK7608	1375
SK7610	1561
SK7610/1561	1561
SK7611	1624
SK7612	2061
SK7615	921
SK7616	855
SK7617	927D
SK7618	1727
SK7619	1747
SK7620/1560	1560
SK7621	1521
SK7622	1381
SK7622/1381	1381
SK7626	1683
SK7627	1400
SK7627/1400	1400
SK7630	1363
SK7630/1363	1363
SK7633	1656
SK7634	1434
SK7635	1785
SK7637	1509
SK7638	1508
SK7641	858M
SK7642	1928
SK7643	1930
SK7643/1930	1930
SK7644	1900
SK7644/1900	1900
SK7645	853
SK7646	1548
SK7647	1546
SK7647/1546	1546
SK7648	1563
SK7648/1563	1563
SK7649	1293
SK7650	1724
SK7652	1626
SK7653	1676
SK7656	1515
SK7657	1556
SK7657/1556	1556
SK7658	1382
SK7659	1326
SK7660	1327
SK7661	1281
SK7665	1387
SK7667	1498
SK7670	1654
SK7672	1576
SK7673	1657
SK7674	1842
SK7676/1547	1547
SK7677	1571
SK7679	1651
SK7681	1570
SK7686	842
SK7687	1655
SK7692	868
SK7692/868	868
SK7703	1732
SK7704	1517
SK7704/1517	1517
SK7705	1725
SK7706	1378
SK7706/1378	1378
SK7707	1376
SK7707/1376	1376
SK7708	856
SK7708/856	856
SK7711	1687
SK7713	1682
SK7717	874
SK7718	873
SK7719	15040
SK7721	926
SK7724	1257
SK7724/1257	1257
SK7725	875
SK7725/875	875
SK7726	1566
SK7726/1566	1566
SK7727	809
SK7728	1062
SK7728/1062	1062
SK7729	1633
SK7729/1633	1633
SK7730	810A
SK7730/810A	810A
SK7731	860
SK7731/860	860
SK7732	3470
SK7732/3470	3470
SK7734	1656
SK7734/1656	1656
SK7735	1616
SK7735/1616	1616
SK7736	1658
SK7736/1658	1658
SK7739	1934
SK7739/1934	1934
SK7740	1936
SK7740/1936	1936
SK7741	1938
SK7741/1938	1938
SK7742	1940
SK7742/1940	1940
SK7743	1580
SK7743/1580	1580
SK7754	1015
SK7754/1015	1015
SK7757	1023
SK7757/1023	1023
SK7784	1236
SK7794	1435
SK7805	1567
SK7806	953
SK7807	954
SK7808	1377
SK7809	1733
SK7810	1734
SK7811	1735
SK7812	722
SK7813	826
SK7814	1391
SK7815	1390
SK7817	15018
SK7827	1630
SK7841	1671
SK7900	6404
SK7901	6408
SK7952	605A
SK8215	123A
SK8251	123A
SK8261	154
SK8937	161
SK9000	552
SK9000/552	552
SK9001	113A
SK9001/113A	113A
SK9002	115
SK9003	5800
SK9003/5800	5800
SK9004	5801
SK9004/5801	5801
SK9005	5802
SK9005/5802	5802
SK9006	5803
SK9006/5803	5803
SK9007	5804
SK9007/5804	5804
SK9008	5805
SK9008/5805	5805
SK9009	5808
SK9010	5809
SK9010/5809	5809
SK9012	990
SK9013	824
SK9013/824	824
SK9015	1417
SK9016	1410
SK9016/1410	1410
SK9017	927
SK9017/927	927
SK9019	2022
SK9019/2022	2022
SK9020	2021
SK9020/2021	2021
SK9021/5070A	5070A
SK9022/5076A	5076A
SK9023/5078A	5078A
SK9024/5094A	5094A
SK9025	702
SK9025/702	702
SK9026	701
SK9026/701	701
SK9027	849
SK9027/849	849
SK9028	700
SK9028/700	700
SK9031	284
SK9032	285
SK9033	60
SK9034	61
SK9037	5317
SK9037/5317	5317
SK9038	346
SK9038/346	346
SK9039	386
SK9039/386	386
SK9040	387
SK9040/387	387
SK9041	373
SK9041/373	373
SK9042	374
SK9042/374	374
SK9043	1402
SK9043/1402	1402
SK9045	1412
SK9046	1419
SK9046/1419	1419
SK9048	1428
SK9048/1428	1428
SK9049	1423
SK9049/1425	1425
SK9050	1427
SK9050/1427	1427
SK9053	1648
SK9054	1269
SK9054/1269	1269
SK9056	1440
SK9056/1440	1440
SK9058	1415
SK9058/1415	1415
SK9059	1406
SK9059/1406	1406
SK9061	1607
SK9061/1485	1485
SK9063/9403	9403
SK9064	1408
SK9064/1408	1408
SK9067	931
SK9067/931	931
SK9068	804
SK9070	911
SK9070/911	911
SK9072	452
SK9072/452	452
SK9074	1210
SK9074/1210	1210
SK9075	166
SK9075/166	166
SK9076	187A
SK9076/187A	187A
SK9077	2016
SK9077/2016	2016
SK9078	2017
SK9078/2017	2017
SK9079	2018
SK9079/2018	2018
SK9080	2019
SK9080/2019	2019
SK9081	2020
SK9081/2020	2020
SK9083A	6407
SK9083A/6407	6407
SK9084A	6408
SK9084A/6408	6408
SK9085	379
SK9085/379	379
SK9086	518
SK9086/518	518
SK9087	5327
SK9087/5327	5327
SK9088	5328
SK9088/5328	5328
SK9089	832
SK9089/832	832
SK9090	915
SK9090/915	915
SK9091	177
SK9091/177	177
SK9092	2012
SK9092/2012	2012
SK9093	2013
SK9093/2013	2013
SK9094	2014
SK9094/2014	2014
SK9095	2015
SK9095/2015	2015
SK9096	5814
SK9096/5814	5814
SK9097	5817
SK9097/5817	5817
SK9098	515
SK9098/515	515
SK9099	5340
SK9100	5340
SK9101	5340
SK9101/5340	5340
SK9102	5342
SK9103	5342
SK9103/5342	5342
SK9104	5344
SK9105	5344
SK9105/5344	5344
SK9106	HVD-12
SK9106/DIV-12	HVD-12
SK9107	274
SK9107/274	274
SK9108	275
SK9108/275	275
SK9109	97
SK9109/97	97
SK9110	99
SK9110/99	99
SK9111	98
SK9111/98	98
SK9112	377
SK9112/377	377
SK9113	378
SK9113/378	378
SK9114	81
SK9114/81	81
SK9115	82
SK9115/82	82
SK9116	241
SK9117	242
SK9118	375
SK9118/375	375
SK9119	89
SK9119/89	89
SK9120	6403
SK9120/6403	6403
SK9121	6410
SK9121/6410	6410
SK9122	6400
SK9122/6400	6400
SK9123	6401
SK9123/6401	6401
SK9124	6409
SK9124/6409	6409
SK9125	6405
SK9125/6405	6405
SK9126	825
SK9126/825	825
SK9127	828
SK9127/828	828
SK9128	924
SK9128/924	924
SK9129	924M
SK9129/924M	924M
SK9130	1578
SK9131	2311
SK9132	290A
SK9134	181
SK9134/181	181
SK9136	180
SK9136/180	180
SK9137	382
SK9137/382	382
SK9138	383
SK9138/383	383
SK9139	10
SK9140	53
SK9141	94
SK9141/94	94
SK9142	192
SK9142/192	192
SK9143	193
SK9143/193	193
SK9144	918
SK9144/918	918
SK9145	918
SK9145/918M	918M
SK9146	937
SK9146/937	937
SK9147	937M
SK9147/937M	937M
SK9148	461
SK9148/461	461
SK9148/852	852
SK9149	459
SK9149/459	459
SK9150	555
SK9150/555	555
SK9150A	555
SK9157	312
SK9157/312	312
SK9160	462
SK9160/462	462
SK9161	457
SK9161/457	457
SK9162	467
SK9162/467	467
SK9163	466
SK9163/466	466
SK9164	451
SK9164/451	451
SK9165	66
SK9165/66	66
SK9166	938
SK9166/938	938
SK9167	938M
SK9167/938M	938M
SK9168	965
SK9168/965	965
SK9169	950
SK9169/950	950
SK9170	951
SK9170/951	951
SK9171	940
SK9171/940	940
SK9172	997
SK9172/997	997
SK9173	948
SK9173/948	948
SK9174	925
SK9174/925	925
SK9175	910
SK9175/910	910
SK9176	910D
SK9176/910D	910D
SK9177	909
SK9177/909	909
SK9178	846
SK9178/846	846
SK9179	615P
SK9181	1292
SK9181/1292	1292
SK9182	1289
SK9182/1289	1289
SK9183	1290
SK9183/1290	1290
SK9186	1388
SK9186/1388	1388
SK9189	1331
SK9189/1331	1331
SK9191	1398
SK9191/1398	1398
SK9192	1565
SK9193	1544
SK9193/1544	1544
SK9194	1471
SK9194/1471	1471
SK9195	1575
SK9196	1492
SK9196/1492	1492
SK9197	1522
SK9197/1522	1522
SK9198	1409
SK9198/1409	1409
SK9200	902
SK9200/902	902
SK9201	996
SK9201/996	996
SK9202	841
SK9202/841	841
SK9203	2032
SK9203/2032	2032
SK9204	2054
SK9204/2054	2054
SK9206	851
SK9206/851	851
SK9207	863
SK9207/863	863
SK9208	1463
SK9208/1463	1463
SK9209	995
SK9209/995	995
SK9210	823
SK9210/823	823
SK9211	1483
SK9211/1483	1483
SK9212	1466
SK9212/1466	1466
SK9214	1418
SK9214/1418	1418
SK9215	956
SK9215/956	956
SK9216	957
SK9216/957	957
SK9217	919
SK9217/919	919
SK9218	919D
SK9218/919D	919D
SK9219	1917
SK9221	1903
SK9222	1905
SK9224	994M
SK9224/994M	994M
SK9225	1396
SK9225/1396	1396
SK9226	1117
SK9226/1117	1117
SK9227	1784
SK9228	1287
SK9228/1287	1287
SK9229	85
SK9229/85	85
SK9230	5332
SK9231	5332
SK9232	5332
SK9232/5332	5332
SK9233	5334
SK9233/5334	5334
SK9234	331
SK9234/331	331
SK9236	332
SK9236/332	332
SK9237	87
SK9237/87	87
SK9239	88
SK9239/88	88
SK9244	1558
SK9245	1636
SK9245/1636	1636
SK9247	1430
SK9247/1430	1430
SK9248	852
SK9249	1550
SK9250	1513
SK9250/1513	1513
SK9251	1380
SK9251/1380	1380
SK9252	1288
SK9252/1288	1288
SK9253	266
SK9253/266	266
SK9254	267
SK9254/267	267
SK9255	268
SK9255/268	268
SK9256	269
SK9256/269	269
SK9257	877
SK9259	96
SK9259/96	96
SK9260	39
SK9260/39	39
SK9263	51
SK9265	1297
SK9266	712
SK9269	1399
SK9269/1399	1399
SK9270	70
SK9270/70	70
SK9271	71
SK9271/71	71
SK9272	72
SK9272/72	72
SK9273	73
SK9273/73	73
SK9274	74
SK9274/74	74
SK9275	75
SK9275/75	75
SK9276	984
SK9276/984	984
SK9282	1289
SK9283	959
SK9283/959	959
SK9284	5820
SK9284/5820	5820
SK9285	5821
SK9285/5821	5821
SK9286	5819
SK9286/5819	5819
SK9287	5823
SK9287/5823	5823
SK9290	5461
SK9290/5461	5461
SK9291	5462
SK9291/5462	5462
SK9292	5463
SK9292/5463	5463
SK9293	5465
SK9293/5465	5465
SK9294	5466
SK9294/5466	5466
SK9295	95
SK9295/95	95
SK9298	1551
SK9299	1295
SK9299/1295	1295
SK9300	546
SK9300/546	546
SK9305	548
SK9305/548	548
SK9306	541
SK9306/541	541
SK9307	542
SK9307/542	542
SK9311	1296
SK9312	1490
SK9312/1490	1490
SK9313	1395
SK9313/1395	1395
SK9314	1417
SK9314/1417	1417
SK9315	1417
SK9315/1417	1417
SK9320	1532
SK9320/1532	1532
SK9321	1496
SK9321/1496	1496
SK9322	1468
SK9322/1468	1468
SK9323	941S
SK9324	1663
SK9325	1674
SK9326	1414
SK9326/1414	1414
SK9328	358
SK9328/358	358
SK9329	358A
SK9329/358A	358A
SK9330	358B
SK9330/358B	358B
SK9331	1914
SK9331/1914	1914
SK9332	1916
SK9332/1916	1916
SK9333	970
SK9334	1913
SK9334/1913	1913
SK9335	1915
SK9335/1915	1915
SK9336	1919
SK9336/1919	1919
SK9337	1912
SK9338	1918
SK9339	970
SK9339/970	970
SK9340	932
SK9340/932	932
SK9341	933

PART NUMBER	NTE REPLACEMENT
SK9341/933	933
SK9342	934
SK9342/934	934
SK9344	935
SK9344/935	935
SK9351	240
SK9351/240	240
SK9352	399
SK9352/399	399
SK9353	1403
SK9354	1401
SK9355	1473
SK9355/1473	1473
SK9356	1469
SK9356/1469	1469
SK9357	2079
SK9357/2079	2079
SK9359	1738
SK9360	1581
SK9361	1361
SK9361/1361	1361
SK9362	376
SK9362/376	376
SK9362A	376
SK9363	398
SK9363/398	398
SK9364	56
SK9364/56	56
SK9365	68
SK9365/68	68
SK9366	54
SK9366/54	54
SK9367	55
SK9367/55	55
SK9368	324
SK9368/324	324
SK9369	323
SK9369/323	323
SK9371	63
SK9371/63	63
SK9372	64
SK9372/64	64
SK9373	65
SK9373/65	65
SK9379	1545
SK9379/1545	1545
SK9380	1413
SK9380/1413	1413
SK9381	844
SK9381/844	844
SK9382	845
SK9382/845	845
SK9383	850
SK9384	1231A
SK9384/1231A	1231A
SK9386	867
SK9387	233
SK9387/233	233
SK9388	5344
SK9393	1471
SK9394	1294
SK9396	1362
SK9397	955S
SK9398	1298
SK9398/1298	1298
SK9402	1673
SK9403	1538
SK9403/1538	1538
SK9404	1539
SK9404/1539	1539
SK9406	1330
SK9406/1330	1330
SK9407	85
SK9411	389
SK9411/389	389
SK9412	255
SK9413	36
SK9413/36	36
SK9415	37
SK9415/37	37
SK9418	20
SK9419	81
SK9420	82
SK9422	2302
SK9423	40
SK9423/40	40
SK9424	41
SK9424/41	41
SK9425	42
SK9425/42	42
SK9426	43
SK9426/43	43
SK9427	44
SK9427/44	44
SK9428	45
SK9428/45	45
SK9429	33
SK9429/33	33
SK9430	34
SK9430/34	34
SK9432	319P
SK9433	123AP
SK9434	159
SK9435	190
SK9436	272
SK9437	273
SK9438	245
SK9439	246
SK9440	249
SK9441	250
SK9442	46
SK9443	232
SK9443/232	232
SK9446	92
SK9447	93
SK9448	58
SK9449	59
SK9450	241
SK9451	242
SK9452	51
SK9452/51	51
SK9453	24
SK9454	25
SK9455	172A
SK9455A/172A	172A
SK9459	47
SK9459/47	47
SK9460	458
SK9460/458	458
SK9461	46
SK9461/46	46
SK9462	228A
SK9468	128P
SK9468/128P	128P
SK9469	129P
SK9469/129P	129P
SK9471	217
SK9471/217	217
SK9472	227
SK9473	227
SK9475	2334
SK9476	2300
SK9476/2300	2300
SK9477	26
SK9477/26	26
SK9478	2330
SK9479	2340
SK9480	2338
SK9481	2336
SK9482	2314
SK9483	2307
SK9484	53
SK9485	2303
SK9486	2301
SK9487	2302
SK9488	2309
SK9489	2329
SK9495	5468
SK9495/5468	5468
SK9502	2382
SK9506	2383
SK9507	2383
SK9509	67
SK9509/67	67
SK9600	76
SK9601	76MP
SK9602	77
SK9603	317
SK9605	320
SK9607	325
SK9609	333
SK9610	334
SK9611	335
SK9612	336
SK9613	337
SK9614	338
SK9616	339
SK9617	341
SK9618	342
SK9619	343
SK9621	345
SK9622	346
SK9623	348
SK9624	349
SK9626	352
SK9627	353
SK9628	354
SK9629	355
SK9630	356
SK9631	357
SK9632	359
SK9633	360
SK9634	361
SK9635	362
SK9636	363
SK9637	364
SK9638	365
SK9639	366
SK9640	367
SK9641	368
SK9642	470
SK9643	471
SK9644	472
SK9645	473
SK9647	475
SK9648	476
SK9649	477
SK9650	478
SK9652	480
SK9653	481
SK9654	482
SK9655	483
SK9656	484
SK9657	485
SK9658	486
SK9659	488
SK9660	347
SK9661	13
SK9662	14
SK9663	15
SK9664	16
SK9665	17
SK9666	18
SK9667	19
SK9668	20
SK9669	21
SK9670	22
SK9671	23
SK9672	26
SK9700	6887
SK9701	6880
SK9702	6850
SK9704	74S113
SK9706	1635
SK9707	1608
SK9708	3047
SK9709	6048
SK9710	6079
SK9711	5646
SK9712	1833
SK9715	15004
SK9716	1793
SK9717	1791
SK9721	943M
SK9722	1808
SK9724	1809
SK9725	1688
SK9726	1779
SK9727	1810
SK9728	1835
SK9729	1684
SK9730	1782
SK9731	15029
SK9733	1811
SK9734	1812
SK9735	1813
SK9736	1828
SK9737	1829
SK9739	1814
SK9740	1834
SK9741	2358
SK9742	2357
SK9743	1776
SK9744	1778
SK9745	1798
SK9746	1781
SK9748	1728
SK9749	15015
SK9750	1838
SK9752	15002
SK9753	1797
SK9755	1837
SK9756	1836
SK9761	1732
SK9762	1748
SK9764	1873
SK9765	1843
SK9766	1787
SK9767	15003
SK9769	1677
SK9771	6204
SK9772	6202
SK9773	6200
SK9774	6094
SK9775	6087
SK9776	6246
SK9777	6244
SK9778	6210
SK9779	6208
SK9780	6206
SK9781	74C90
SK9782	74C85
SK9783	74C74
SK9784	74C42
SK9785	74C08
SK9786	75491B
SK9787	40097B
SK9788	9097
SK9789	9094
SK9790	8216
SK9791	6888
SK9792	6886
SK9793	6885
SK9794	6875
SK9795	6860
SK9796	6809
SK9797	6802
SK9798	6085
SK9799	857SM
SK9800	857M
SK9805	74C14
SK9806	74C00
SK9807	75451B
SK9808	56020
SK9809	6889
SK9810	6078
SK9811	5700
SK9812	4900
SK9813	2087
SK9814	2028
SK9815	1675
SK9816	1627
SK9817	1612
SK9818	1488
SK9822	862
SK9825	75494
SK9827	75453B
SK9828	75450B
SK9829	65101
SK9831	8318
SK9832	2117
SK9833	74136
SK9834	75452B
SK9835	74393
SK9837	7421
SK9838	1805
SK9839	15043
SK9840	24
SK9841	25
SK9842	460
SK9843	6417
SK9844	6416
SK9846	6415
SK9847	606
SK9848	607
SK9849	2329
SK9850	1790
SK9851	864
SK9853	453
SK9854	15044
SK9855	2325
SK9856	2351
SK9857	2352
SK9858	597
SK9859	598
SK9860	599
SK9861	5458
SK9862	887M
SK9863	888M
SK9864	889M
SK9866	1772
SK9867	1774
SK9868	1775
SK9870	1777
SK9871	1778
SK9873	1783
SK9874	1786
SK9875	1788
SK9877	1792
SK9878	1794
SK9879	1795
SK9880	1796
SK9881	1799
SK9882	1800
SK9883	1801
SK9884	1803
SK9885	1827
SK9887	1805
SK9889	1820
SK9890	1817
SK9891	1815
SK9892	1819
SK9893	1818
SK9894	1804
SK9895	1831
SK9896	1830
SK9897	1816
SK9898	1825
SK9899	1824
SK9902	1822
SK9903	2082
SK9906	2083
SK9907	2086
SK9908	2088
SK9911	1589
SK9912	1729
SK9913	2085
SK9914	29
SK9915	30
SK9916	214
SK9918	11
SK9919	12
SK9921	37MCP
SK9922	54MP
SK9923	55MCP
SK9924	60MP
SK9925	61MCP
SK9926	61MP
SK9927	68MCP
SK9928	87MP
SK9929	88MCP
SK9930	88MP
SK9931	93MCP
SK9932	129MCP
SK9933	153MCP
SK9934	585
SK9935	586
SK9936	152MP
SK9937	587
SK9938	588
SK9939	590
SK9940	591
SK9941	592
SK9942	593
SK9943	594
SK9944	595
SK9945	1860
SK9946	1859
SK9947	1678
SK9948	1685
SK9949	1689
SK9951	1710
SK9952	1711
SK9953	1712
SK9954	1713
SK9955	1730
SK9957	2355
SK9958	2356
SK9959	2359
SK9960	2360
SK9961	2414
SK9962	2415
SK9963	2428
SK9964	2429
SK9965	3081
SK9967	5010T1
SK9968	5011T1
SK9969	5013T1
SK9970	5019T1
SK9971	5021T1
SK9972	5330
SK9975	553
SK9976	615P
SK9977	1615
SK9978	1668
SK9980	1700
SK9981	1704
SK9983	1720
SK9984	181MP
SK9985	2304
SK9986	2318
SK9987	1358
SK9989	1461
SK9990	1611
SK9991	2328
SK9993	943M
SK9994	1741
SK9995	1742
SK9996	1743
SK9997	1339
SK9998	1345
SK10000	2312
SK10001	1749
SK10002	1754
SK10003	1759
SK10004	2313
SK10005	332MCP
SK10006	331MP
SK10012	1716
SK10015	2319
SK10017	1708
SK10018	1707
SK10019	1714M
SK10022	1717
SK10024	1721
SK10025	1722
SK10026	1723
SK10029	1736
SK10030	1737
SK10031	1739
SK10033	1745
SK10035	1750
SK10037	1753
SK10038	1755
SK10041	1758
SK10044	1762
SK10045	1763
SK10047	1901
SK10048	1906
SK10049	1907
SK10050	1908
SK10051	1909
SK10052	1911
SK10053	1920
SK10054	1923
SK10055	1924
SK10056	1925
SK10059	524V42
SK10060	524V27
SK10062	832SM
SK10063	834SM
SK10064	858SM
SK10065	859SM
SK10066	869
SK10067	876
SK10069	918SM
SK10070	922SM
SK10071	927SM
SK10072	928S
SK10073	928SM
SK10074	941SM
SK10075	943SM
SK10076	944
SK10077	944M
SK10079	948SM
SK10082	1845
SK10085	1855
SK10088	2331
SK10093	2361
SK10094	2362
SK10124	2358
SK10133	2392
SK10136	2324
SK10140	1871
SK10141	1874
SK10142	1832
SK10143	1839
SK10144	1840
SK10146	1843
SK10151	1852
SK10161	1870
SK10164	1872
SK10166	1875
SK10168	1877
SK10169	1879
SK10170	1880
SK10171	1881
SK10173	1883
SK10174	1884
SK10177	3099
SK10178	3098
SK10180	15005E
SK10181	15006E
SK10182	15007E
SK10183	15008E
SK10184	15009E
SK10185	15019E
SK10186	15020E
SK10187	15021E
SK10188	15022E
SK10189	15023E
SK10190	2057
SK10193	4902
SK10194	4903
SK10195	4918
SK10196	4919
SK10197	4926
SK10198	4927
SK10199	4928
SK10200	4929
SK10201	4934
SK10202	4935
SK10203	4950
SK10204	4951
SK10205	4958
SK10206	4959
SK10207	4988
SK10208	4989
SK10223	1602
SK10226	1609
SK10230	1621
SK10233	1631
SK10234	1634
SK10244	1679
SK10473	7004
SK31024-3	108
SK40100B	40100B
SK40106B	40106B
SK40160B	40160B
SK40161	40161B
SK40161B	40161B
SK40162B	40162B
SK40163B	40163B
SK40174B	40174B
SK40175B	40175B
SK40182B	40182B
SK40192B	40192B
SK40193B	40193B
SK40194B	40194B
SK45556B	4556B
SK74107	74107
SK74109	74109
SK74110	74110
SK74111	74111
SK74121	74121
SK74122	74122
SK74123	74123
SK74125	74125
SK74126	74126
SK74128	74128
SK74132	74132
SK74141	74141
SK74145	74145
SK74150	74150
SK74151	74151
SK74153	74153
SK74154	74154
SK74155	74155
SK74156	74156
SK74157	74157
SK74160	74160
SK74161	74161
SK74162	74162
SK74163	74163
SK74164	74164
SK74165	74165
SK74166	74166
SK74170	74170
SK74174	74174
SK74175	74175
SK74176	74176
SK74177	74177
SK74178	74178
SK74179	74179
SK74180	74180
SK74181	74181
SK74190	74190
SK74191	74191
SK74192	74192
SK74193	74193
SK74195	74195
SK74196	74196
SK74197	74197
SK74198	74198
SK74199	74199
SK707380	5633
SK16510006-2	129
SK16510006-4	129
SK-1B	116
SK-1W50	5089A
SK-1W55	5090A
SK-1W-55	148A
SK-1WS0	109
SK-7	101
SK-218	125
SK-31024-3	108
SKA0030	123AP
SKA1079	129
SKA1080	123AP
SKA1117	123AP
SKA1279	159
SKA1395	123AP
SKA1416	107
SKA4074	108
SKA4075	108
SKA4076	108
SKA4129	159
SKA4141	123AP
SKA4410	192
SKA4525	108
SKA4616	128
SKA4621	129
SKA4768	161
SKA5248	108
SKA5886	108
SKA6250	159
SKA9013	108
SKA9096	108
SKA-4061	159
SKA-4074	108
SKA-4075	107
SKA-4076	229
SKA-4590	229
SKA-4802	199
SKA-5248	108
SKA-5541	161
SKA-5658	190
SKA-5886	108
SKA-6256	123AP
SKA-6437	123AP
SKA-8105	123AP
SKB8339	123AP
SKHM7	548
SKKD46-400	6220
SKKD46-600	6220
SKKD46-800	6220
SKKD46-1000	6220
SKKD46-1200	6220
SKKD81-400	6230
SKKD81-600	6230
SKKD81-800	6230
SKKD81-1000	6230
SKKD81-1200	6230
SKKH41/04	5711
SKKH41/06	5711
SKKH41/08	5711
SKKH41/12	5711
SKKH56/04	5711
SKKH56/06	5711
SKKH56/08	5711
SKKH56/12	5711
SKKH71/04	5721
SKKH71/06	5721
SKKH71/08	5721
SKKH71/12	5721
SKKH91/04	5721
SKKH91/06	5721
SKKH91/08	5721
SKKH91/12	5721
SKKH3400	209
SKKH3400/209	209
SKKH3404	421
SKKH3404/421	421
SKKH3412	412
SKKH3412/412	412
SKKH3417	402
SKKH3417/402	402
SKKH3418	403
SKKH3418/403	403
SKKH3420	404
SKKH3420/404	404
SKKH3424	405
SKKH3424/405	405
SKKH3440	423
SKKH3440/423	423
SKKH3442	416
SKKH3442/416	416
SKKH3443	435P18
SKKH3443/435P18	435P18
SKKH3444	435P20
SKKH3444/435P20	435P20
SKKH3445	435P22
SKKH3445/435P22	435P22
SKKH3446	428
SKKH3446/428	428
SKKH3447	429
SKKH3447/429	429
SKKH3448	430
SKKH3448/430	430
SKKH3449	435P6
SKKH3449/435P6	435P6
SKKH3450	413
SKKH3450/413	413
SKKH3451	414
SKKH3451/414	414
SKKH3453	415
SKKH3453/415	415
SKKH3454	422
SKKH3454/422	422
SKKT15/04	5710
SKKT15/06	5710
SKKT15/08	5710
SKKT15/12	5710
SKKT19/04	5710
SKKT19/06	5710
SKKT19/08	5710
SKKT19/12	5710
SKKT26/04	5710
SKKT26/06	5710
SKKT26/08	5710
SKKT26/12	5710
SKKT41/04	5710
SKKT41/06	5710
SKKT41/08	5710
SKKT41/12	5710
SKKT56/04	5710
SKKT56/06	5710
SKKT56/08	5710
SKKT56/12	5710
SKKT71/04	5720
SKKT71/06	5720
SKKT71/08	5720
SKKT71/12	5720
SKKT91/04	5720
SKKT91/06	5720
SKKT91/08	5720
SKKT91/12	5720
SKMV10B	1V010
SKMV10B/1V010	1V010
SKMV10C	2V010
SKMV10C/2V010	2V010
SKMV14/2V014	2V014
SKMV14B	1V014
SKMV14B/1V014	1V014
SKMV14C	2V014
SKMV15B	1V015
SKMV15B/1V015	1V015
SKMV15C	2V015

PART NUMBER	NTE REPLACEMENT
SKMV15C/2V015	2V015
SKMV17B	1V017
SKMV17B/1V017	1V017
SKMV17C	2V017
SKMV17C/2V017	2V017
SKMV20B	1V020
SKMV20B/1V020	1V020
SKMV20C	2V020
SKMV20C/2V020	2V020
SKMV25A	1V025
SKMV25B	2V025
SKMV30A	1V030
SKMV30C	2V030
SKMV35B	1V035
SKMV35B/1V035	1V035
SKMV35C	2V035
SKMV35C/2V035	2V035
SKMV40B	1V040
SKMV40C	2V040
SKMV50B	1V050
SKMV50B/1V050	1V050
SKMV50C	2V050
SKMV50C/2V050	2V050
SKMV60A	1V060
SKMV60B	2V060
SKMV75A	1V075
SKMV75B	2V075
SKMV95B	2V095
SKMV115B	1V115
SKMV115B/1V115	1V115
SKMV115C	2V115
SKMV115C/2V115	2V115
SKMV130G	1V130
SKMV130H	1V130
SKMV130H/1V130	1V130
SKMV130J	2V130
SKMV130J/2V130	2V130
SKMV130K	524V13
SKMV130K/524V13	524V13
SKMV150H	1V150
SKMV150H/1V150	1V150
SKMV150J	2V150
SKMV150J/2V150	2V150
SKMV150K	524V15
SKMV150K/524V15	524V15
SKMV250H	1V250
SKMV250H/1V250	1V250
SKMV250J	2V250
SKMV250J/2V250	2V250
SKMV250K	524V25
SKMV250K/524V25	524V25
SKMV275A	1V275
SKMV275B	2V275
SKMV300	1V300
SKMV320B	2V300
SKMV420	2V420
SKMV480G	2V480
SKMV480G/2V480	2V480
SKMV480H	524V48
SKMV480H/524V48	524V48
SKN4F20/02	6007
SKN4F40/04	6009
SKN12/08	5886
SKN20/02UNF	5917
SKN20/04	5921
SKN20/04UNF	5921
SKN20/08	5929
SKN20/08UNF	5929
SKN26/04	5921
SKN26/04UNF	5921
SKN26/08	5929
SKN26/08UNF	5929
SKN45/02	6027
SKN45/02UNF	6027
SKN45/04	6035
SKN45/04UNF	6035
SKN45/08	6043
SKN45/08UNF	6043
SKN70/02	6055
SKN70/02UNF	6055
SKN70/04	6061
SKN70/08	6069
SKN70/08UNF	6069
SKN70/.04UNF	6061
SKN71/02	6055
SKN71/02UNF	6055
SKN71/04	6061
SKN71/04UNF	6061
SKN71/08	6069
SKN71/08UNF	6069
SKN100-02	6155/432
SKN170/04	6354
SKN170/04R	6355
SKN170/08	6358
SKN170/08R	6359
SKN320/08	6107
SKN-100/04	6155/432
SKN-100/08	6159/432
SKN-100/12	6163/432
SKN-130/02	6155/432
SKN-240/04	6107
SKR10/05	5636
SKR12/02	5874
SKR12/04	5878
SKR20/02	5916
SKR20/02UNF	5916
SKR20/04	5920
SKR20/04UNF	5920
SKR20/08	5928
SKR20/08UNF	5928
SKR26/02	5916
SKR26/02UNF	5916
SKR26/04	5920
SKR26/04UNF	5920
SKR26/08	5928
SKR26/08UNF	5928
SKR45/02	6026
SKR45/02UNF	6026
SKR45/04	6034
SKR45/04UNF	6034
SKR45/08	6042
SKR45/08UNF	6042
SKR70/02UNF	6054
SKR70/04	6060
SKR70/04UNF	6060
SKR70/08	6068
SKR70/08UNF	6068
SKR71/02	6054
SKR71/02UNF	6054
SKR71/04	6060
SKR71/04UNF	6060
SKR71/08	6068
SKR71/08UNF	6068
SKT215-02C	5587
SKT215-04C	5587
SKT215-06C	5587
SKT215-08C	5589
SKT215-10C	5589
SKT215-12C	5589
SKT250-02C	5587
SKT250-04C	5587
SKT250-06C	5587
SKT250-08C	5589
SKT250-10C	5589
SKT250-12C	5589
SKT300-02C	5587
SKT300-04C	5587
SKT300-06C	5587
SKT300-08C	5589
SKT300-10C	5589
SKT300-12C	5589
SKU10/06	5637
SKWHG7006	159
SL07040	909
SL030/3490	116
SL030S	116
SL030T	116
SL07055	909
SL08058	703
SL07059	703
SL08066	909
SL0305,T	116
SL04570	9951
SL051A	5940
SL03911	9949
SL03912	9961
SL03913	9963
SL03914	9932
SL03915	9944
SL03916	9937
SL03917	9951
SL04563	9930
SL04567	9936
SL04568	9932
SL07684	910
SL08797	941D
SL2	116
SL3	5878
SL5	116
SL10	5890
SL50	5870
SL91	117
SL92	117
SL93	117
SL100	108
SL103	177
SL119	159
SL200	106
SL201	106
SL300	123AP
SL301C	128
SL301CE	128
SL400	5878
SL403	289
SL490	1755
SL490B	1755
SL490B/DP	1755
SL500	5882
SL600	5882
SL608	125
SL610	125
SL708	125
SL710	125
SL800	5886
SL800X	5886
SL833	116
SL833A	116
SL1000	5890
SL1000X	5890
SL3081	916
SL3081DG	916
SL3081DP	916
SL3082	2023
SL3101	129
SL3111	129
SL5732B	7441
SL7059	703
SL7153	5953
SL7283	703
SL7308	703
SL7531	703
SL7593	703
SL7790	703
SL7990	123AP
SL8020	703
SL8058	703
SL11877	9930
SL11878	9936
SL11879	9946
SL11880	9948
SL11881	9962
SL14959	74H10
SL14960	74H11
SL14971	7408
SL14972	7438
SL16201	9930
SL16203	9951
SL16204	9946
SL16206	9932
SL16208	9937
SL16209	9099
SL16210	9936
SL16211	9945
SL16212	9962
SL16215	9944
SL16216	9949
SL16218	9963
SL16516	9930
SL16517	9933
SL16518	9936
SL16519	9946
SL16520	9962
SL16521	9945
SL16522	9099
SL16584	9930
SL16586	9932
SL16587	9936
SL16588	9945
SL16589	9946
SL16590	9948
SL16591	9962
SL16793	7400
SL16794	7401
SL16795	7402
SL16796	7404
SL16797	7405
SL16798	7408
SL16799	7411
SL16800	7420
SL16801	7410
SL16802	7430
SL16803	7440
SL16804	7450
SL16805	7453
SL16806	7473
SL16807	7474
SL16808	7476
SL16809	7492
SL16810	7496
SL16811	9944
SL17242	7473
SL17284	9932
SL17289	9936
SL17869	7408
SL17887	7411
SL18386	7483
SL18387	74107
SL20575	703
SL20721	705A
SL20783	923
SL20927	909
SL20929	941
SL21122	714
SL21384	915
SL21385	923D
SL21436	910
SL21577	915
SL21584	949
SL21619	923
SL21654	712
SL21673	941
SL21823	910
SL21829	911
SL21864	722
SL21885	923
SL21895	703
SL21923	909
SL22044	911
SL22108	725
SL22211	725
SL22273	912
SL22310	923D
SL22348	925
SL22447	1045
SL22449	714
SL22623	912
SL22745	941M
SL22757	722
SL22819	703
SL22935	923D
SL23059	941M
SL23145	722
SL23147	712
SL23252	941M
SL23256	912
SL23296	923
SL23297	911
SL23299	736
SL23324	909
SL23325	923D
SL23326	941D
SL23418	705A
SL23418(PHILMONT)	705A
SL23421	703
SL23422	910
SL23423	911
SL23424	725
SL23425	949
SL23426	722
SL23482	909
SL23485	923
SL23486	941
SL23496	941M
SL23546	923
SL23560	705A
SL23648	723
SL23829	912
SL23904	714
SL23965	780
SL23966	949
SL23968	725
SL23971	744
SL23985	725
SL53424	9930
SL53425	9932
SL53426	9935
SL53427	9936
SL53428	9944
SL53429	9946
SL53431	7401
SL57332	7445
SL57333	7446
SL57334	7447
SL-030	116
SL-030T	116
SL-2	116
SL-3	116
SL-4	116
SL-5	5802
SL-100	108
SL-103	5872
SL-833	116
SL-833A	116
SLA01	125
SLA11AB	116
SLA11C	116
SLA12AB	116
SLA12C	116
SLA13AB	116
SLA13C	116
SLA14AB	116
SLA14C	116
SLA15AB	116
SLA15C	116
SLA16AB	116
SLA16C	116
SLA17AB	116
SLA17C	116
SLA18AB	125
SLA18C	125
SLA19AB	125
SLA19C	125
SLA21A	5800
SLA21B	5800
SLA21C	5800
SLA22A	5801
SLA22B	5801
SLA22C	5801
SLA23B	5802
SLA23C	5802
SLA24A	5804
SLA24B	5804
SLA24C	5804
SLA25A	5804
SLA25B	5804
SLA25C	5804
SLA26A	5806
SLA26B	5806
SLA26C	5806
SLA27A	5806
SLA27B	5806
SLA27C	5806
SLA28A	5808
SLA28B	5808
SLA28C	5808
SLA29A	5809
SLA29B	5809
SLA29C	5809
SLA440	116
SLA440B	116
SLA441	116
SLA441B	116
SLA442	116
SLA442B	116
SLA443	116
SLA443B	116
SLA444	116
SLA444A	116
SLA444B	116
SLA445	116
SLA445B	116
SLA536	116
SLA537	116
SLA538	116
SLA539	116
SLA540	116
SLA547	116
SLA560	125
SLA561	125
SLA599	116
SLA599A	116
SLA600	116
SLA600A	116
SLA601	116
SLA601A	116
SLA602	116
SLA602A	116
SLA603	116
SLA603A	116
SLA604	116
SLA604A	116
SLA605	116
SLA605A	116
SLA606	116
SLA606A	116
SLA1095	116
SLA1096	116
SLA1100	116
SLA1101	3111
SLA1102	116
SLA1103	5804
SLA1104	116
SLA1105	116
SLA1131	3113
SLA1487	116
SLA1488	116
SLA1489	116
SLA1490	116
SLA1491	116
SLA1492	116
SLA1692	116
SLA1693	116
SLA1694	116
SLA1695	116
SLA1696	116
SLA1697	116
SLA2101	3112
SLA2131	3114
SLA2610	116
SLA2611	116
SLA2612	116
SLA2613	116
SLA2614	116
SLA2615	116
SLA2616	125
SLA2617	125
SLA3193	116
SLA3194	116
SLA3195	116
SLA3196	125
SLA5197	5800
SLA5198	5801
SLA5199	5802
SLA5200	5804
SLA5201	5806
SLA5202	5808
SLA5203	5809
SLA-445	116
SLA01	125
SLD51C052-12	156
SLD51C052-18	156
SLD51C169-1	156(4)
SLD51C169-2	156
SLD50894-3	156(4)
SLEN-26	113A
SLFA	552
SLP154	3163
SLP155	3166
SLP254	3164
SLP254B	3164
SLP255	3167
SLP454	3165
SLP455	3168
SLP2045P	6090
SLP3020P	6090
SLP3030P	6090
SLP3035P	6090
SLP3040P	6090
SLP3045P	6090
SLP-151B	3160
SLP-151B-50	3060
SLP-152B	3150
SLP-154B	3163
SLP-155B	3166
SLP-172B	3153
SLP-251B	3161
SLP-252B	3151
SLP-254PE	3164
SLP-255B	3167
SLP-272B	3154
SLP-451B	3162
SLP-454B	3165
SLP-455B	3168
SLP-472B	3155
SLP-502D	3016
SLR-30AR	3022
SLR-30GGH	3024
SLR-37DU3	3009
SLR-37MG3	3010
SLR-37UR3	3008
SLR-37VR3	3007
SLR-37YC3	3011
SLR-56DU3	3023
SLR-56MG3	3024
SLR-56UR3	3022
SLR-56VR3	3020
SLR-56YY3	3021
SMOR5B42(G,T2,T1)	5855
SMOR5D42(G,T2,T1)	5555
SMOR5G42(G,T2,T1)	5556
SM0843	102A
SM07275	123AP
SM07286	123AP
SM1-02	116
SM1A02PTA	116
SM2B41	5613
SM2D41	5614
SM3G41	5605
SM4	116
SM5	116
SM6B14	5608
SM6D14	5608
SM6G14	5608
SM8D41	5632
SM8G41	5633
SM8J41	5635
SM10	116
SM10B12	5673
SM10D10	5633
SM10D12	5673
SM10G10	5635
SM10G12	5676
SM11	116
SM12D41	56004
SM12G41	56006
SM12J41	56008
SM20	116
SM30	116
SM30D11	5693
SM30G11	5695
SM31	116
SM40	116
SM50	116
SM51	116
SM60	116
SM63	7475
SM70	125
SM71	125
SM73	125
SM73(DIODE)	125
SM73(IC)	7475
SM80	125
SM81	125
SM83	125
SM100	125
SM101	125
SM103	125
SM105	116
SM110	116
SM112	116
SM120	116
SM130	116
SM140	116
SM150	125
SM150-01	125
SM150-02	125
SM150-6	125
SM150-11	125
SM150A	125
SM150B	125
SM150C	125
SM150D	125
SM150S	125
SM150SS	125
SM160	116
SM170	125
SM180	125
SM200	125
SM205	116
SM210	116
SM217	160
SM220	116
SM230	116
SM240	116
SM249I	160
SM250	116
SM260	116
SM270	125
SM280	125
SM300	125
SM483	116
SM486	116
SM487	116
SM488	116
SM505	116
SM510	116
SM512	116
SM513	116
SM514	116
SM515	116
SM516	116
SM517	125
SM518	125
SM520	125
SM576-1	123AP
SM576-2	123AP
SM645	116
SM646	116
SM705	116
SM710	116
SM716	123AP
SM720	116
SM730	116
SM740	116
SM750	116
SM760	116
SM770	125
SM780	125
SM800	125
SM843	102A
SM862	126
SM1297	160
SM1507	159
SM1600	160
SM2491	160
SM2492	160
SM2700	123AP
SM2701	123AP
SM2716	128
SM2718	129
SM3014	160
SM3104	123AP
SM3117A	123AP
SM3505	123AP
SM3978	128
SM3986	123AP
SM3987	129
SM4304-S	229
SM4508-B	123AP
SM4547	159
SM4574A	159
SM4719	159
SM5109	1167
SM5379	123AP
SM5564	123AP
SM5643	123AP
SM5796	108
SM5981	123AP
SM6251	128
SM6727	154
SM6728	129
SM6762	123AP
SM6773	123AP
SM6814	198
SM7545	123AP
SM7815	123AP
SM7836	123AP
SM7989	224
SM7991	128
SM8112	123AP
SM8113	123AP
SM8341	102A
SM8978	123AP
SM9008	123AP
SM9135	123AP
SM9253	123AP
SM62186	106
SM-05-15FR	525
SM-05-16FR	525
SM-1	116
SM-1.5-10Z1	116
SM-1-005	116
SM-1-02	552
SM-1-02FR	552
SM-1-02FRA	552
SM-1-47	116
SM-1A-01	116
SM-1A-02	116
SM-1A-04	116
SM-1A-04FR	552
SM-1A-200	116
SM-1K	116
SM-3-08FR	125
SM-10	116
SM-150	125
SM-150-005	125
SM-150-02	125
SM-150-02(BOOST)	506
SM-150-02(CENTERING)	507
SM-150-6(FOCUS)	506
SM-150A	125
SM-150B	116
SM-217	100
SM-716	123AP
SM-4304-S	161
SM-4508-B	123AP
SM-5564	123AP
SM-5643	123AP
SM-7815	123AP
SM-7836	123AP
SM-7991	195A
SM-A-595819-1	704
SM-A-595830-12	107
SM-A-618687-1	175
SM-A-726655	123AP
SM-A-726658	159
SM-A-726664	123AP
SM-B-523974	159
SM-B-574495	159
SM-B-610342	123AP
SM-B-686767	123AP
SM-C-583256	123AP
SM-C-706156	519
SMB447610	102
SMB447610A	102
SMB454549	102
SMB454760	160
SMB620782-1	176
SMB621960	102
SMB-541191	177
SMB-706009D	128
SMBTA13	2404
SMBTA14	2404
SMBTA63	2405
SMBTA64	2405
SMC7400N	7400
SMC7402N	7402
SMC7408N	7408
SMC7410N	7410
SMC7420N	7420
SMC7430N	7430
SMC7440N	7440
SMC7451N	7451
SMC7473N	7473
SMC7474N	7474
SMC7475N	7475
SMC7476N	7476
SMC7490N	7490
SMC7493N	7493A
SMC449077	129
SMC750123-1	941
SMC-583259	128
SMC-620774-1	128
SMIA02TPA	116
SMOR5B42(G)SM6D14	5633
SMOR5G42(G,T2,T1)	5656
SMRI1400	506
SMV505	611
SMV1172	614
SN0303	116
SN1	116
SN4LS490NS	74LS490
SN60	101
SN74C00N	74C00
SN74H00	74H00
SN74H00J	74H00
SN74H00N	74H00
SN74H01	74H01

PART NUMBER	NTE REPLACEMENT
SN74H01J	74H01
SN74H01N	74H01
SN74H04N	74H04
SN74H05N	74H05
SN74H10	74H10
SN74H10J	74H10
SN74H10N	74H10
SN74H11	74H11
SN74H11J	74H11
SN74H11N	74H11
SN74H20J	74H20
SN74H20N	74H20
SN74H21J	74H21
SN74H21N	74H21
SN74H22	74H22
SN74H22J	74H22
SN74H22N	74H22
SN74H30J	74H30
SN74H30N	74H30
SN74H40J	74H40
SN74H40N	74H40
SN74H50J	74H50
SN74H50N	74H50
SN74H51J	74H51
SN74H51N	74H51
SN74H52J	74H52
SN74H52N	74H52
SN74H53J	74H53
SN74H53N	74H53
SN74H54J	74H54
SN74H54N	74H54
SN74H55J	74H55
SN74H55N	74H55
SN74H60J	74H60
SN74H60N	74H60
SN74H61J	74H61
SN74H61N	74H61
SN74H62J	74H62
SN74H62N	74H62
SN74H71J	74H71
SN74H71N	74H71
SN74H72J	74H72
SN74H72N	74H72
SN74H73J	74H73
SN74H73N	74H73
SN74H74J	74H74
SN74H74N	74H74
SN74H76J	74H76
SN74H76N	74H76
SN74H78J	74H78
SN74H78N	74H78
SN74H87J	74H87
SN74H87N	74H87
SN74H101J	74H101
SN74H101N	74H101
SN74H102J	74H102
SN74H102N	74H102
SN74H103J	74H103
SN74H103N	74H103
SN74H108J	74H108
SN74H108N	74H108
SN74H183J	74H183
SN74H183N	74H183
SN74L93J	74L93
SN74L93N	74L93
SN74LS00	74LS00
SN74LS00N	74LS00
SN74LS00W	74LS00
SN74LS01	74LS01
SN74LS01N	74LS01
SN74LS02J	74LS02
SN74LS02N	74LS02
SN74LS02W	74LS02
SN74LS03N	74LS03
SN74LS03W	74LS03
SN74LS04N	74LS04
SN74LS05N	74LS05
SN74LS06	74LS06
SN74LS06N	74LS06
SN74LS08N	74LS08
SN74LS09	74LS09
SN74LS09N	74LS09
SN74LS10	74LS10
SN74LS10N	74LS10
SN74LS10ND	74LS10
SN74LS10NDS	74LS10
SN74LS10W	74LS10
SN74LS11JDS	74LS11
SN74LS11N	74LS11
SN74LS11NDS	74LS11
SN74LS11W	74LS11
SN74LS12	74LS12
SN74LS12N	74LS12
SN74LS13N	74LS13
SN74LS14	74LS14
SN74LS14N	74LS14
SN74LS15	74LS15
SN74LS15N	74LS15
SN74LS20N	74LS20
SN74LS20W	74LS20
SN74LS21	74LS21
SN74LS21N	74LS21
SN74LS21NDS	74LS21
SN74LS22	74LS22
SN74LS22N	74LS22
SN74LS26	74LS26
SN74LS26N	74LS26
SN74LS27N	74LS27
SN74LS27W	74LS27
SN74LS28	74LS28
SN74LS28N	74LS28
SN74LS30N	74LS30
SN74LS30W	74LS30
SN74LS32	74LS32
SN74LS32N	74LS32
SN74LS32NDS	74LS32
SN74LS32W	74LS32
SN74LS33	74LS33
SN74LS33N	74LS33
SN74LS37	74LS37
SN74LS37N	74LS37
SN74LS38N	74LS38
SN74LS40	74LS40
SN74LS40N	74LS40
SN74LS42	74LS42
SN74LS42N	74LS42
SN74LS42NDS	74LS42
SN74LS42W	74LS42
SN74LS47N	74LS47
SN74LS48N	74LS48
SN74LS49N	74LS49
SN74LS51	74LS51
SN74LS51N	74LS51
SN74LS51W	74LS51
SN74LS54	74LS54
SN74LS54N	74LS54
SN74LS55	74LS55
SN74LS55N	74LS55
SN74LS73	74LS73
SN74LS73AW	74LS73
SN74LS73J	74LS73
SN74LS73N	74LS73
SN74LS74AJ	74LS74A
SN74LS74AN	74LS74A
SN74LS74ANS	74LS74A
SN74LS74AW	74LS74A
SN74LS74N	74LS74A
SN74LS75N	74LS75
SN74LS75W	74LS75
SN74LS76AN	74LS76A
SN74LS78	74LS78
SN74LS78N	74LS78
SN74LS83AN	74LS83A
SN74LS83AW	74LS83A
SN74LS85J	74LS85
SN74LS85N	74LS85
SN74LS85W	74LS85
SN74LS86AN	74LS86
SN74LS86J	74LS86
SN74LS86N	74LS86
SN74LS86W	74LS86
SN74LS90	74LS90
SN74LS90N	74LS90
SN74LS91	74LS91
SN74LS91N	74LS91
SN74LS92	74LS92
SN74LS92N	74LS92
SN74LS93	74LS93
SN74LS93N	74LS93
SN74LS95	74LS95B
SN74LS95B	74LS95B
SN74LS95BN	74LS95B
SN74LS107AN	74LS107
SN74LS107AW	74LS107
SN74LS107N	74LS107
SN74LS109AN	74LS109A
SN74LS109AW	74LS109A
SN74LS112	74LS112A
SN74LS112AN	74LS112A
SN74LS113	74LS113
SN74LS113N	74LS113
SN74LS114	74LS114
SN74LS114N	74LS114
SN74LS122N	74LS122
SN74LS123	74LS123
SN74LS123N	74LS123
SN74LS123W	74LS123
SN74LS124J	74LS629
SN74LS124N	74LS629
SN74LS125A	74LS125A
SN74LS125AN	74LS125A
SN74LS126	74LS126A
SN74LS126A	74LS126A
SN74LS126N	74LS126A
SN74LS132	74LS132
SN74LS132N	74LS132
SN74LS133	74LS133
SN74LS133N	74LS133
SN74LS136J	74LS136
SN74LS136W	74LS136
SN74LS138J	74LS138
SN74LS138N	74LS138
SN74LS139	74LS139
SN74LS139AN	74LS139
SN74LS139N	74LS139
SN74LS145	74LS145
SN74LS145N	74LS145
SN74LS147N	74LS147
SN74LS148	74LS148
SN74LS148N	74LS148
SN74LS151N	74LS151
SN74LS153N	74LS153
SN74LS155	74LS155
SN74LS155AN	74LS155
SN74LS155N	74LS155
SN74LS156	74LS156
SN74LS156N	74LS156
SN74LS157N	74LS157
SN74LS158	74LS158
SN74LS158N	74LS158
SN74LS160	74LS160A
SN74LS160AN	74LS160A
SN74LS160AP	74LS160A
SN74LS161AN	74LS161A
SN74LS161AW	74LS161A
SN74LS161J	74LS161A
SN74LS161N	74LS161A
SN74LS162A	74LS162A
SN74LS162AN	74LS162A
SN74LS163	74LS163A
SN74LS163AJ	74LS163A
SN74LS163AN	74LS163A
SN74LS163AW	74LS163A
SN74LS163J	74LS163A
SN74LS163N	74LS163A
SN74LS164N	74LS164
SN74LS165	74LS165
SN74LS165N	74LS165
SN74LS166	74LS166
SN74LS166AN	74LS166
SN74LS166N	74LS166
SN74LS168	74LS168A
SN74LS168A	74LS168A
SN74LS168AN	74LS168A
SN74LS168N	74LS168A
SN74LS169	74LS169A
SN74LS169N	74LS169A
SN74LS170	74LS170
SN74LS170N	74LS170
SN74LS173	74LS173A
SN74LS173A	74LS173A
SN74LS173AN	74LS173A
SN74LS173N	74LS173A
SN74LS174N	74LS174
SN74LS174ND	74LS174
SN74LS175N	74LS175
SN74LS176AN	74LS126A
SN74LS181	74LS181
SN74LS181N	74LS181
SN74LS190	74LS190
SN74LS190N	74LS190
SN74LS191N	74LS191
SN74LS191W	74LS191
SN74LS192	74LS192
SN74LS192N	74LS192
SN74LS193N	74LS193
SN74LS193W	74LS193
SN74LS194A	74LS194A
SN74LS194AN	74LS194A
SN74LS195AN	74LS195A
SN74LS195N	74LS195A
SN74LS196	74LS196
SN74LS196N	74LS196
SN74LS197	74LS197
SN74LS197N	74LS197
SN74LS221N	74LS221
SN74LS221W	74LS221
SN74LS240N	74LS240
SN74LS241N	74LS241
SN74LS242N	74LS242
SN74LS243N	74LS243
SN74LS244	74LS244
SN74LS244(2)	74LS244
SN74LS244N	74LS244
SN74LS244NDS	74LS244
SN74LS245J	74LS245
SN74LS245N	74LS245
SN74LS247N	74LS247
SN74LS248N	74LS248
SN74LS249N	74LS249
SN74LS251N	74LS251
SN74LS251NDS	74LS251
SN74LS253N	74LS253
SN74LS257AN	74LS257
SN74LS257BN	74LS257
SN74LS257N	74LS257
SN74LS258	74LS258
SN74LS258AN	74LS258
SN74LS258N	74LS258
SN74LS259N	74LS259
SN74LS259W	74LS259
SN74LS260	74LS260
SN74LS260N	74LS260
SN74LS260ND	74LS260
SN74LS266N	74LS266
SN74LS266W	74LS266
SN74LS273N	74LS273
SN74LS279	74LS279
SN74LS279N	74LS279
SN74LS280N	74LS280
SN74LS280W	74LS280
SN74LS283	74LS283
SN74LS283N	74LS283
SN74LS290	74LS290
SN74LS290N	74LS290
SN74LS293	74LS293
SN74LS293N	74LS293
SN74LS295	74LS295A
SN74LS295A	74LS295A
SN74LS295AN	74LS295A
SN74LS295N	74LS295A
SN74LS298N	74LS298
SN74LS299N	74LS299
SN74LS348N	74LS348
SN74LS353N	74LS353
SN74LS365A	74LS365A
SN74LS365AN	74LS365A
SN74LS365N	74LS365A
SN74LS366	74LS366A
SN74LS366AN	74LS366A
SN74LS366N	74LS366A
SN74LS367	74LS367
SN74LS367AJ	74LS367
SN74LS367AN	74LS367
SN74LS367AN-X	74LS367
SN74LS367N	74LS367
SN74LS368	74LS368
SN74LS368AN	74LS368
SN74LS373	74LS373
SN74LS373J	74LS373
SN74LS373N	74LS373
SN74LS374	74LS374
SN74LS374AN	74LS374
SN74LS374N	74LS374
SN74LS377N	74LS377
SN74LS378	74LS378
SN74LS378N	74LS378
SN74LS379	74LS379
SN74LS379J	74LS379
SN74LS379N	74LS379
SN74LS386N	74LS386
SN74LS390	74LS390
SN74LS390N	74LS390
SN74LS393	74LS393
SN74LS393N	74LS393
SN74LS395AJ	74LS395A
SN74LS395AN	74LS395A
SN74LS395N	74LS395A
SN74LS398	74LS398
SN74LS398N	74LS398
SN74LS399	74LS399
SN74LS399N	74LS399
SN74LS490	74LS490
SN74LS490N	74LS490
SN74LS540N	74LS540
SN74LS541N	74LS541
SN74LS624J	74LS624
SN74LS624N	74LS624
SN74LS625J	74LS625
SN74LS625N	74LS625
SN74LS626J	74LS626
SN74LS626N	74LS626
SN74LS627	74LS627
SN74LS627J	74LS627
SN74LS627N	74LS627
SN74LS629J	74LS629
SN74LS629N	74LS629
SN74LS640N	74LS640
SN74LS641N	74LS641
SN74LS642N	74LS642
SN74LS643N	74LS643
SN74LS645J	74LS645
SN74LS645N	74LS645
SN74LS670	74LS670
SN74LS670N	74LS670
SN74S00J	74S00
SN74S00N	74S00
SN74S02J	74S02
SN74S02N	74S02
SN74S03J	74S03
SN74S03N	74S03
SN74S04N	74S04
SN74S05N	74S05
SN74S08J	74S08
SN74S08N	74S08
SN74S09J	74S09
SN74S09N	74S09
SN74S10J	74S10
SN74S10N	74S10
SN74S10NN	74S10
SN74S11	74S11
SN74S11J	74S11
SN74S11N	74S11
SN74S15	74S15
SN74S15J	74S15
SN74S15N	74S15
SN74S20	74S20
SN74S20J	74S20
SN74S20N	74S20
SN74S22J	74S22
SN74S22N	74S22
SN74S30J	74S30
SN74S30N	74S30
SN74S37N	74S37
SN74S38N	74S38
SN74S40J	74S40
SN74S40N	74S40
SN74S51J	74S51
SN74S51N	74S51
SN74S64J	74S64
SN74S64N	74S64
SN74S65J	74S65
SN74S65N	74S65
SN74S74J	74S74
SN74S74N	74S74
SN74S86	74LS86
SN74S86J	74S86
SN74S86N	74S86
SN74S112J	74S112
SN74S112N	74S112
SN74S113J	74S113
SN74S113N	74S113
SN74S114J	74S114
SN74S114N	74S114
SN74S124J	74S124
SN74S124N	74S124
SN74S132N	74S132
SN74S133N	74S133
SN74S134J	74S134
SN74S134N	74S134
SN74S138J	74S138
SN74S138N	74S138
SN74S140J	74S140
SN74S140N	74S140
SN74S151J	74S151
SN74S151N	74S151
SN74S153N	74S153
SN74S157J	74S157
SN74S157N	74S157
SN74S158J	74S158
SN74S158N	74S158
SN74S163	74S163
SN74S174N	74S174
SN74S175J	74S175
SN74S175N	74S175
SN74S181J	74S181
SN74S181N	74S181
SN74S182N	74S182
SN74S189	74S189
SN74S189A	74S189
SN74S189J	74S189
SN74S189N	74S189
SN74S194J	74S194
SN74S194N	74S194
SN74S221	74LS04
SN74S251J	74S251
SN74S251N	74S251
SN74S258J	74S258
SN74S258N	74S258
SN74S260N	74S260
SN74S280N	74S280
SN74S374	74S374
SN74S412N	8212
SN80	101
SN84H87N	74H87
SN84H183N	74H183
SN166	128
SN167	128
SN238S	749
SN360	1223
SN713A	3052
SN714	3065
SN716	3056
SN962-2M	9962
SN4448	519
SN7400	7400
SN7400A	7400
SN7400J	7400
SN7400N	7400
SN7400N-10	7400
SN7401	7401
SN7401J	7401
SN7401N	7401
SN7402	7402
SN7402J	7402
SN7402N	7402
SN7402N-10	7402
SN7403	7403
SN7403J	7403
SN7403N	7403
SN7404	7404
SN7404N	7404
SN7404N-10	7404
SN7405	7405
SN7405A	7405
SN7405N	7405
SN7406	7406
SN7406N	7406
SN7406N-10	7406
SN7407	7407
SN7407N	7407
SN7408J	7408
SN7408N	7408
SN7408N-10	7408
SN7409J	7409
SN7409N	7409
SN7410J	7410
SN7410N	7410
SN7410N-10	7410
SN7411N	7411
SN7412J	7412
SN7412N	7412
SN7412W	7412
SN7413	7413
SN7413N	7413
SN7413N-10	7413
SN7414N	7414
SN7416	7416
SN7416N	7416
SN7417N	7417
SN7420	7420
SN7420J	7420
SN7420N	7420
SN7420N-10	7420
SN7421N	7421
SN7422	7422
SN7422J	7422
SN7422N	7422
SN7423J	7423
SN7423N	7423
SN7425J	7425
SN7425N	7425
SN7426	7426
SN7426J	7426
SN7426N	7426
SN7427	7427
SN7427J	7427
SN7427N	7427
SN7427N-10	7427
SN7428J	7428
SN7428N	7428
SN7430	7430
SN7430J	7430
SN7430N	7430
SN7432	7432
SN7432J	7432
SN7432N	7432
SN7432N-10	7432
SN7433J	7433
SN7433N	7433
SN7437	7437
SN7437J	7437
SN7437N	7437
SN7438	7438
SN7438J	7438
SN7438N	7438
SN7439	7439
SN7439N	7439
SN7440	7440
SN7440J	7440
SN7440N	7440
SN7441N-10	7441
SN7442AJ	7442
SN7442AN	7442
SN7442N	7442
SN7443AJ	7443
SN7443AN	7443
SN7443N	7443
SN7444AJ	7444
SN7444AN	7444
SN7444N	7444
SN7445J	7445
SN7445N	7445
SN7446AJ	7446
SN7446AN	7446
SN7446N	7446
SN7447	7447
SN7447AJ	7447
SN7447AN	7447
SN7447J	7447
SN7447N	7447
SN7447N-10	7447
SN7448	7448
SN7448J	7448
SN7448N	7448
SN7448N-10	7448
SN7450	7450
SN7450J	7450
SN7450N	7450
SN7451	7451
SN7451J	7451
SN7451N	7451
SN7451N-10	7451
SN7453	7453
SN7453J	7453
SN7453N	7453
SN7454	7454
SN7454J	7454
SN7454N	7454
SN7460J	7460
SN7460N	7460
SN7470	7470
SN7470J	7470
SN7470N	7470
SN7472	7472
SN7472J	7472
SN7472N	7472
SN7473	7473
SN7473J	7473
SN7473N	7473
SN7473N-10	7473
SN7474	7474
SN7474J	7474
SN7474M	7474
SN7474N	7474
SN7474N-10	7474
SN7475	7475
SN7475J	7475
SN7475N	7475
SN7475N-10	7475
SN7476B	7476
SN7476J	7476
SN7476N	7476
SN7476N-10	7476
SN7480J	7480
SN7480N	7480
SN7482	7480
SN7482J	7482
SN7482N	7482
SN7483	7483
SN7483AN	7483
SN7483N	7483
SN7485	7485
SN7485J	7485
SN7485N	7485
SN7485N-10	7485
SN7486J	7486
SN7486N	7486
SN7486N-10	7486
SN7489N	7489
SN7490AJ	7490
SN7490AN	7490
SN7490N	7490
SN7490N-10	7490
SN7491AN	7491
SN7491N	7491
SN7492AJ	7492
SN7492AN	7492
SN7492N	7492
SN7492N-10	7492
SN7493	7493A
SN7493AJ	7493A
SN7493AN	7493A
SN7493N	7493A
SN7494N	7494
SN7495AN	7495
SN7495N	7495
SN7496N	7496
SN7497	7497
SN7497J	7497
SN7497N	7497
SN7610N-07	722
SN8400N	7400
SN8401N	7401
SN8402N	7402
SN8403N	7403
SN8404N	7404
SN8405N	7405
SN8406N	7406
SN8407N	7407
SN8408N	7408
SN8409N	7409
SN8410N	7410
SN8412N	7412
SN8413N	7413
SN8414N	7414
SN8416N	7416
SN8417	7417
SN8420N	7420
SN8422N	7422
SN8425N	7425
SN8426N	7426
SN8427N	7427
SN8428N	7428
SN8430N	7430
SN8432N	7432
SN8438N	7438
SN8439N	7439
SN8440N	7440
SN8441N	7441
SN8442N	7442
SN8443N	7443
SN8444N	7444
SN8445N	7445
SN8446AN	7446
SN8446N	7446
SN8447AN	7447
SN8447N	7447
SN8448N	7448
SN8450N	7450
SN8451N	7451
SN8453N	7453
SN8454N	7454
SN8460N	7460
SN8470N	7470
SN8472N	7472
SN8473N	7473
SN8474N	7474
SN8475N	7475
SN8476N	7476
SN8480N	7480
SN8482N	7482
SN8483N	7483
SN8485N	7485
SN8486N	7486
SN8489N	7489
SN8490AN	7490
SN8491AN	7491
SN8492AN	7492
SN8493AN	7493A
SN8494N	7494
SN8495AN	7495
SN8496N	7496
SN15370J	9370
SN15370N	9370
SN15830J	9930
SN15830N	9930
SN15832	9932
SN15832J	9932
SN15832N	9932
SN15833J	9933
SN15833N	9933
SN15835J	9935
SN15835N	9935
SN15836J	9936
SN15836N	9936
SN15837J	9937
SN15837N	9937
SN15838J	9135
SN15838N	9135
SN15844J	9944
SN15844N	9944
SN15845J	9945
SN15845N	9945
SN15846J	9946
SN15846N	9946
SN15848J	9948
SN15848N	9948
SN15849J	9949
SN15849N	9949
SN15850J	9950
SN15850N	9950
SN15851J	9951
SN15851N	9951
SN15857J	9157
SN15857N	9157
SN15858J	9158
SN15858N	9158
SN15861J	9961
SN15861N	9961
SN15862J	9962
SN15862N	9962
SN15863J	9963
SN15863N	9963
SN52101AL	1171
SN52101L	1171
SN52301	923D
SN52723N	923D
SN52741	941
SN52741L	941
SN52741P	941
SN52747L	947
SN72258LP	911
SN72301	975
SN72301AL	1171
SN72301AN	1171
SN72301AP	975
SN72307	976
SN72307JA	976
SN72307JP	976
SN72307N	976
SN72307P	976
SN72471P	941M
SN72555JP	955M
SN72555P	955M
SN72558L	911
SN72709	909D
SN72709L	909

PART NUMBER	NTE REPLACEMENT
SN72709N	909D
SN72710L	910
SN72710N	910D
SN72711L	911
SN72723N	923
SN72741L	941
SN72741N	941D
SN72741P	941M
SN72747	947
SN72747J	947D
SN72747JA	947D
SN72747N	947D
SN72748JG	975
SN72905	960
SN72906	962
SN72908	964
SN72912	966
SN72915	968
SN72924	972
SN74100	74100
SN74100N	74100
SN74105N	74105
SN74107N	74107
SN74109	74109
SN74109N	74109
SN74111	74111
SN74111N	74111
SN74116	8308
SN74116N	8308
SN74120	74120
SN74120N	74120
SN74121N	74121
SN74122	74122
SN74122N	74122
SN74123	74123
SN74123N	74123
SN74123N-10	74123
SN74125N	74125
SN74126N	74126
SN74128	74128
SN74128N	74128
SN74132N	74132
SN74136J	74136
SN74136N	74136
SN74141N	74141
SN74145	74145
SN74145N	74145
SN74145N-10	74145
SN74147J	74147
SN74147N	74147
SN74148N	74148
SN74150	74150
SN74150N	74150
SN74150N-10	74150
SN74151	74151
SN74151AN	74151
SN74151N	74151
SN74152N	74152
SN74153	74153
SN74153N	74153
SN74154	74154
SN74154N	74154
SN74154N-10	74154
SN74155N	74155
SN74156N	74156
SN74157	74157
SN74157J	74157
SN74157N	74157
SN74160	74160
SN74160N	74160
SN74161	74161
SN74161N	74161
SN74162N	74162
SN74163N	74163
SN74164N	74164
SN74165	74165
SN74165N	74165
SN74166	74166
SN74166N	74166
SN74170	74170
SN74170N	74170
SN74173N	74173
SN74174	74174
SN74174N	74174
SN74175N	74175
SN74176N	74176
SN74177N	74177
SN74178N	74178
SN74179N	74179
SN74180N	74180
SN74181	74181
SN74181N	74181
SN74182N	74182
SN74185N	74185
SN74190N	74190
SN74191N	74191
SN74192	74192
SN74192N	74192
SN74192N-10	74192
SN74193N	74193
SN74193N-10	74193
SN74195N	74195
SN74196	74196
SN74196J	74196
SN74196N	74196
SN74196N-10	74196
SN74197N	74197
SN74198N	74198
SN74199	74199
SN74199N	74199
SN74221J	74221
SN74221N	74221
SN74251N	74251
SN74279N	74279
SN74298	74298
SN74298N	74298
SN74365AJ	74365
SN74365AN	74365
SN74365J	74365
SN74365N	74365
SN74366AJ	74366
SN74366AN	74366
SN74366J	74366
SN74366N	74366
SN74367AJ	74367
SN74367AN	74367
SN74367J	74367
SN74367N	74367
SN74368AJ	74368
SN74368AN	74368
SN74368J	74368
SN74368N	74368
SN74376	74376
SN74376N	74376
SN74390J	74390
SN74390N	74390
SN74393	74393
SN74393J	74393
SN74393N	74393
SN74490J	74490
SN74490N	74490
SN74504N	74S04
SN75064NE	2085
SN75065NE	2085
SN75066NE	2086
SN75067NE	2086
SN75068NE	2087
SN75069NE	2087
SN75188	75188
SN75188J	75188
SN75188N	75188
SN75189	75189
SN75189AN	75189
SN75189N	75189
SN75450AN	75450B
SN75450B	75450B
SN75450BN	75450B
SN75450N	75450B
SN75451AN	75451B
SN75451B	75451B
SN75451BN	75451B
SN75451BP	75451B
SN75451N	75451B
SN75452AN	75452B
SN75452B	75452B
SN75452BN	75452B
SN75452BP	75452B
SN75452N	75452B
SN75452P	75452B
SN75453AN	75453B
SN75453B	75453B
SN75453BN	75453B
SN75453BP	75453B
SN75453N	75453B
SN75454AN	75454B
SN75454B	75454B
SN75454BN	75454B
SN75454N	75454B
SN75466	2011
SN75466N	2011
SN75467	2012
SN75467N	2012
SN75468	2013
SN75468N	2013
SN75469	2014
SN75469N	2014
SN75476	2011
SN75476N	2011
SN75477	2012
SN75477N	2012
SN75478N	2013
SN75480	2028
SN75480J	2028
SN75480N	2028
SN75491AN	75491B
SN75491B	75491B
SN75491BN	75491B
SN75491N	75491B
SN75492AN	75492B
SN75492B	75492B
SN75492BN	75492B
SN75492N	75492B
SN75493	75493
SN75493N	75493
SN75494	75494
SN75494N	75494
SN76007	812
SN76007N	812
SN76008	746
SN76107N	722
SN76110	722
SN76110N	722
SN76115	801
SN76115N	801
SN76131	725
SN76242	714
SN76242N	714
SN76242N-07	714
SN76298	738
SN76530P	747
SN76550	615P
SN76564	783
SN76564N	783
SN76591P	815
SN76600	746
SN76600N	746
SN76600P	746
SN76642	709
SN76642N	709
SN76642P	709
SN76643A	708
SN76643N	708
SN76650	749
SN76650N	749
SN76653N	708
SN76664N	712
SN76665	712
SN76665N	712
SN76666	712
SN76666N	712
SN76675	749
SN76675N	723
SN76678	736
SN76689	788
SN76689N	788
SN84107N	74107
SN84109N	74109
SN84110N	74110
SN84111N	74111
SN84121N	74121
SN84122N	74122
SN84123N	74123
SN84125N	74125
SN84126N	74126
SN84128N	74128
SN84132N	74132
SN84141N	74141
SN84145N	74145
SN84150N	74150
SN84151N	74151
SN84153N	74153
SN84154N	74154
SN84155N	74155
SN84156N	74156
SN84160N	74160
SN84161N	74161
SN84162N	74162
SN84163N	74163
SN84165N	74165
SN84166N	74166
SN84170N	74170
SN84174N	74174
SN84175N	74175
SN84176N	74176
SN84177N	74177
SN84178N	74178
SN84179N	74179
SN84180N	74180
SN84181N	74181
SN84182N	74182
SN84190N	74190
SN84191N	74191
SN84192N	74192
SN84193N	74193
SN84195N	74195
SN84196N	74196
SN84197N	74197
SN84198N	74198
SN84199N	74199
SN99695P	75452B
SN151800J	9800
SN151800N	9800
SN151801J	9801
SN151801N	9801
SN151802J	9802
SN151802N	9802
SN151803J	9803
SN151803N	9803
SN151804J	9804
SN151804N	9804
SN151805J	9805
SN151805N	9805
SN151806J	9806
SN151806N	9806
SN151807J	9807
SN151807N	9807
SN151808J	9808
SN151808N	9808
SN151809J	9809
SN151809N	9809
SN151810J	9810
SN151810N	9810
SN151811J	9811
SN151811N	9811
SN151812J	9812
SN151812N	9812
SN158093J	9093
SN158093N	9093
SN158094J	9094
SN158094N	9094
SN158097J	9097
SN158097N	9097
SN158099J	9099
SN158099N	9099
SN766008	746
SN766110	722
SN-1	116
SN-1Z	116
SN-400-319-P1	159
SN-7426	7426
SN-7474	7474
SN-76666N	712
SNM75491BN	75491B
SNO303	116
SNR-7A130K	1V130
SNR-7A150K	1V150
SNR-7A250K	1V250
SNR-7D18L	1V010
SNR-7D22L	1V014
SNR-7D24L	1V015
SNR-7D33K	1V020
SNR-7D56K	1V035
SNR-7D82K	1V050
SNR-14A115K	1V115
SNR-14A130K	2V130
SNR-14A150K	2V150
SNR-14A250K	2V250
SNR-14A480K	2V480
SNR-14D18L	2V010
SNR-14D22L	2V014
SNR-14D24L	2V015
SNR-14D27L	2V017
SNR-14D33K	2V020
SNR-14D82K	2V050
SNR-20A150K	524V15
SNR-A130L2	1V130
SNR-A130L10	2V130
SNR-A150L2	1V150
SNR-A150L10	2V150
SNR-A150L20	524V15
SNR-A250L4	1V250
SNR-A250L20	2V250
SNR-A480L40	2V480
SNR-D18M1	1V010
SNR-D18M3	2V010
SNR-D22L1	1V014
SNR-D22L3	2V014
SNR-D24K1	1V015
SNR-D24K4	2V015
SNR-D27L1	1V017
SNR-D27L4	2V017
SNR-D33K1	1V020
SNR-D33K5	2V020
SNR-D56K2	1V035
SNR-D56K8	2V035
SNR-D82K2	1V050
SNR-D82K12	2V050
SNR-D180K1	1V115
SNR-D180K10	2V115
SNT204	159
SNT204A	159
SNW-Q-1	102
SNW-Q-2	103
SNW-Q-3	103
SNW-Q-4	102
SNW-Q-5	103
SNW-Q-6	102
SO1	160
SO2	160
SO3	160
SO5	116
SO10G	125
SO25	102A
SO30F2	5452
SO46	110MP
SO65	102A
SO65A	126
SO88	102A
SO301L	5417
SO301LS1	5426
SO301LS2	5426
SO301LS3	5426
SO303L	5417
SO303LS2	5426
SO303LS3	5426
SO304F1	5452
SO304F3	5452
SO304F4	5452
SO306L	5417
SO306LS3	5426
SO308L	5417
SO308LS2	5426
SO308LS3	5426
SO310L	5417
SO310LS3	5426
SO325C	5534
SO325G	5534
SO501	116
SO501L	5417
SO501LS1	5426
SO501LS2	5426
SO501LS3	5426
SO503LS1	5426
SO503LS2	5426
SO503LS3	5426
SO504F1	5453
SO504F2	5453
SO504F3	5453
SO504F4	5453
SO506LS2	5426
SO506LS3	5426
SO508L	5417
SO508LS2	5426
SO508LS3	5426
SO510L	5417
SO510LS2	5426
SO510LS3	5426
SO525C	5534
SO525G	5534
SO535C	5534
SO19806	199
SO25094	199
SO-1	160
SO-2	160
SO-3	160
SO-25	102A
SO-65A	160
SO-88	102A
SO-632	139A
SOA	125
SOD20AS	5944
SOD20BS	5940
SOD30AL	5800
SOD30AS	5940
SOD30BL	5800
SOD30BS	5940
SOD30CS	5940
SOD30DL	5800
SOD30DS	5940
SOD50AL	5800
SOD50AS	5940
SOD50BL	5800
SOD50BS	5940
SOD50CL	5800
SOD50DL	5800
SOD50DS	5940
SOD100AL	5802
SOD100AS	5944
SOD100BL	5802
SOD100BS	5944
SOD100CL	5802
SOD100CS	5944
SOD100DS	5802
SOD200AL	5802
SOD200BL	5802
SOD200BS	5944
SOD200CL	5802
SOD200CS	5944
SOD200D	116
SOD200DL	5802
SOD200DS	5944
SOD-200D	156
SOS0121	129
SOS0121	129
SP1	116
SP1K	117
SP1K-1	116
SP1K-2	116
SP1U-2	116
SP2	100
SP3	121
SP4	105
SP6	101
SP6GC1	113A
SP7	101
SP9	160
SP10	123AP
SP11	107
SP12	124
SP13MP	121MP
SP14	130
SP15MP	130MP
SP16	121
SP17	123A
SP18	128
SP26	104
SP34AS	109
SP39	127
SP44UD	104
SP44US	104
SP47	104
SP60	109
SP62	127
SP70	159
SP82	112
SP82A	112
SP89UG	121
SP90	159
SP101	177
SP148-3	121
SP176	104
SP180CI	904
SP230	104
SP295	109
SP334	121
SP404	121
SP404T	121
SP441	121
SP441D	104
SP441G	121
SP441S	104
SP485	121
SP485B	121
SP485BLK	121
SP485BLU	121
SP485BRN	121
SP485W	121
SP485WHT	121
SP486	104
SP486W	121
SP486WHT	121
SP500	1288
SP600	1396
SP634	121
SP649	121
SP649-1	121
SP744	121
SP819R	121
SP834	121
SP838	179
SP838-1	179
SP875	121
SP880	104
SP880-1	121
SP880-3	121
SP891	104
SP891-B	104
SP891B	121
SP891BLU	121
SP891G	121
SP891GRN	121
SP891R	121
SP891W	121
SP891WHT	121
SP1013A	121
SP1013B	104
SP1029	179
SP1081	213
SP1105	213
SP1108	104
SP1118	121
SP1137	104
SP1271	121
SP1273	121
SP1278	176
SP1323	104
SP1403	104
SP1481	121
SP1481-1	121
SP1481-2	121
SP1481-3	121
SP1481-4	121
SP1481-5	121
SP1482	121
SP1482-2	121
SP1482-3	121
SP1482-4	121
SP1482-5	121
SP1482-6	121
SP1482-7	121
SP1483	121
SP1483-1	121
SP1483-2	121
SP1483-3	121
SP1484	121
SP1484-1	179
SP1484-2	179
SP1484-3	179
SP1484-4	179
SP1484-5	179
SP1550-3	121
SP1556	121
SP1556-1	121
SP1556-2	121
SP1556-3	121
SP1556-4	121
SP1563-2	121
SP1595BLK	121
SP1595BLU	121
SP1595GRN	121
SP1595RED	121
SP1596BLK	121
SP1596BLU	121
SP1596GRN	121
SP1596RED	121
SP1600	104
SP1603	121
SP1603-1	121
SP1603-2	121
SP1603-3	121
SP1619	104
SP1650	179
SP1651	104
SP1657	121
SP1742	127
SP1801	121
SP1817	179
SP1844	121
SP1927	104
SP1938	121
SP1950	121
SP1994	213
SP2045	121
SP2046	121
SP2048	121
SP2072	121
SP2076	121
SP2077	179
SP2094	121
SP2155	121
SP2158	103A
SP2188	103A
SP2234	104
SP2247	104
SP2292	123AP
SP2320K1	330
SP2330K2	330
SP2341	121
SP2358	104
SP2361	121
SP2361BLU	121
SP2361BRN	121
SP2361GRN	121
SP2361ORN	121
SP2361RED	121
SP2361YEL	121
SP2395	121
SP2411	127
SP2426	105
SP2431	104
SP2431P	105
SP2493	121
SP2512	127
SP2541	121
SP2551	131
SP2610	179
SP2708	179
SP3003	102A
SP3004	102A
SP3005	100
SP3006	160
SP3007	160
SP3008	126
SP3009	121
SP3010	103A
SP3011	101
SP3012	105
SP3013	121MP
SP3014	121
SP3015	121MP
SP3016	116
SP3017A	117
SP3018	108
SP3019	108
SP3020	123
SP3021	124
SP3024	128
SP3025	129
SP3026	175
SP3027	130
SP3030	116
SP3032	125
SP3033	125
SP3035	127
SP3036	281
SP3038	123AP
SP3039	316
SP3040	154
SP3041	152
SP3042	230
SP3044	154
SP3045	225
SP3046	123AP
SP3047	128
SP3048	329
SP3049	224
SP3050	221
SP3051	156
SP3052	131
SP3053	191
SP3054	196
SP3055	134A
SP3056	135A
SP3057	136A
SP3058	137A
SP3059	138A
SP3060	139A
SP3061	140A
SP3062	142A
SP3063	145A
SP3064	146A
SP3065	222
SP3066	118
SP3068	503
SP3079	162
SP3080	125
SP3081	125
SP3082	226
SP3083	197
SP3084	197
SP3085	197
SP3086	226MP
SP3087	109
SP3088	109
SP3089	112
SP3090	109
SP3091	109
SP3092	141A
SP3094	144A
SP3095	147A
SP3096	330
SP3096(ZENER)	145A
SP3097	149A
SP3098	150A
SP3099	151A
SP3100	503
SP3103	330
SP3105	166
SP3106	5304
SP3112	133
SP3114	290
SP3116	133
SP3117	108
SP3118	106
SP3119	113A
SP3122	123AP
SP3500	5882
SP3501	5994
SP3502	5511
SP3504	5508
SP3505	5547
SP3508	5675
SP3510	130
SP3511	181
SP3512	128
SP3513	129
SP3515	5805
SP3516	5846
SP4168	108
SP4231	130
SP4436	161
SP7056	171
SP8400	154
SP8401	154
SP8402	192
SP8416	152
SP8660	152
SP8916	184
SP8918	184
SP12271	106
SP-1	116
SP-1.5A	5800
SP-70	198
SP-89RW	121
SP-116	612
SP-148-3	121
SP-404T	121
SP-441	121
SP-485	121
SP-486	121
SP-486W	121
SP-634	121
SP-649	121
SP-649-1	121
SP-834	121
SP-880	121
SP-880-1	121

PART NUMBER	NTE REPLACEMENT
SP-880-3	121
SP-891	121
SP-891B	121
SP-891W	121
SP-1108	121
SP-1278	121
SP-1482-5	121
SP-1483	121
SP-1484	121
SP-1556-2	121
SP-1603	121
SP-1603-1	121
SP-1603-2	121
SP-2158	124
SP-8660	184
SPC40	123AP
SPC42	123AP
SPC50	123AP
SPC51	123AP
SPC52	123AP
SPC430	283
SPC431	283
SPC40411	181
SPD2005	6006
SPD2010	6006
SPD2020	6006
SPD-80059	181
SPD-80060	181
SPD-80061	181
SPD-80062	130
SPD-80123	128
SPF024	133
SPF215	222
SPF274	222
SPF512	222
SPF530	229
SPF609	222
SPN01	116
SPN-01	116
SPR10	587
SPR11	587
SPR12	587
SPR32	588
SPR50	577
SPR51	577
SPR52	577
SPR80	597
SPR81	597
SPR82	597
SPR160	6244
SPR160A	6244
SPR161	6244
SPR161A	6244
SPR162	6244
SPR162A	6244
SPS0121	129
SPS0122	128
SPS4	108
SPS12	159
SPS20	108
SPS22	159
SPS38	108
SPS40	108
SPS41	123AP
SPS42	159
SPS42A	159
SPS43-1	107
SPS47	159
SPS49	128
SPS91	121
SPS220	108
SPS225	5524
SPS401K	159
SPS428	108
SPS429	107
SPS477	123AP
SPS514	159
SPS514A	159
SPS627	123AP
SPS667	229
SPS668	159
SPS699	123AP
SPS761	288
SPS816	107
SPS817	123AP
SPS817N	123AP
SPS837	189
SPS856	107
SPS860	107
SPS868	123AP
SPS871	126
SPS906	161
SPS907	123AP
SPS915	108
SPS917	108
SPS918	123AP
SPS919	161
SPS920	229
SPS952	199
SPS986	189
SPS1045	123AP
SPS1062	123AP
SPS1097	159
SPS1097A	159
SPS1107	188
SPS1351	108
SPS1352	108
SPS1353	108
SPS1436	152
SPS1437	153
SPS1475	123AP
SPS1523	159
SPS1523A	159
SPS1593WT	159
SPS1761	188
SPS1762	189
SPS1802	123AP
SPS1817	123AP
SPS1846	229
SPS1977	123AP
SPS2104	123AP
SPS2110	108
SPS2111	108
SPS2129	123AP
SPS2130	128
SPS2131	129
SPS2134	194
SPS2135	108
SPS2142	123AP
SPS2164	123AP
SPS2167	107
SPS2168	107
SPS2194	123AP
SPS2216	199
SPS2217	199
SPS2224	108
SPS2225	123AP
SPS2226	129
SPS2265	108
SPS2265-2	108
SPS2266	108
SPS2269	159
SPS2270	123AP
SPS2271	199
SPS2272	159
SPS2274	159
SPS2279	159
SPS2292	123AP
SPS2293	123AP
SPS2294	159
SPS2297	159
SPS2320	108
SPS2323	272
SPS2415	123AP
SPS2425	107
SPS2526	106
SPS2664	108
SPS3003	108
SPS3015	123AP
SPS3329	159
SPS3370	108
SPS3391	123AP
SPS3724	159
SPS3724A	159
SPS3735	123AP
SPS3751	123AP
SPS3786	159
SPS3786A	159
SPS3787	107
SPS3900	123AP
SPS3907	123AP
SPS3908	123AP
SPS3909	123AP
SPS3912	128
SPS3914	128
SPS3915	123AP
SPS3923	123AP
SPS3924	159
SPS3924A	159
SPS3925	123AP
SPS3926	123AP
SPS3927	159
SPS3927A	159
SPS3929	108
SPS3930	123AP
SPS3931	159
SPS3931A	159
SPS3936	123AP
SPS3937	108
SPS3938	123AP
SPS3940	123AP
SPS3948	108
SPS3951	123AP
SPS3952	108
SPS3957C	123AP
SPS3967	123AP
SPS3968	108
SPS3971	108
SPS3972	123AP
SPS3973	123AP
SPS3987	159
SPS3988	159
SPS3988A	159
SPS3990	159
SPS3990A	159
SPS3999	123AP
SPS4000	159
SPS4002	108
SPS4003	123AP
SPS4004	123AP
SPS4005	108
SPS4006	123AP
SPS4007	159
SPS4007A	159
SPS4008	108
SPS4009	123AP
SPS4010	129
SPS4013	159
SPS4013A	159
SPS4014	159
SPS4014A	159
SPS4016	108
SPS4017	123AP
SPS4018	159
SPS4018A	159
SPS4019	159
SPS4019A	159
SPS4020	123AP
SPS4025	159
SPS4025A	159
SPS4026	159
SPS4026A	159
SPS4027	159
SPS4027A	159
SPS4028	159
SPS4028A	159
SPS4029	123AP
SPS4030	108
SPS4031	159
SPS4031A	159
SPS4032	123AP
SPS4034	123AP
SPS4035	123AP
SPS4036	123AP
SPS4037	123AP
SPS4038	128
SPS4039	123AP
SPS4040	123AP
SPS4041	123AP
SPS4042	123AP
SPS4043	108
SPS4044	123AP
SPS4045	123AP
SPS4049	123AP
SPS4050	108
SPS4051	108
SPS4052	123AP
SPS4053	123AP
SPS4054	159
SPS4054A	159
SPS4055	123AP
SPS4056	159
SPS4056A	159
SPS4059	123AP
SPS4060	123AP
SPS4061	123AP
SPS4062	123AP
SPS4063	123AP
SPS4064	159
SPS4064A	159
SPS4066	123AP
SPS4067	123AP
SPS4068	108
SPS4069	123AP
SPS4072	159
SPS4072A	159
SPS4073	159
SPS4073A	159
SPS4074	123AP
SPS4075	123AP
SPS4076	159
SPS4076A	159
SPS4077	123AP
SPS4078	159
SPS4078A	159
SPS4079	108
SPS4080	108
SPS4081	123AP
SPS4082	159
SPS4082A	159
SPS4083	123AP
SPS4084	123AP
SPS4085	123AP
SPS4086	159
SPS4086A	159
SPS4087	159
SPS4087A	159
SPS4088	123AP
SPS4089	123AP
SPS4090	159
SPS4090A	159
SPS4091	108
SPS4092	211
SPS4095	123AP
SPS4099	189
SPS4143	107
SPS4145	108
SPS4167	108
SPS4168	107
SPS4169	123AP
SPS4199	123AP
SPS4236	123AP
SPS4237	185
SPS4272	199
SPS4300	128
SPS4301	129
SPS4302	159
SPS4303	123AP
SPS4309	128
SPS4310	129
SPS4311	128
SPS4312	129
SPS4313	123AP
SPS4314	159
SPS4314A	159
SPS4330	159
SPS4331	229
SPS4338	159
SPS4343	161
SPS4344	123AP
SPS4345	123AP
SPS4347	123AP
SPS4348	159
SPS4348A	159
SPS4354	159
SPS4354A	159
SPS4355	159
SPS4356	123AP
SPS4357	159
SPS4359	123AP
SPS4360	123AP
SPS4361	128
SPS4363	123AP
SPS4365	159
SPS4365A	159
SPS4367	123AP
SPS4368	123AP
SPS4382	123AP
SPS4390	123AP
SPS4391	128
SPS4392	123AP
SPS4397	159
SPS4399	108
SPS4401	106
SPS4423	108
SPS4436	229
SPS4443	123AP
SPS4446	123AP
SPS4450	123AP
SPS4451	123AP
SPS4452	159
SPS4452A	159
SPS4453	123AP
SPS4455	123AP
SPS4456	123AP
SPS4457	123AP
SPS4458	159
SPS4458A	159
SPS4459	123AP
SPS4460	159
SPS4460A	159
SPS4461	128
SPS4462	129
SPS4472	123AP
SPS4473	159
SPS4473A	159
SPS4476	123AP
SPS4477	129
SPS4478	123AP
SPS4480	159
SPS4480A	159
SPS4489	159
SPS4489A	159
SPS4490	128
SPS4491	123AP
SPS4492	129
SPS4493	123AP
SPS4494	123AP
SPS4495	128
SPS4497	129
SPS4498	123AP
SPS4610	108
SPS4813	159
SPS4814	199
SPS4815	159
SPS4920	123AP
SPS4942	123AP
SPS5000	123AP
SPS5006	123AP
SPS5006-1	123AP
SPS5006-2	123AP
SPS5007	159
SPS5007-1	159
SPS5007-1A	159
SPS5007-2	159
SPS5007-2A	159
SPS5007A	159
SPS5008	159
SPS5328	160
SPS5450	194
SPS5451	292
SPS5457	123AP
SPS5458	159
SPS5569	107
SPS5679	159
SPS5809	128
SPS6109	159
SPS6109A	159
SPS6111	123AP
SPS6112	123AP
SPS6113	123AP
SPS6124	128
SPS6125	129
SPS6155	108
SPS6185	190
SPS6571	123AP
SPS6682	108
SPS6700	288
SPS6953	159
SPS7127	229
SPS7314	108
SPS7353	229
SPS7359	123AP
SPS7652	123AP
SPS8355	159
SPS8777	108
SPS-0121	129
SPS-0122	128
SPS-29	129
SPS-41	123AP
SPS-856	107
SPS-860	107
SPS-917	108
SPS-934	123AP
SPS-952	159
SPS-952-2	319P
SPS-1351	108
SPS-1352	108
SPS-1353	108
SPS-1473	108
SPS-1473RT	107
SPS-1475	123AP
SPS-1475YT	123AP
SPS-1476	199
SPS-1539	159
SPS-1539WT	159
SPS-2111	108
SPS-2265	107
SPS-2266	107
SPS-2320	108
SPS-4075	123AP
SPS-4076	129
SPS-4077	128
SPS-4078	129
SPS-4145	108
SPS-4396	123AP
SPS-4423	108
SPS-6682	229
SPS-7976	229
SPT010	5673
SPT010A	5673
SPT010AB	5673
SPT010B	5673
SPT010BC	5673
SPT010C	5673
SPT030	5693
SPT030A	5693
SPT030AB	5693
SPT030B	5693
SPT030BC	5693
SPT030C	5693
SPT040	5693
SPT040A	5693
SPT040AB	5693
SPT040B	5693
SPT040BC	5693
SPT040C	5693
SPT08	5673
SPT015	5673
SPT015A	5673
SPT015AB	5673
SPT015B	5673
SPT015BC	5673
SPT015C	5673
SPT025	5681
SPT025A	5681
SPT025AB	5681
SPT025B	5681
SPT025BC	5681
SPT025C	5681
SPT18	5673
SPT28	5673
SPT38	5675
SPT48	5675
SPT58	5677
SPT68	5677
SPT110	5673
SPT110A	5673
SPT110AB	5673
SPT110B	5673
SPT110BC	5673
SPT110C	5673
SPT115	5673
SPT115A	5673
SPT115AB	5673
SPT115B	5673
SPT115BC	5673
SPT115C	5673
SPT125	5682
SPT125A	5682
SPT125B	5682
SPT125C	5682
SPT130	5693
SPT130A	5693
SPT130AB	5693
SPT130B	5693
SPT130BC	5693
SPT130C	5693
SPT140	56022
SPT140A	5693
SPT140AB	5693
SPT140B	5693
SPT140BC	5693
SPT140C	5693
SPT210	5673
SPT210A	5673
SPT210AB	5673
SPT210B	5673
SPT210BC	5673
SPT210C	5673
SPT215	5673
SPT215A	5673
SPT215AB	5673
SPT215B	5673
SPT215BC	5673
SPT215C	5673
SPT225	5683
SPT225A	5683
SPT225AB	5683
SPT225B	5683
SPT225BC	5683
SPT225C	5683
SPT230	5693
SPT230A	5693
SPT230AB	5693
SPT230B	5693
SPT230BC	5693
SPT230C	5693
SPT240	5693
SPT240A	5693
SPT240AB	5693
SPT240BC	5693
SPT240C	5693
SPT310	5675
SPT310A	5675
SPT310AB	5675
SPT310B	5675
SPT310BC	5675
SPT310C	5675
SPT315	5675
SPT315A	5675
SPT315AB	5675
SPT315B	5675
SPT315BC	5675
SPT315C	5675
SPT325	5685
SPT325A	5685
SPT325AB	5685
SPT325B	5685
SPT325BC	5685
SPT325C	5685
SPT330	5695
SPT330A	5695
SPT330AB	5695
SPT330B	5695
SPT330BC	5695
SPT330C	5695
SPT340	5685
SPT340A	5695
SPT340AB	5695
SPT340B	5695
SPT340BC	5695
SPT340C	5695
SPT410	5675
SPT410A	5675
SPT410AB	5675
SPT410B	5675
SPT410BC	5675
SPT410C	5675
SPT415	5675
SPT415AB	5675
SPT415B	5675
SPT415BC	5675
SPT415C	5675
SPT425	5685
SPT425A	5685
SPT425AB	5685
SPT425B	5685
SPT425BC	5685
SPT425C	5685
SPT430	5695
SPT430A	5695
SPT430AB	5695
SPT430B	5695
SPT430BC	5695
SPT430C	5695
SPT440	5685
SPT440A	5695
SPT440AB	5695
SPT440B	5695
SPT440BC	5695
SPT440C	5695
SPT510	5677
SPT510A	5677
SPT510AB	5677
SPT510B	5677
SPT510BC	5677
SPT510C	5677
SPT515	5677
SPT515AB	5677
SPT515B	5677
SPT515BC	5677
SPT515C	5677
SPT525	5687
SPT525A	5687
SPT525AB	5687
SPT525B	5687
SPT525BC	5687
SPT525C	56026
SPT530	56026
SPT610	5677
SPT610A	5677
SPT610AB	5677
SPT610B	5677
SPT610BC	5677
SPT610C	5677
SPT615	5677
SPT615A	5677
SPT615AB	5677
SPT615B	5677
SPT615BC	5677
SPT615C	5677
SPT625	5687
SPT625A	5687
SPT625AB	5687
SPT625B	5687
SPT625BC	5687
SPT625C	5687
SPT3440	198
SPT3713	130
SPX2E	3041
SPX6	3041
SPX26	3041
SPX33	3041
SPX35	3041
SPX53	3041
SPX103	3041
SPX7150	3041
SPX7272	3041
SPX7273	3041
SPX7590	3041
SPX7639	3084
SPX-26	3042
SQ7	101
SQ46	109
SQ-7	103A
SQD-2170	123
SR0004	113A
SR0R1B42	5402
SR05K-2	116
SR1	102A
SR1-2	116
SR1-K2	116
SR1A1	116
SR1A2	116
SR1A4	116
SR1A8	116
SR1A12	116
SR1A-1	116
SR1A-2	116
SR1A-4	116
SR1A-8	116
SR1A-12	116
SR1B	166
SR1D1M	116
SR1DM	116
SR1DM1	116
SR1DM-1	116
SR1DM-2	5800
SR1DM-4	116
SR1DMX	116
SR1E	116
SR1EM	116
SR1EM1	116
SR1EM2	116
SR1EM-1	116
SR1EM-2	116
SR1EM-4	156
SR1EM-X	116
SR1FM	116
SR1FM2	5801
SR1FM4	116
SR1FM6	5804
SR1FM8	5804
SR1FM10	116
SR1FM12	116
SR1FM16	5808
SR1FM20	125
SR1FM-1	116
SR1FM-2	506
SR1FM-4	506
SR1FM-8	116
SR1FM-12	506
SR1FMA	116
SR1HM-2	116
SR1HM-4	116
SR1HM-8	506
SR1HM-12	506
SR1HM-16	116
SR1K	116
SR1K08	116
SR1K1	116
SR1K2	116
SR1K8	116
SR1K-1	116
SR1K-1K	116
SR1K-2	116
SR1K-2/494	116
SR1K-4	116
SR1K-8	116
SR1K-Z	116
SR1K/494	116
SR1MM-8	116
SR1T	116
SR1Z	116
SR2A1	116
SR2A2	116
SR2A4	116
SR2A8	116
SR2A12	116
SR2A-1	116
SR2A-2	116
SR2A-4	116
SR2A-8	125
SR2A-12	125
SR2B12	156
SR2B16	156
SR2B20	156
SR2B-1	5830
SR2B-2	5832
SR2B-4	5834
SR2B-6	5386
SR2B-12	5842
SR2B-16	5846
SR2B-20	5848
SR2C-1	5830
SR2C-2	5832
SR2C-4	5834
SR2C-6	5836
SR2C-8	5838
SR2C-12	5842
SR2C-16	5846
SR2C-20	5848
SR3	116
SR3AM	125
SR3AM1	5800
SR3AM2	5801
SR3AM3	5081A
SR3AM4	5802
SR3AM6	5804
SR3AM8	5804
SR3AM10	5806
SR3AM-2	125
SR3AM-3	5801
SR3AM-4	5802
SR3AM-6	5804
SR3AM-8	117
SR3AM-10	5806
SR3AM-12	5806
SR3BM-6	116
SR4	116
SR5	116
SR6	113A
SR10-4S	5916
SR10A8S	5878
SR10A-2R	5873
SR10A-2S	5872
SR10A-4R	5875

PART NUMBER	NTE REPLACEMENT
SR10A-4S	5874
SR10A-6R	5877
SR10A-6S	5876
SR10A-8R	5879
SR10A-10R	5881
SR10A-10S	5880
SR10A-12R	5883
SR10A-12S	5882
SR10A-16R	5887
SR10A-16S	5886
SR10A-20R	5891
SR10A-20S	5890
SR10D1	5940
SR10D2	5942
SR10D4	5942
SR10D-2R	5873
SR10D-2S	5872
SR10D-4R	5875
SR10D-4S	5874
SR10D-6R	5877
SR10D-6S	5876
SR10D-8R	5879
SR10D-8S	5878
SR10D-10R	5881
SR10D-10S	5880
SR10D-12R	5883
SR10D-12S	5882
SR10D-16R	5887
SR10D-16S	5886
SR10D-20R	5891
SR10D-20S	5890
SR10H-1	5912
SR10H-4	5916
SR10H-6	5920
SR10H-8	5920
SR10J-1	5912
SR10J-2	5916
SR10J-4	5916
SR10J-6	5920
SR10J-8	5920
SR10L-1R	5941
SR10L-1S	5940
SR10L-2R	5943
SR10L-2S	5942
SR10L-4R	5945
SR10L-4S	5916
SR10L-6S	5946
SR10L-8R	5949
SR10L-8S	5948
SR10L-10R	5951
SR10L-10S	5950
SR10L-45	5944
SR13	113A
SR13H	116
SR16	117
SR17	116
SR18	5808
SR20	113A
SR21	113A
SR22	116
SR23	116
SR24	116
SR25	506
SR27	116
SR28	116
SR29	113A
SR30	116
SR32	118
SR35	116
SR37	120
SR40	116
SR50	116
SR50A-8R	6061
SR50A-8S	6060
SR50A-10R	6065
SR50A-10S	6064
SR50A-12R	6065
SR50A-12S	6064
SR50A-16R	6069
SR50A-16S	6068
SR50A-20R	6073
SR50A-20S	6072
SR56V2E	2V035
SR60	116
SR70C-10	6065
SR70C-10S	6064
SR70C-12	6065
SR70C-12S	6064
SR70C-16	6069
SR70C-16S	6068
SR70C-20	6073
SR70C-20S	6072
SR76	116
SR82V2E	2V050
SR100	116
SR101-1	116
SR101-2	116
SR102	585
SR103	585
SR103D	3025
SR103W	3020
SR104	585
SR105	578
SR105D	3007
SR106	578
SR106D	3000
SR109	578
SR112	116
SR114	116
SR120	116
SR130-1	108
SR131-1	116
SR132-1	5800
SR135-1	116
SR136	5806
SR144	116
SR145	116
SR150	125
SR150V2E	2V150
SR151	116
SR152	116
SR153	5940
SR154	156
SR180V2E	2V115
SR200	116
SR200B	116
SR205	116
SR210	5802
SR220	5802
SR302	586
SR303	586
SR304	586
SR305	579
SR306	579
SR390	579
SR390-2	117
SR401	116
SR405	116
SR475	5800
SR499	156
SR500	116
SR500B	116
SR507	5802
SR605	116
SR710	6200
SR710CTR	6246
SR711	6200
SR711CTR	6246
SR711F	6206
SR712	6200
SR712CTR	6246
SR712F	6206
SR714	6202
SR714F	6208
SR716	6204
SR716F	6210
SR806-126	116
SR846-2	116
SR846-3	116
SR851	116
SR851-121	116
SR889	116
SR1001	5940
SR1024	116
SR1104	116
SR1156	506
SR1266	116
SR1378-1	116
SR1378-2	5804
SR1378-3	116
SR1422	5800
SR1493	116
SR1549	116
SR1598	5800
SR1602	6087
SR1603	6087
SR1604	6087
SR1643A	5800
SR1650	5808
SR1668	116
SR1692	116
SR1693	116
SR1694	116
SR1695	116
SR1731-1	116
SR1731-2	116
SR1731-3	116
SR1731-4	116
SR1731-5	116
SR1742	116
SR1762	5802
SR1766	116
SR1984	116
SR2121	116
SR2301	116
SR2301A	116
SR3002C	6090
SR3003C	6090
SR3004C	6090
SR3010	116
SR3582	116
SR3943	116
SR6134	116
SR6324	116
SR6325	116
SR6385	116
SR6415	116
SR6560	116
SR6567	116
SR6617	116
SR6723	116
SR6724	116
SR9000	118
SR9002	113A
SR9003	116
SR9005	116
SR20226	229
SR20234	123AP
SR50253-2	167
SR50411-1	116
SR50517	117
SR75844	123AP
SR-0004	113A
SR-0005	116
SR-0006	113A
SR-0007	116
SR-0008	116
SR-05K-2	116
SR-1	116
SR-1HM-2	116
SR-1K	116
SR-1K2	116
SR-1K-2	116
SR-1K-2A	125
SR-1K-2B	125
SR-1K-2C	125
SR-1K-2D	125
SR-1Z	116
SR-2	125
SR-3	116
SR-4	116
SR-5	116
SR-13	178MP
SR-13H	116
SR-14	116
SR-17	116
SR-18	116
SR-20	178MP
SR-20,29	113A
SR-22	116
SR-23	116
SR-24	116
SR-27	116
SR-28	116
SR-29	113A
SR-30	116
SR-32	118
SR-34	177
SR-35	125
SR-37	120
SR-76	116
SR-100	5802
SR-101-1	116
SR-101-2	116
SR-103D	3025
SR-103W	3020
SR-105D	3007
SR-106D	3000
SR-112	116
SR-114	5802
SR-120	116
SR-120-1	116
SR-130-1	116
SR-131-1	116
SR-132-1	116
SR-136	116
SR-150-01	116
SR-150-1	116
SR-390	116
SR-401	116
SR-499	156
SR-846-2	116
SR-889	116
SR-1668	116
SR-1849-1	116
SR-9000	118
SR-9001	125
SR-9002	113A
SR-9003	120
SR-9005	120
SR-9007	125
SR-IK-2	116
SRB2B-8	5838
SRD734XFXXXXX	85
SRI-155740B	5547
SRIDM	116
SRIDM-1	116
SRIDM-4	116
SRIEM-1	116
SRIEM-2	116
SRIEM-4	116
SRIFM-2	506
SRIFM-4	506
SRIFM-12	506
SRIHM-8	506
SRIK-2	116
SRIK-8	116
SRK1	116
SRK-2	116
SRLFM-1	116
SRM2114C3	2114
SRM-82	541
SRR13	113A
SRS1004	190
SRS2004	198
SRS2504	198
SRS2804S	198
SRS3014	198
SRS3204S	198
SRS3504	198
SRS3604S	198
SRS4014	198
SRS4014S	198
SRS4404S	198
SRS4504	198
SRS5014	198
SRS5504	198
SS00010	116
SS000I	102A
SS0001	102A
SS0001A	102A
SS00010	116
SS0002	158
SS0002A	102A
SS0003	158
SS0003A	102A
SS0004	102A
SS0004A	102A
SS0005	102A
SS0005A	102A
SS0007	109
SS0008	109
SS0009	116
SS1-145128	123AP
SS29A4	234
SS29A5	234
SS155	160
SS171	396
SS188TV	109
SS277G	116
SS321	116
SS322	116
SS324	116
SS334	116
SS337	116
SS455	116
SS490	219
SS524	154
SS1074	102
SS1123	191
SS1606	159
SS1606A	121
SS1821	123A
SS1906	159
SS1906A	159
SS1912	154
SS2308	123AP
SS2409	213
SS2503	159
SS2503A	159
SS2504	123AP
SS2711	123A
SS3534-4	132
SS3586	133
SS3672	133
SS3694	123AP
SS3704	132
SS3735	133
SS3935	195A
SS4001AE	4001B
SS4002AE	4002B
SS4011AE	4011B
SS4012AE	4012B
SS4013AE	4013B
SS4023AE	4023B
SS4025AE	4025B
SS4027AE	4027B
SS4028AE	4028B
SS4030AE	4030B
SS4042	161
SS4312	278
SS6111	154
SS6724	159
SS9327	190
SS9328	123AP
SS-1	116
SS-2N5062	5402
SS-3704	133
SSA43	159
SSA43A	159
SSA43A-1	159
SSA46	159
SSA46A	159
SSA48	159
SSA48A	159
SSA-LXB10YW	3117
SSB3020CT	6090
SSB3030CT	6090
SSB3040CT	6090
SSD32	130
SSD974	116
SSI1120	5804
SSIB0140	156
SSIB0180	156
SSIB0640	156
SSIB0680	156
SSIC0810	5802
SSIC0820	5804
SSIC0840	156
SSIC0860	5809
SSIC0880	156
SSIC1110	5802
SSIC1140	5806
SSIC1160	5809
SSIC1180	5809
SSIC1210	5802
SSIC1220	5804
SSIC1240	5806
SSIC1260	5809
SSIC1280	156
SSIC1660A	5809
SSIC1740	156
SSIC1780	156
SSIC1960A	156
SSK2087	3087
SSM6N60	2386
SSP310	6084
SSP320	6084
SSP330	6084
SSP340	6084
SSP840	6084
SSP1530	6084
SSP1540	6084
SSP2020	6084
SSP2030	6084
SSP2040	6084
SSP3005	6094
SSP3010	6094
SSP3030	6094
SSP3040	6094
ST01	123AP
ST02	123AP
ST03	123AP
ST04	123AP
ST05	123AP
ST06	123AP
ST07279	160
ST2	6408
ST2(GE)	6407
ST2-10	5874
ST2-20	5874
ST2-30	5874
ST2-40	5874
ST2-2517	106
ST2T003	199
ST3-10	5990
ST3-20	5990
ST3-30	5990
ST3-40	5990
ST4	6405
ST4-10	5990
ST4-20	5990
ST4-30	5990
ST4-40	5990
ST5A10P	6022
ST5A20P	6026
ST5A20PN	6027
ST5A30P	6030
ST5A30PN	6031
ST5A40P	6034
ST5A40PN	6035
ST5A50P	6038
ST5A50PN	6039
ST5A60P	6040
ST5A60PN	6041
ST5A80P	6042
ST5A80PN	6043
ST5A100P	6044
ST5A100PN	6045
ST9	108
ST10	108
ST11	107
ST12	108
ST13	108
ST14	108
ST15	108
ST16	116
ST18	125
ST25A	123AP
ST25B	123AP
ST25C	123AP
ST28A	102A
ST28B	102A
ST28C	102A
ST29	108
ST30	108
ST31	108
ST32	108
ST33	108
ST34	108
ST35	108
ST37C	102A
ST37D	102A
ST37E	102A
ST37O	176
ST39	5007A
ST40	108
ST41	108
ST42	108
ST43	108
ST44	108
ST45	108
ST47	112
ST50	123AP
ST51	123AP
ST53	123AP
ST54	123AP
ST55	123AP
ST56	123AP
ST57	123AP
ST58	123AP
ST59	123AP
ST60	108
ST61	108
ST62	108
ST63	123AP
ST64	123AP
ST70	108
ST71	108
ST72	108
ST80	108
ST82	108
ST101	181
ST106	105
ST107	105
ST108	105
ST109	105
ST110	105
ST111	105
ST112	105
ST122	102A
ST123	102A
ST129-1	159
ST150	123AP
ST151	123AP
ST152	123AP
ST153	123AP
ST154	123AP
ST155	123AP
ST156	123AP
ST157	123AP
ST160	123AP
ST161	123AP
ST162	123AP
ST163	123AP
ST172	101
ST175	123AP
ST176	123AP
ST177	123AP
ST178	123AP
ST180	123AP
ST181	123AP
ST182	123AP
ST210E	5894
ST210EN	5895
ST210P	5872
ST210PN	5873
ST213	128
ST220E	5896
ST220EN	5897
ST220P	5874
ST220PN	5875
ST230E	5898
ST230EN	5899
ST230P	5876
ST230PN	5877
ST235	121
ST240E	5900
ST240EN	5901
ST240P	5878
ST240PMN	5879
ST250	123AP
ST250E	5902
ST250EN	5903
ST250P	5880
ST250PN	5881
ST251	123AP
ST254Q	128
ST260E	5904
ST260EN	5905
ST260P	5882
ST260PN	5883
ST280E	5908
ST280EN	5909
ST280P	5886
ST280PN	5887
ST301	102A
ST302	102A
ST303	102A
ST304	102A
ST332	102A
ST370	102A
ST382	102A
ST402	192
ST403	123AP
ST415	108
ST433K	128
ST501	123AP
ST502	123AP
ST503	123AP
ST504	123AP
ST903	108
ST904	108
ST904A	108
ST905	108
ST910	108
ST1026	108
ST1042	123AP
ST1042C	123AP
ST1050	108
ST1051	108
ST1100PN	6073
ST1110P	6050
ST1110PN	6051
ST1120P	6054
ST1120PN	6055
ST1130P	6058
ST1130PN	6059
ST1140P	6060
ST1140PN	6061
ST1150P	6064
ST1150PN	6065
ST1160P	6064
ST1160PN	6065
ST1180P	6060
ST1180PN	6069
ST1242	123AP
ST1243	123AP
ST1244	123AP
ST1290	123AP
ST1336	108
ST1343	397
ST1402	123AP
ST1402C	123AP
ST1402D	123A
ST1402E	123A
ST1502	107
ST1502B	107
ST1502C	108
ST1502D	107
ST1502L	123AP
ST1504	192
ST1505	192
ST1506	123AP
ST1602D	159
ST1602E	159
ST1607	123AP
ST1694	108
ST1702L	123AP
ST1702M	123AP
ST1702N	123AP
ST1802M	294
ST2040P	116
ST2100E	5910
ST2100EN	5911
ST2100P	5890
ST2100PN	5891
ST3030	108
ST3031	108
ST4150	128
ST4201	128
ST4202	128
ST4203	128
ST4204	128
ST4341	192
ST5060	123AP
ST5061	192
ST5641	161
ST6110	159
ST6120	108
ST6510	107
ST6511	123AP
ST6512	123AP
ST6573	128
ST6574	128
ST7100	199
ST8014	159
ST8033	159
ST8033A	159
ST8034	159
ST8034A	159
ST8035	159
ST8035A	159
ST8036	159
ST8036A	159
ST8065	159
ST8065A	159
ST8190	159
ST8500	159
ST8500A	159
ST8509	159
ST8509A	159
ST9011G	85
ST9012H	159
ST9013H	123AP
ST9014C	123AP
ST9015C	159
ST9018F	108
ST9018G	108
ST11100P	6072
ST22546-1	519
ST27020	153
ST29045	180
ST29046	180
ST29047	180
ST32012-0037	519
ST33026	199
ST47025	108
ST61000	193
ST62180	159
ST72039	129
ST72040	129
ST74000	198
ST84000	198
ST84027	198
ST84028	198
ST84029	198
ST984539-006	9948
ST.082.112.005	123AP
ST.082.114.015	123AP
ST.082.114.016	199
ST.082.115.015	159
ST-021660	129
ST-2	6407
ST-2N6558	191
ST-2SA673C	290
ST-2SA738C	185
ST-2SA844C	234
ST-2SA5624	290A
ST-2SB561C(ECB)	159
ST-2SB568C	292
ST-2SC383W	199
ST-2SC388ATM-1	85
ST-2SC458C	85
ST-2SC460B	85
ST-2SC535B	107
ST-2SC717	107
ST-2SC1106	162
ST-2SC1213D	289A
ST-2SC1514	198
ST-2SC1514-05	376
ST-2SC1674L	107
ST-2SC1923-0	229
ST-2SD313F	152
ST-2SD401AK	375
ST-2SD467B	289
ST-2SD478C	375
ST-2SD748A	162
ST-2SD748A-01A	87
ST-4	6405
ST-12	116
ST-14	116
ST-28A	176
ST-28B	100
ST-28C	100
ST-37C	100
ST-37D	100
ST-41	5005A
ST-103	126
ST-106	105
ST-107	105
ST-108X	105
ST-109	105
ST-110	105
ST-111	105
ST-112	105
ST-122	102A
ST-123	102A
ST-125	160
ST-172	101
ST-201	128
ST-213	128
ST-235	121
ST-254-Q	128
ST-301	102A
ST-302	102A
ST-304	102A
ST-332	102A

PART NUMBER	NTE REPLACEMENT
ST-370	100
ST-1242	123AP
ST-1243	123AP
ST-1244	123AP
ST-1290	123AP
ST-1602E(ECB)	159
ST-2040P	116
ST-BC337-25	123AP
ST-BDY92	328
ST-BF422	399
ST-BU-205-01A	165
ST-BU208	165
ST-HIT9012H	290A
ST-HIT9013H	123AP
ST-HIT9014C	123AP
ST-HIT9016G	229
ST-HIT-9012H	290
ST-LM2152	123AP
ST-LM2682	128
ST-MJE9742	157
ST-MPS9410AJ	128
ST-MPS9410SAK	128
ST-MPS9418AS	297
ST-MPS9418AT	297
ST-MPS9433	123AP
ST-MPS9433T	123AP
ST-MPS9682J	159
ST-MPS9700D	123AP
ST-MPS9700E	123AP
ST-MPS9700F	123AP
ST-MPS9700G	123AP
ST-MPS9750D	159
ST/123/CR	519
ST/146/CR	519
ST/217/Q	123AP
STA10P	6022
STA10PN	6023
STA608XFXXXX1	159
STA608XFXXXXB	159
STA608XGXXXXB	159
STA7018	165
STA9364	283
STB01-02	177
STB4	5002A
STB576	177
STB598XEXXXXX	159
STB698XFXXXXX	159
STBF459	157
STBOL-02	116
STC536XEXXXU1	85
STC536XFXXXU1	85
STC536XFXXXUB	85
STC536XGXXXUB	85
STC930XE1XXC1	107
STC930XEXXXR1	107
STC930XEXXXX1	107
STC1035	130
STC1035A	130
STC1036	130
STC1036A	130
STC1080	130
STC1081	130
STC1082	130
STC1083	130
STC1084	130
STC1085	162
STC1094	181
STC1300	152
STC1336	192
STC1674LXXXXX	107
STC1800	186
STC1850	152
STC1860	152
STC1862	186
STC2220	181
STC2221	181
STC2224	181
STC2225	181
STC2228	181
STC2229	181
STC4252	130
STC4253	130
STC4254	130
STC4255	130
STC4401	175
STC5202	153
STC5203	153
STC5205	153
STC5206	153
STC5303	153
STC5610	129
STC5611	129
STC5612	129
STC5802	153
STC5803	153
STC5805	153
STC5806	153
STC-1035	130
STC-1035A	130
STC-1036	130
STC-1036A	130
STC-1085	130
STC-4401	175
STD330XEXXXXX	152
STD545XEXXXXX	293
STD612XFXXXXX	184
STD9007	186
STE400	108
STFCN10	116
STH7251	197
STHIT9012H	290
STHIT9013H	123AP
STHIT9014C	123AP
STI10	198
STI20	198
STI30	198
STI40	198
STI50	198
STK0030	1333
STK0030GN	1333
STK0040	1333
STK0040BL	1333
STK0040K	1281
STK0040VT	1281
STK0050	1281
STK0050AP	1281
STK0050M	1281
STK0050U	1281
STK0050V	1281
STK0060	1346
STK0070-2	1335
STK0070-II	1335
STK0070II	1335
STK0070IIGN	1335
STK0080	1322
STK0080-2	1335
STK0080II	1335
STK0080IIBL	1335
STK0025	1320
STK0029	1320
STK0029K	1320
STK0029NZ	1320
STK0029P	1320
STK0039	1282
STK0039M	1282
STK0039P	1282
STK080	1327
STK011	1024
STK015	1027
STK016	1323
STK018	1139
STK022	1090
STK025	1090
STK032	1090
STK054	1028
STK056	1028
STK056A	1028
STK058	1340
STK077	1326
STK078	1326
STK082	1327
STK083	1328
STK084	1328
STK086BL	1337
STK413	1218
STK415	1218
STK430	1343
STK430-3	1359
STK430-III	1359
STK430III	1359
STK433	1218
STK435	1218
STK437	1219
STK439	1219
STK441	1329
STK443	1344
STK457	1330
STK459	1330
STK460	1347
STK461	1331
STK463	1331
STK465	1345
STK561	1732
STK561F	1732
STK563	1732
STK563A	1732
STK563F	1732
STK583	1732
STK583F	1732
STK583FST	1732
STK1050	1358
STK2029	1356
STK2230	1875
STK3042	1338
STK3042BL	1338
STK3042GN	1338
STK3082	1339
STK3082BL	1339
STK3082GN	1339
STK4018-2	1815
STK4018-II	1815
STK4020-2	1815
STK4020-II	1815
STK4022-2	1815
STK4022-II	1815
STK4024-2	1815
STK4024-II	1815
STK4101-2	1874
STK4101-II	1874
STK4111-2	1817
STK4111-II	1874
STK4112-2	1817
STK4112-II	1817
STK4121-2	1874
STK4121-II	1874
STK4121II	1874
STK4122-2	1817
STK4122-II	1817
STK4131-2	1817
STK4131-II	1817
STK4131II	1817
STK4132-2	1817
STK4132-II	1817
STK4141-2	1818
STK4141-II	1818
STK4141II	1818
STK4142-2	1818
STK4142-II	1818
STK4151-2	1315
STK4151-II	1315
STK4152-2	1819
STK4152-II	1819
STK4161-2	1315
STK4161-II	1315
STK4162-II	1871
STK4162II	1871
STK4171-2	1316
STK4171-II	1316
STK4171-V	1317
STK4171II	1316
STK4171V	1317
STK4172-2	1871
STK4172-II	1871
STK4172II	1871
STK4181-2	1316
STK4181-II	1316
STK4181-V	1317
STK4181V	1317
STK4182-2	1871
STK4182-II	1871
STK4182II	1871
STK4191-2	1316
STK4191-II	1316
STK4191-V	1317
STK4191II	1316
STK4191V	1317
STK4192-2	1871
STK4192-II	1871
STK4192II	15021
STK4201-2	15034
STK4201-II	15034
STK4211-2	15034
STK4211-II	15034
STK4221-2	15034
STK4221-II	15034
STK4231-2	15034
STK4231-II	15034
STK4273	15031
STK4301	1877
STK4311	1877
STK4352	1218
STK4362	1218
STK4773	1820
STK4793	1820
STK4803	1820
STK4813	1820
STK4833	1820
STK4843	1820
STK5332	1880
STK5372	1883
STK5372H	1883
STK5431	1733
STK5431SL	1733
STK5436	1876
STK5441	1734
STK5451	1735
STK5471	1822
STK5476	1881
STK5479	1884
STK5481	1823
STK5482	1872
STK5490	1823
STK6720H	1885
STK6721H	1885
STK6722H	1885
STK6942	1824
STK6962	1748
STK6962C	1748
STK6972	1825
STK6982	1736
STK6982B	1736
STK7308	1870
STK7309	1870
STK7563	1737
STK7563F	1737
STK-0030	1333
STK-0040	1333
STK-0070-2	1335
STK-0070II	1335
STK-0080-2	1335
STK-0080II	1335
STK-0029N	1320
STK-011	1024
STK-015	1027
STK-018	1139
STK-032	1090
STK-054	1028
STK-056	1028
STK-056A	1028
STK-058	1340
STK-413	1218
STK-415	1218
STK-433	1218
STK-435	1218
STK-437	1219
STK-563F	1732
STK-3042	1338
STK-3082	1339
STM73Q	159
STM101	500A
STP6012	67
STPT51	3032
STPT53	3032
STPT80	3032
STPT81	3032
STPT82	3032
STPT83	3032
STPT84	3032
STPT260	3036
STR101(ELCOM)	5640
STR103(ELCOM)	5640
STR106(ELCOM)	5673
STR117	5682
STR117(ELCOM)	5673
STR125	5682
STR201(ELCOM)	5641
STR202(ELCOM)	5641
STR203(ELCOM)	5641
STR206(ELCOM)	5673
STR217	5683
STR217(ELCOM)	5673
STR225	5683
STR225(ELCOM)	5673
STR230(ELCOM)	5673
STR380	1548
STR381	1546
STR381A	1546
STR383	1719
STR403(ELCOM)	5642
STR406(ELCOM)	5675
STR417	5685
STR417(ELCOM)	5675
STR418(ELCOM)	5635
STR425	5685
STR425(ELCOM)	5685
STR430(ELCOM)	5675
STR440	1645
STR1740R	85
STR2012	1867
STR2013	1868
STR3035	1743
STR3115	15018
STR3123	15021
STR3125	15020
STR3130	1742
STR3135	1743
STR3230	1742
STR3335	15022
STR30115	1896
STR30120	1839
STR30123	1776
STR30125	1897
STR30130	1777
STR30130-A	1777
STR30135	1778
STR50041	1894
STR50041A	1894
STR51041	1895
STR53041	1840
STR54041	1796
STR-381	1546
STR-3035	15012
STR-3130	15019
STS402	283
STS403	283
STS409	283
STS430	283
STS431	283
STT2300	181
STT2405	236
STT2406	236
STT3500	181
STT4451	186
STT4483	236
STT9001	236
STT9002	236
STT9004	236
STT9005	236
STV-3	116
STX0010	175
STX0020	185
STX0030	153
STX0090	160
STX0011	129
STX0013	184
STX0014	130
STX0015	124
STX0016	175
STX0026	184
STX0027	130
STX0028	154
STX0029	153
STX0032	130
STX0033	126
STX0034	126
STX0036	160
STX0085	160
STX0087	160
STX0089	160
STX0096	102A
STX0114	102A
STX0121	158
STX0123	102A
STX0224	158
STX0263	102A
STX0264	102A
STX0265	102A
STX0268	102A
STX0269	102A
STX3326	196
STX49007	941M
SU5	145A
SU44	6409
SU110	6401
SU2076	133
SU2077	133
SU2080	133
SU2081	133
SU-31	109
SUB15-100	116
SUC650	137A
SUM6010	137A
SUM6011	137A
SUM6020	137A
SUM6021	137A
SV01A	116
SV02A	116
SV03	606
SV04	607
SV04S	607
SV05	116
SV9	177
SV30	109
SV31	158
SV121	135A
SV122	135A
SV123	136A
SV133	140A
SV135	142A
SV137	144A
SV138	145A
SV139	5075A
SV141	5076A
SV142	5027A
SV143	5078A
SV144	5029A
SV168	5030A
SV174LS42P	74LS42
SV910	5187AK
SV1017	142A
SV1019	144A
SV1020	145A
SV1238	116
SV1238E	116
SV2052	5209AK
SV2058	5190AK
SV3144	5002A
SV4012	142A
SV4012A	142A
SV4014	144A
SV4014A	144A
SV4015	145A
SV4015A	145A
SV4018	5027A
SV4018A	5027A
SV4027	146A
SV4027-6	146A
SV4027A	146A
SV4027A-6	146A
SV4033	147A
SV4033A	147A
SV4055	148A
SV4055A	148A
SV4062	149A
SV4062A	149A
SV4082	150A
SV4082A	150A
SV11021	141A
SV12388	116
SV12388E	116
SV-01A	116
SV-01B	116
SV-02	137A
SV-02(RECT)	116
SV-03	606
SV-04	607
SV-05	116
SV-3	177
SV-3A	177
SV-3B	177
SV-3C	177
SV-7	138A
SV-8	177
SV-9	139A
SV-9(ZENER)	139A
SV-31	109
SV-31(DIODE)	109
SV-138A	145A
SV-1020A	145A
SV-1238E	116
SV-4015A	145A
SV-12388	116
SV-BZX79C10V	5019A
SV-KB262	605A
SVC0053	614
SVC101	614
SVC201	614
SVC201Y	613
SVC211	617
SVC251	614
SVC321	618
SVC321Y	618
SVC625	137A
SVC650	137A
SVC1125	141A
SVC1150	141A
SVC-201	614
SVD0A70	109
SVD0A79	109
SVD0A90	109
SVD02Z8	5072A
SVD02Z8.2	5072A
SVD02Z8.2A	5072A
SVD02Z9.5A	139A
SVD0278.2A	5072A
SVD0279.5A	139A
SVD1S1717	139A
SVD1S1850	116
SVD1S1850R	115
SVD10D-1	116
SVD12B2B1P-M	166
SVD20A70	109
SVD20A79	109
SVD-1S1717	139A
SVD-1S1850R	116
SVDAS2HB10	156
SVDEQA0113RA	5022A
SVDM324A	5031A
SVDMA26	117
SVDMA26-1	109
SVDMA26-2	177
SVDMZ303A	5005A
SVDMZ305AM	5010T1
SVDMZ307A	5014A
SVDMZ310NB	5019A
SVDMZ312C2	5021A
SVDMZ330A2	5035A
SVDMZ333A	5036A
SVDMZ336B	5037A
SVDMZ414C	145A
SVDOA70	109
SVDOA90	109
SVDRD8.2EB	5016A
SVDRD16EB	5025A
SVDS1RB10	166
SVDS3V40	156
SVDS10VB20	5314
SVDS-1S1850	116
SVDSC20	109
SVDSR1K2	116
SVDVD1121	177
SVDVD1223	116
SVI-LA3300	1005
SVI-LD3120	1019
SVI-STK018	1139
SVIAUPC577HF	1082
SVINJM4559DS	778A
SVIUPD4066C	4066B
SVM61	137A
SVM111	141A
SVM601	137A
SVM602	137A
SVM605	137A
SVM1105	141A
SVM6010	137A
SVM6011	137A
SVM6020	137A
SVM6021	137A
SVM11020	141A
SVVD1220XXXXX	605A
SVVD1221LXXXX	605A
SW0501	116
SW0.5A	116
SW01	142A
SW01PCN012	5940
SW01PCR012	5893
SW02PCN012	5896
SW02PCR012	5897
SW03PCN012	5898
SW03PCR012	5899
SW04PCN012	5900
SW04PCR012	5901
SW04PHN100	6154
SW04PHN300	6354
SW04PHR100	6155
SW04PHR300	6355
SW05	116
SW05-01	116
SW05-02	116
SW05A	116
SW05B	116
SW05C	125
SW05D	125
SW05PCN012	5902
SW05PCR012	5903
SW05S	116
SW05SS	116
SW05V	116
SW06CXC14C	6116
SW06CXC400	6110
SW06CXC935	6113
SW06PCN012	5904
SW06PCR012	5905
SW06PHN100	6156
SW06PHN300	6356
SW06PHR100	6157
SW06PHR300	6357
SW08PCN020	5928
SW08PCN012	5908
SW08PCR020	5929
SW08PCR012	5909
SW1	156
SW1C	125
SW1D	125
SW4F013	291
SW10PCN020	5932
SW10PCN012	5910
SW10PCR020	5933
SW10PCR012	5911
SW10PHN100	6158
SW10PHN300	6358
SW10PHR100	6159
SW10PHR300	6359
SW12CXC14C	6118
SW12CXC400	6112
SW12CXC935	6115
SW14PHN100	6162
SW14PHN300	6362
SW14PHR100	6163
SW14PHR300	6363
SW705-2M	9093
SW705-2P	9093
SW706-2M	9099
SW706-2P	9099
SW708-2M	9094
SW708-2P	9094
SW709-2M	9097
SW709-2P	9097
SW930-2M	9930
SW930-2P	9930
SW932-2M	9932
SW932-2P	9932
SW933-2M	9933
SW933-2P	9933
SW935-2M	9935
SW935-2P	9935
SW936-2M	9936
SW936-2P	9936
SW937-2M	9937
SW937-2P	9937
SW944-2M	9944
SW944-2P	9944
SW945-2M	9945
SW945-2P	9945
SW946-2M	9946
SW946-2P	9946
SW948-2M	9948
SW948-2P	9948
SW949-2M	9949
SW949-2P	9949
SW950-2M	9950
SW950-2P	9950
SW951-2M	9951
SW951-2P	9951
SW957-2M	9157
SW957-2P	9157
SW958-2M	9158
SW958-2P	9158
SW961-2M	9961
SW961-2P	9961
SW962-2P	9962
SW963-2M	9963
SW963-2P	9963
SW4001	4001B
SW4002	4002B
SW4011	4011B
SW4012	4012B
SW4013	4013B
SW4015	4015B
SW4016	4016B
SW4017	4017B
SW4019	4019B
SW4020	4020B
SW4021	4021B
SW4023	4023B
SW4024	4024B
SW4025	4025B
SW4027	4027B
SW4030	4030B
SW4050	4050B
SW-05	5800
SW-05-005	116
SW-05-02	116
SW-05V	116
SW-1	156
SW-1-01	156
SW-1-02	156
SW-1A	116
SW-10548	9937
SW-10549	9158
SWC	125
SWD	125
SWO.5A	116
SWPCR012	5895
SWT1728	160
SWT3588	160
SX33	5142A
SX36	5143A
SX39	5144A
SX43	5145A
SX47	5146A
SX51	5147A
SX55	123AP
SX56	5148A
SX60M	154
SX61	129
SX61M	159
SX61MA	159
SX62	5150A
SX68	5151A
SX75	5152A
SX82	5153A
SX91	5155A
SX100	5156A
SX110	5157A
SX120	5158A
SX408	229
SX623	116
SX631	116
SX633	116
SX641	116
SX642	116
SX643	116
SX644	116
SX645	116
SX751	5872
SX752	5874
SX753	5878
SX754	5878
SX780	177
SX3001	108
SX3702	159
SX3702A	159
SX3709	123AP
SX3711	123AP
SX3819	132
SX3825	108
SX3826	229
SX3827	108
SX-58Y	133
SX-642	116
SX-990	109
SX-3825	108

PART NUMBER	NTE REPLACEMENT
SY101	101
SY205D	3011
SY403D	3021
SY6502	6502
SY6532	6532
SY61583	176
SYC2716	2716
SYC6502	6502
SYC6507	6507
SYL101	101
SYL102	101
SYL103	103
SYL104	103
SYL105	100
SYL106	100
SYL107	102
SYL107A	102A
SYL108	102
SYL108A	102A
SYL109	121
SYL128	110MP
SYL152	123
SYL160	100
SYL792	101
SYL1182	123AP
SYL1279	101
SYL1288	103A
SYL1297	103
SYL1310	101
SYL1311	101
SYL1312	101
SYL1313	101
SYL1326	101
SYL1327	101
SYL1329	103
SYL1380	101
SYL1396	103
SYL1408	101
SYL1430	102
SYL1454	101
SYL1468	103A
SYL1524	103
SYL1535	102
SYL1536	103
SYL1537	101
SYL1538	103
SYL1539	103
SYL1547	103
SYL1583	102
SYL1583A	102A
SYL1588	100
SYL1591	101
SYL1608	100
SYL1617	101
SYL1655	102
SYL1655A	102A
SYL1665	102
SYL1665A	102A
SYL1668	102
SYL1668A	102A
SYL1690	100
SYL1697	100
SYL1717	100
SYL1750	101
SYL1941	101
SYL1987	101
SYL2120	100
SYL2130	101
SYL2131	101
SYL2132	101
SYL2134	103
SYL2135	103
SYL2136	103
SYL2189	160
SYL2245	101
SYL2246	101
SYL2247	100
SYL2248	102
SYL2248A	102A
SYL2249	102
SYL2249A	102A
SYL2250	100
SYL2300	102
SYL2300A	102A
SYL2650	103
SYL3460	123AP
SYL3613	102
SYL3613A	102A
SYL4131	108
SYL4275	159
SYL4280	128
SYL4315	103
SYL4339	101
SYL-101	101
SYL-102	101
SYL-103	103A
SYL-104	103A
SYL-105	100
SYL-106	100
SYL-107	102A
SYL-108	102A
SYL-152	103A
SYL-160	100
SYL-1182	123AP
SYL-1297	101
SYL-1310	101
SYL-1311	101
SYL-1329	103A
SYL-1396	103A
SYL-1524	103A
SYL-1583	102A
SYL-1608	100
SYL-1668	102A
SYL-1987	101

PART NUMBER	NTE REPLACEMENT
SYL-2130	101
SYL-2131	101
SYL-2132	101
SYL-2134	103A
SYL-2135	103A
SYL-2136	103A
SYL-2245	101
SYL-2246	101
SYL-2248	100
SYL-2249	100
SYL-2250	100
SYL-2300	108
SYL-4131	108
SYL-4315	103A
SYL-4339	103
SYP6502	6502
SYP6532	6532
SZ2.4	5061A
SZ2.7	5063A
SZ3.6	134A
SZ4.7	135A
SZ5	135A
SZ5.1	135A
SZ5.6	136A
SZ6.2	137A
SZ6.2A	137A
SZ7	5014A
SZ9	139A
SZ9.1	139A
SZ10	140A
SZ10C	5125A
SZ11	141A
SZ11.0	141A
SZ12	142A
SZ12.0	142A
SZ12C	5127A
SZ13	143A
SZ13.0	143A
SZ14	144A
SZ15	145A
SZ15.0	145A
SZ15C	5130A
SZ16	5075A
SZ18	5027A
SZ18C	5133A
SZ20	5029A
SZ22C	5136A
SZ27C	5139A
SZ33C	5142A
SZ56A	5117A
SZ62A	5119A
SZ75A	5121A
SZ91A	5124A
SZ119	5081A
SZ150	145A
SZ200	135A
SZ200-5	135A
SZ200-8.2	5072A
SZ200-17	5076A
SZ671-B	142A
SZ671-G	142A
SZ671-O	5074A
SZ671-W	5074A
SZ961-B	145A
SZ961-R	144A
SZ961-V	143A
SZ961-Y	144A
SZ1200	148A
SZ11763	151A
SZ-7	138A
SZ-9	139A
SZ-11	5074A
SZ-15B	145A
SZ-150	145A
SZ-200-8	139A
SZ-200-9	139A
SZ-200-9V	139A
SZ-200-10	140A
SZ-200-11	5074A
SZ-200-12	142A
SZ-200-13	143A
SZ-200-14	144A
SZ-200-15	145A
SZ-200-15A	145A
SZ-200-16	5075A
SZ-AW01-11	5074A
SZ-BZ-110	5074A
SZ-BZ-120	142A
SZ-EQB01-12A	142A
SZ-HZ9B3	5017A
SZ-HZ43	5008A
SZ-LA4102	1228
SZ-RD3.9EB2	5007A
SZ-RD6.2E	5013A
SZ-RD6.2EB	5071A
SZ-RD6.2EB3	5013A
SZ-RD11EB2	5020A
SZ-RD11FB	5074A
SZ-RD12EB	5021A
SZ-RD12FB	142A
SZ-US-4.0C	5008A
SZ-UZ-6.2B	5013A
SZ-UZ-12B	5021A
SZ-UZP-11B	5074A
SZ-UZP-12B	142A
SZ-UZ6.2B	5013A
SZ-UZ12B	5021A
SZ-WZ-063	5021A
SZ-WZ-110	5020A
SZ-WZ-120	5021A
SZ-WZ120	5021A
SZ-YZ063	5013A
SZ-ZD-4A2	5008A
SZ-ZD-4A3	5008A

PART NUMBER	NTE REPLACEMENT
SZA100	156
SZA-6	5070A
SZA-13	143A
SZC9	139A
SZL9	140A
SZP-9	139A
SZT8	142A
SZT9	139A
SZT-9	139A
T0003	102A
T0004	102A
T0005	102A
T05010NH	5610
T00014	102A
T0040	102A
T0012	102A
T0014	102A
T0015	102A
T0031	102A
T0033	102A
T0038	102A
T0039	102A
T0041	102A
T0051	102A
T0101	100
T0102	100
T0150	116
T0509BH	5608
T0509DH	5608
T0509MH	5609
T0509NH	5610
T0510BH	5608
T0510DH	5608
T0510MH	5609
T0609BH	5608
T0609DH	5608
T0609MH	5609
T0609NH	5610
T0610BH	5608
T0610DH	5608
T0610MH	5609
T0610NH	5610
T0809BH	5608
T0809DH	5608
T0809MH	5609
T0809NH	5610
T0810BH	5608
T0810DH	5608
T0810MH	5609
T0810NH	5610
T0.8N0.6A00	5408
T0.8N1.A00	5408
T0.8N2.A00	5408
T0.8N3.A00	5409
T0.8N4.A00	5409
T0.8N5.A00	5410
T0-101	100
T0-102	100
T0B	703
T01-030	152
T01-013	123AP
T01-014	123AP
T01-021	121
T01-022	128
T01-023	159
T01-044	133
T01-047	199
T01-101	123AP
T01-104	123AP
T01-105	123AP
T02-24-C	428
T033Z3	100
T065	116
T075	116
T0512BH	5608
T0512DH	5608
T0512MH	5609
T0512NH	5610
T1-1A6	123AP
T1-503	159
T1-503A	159
T1-741	132
T1-743	159
T1-743A	159
T1-744	159
T1-744A	159
T1-752	159
T1-752A	159
T1-906	159
T1A	704
T1B	703
T1C106A	5437
T1C106B	5437
T1C106C	5437
T1C106D	5437
T1C106F	5437
T1C106Y	5437
T1C226B	56004
T1C236B	56004
T1C236D	56006
T1C252B	5683
T1C252D	5685
T1C252M	5687
T1C262B	5683
T1C262D	5685
T1C262E	5687
T1C262M	5687
T1E	722
T1G	109
T1J6G	116
T1L113	3084
T1L127	3084
T1L128	3084
T1L156	3084

PART NUMBER	NTE REPLACEMENT
T1L157	3084
T1P29	152
T1P29X	152
T1P31	291
T1P33	390
T1P33A	390
T1P36A	393
T1P2955	219
T1P3055	130
T1S03	159
T1S03A	159
T1S04	159
T1S04A	159
T1S5A	159
T1S14	133
T1S18	229
T1S34	132
T1S37A	159
T1S38	159
T1S38A	159
T1S53	159
T1S53A	159
T1S54	159
T1S55	123AP
T1S58	132
T1S59	132
T1S61A	159
T1S86	161
T1S88	132
T1S91	159
T1S91A	159
T1S93	159
T1S93A	159
T1S94	108
T1S94(PENNCREST)	614
T1S95	123AP
T1S98	108
T1S-18	229
T1SDS1K	116
T1SZ8	108
T1V	917
T1X-M14	161
T1X-M15	161
T1X-M16	161
T1XM05	160
T1XM15	108
T1XM17	108
T1Y	917
T1Z	722
T2A	722
T2A(MOTOROLA)	722
T2A(TRANS)	172A
T2C	722
T2D	723
T2G	723
T2G(DIODE)	109
T2G(IC)	723
T2J	708
T2N	789
T2N1	789
T2N-1	789
T2SA495-0	290A
T2SA940	398
T2SC388A	85
T2SC1195S	94
T2SC1893S	389
T2SC1894S	238
T2SC2068	376
T2SC2068-1	376
T2SC2073	375
T2SC2120Y	289A
T2SC2229-0	399
T2SC2229Y	399
T2SC2230AY	399
T2T	788
T2T-2	788
T2V	736
T3/2	116
T3A	743
T3B	941M
T3G	109
T3S600MPC	5351
T6A10L	5812
T6A40L-B	5814
T6A100L	5817
T7	109
T8/2	116
T8G	109
T9	109
T9G	109
T9G0101003DH	5599
T9G0021003DH	5598
T9G0081003DH	5599
T9G0011003DH	5598
T9G0061003DH	5598
T9G0041003DH	5598
T9G0101203DH	5599
T9G0011203DH	5598
T9G0121003DH	5599
T9G0021203DH	5598
T9G0041203DH	5598
T9G0061203DH	5598
T9G0081203DH	5599
T9G01211111203DH	5599
T9G0121203DH	5599
T11	109
T12	109
T12-1	177
T12-2	177
T12A	177
T12B	177
T12C	177
T12G	109
T13	109

PART NUMBER	NTE REPLACEMENT
T13G	109
T14	109
T14G	109
T16	177
T17	109
T17-A	138A
T17A	138A
T18	109
T20	109
T20G	109
T21	109
T21G	109
T22	109
T22G	109
T23	109
T23-93	196
T23-94	128
T23G	109
T24G	109
T25T117GR5	458
T26G	109
T27G	109
T33Z1	102A
T33Z3	102A
T35A-5	123AP
T39	102A
T40	106
T45	102A
T46	102A
T47	102A
T48	102A
T50	102A
T52A	6006
T52B	6006
T52C	6006
T59	102A
T60	102A
T61	102A
T67A1037K0	2409
T67A1037K0	2409
T72	102A
T74	102A
T74H00B1	74H00
T74H00D1	74H00
T74H00D2	74H00
T74H10B1	74H10
T74H10D1	74H10
T74H10D2	74H10
T74H11B1	74H11
T74H11D1	74H11
T74H11D2	74H11
T74H20B1	74H20
T74H20D1	74H20
T74H20D2	74H20
T74H21B1	74H21
T74H21D1	74H21
T74H21D2	74H21
T74H40B1	74H40
T74H40D1	74H40
T74H40D2	74H40
T74H50B1	74H50
T74H50D1	74H50
T74H50D2	74H50
T74H51B1	74H51
T74H51D1	74H51
T74H51D2	74H51
T74H52B1	74H52
T74H52D1	74H52
T74H52D2	74H52
T74H53B1	74H53
T74H53D1	74H53
T74H53D2	74H53
T74H54B1	74H54
T74H54D1	74H54
T74H54D2	74H54
T74H61B1	74H61
T74H61D1	74H61
T74H61D2	74H61
T74H62B1	74H62
T74H62D1	74H62
T74H62D2	74H62
T74H71B1	74H71
T74H71D2	74H71
T74H72B1	74H72
T74H72D1	74H72
T74H72D2	74H72
T74LS00	74LS00
T74LS00B1	74LS00
T74LS00D1	74LS00
T74LS02	74LS02
T74LS02B1	74LS02
T74LS02D1	74LS02
T74LS03	74LS03
T74LS03B1	74LS03
T74LS03D1	74LS03
T74LS04	74LS04
T74LS04B1	74LS04
T74LS04D1	74LS04
T74LS05	74LS05
T74LS05B1	74LS05
T74LS05D1	74LS05
T74LS08	74LS08
T74LS08B1	74LS08
T74LS08D1	74LS08
T74LS09	74LS09
T74LS09B1	74LS09
T74LS10	74LS10
T74LS10B1	74LS10
T74LS10D1	74LS10
T74LS11	74LS11
T74LS11B1	74LS11
T74LS11D1	74LS11
T74LS14	74LS14
T74LS14B1	74LS14

PART NUMBER	NTE REPLACEMENT
T74LS14D1	74LS14
T74LS15	74LS15
T74LS15B1	74LS15
T74LS15D1	74LS15
T74LS20	74LS20
T74LS20B1	74LS20
T74LS20D1	74LS20
T74LS21	74LS21
T74LS21B1	74LS21
T74LS21D1	74LS21
T74LS22	74LS22
T74LS22B1	74LS22
T74LS22D1	74LS22
T74LS26B1	74LS26
T74LS27	74LS27
T74LS27B1	74LS27
T74LS27D1	74LS27
T74LS28	74LS28
T74LS30	74LS30
T74LS30B1	74LS30
T74LS30D1	74LS30
T74LS32	74LS32
T74LS32B1	74LS32
T74LS32D1	74LS32
T74LS33	74LS33
T74LS37	74LS37
T74LS37B1	74LS37
T74LS37D1	74LS37
T74LS38	74LS38
T74LS38B1	74LS38
T74LS38D1	74LS38
T74LS40	74LS40
T74LS40B1	74LS40
T74LS40D1	74LS40
T74LS42	74LS42
T74LS42B1	74LS42
T74LS51	74LS51
T74LS51B1	74LS51
T74LS51D1	74LS51
T74LS54B1	74LS54
T74LS54D1	74LS54
T74LS55	74LS55
T74LS55B1	74LS55
T74LS55D1	74LS55
T74LS73	74LS73
T74LS73D1	74LS73
T74LS74	74LS74A
T74LS74B1	74LS74A
T74LS74D1	74LS74A
T74LS78	74LS78
T74LS78B1	74LS78
T74LS83	74LS83A
T74LS83B1	74LS83A
T74LS85	74LS85
T74LS85B1	74LS85
T74LS85D1	74LS85
T74LS86	74LS86
T74LS86B1	74LS86
T74LS86D1	74LS86
T74LS90	74LS90
T74LS90B1	74LS90
T74LS92	74LS92
T74LS92B1	74LS92
T74LS93	74LS93
T74LS93B1	74LS93
T74LS93D1	74LS93
T74LS109	74LS109A
T74LS109B1	74LS109A
T74LS109D1	74LS109A
T74LS112	74LS112A
T74LS112B1	74LS112A
T74LS112D1	74LS112A
T74LS113	74LS113
T74LS113B1	74LS113
T74LS114	74LS114
T74LS114B1	74LS114
T74LS125	74LS125A
T74LS125B1	74LS125A
T74LS125D1	74LS125A
T74LS126	74LS126A
T74LS126B1	74LS126A
T74LS132	74LS132
T74LS132B1	74LS132
T74LS132D1	74LS132
T74LS133	74LS133
T74LS133B1	74LS133
T74LS136	74LS136
T74LS136B1	74LS136
T74LS136D1	74LS136
T74LS138	74LS138
T74LS138B1	74LS138
T74LS138D1	74LS139
T74LS139	74LS139
T74LS139B1	74LS139
T74LS139D1	74LS139
T74LS151	74LS151
T74LS151B1	74LS151
T74LS151D1	74LS151
T74LS153	74LS153
T74LS153B1	74LS153
T74LS153D1	74LS153
T74LS155	74LS155
T74LS155B1	74LS155
T74LS155D1	74LS155
T74LS156	74LS156
T74LS156B1	74LS156
T74LS157	74LS157
T74LS157B1	74LS157
T74LS157D1	74LS157
T74LS158	74LS158
T74LS158B1	74LS158
T74LS160	74LS160A
T74LS160B1	74LS160A
T74LS160D1	74LS160A

PART NUMBER	NTE REPLACEMENT
T74LS161	74LS161A
T74LS161B1	74LS161A
T74LS161D1	74LS161A
T74LS162	74LS162A
T74LS162B1	74LS162A
T74LS162D1	74LS162A
T74LS163	74LS163A
T74LS163B1	74LS163A
T74LS163D1	74LS163A
T74LS164	74LS164
T74LS164B1	74LS164
T74LS164D1	74LS164
T74LS168	74LS168A
T74LS168B	74LS168A
T74LS169B	74LS169A
T74LS170	74LS170
T74LS170B1	74LS170
T74LS170D1	74LS170
T74LS173	74LS173A
T74LS173B1	74LS173A
T74LS174	74LS174
T74LS174B1	74LS174
T74LS174D1	74LS174
T74LS175	74LS175
T74LS175B1	74LS175
T74LS175D1	74LS175
T74LS190	74LS190
T74LS190B1	74LS190
T74LS190D1	74LS190
T74LS191	74LS191
T74LS191B1	74LS191
T74LS191D1	74LS191
T74LS193	74LS193
T74LS193B1	74LS193
T74LS193D1	74LS193
T74LS195	74LS195A
T74LS195B1	74LS195A
T74LS195D1	74LS195A
T74LS196	74LS196
T74LS196B1	74LS196
T74LS197	74LS197
T74LS197B1	74LS197
T74LS244B1	74LS244
T74LS253	74LS253
T74LS253B1	74LS253
T74LS253D1	74LS253
T74LS257	74LS257
T74LS257B1	74LS257
T74LS257D1	74LS257
T74LS258	74LS258
T74LS258B1	74LS258
T74LS258D1	74LS258
T74LS259	74LS259
T74LS259B1	74LS259
T74LS259D1	74LS259
T74LS266	74LS266
T74LS266B1	74LS266
T74LS279	74LS279
T74LS279B1	74LS279
T74LS279D1	74LS279
T74LS283	74LS283
T74LS283B1	74LS283
T74LS290	74LS290
T74LS290B1	74LS290
T74LS293	74LS293
T74LS293B1	74LS293
T74LS298	74LS298
T74LS298B1	74LS298
T74LS298D1	74LS298
T74LS352B1	74LS352
T74LS365	74LS365A
T74LS365B1	74LS365A
T74LS366	74LS366A
T74LS366B1	74LS366A
T74LS366D1	74LS366A
T74LS367	74LS367
T74LS367B1	74LS367
T74LS367D1	74LS367
T74LS368	74LS368
T74LS368B1	74LS368
T74LS368D1	74LS368
T74LS374	74LS374
T74LS374B1	74LS374
T74LS393B1	74LS393
T74LS670	74LS670
T74LS670B1	74LS670
T74LS670D1	74LS670
T76	123AP
T77	102A
T78	102A
T81	103A
T82	102A
T83	102A
T83A011790	2407
T83A028127	2408
T83A028140	2408
T84	102A
T87	102A
T87A	116
T87A02412K	2408
T95	102A
T99	102A
T100	102A
T104	102A
T102A	102A
T106A1	5454
T106A1SC	5629
T106A1SD	5629
T106A1SG	5629
T106A1SH	5629
T106A1SS	5629
T106A2	5454
T106A2SC	5629
T106A2SD	5629

PART NUMBER	NTE REPLACEMENT
T106A2SG	5629
T106A2SH	5629
T106A2SS	5629
T106A3	5454
T106A4	5454
T106B1	5455
T106B1SC	5629
T106B1SD	5629
T106B1SG	5629
T106B1SH	5629
T106B1SS	5629
T106B2	5455
T106B2SC	5629
T106B2SD	5629
T106B2SG	5629
T106B2SH	5629
T106B2SS	5629
T106B3	5455
T106B4	5455
T106C1	5456
T106C1SC	5629
T106C1SD	5629
T106C1SG	5629
T106C1SH	5629
T106C1SS	5629
T106C2	5456
T106C2SC	5629
T106C2SD	5629
T106C2SG	5629
T106C2SH	5629
T106C2SS	5629
T106C3	5456
T106C4	5456
T106D1	5457
T106D1SC	5629
T106D1SD	5629
T106D1SG	5629
T106D1SH	5629
T106D1SS	5629
T106D2	5457
T106D2SC	5629
T106D2SD	5629
T106D2SG	5629
T106D2SH	5629
T106D2SS	5629
T106D3	5457
T106D4	5457
T106F1	5453
T106F1SC	5629
T106F1SD	5629
T106F1SG	5629
T106F1SH	5629
T106F1SS	5629
T106F2	5453
T106F2SC	5629
T106F2SD	5629
T106F2SG	5629
T106F2SH	5629
T106F2SS	5629
T106F3	5453
T106F4	5453
T106Q1	5452
T106Q2	5452
T106Q4	5452
T106Y1	5452
T106Y2	5452
T106Y3	5452
T106Y4	5452
T107A3	5454
T107A4	5454
T107B1	5455
T107B2	5455
T107B3	5455
T107B4	5455
T107C1	5456
T107C2	5456
T107C3	5456
T107C4	5456
T107D1	5457
T107D2	5457
T107D3	5457
T107F1	5453
T107F3	5453
T107F4	5453
T107Q1	5452
T107Q2	5452
T107Q3	5452
T107Q4	5452
T107Y1	5452
T107Y2	5452
T107Y3	5452
T107Y4	5452
T108	102A
T109	102A
T 112	159
T112	159
T116	102A
T126	102A
T127	102A
T129	102A
T130	102A
T131	100
T139	104
T142	121
T143	123AP
T151	177
T152	177
T153	177
T154	177
T155	177
T156	116
T157	123AP
T158	123AP
T159	116
T160	102A
T163	160
T170	123AP
T171	123AP
T177-0034	180
T185	123AP
T188-0053	4028B
T188-0106	5374
T188-0109	5652
T200	116
T222	162
T225	162
T235A013-2	123AP
T237	123AP
T246	129
T247	128
T253	160
T253(SEARS)	160
T255	123AP
T256	123AP
T257	124
T261	124
T271	175
T276	159
T277	123AP
T278	160
T279	160
T280	160
T280(SEARS)	126
T281	160
T281(SEARS)	126
T282	160
T282(SEARS)	102A
T287	157
T291	123AP
T300	116
T308	108
T309	234
T327	123AP
T327-2	123AP
T328	123AP
T334-2	129
T336-2	128
T339	123AP
T340	159
T342	123AP
T344	184
T345	185
T346	100
T348	160
T367	160
T368	160
T370	179
T373	160
T374	160
T381	161
T381(SEARS)	161
T386	123AP
T386(SEARS)	108
T396	185
T399	123AP
T400	116
T406	2300
T412F	5700
T416-16(SEARS)	123AP
T417	123AP
T422	188
T423	189
T441	5702
T442	5702
T449	160
T449(SEARS)	126
T450	116
T452	128
T457-16	123AP
T457-16(SEARS)	123AP
T458-16	123AP
T459	129
T459(SEARS)	123AP
T460	123AP
T460(SEARS)	159
T461-16	123AP
T461-16(SEARS)	123AP
T462	123AP
T462(SEARS)	123AP
T464	222
T472	123AP
T472(SEARS)	123AP
T475	129
T475(SEARS)	159
T481(SEARS)	154
T482(SEARS)	159
T483(SEARS)	123AP
T484(SEARS)	123AP
T485(SEARS)	123AP
T486(SEARS)	123AP
T500	116
T511F	5700
T512F	5700
T513	222
T541	5702
T542	5702
T550	116
T576-1	161
T597-1	159
T600	116
T611-1	152
T611-1(RCA)	184
T612-1	152
T612-1(RCA)	184
T615A002	123AP
T615A006-1	123AP
T650	116
T650(TRANS)	123AP
T700-709	109
T800	125
T800X	125
T811	160
T814	158
T815	158
T841	181
T842	181
T843	181
T844	181
T880	198
T900	159
T1000	158
T1000X	125
T1001	102A
T1002	102A
T1002A	102A
T1003	102A
T1003-521	108
T1004	102A
T1005	102A
T1006	102A
T1007	102A
T1007(ZENITH)	199
T1008	102A
T1008-834	123AP
T1009	102A
T1010	102A
T1011	160
T1012	160
T1012BH	5633
T1012DH	5635
T1012MH	5637
T1013	102A
T1013BH	5633
T1013DH	5635
T1013MH	5637
T1023	102A
T1028	160
T1032	160
T1033	160
T1034	160
T1036	102A
T1037	102A
T1038	160
T1040	104
T1041	104
T1042	102A
T1043	102A
T1046	102A
T1047	102A
T1076	102A
T1085	116
T1166	160
T1167	121
T1168	121
T1202	102A
T1202(GE)	161
T1203	102A
T1208	132
T1224	160
T1225	160
T1232	160
T1233	160
T1250	160
T1251	100
T1275	129
T1276	129
T1289	100
T1291	100
T1298	160
T1299	160
T1300	102A
T1305	160
T1306	160
T1310	102A
T1312	100
T1314	160
T1322	100
T1326	100
T1327	102A
T1328	102A
T1334	102A
T1340A3H	128
T1340A3I	123AP
T1340A3J	123AP
T1340A3K	123AP
T1340A31	123AP
T1341A3K	199
T1342	102A
T1346	102A
T1352	102A
T1363	102A
T1364	102A
T1366	104
T1366A	104
T1367	104
T1367A	104
T1368	104
T1368A	104
T1369	104
T1369A	104
T1370	104
T1370A	104
T1387	160
T1388	160
T1389	160
T1390	160
T1391	160
T1396	176
T1397	176
T1400	160
T1401	160
T1402	199
T1403	160
T1408	229
T1413	123AP
T1414	123AP
T1415	123AP
T1416	123AP
T1417	123AP
T1450	116
T1454	160
T1459	160
T1460	126
T1461	160
T1474	100
T1480E	506
T1486	152
T1487	152
T1495	123AP
T1510	100
T1524	126
T1524BRN	126
T1524BRN/RED	126
T1546	102A
T1548	160
T1559	102A
T1573	102A
T1574	102A
T1577	102A
T1583	102A
T1593	102A
T1594	102A
T1595	102A
T1596	102A
T1597	102A
T1598	102A
T1599	102A
T1601	121
T1602	159
T1613BH	56004
T1613DH	56006
T1613MH	56008
T1613NH	56010
T1618	160
T1642B	123AP
T1654	126
T1654BLU	126
T1657	160
T1690	160
T1691	160
T1692	160
T1706	128
T1706A	128
T1706B	128
T1706C	128
T1731	222
T1737	160
T1738	160
T1740	102A
T1746	123AP
T1746A	123AP
T1746B	123AP
T1746C	123AP
T1748	123AP
T1748A	123AP
T1748B	123AP
T1748C	123AP
T1788	160
T1802	123AP
T1802A	123AP
T1802B	123AP
T1804	123AP
T1805	123AP
T1808	129
T1808A	129
T1808B	129
T1808C	129
T1808D	129
T1808E	129
T1810	123AP
T1810B	123AP
T1811	128
T1811E	128
T1811G	128
T1814	160
T1831	160
T1877	100
T1902	100
T1903	102A
T1904	102A
T1909	123AP
T1961	102A
T2015	160
T2016	160
T2017	160
T2019	160
T2020	160
T2021	160
T2022	160
T2024	160
T2025	160
T2026	160
T2028	160
T2029	160
T2030	160
T2038	100
T2039	100
T2040	100
T2062	783
T2091	100
T2122	100
T2159	102A
T2172	100
T2173	100
T2191	160
T2256	100
T2257	100
T2258	100
T2259	100
T2260	100
T2261	100
T2300A	5650
T2300B	5651
T2300D	5652
T2301A	5650
T2301B	5651
T2301D	5652
T2301F	5650
T2302A	5640
T2302B	5651
T2302D	5642
T2302F	5650
T2304B	5651
T2304D	5643
T2305B	5641
T2306A	5640
T2306B	5641
T2306D	5642
T2310A	5640
T2310B	5651
T2310D	5642
T2312A	5640
T2312B	5641
T2312D	5642
T2312F	5640
T2313A	5640
T2313B	5641
T2313D	5642
T2313M	5643
T2320A	5629
T2320B	5629
T2320C	5629
T2320D	5629
T2320F	5629
T2322	126
T2322A3T2322B	5629
T2323	126
T2324	126
T2327A	5629
T2327B	5629
T2327C	5629
T2327D	5629
T2327F	5629
T2357	106
T2364	160
T2379	160
T2384	160
T2439	102A
T2440	102A
T2441	102A
T2446	123AP
T2500B	5608
T2500D	5608
T2500E	5609
T2500M	5609
T2500N	5610
T2508	1751
T2513MH	56017
T2515	102A
T2517	102A
T2634	108
T2788	160
T2800A	5608
T2800B	5608
T2800C	5608
T2800D	5608
T2800E	5609
T2800F	5608
T2800M	5609
T2801A	5608
T2801B	5608
T2801C	5608
T2801D	5608
T2801DF	5636
T2801E	5609
T2801F	5608
T2801M	5609
T2802A	5608
T2802B	5608
T2802C	5608
T2802D	5608
T2802E	5609
T2802F	5608
T2802M	5609
T2802S	5610
T2806B	5633
T2806D	5635
T2850A	5632
T2850B	5633
T2850D	5635
T2878	160
T2896	160
T2945	160
T2946	160
T3005	102A
T3321	102A
T3322	102A
T3530	108
T3535	108
T3536	108
T3539	108
T3565	123AP
T3568	107
T3568(RCA)	108
T3570	159
T3570A	159
T3601	123AP
T3601(RCA)	107
T4100E	5690
T4100F	5688
T4100M	5690
T4101E	5690
T4101F	5688
T4101M	5690
T4110M	5677
T4111M	5677
T4113B	5673
T4113D	5675
T4114B	5673
T4114D	5675
T4115B	5673
T4115D	5675
T4116B	5673
T4116D	5675
T4117B	5673
T4117D	5675
T4120B	56022
T4120D	56024
T4120M	56026
T4121M	56026
T4205L1	128
T4590	110MP
T4706D	5675
T6028	126
T6029	126
T6030	126
T6031	126
T6032	126
T6058	160
T6260B	5679
T6260C	5679
T6260D	5679
T6260E	5679
T6260M	5679
T6261B	5679
T6261C	5679
T6261D	5679
T6261E	5679
T6261M	5679
T6400B	5688
T6400D	5689
T6400M	5690
T6401B	5688
T6401D	5689
T6401M	5690
T6410B	5693
T6410D	5695
T6410M	5697
T6411B	5693
T6411D	5695
T6411M	5697
T6414B	5693
T6414D	5695
T6415B	5683
T6415D	5697
T6416B	5693
T6416D	5695
T6416M	5697
T6417B	5693
T6417D	5695
T6417M	5697
T6420	5697
T6420A	56022
T6420B	56022
T6420D	56024
T6420E	56026
T6420F	56022
T6420M	56026
T6421B	56022
T6421D	56024
T6421E	56026
T6421F	56022
T6421M	56026
T6565	123AP
T7400B1	7400
T7400D1	7400
T7400D2	7400
T7401B1	7401
T7401D1	7401
T7401D2	7401
T7402B1	7402
T7402D1	7402
T7402D2	7402
T7403B1	7403
T7403D1	7403
T7403D2	7403
T7404B1	7404
T7405B1	7405
T7406B1	7406
T7407B1	7407
T7408B1	7408
T7408D1	7408
T7408D2	7408
T7409B1	7409
T7409D1	7409
T7409D2	7409
T7410B1	7410
T7410D1	7410
T7410D2	7410
T7416B1	7416
T7420B1	7420
T7420D1	7420
T7420D2	7420
T7426B1	7426
T7426D1	7426
T7426D2	7426
T7428B1	7428
T7428D1	7428
T7428D2	7428
T7430B1	7430
T7430D1	7430
T7430D2	7430
T7433B1	7433
T7433D1	7433
T7433D2	7433
T7440B1	7440
T7440D1	7440
T7440D2	7440
T7441AB1	7441
T7441AD1	7441
T7441AD2	7441
T7442B1	7442
T7442D1	7442
T7442D2	7442
T7443B1	7443
T7443D1	7443
T7443D2	7443
T7444B1	7444
T7444D1	7444
T7444D2	7444
T7450B1	7450
T7450D1	7450
T7450D2	7450
T7451B1	7451
T7451D1	7451
T7451D2	7451
T7453B1	7453
T7453D1	7453
T7453D2	7453
T7454B1	7454
T7454D1	7454
T7454D2	7454
T7460B1	7460
T7460D1	7460
T7460D2	7460
T7472B1	7472
T7472D1	7472
T7472D2	7472
T7473B1	7473
T7473D1	7473
T7473D2	7473
T7474B1	7474
T7474D1	7474
T7474D2	7474
T7475B1	7475
T7476B1	7476
T7476D1	7476
T7476D2	7476
T7486B1	7486
T7486D1	7486
T7486D2	7486
T7490B1	7490
T7490D1	7490
T7490D2	7490
T7492B1	7492
T7492D1	7492
T7492D2	7492
T7493B1	7493A
T7493D1	7493A
T7493D2	7493A
T9011A1C	123AP
T9011A1G	123AP
T9011AZ	123AP
T9011CD	108
T9011EF	108
T9011G	108
T9011G(CD)	123AP
T9011G(EF)	123AP
T9011GEF	108
T9011GH	108
T9011H	108
T9011H(EF)	123AP
T9011HEF	108
T9011I	108
T9011I(EF)	123AP
T9011J	108
T9011J(GH)	123AP
T9016F	108
T9016H	108
T9418	293
T9423	229
T9468	294
T9631	128
T9681	159
T10010	102A
T10085	102A
T10144	116
T10175	116
T10185	116
T10195	166
T10453	116
T11618	102A
T13000	102A
T13015	128
T13029	121
T21237	109
T21238	109
T21271	109
T21312	116
T21313	109
T21333	116
T21334	139A
T21507	116
T21600	177
T21601	614
T21602	116
T21638	117
T21639	139A
T21649	116
T21679	116
T30155	117
T30155-001	116
T30155-1	116
T40992	1691
T40993	1692
T42692-001	116
T42692-1R	116
T50339A	102A

PART NUMBER	NTE REPLACEMENT
T50631	102A
T50818	126
T50931B	102
T50933B	158
T50944	100
T51573A	102
T52054	126
T52147	100
T52147Z	100
T52148Z	100
T52149	100
T52149Z	100
T52150	102A
T52150Z	102A
T52151	102A
T52151Z	102A
T52159	102A
T59235A	123AP
T59247	102A
T59249	102A
T59276	101
T59277	101
T74107B1	74107
T74180B1	74180
T74193B1	74193
T89412	911
T152148	100
T164213	128
T250117GR5	458
T607011B4BT	5374
T1003521	108
T1004671	123AP
T1008834	123AP
T507074084AQ	5372
T507077084AQ	5372
T5070780B4AQ	5372
T507084084AA	5369
T507084084AQ	5372
T507087084AA	5369
T507087084AQ	5372
T5070880B4AA	5369
T5070880B4AQ	5372
T507094084AA	5369
T507094084AQ	5372
T507097084AA	5369
T507097084AQ	5372
T5070980B4AA	5369
T5070980B4AQ	5372
T507104084AA	5369
T507104084AQ	5372
T507107084AA	5369
T507108084AA	5369
T507108084AQ	5372
T5071140B4AA	5369
T5071140B4AQ	5372
T5071170B4AQ	5372
T5071180B4AA	5369
T5071180B4AQ	5372
T5071240B4AA	5369
T5071240B4AQ	5372
T507127084AQ	5372
T507128084AA	5369
T507128084AQ	5372
T6070115B4BT	5374
T6070118B4BT	5374
T6070413B4BT	5374
T6070415B4BT	5374
T6070418B4BT	5374
T6070513B4BT	5374
T6070515B4BT	5374
T6070613B4BT	5374
T6070615B4BT	5374
T6070618B4BT	5374
T6070815B4BT	5375
T6070818B4BT	5375
T6070913N4BT	5375
T6070915B4BT	5375
T6070918B4BT	5375
T6071015B4BT	5375
T6071113B4BT	5375
T6071115B4BT	5375
T6071215B4BT	5375
T6071218B4BT	5375
T7070128B4Y	5377
T7070330B4BY	5377
T7070125B4BY	5378
T7071230B4BY	5378
T727063 5B4DN	5386
T22000104E	312
T60710113B4BT	5375
T62711264DN	5381
T70701025B4BY	5378
T70701030B4BY	5378
T220001040	312
T400001016	5501
T400001018	5501
T400011018	5502
T400021016	5504
T400021018	5504
T400031016	5506
T400031018	5506
T400041016	5507
T400041018	5507
T400051016	5509
T400051018	5509
T400061018	5509
T407185152	159
T500061016	5509
T500074005AB	5579
T500078005AB	5579
T500084005AB	5579
T500088005AB	5579
T500094005AB	5579
T500098005AB	5579
T500104004AA	5579
T500108005AB	5579
T500114005AB	5579
T500118005AB	5579
T500124005AB	5579
T507014034AQ	5371
T507014044AQ	5371
T507014054AQ	5371
T507014064AQ	5371
T507014074AQ	5371
T507014084AQ	5371
T507017044AQ	5371
T507017054AQ	5371
T507017064AQ	5371
T507017074AQ	5371
T507017084AQ	5371
T507018034AQ	5371
T507018044AQ	5371
T507018054AQ	5371
T507018064AQ	5371
T507018074AQ	5371
T507018084AQ	5371
T507024034AQ	5371
T507024044AQ	5371
T507024054AQ	5371
T507024064AQ	5371
T507024074AQ	5371
T507024084AQ	5371
T507027034AQ	5371
T507027044AQ	5371
T507027054AQ	5371
T507027064AQ	5371
T507027074AQ	5371
T507027084AQ	5371
T507028034AQ	5371
T507028044AQ	5371
T507028054AQ	5371
T507028064AQ	5371
T507028074AQ	5371
T507028084AQ	5371
T507034034AQ	5371
T507034044AQ	5371
T507034054AQ	5371
T507034064AQ	5371
T507034074AQ	5371
T507034084AQ	5371
T507037034AQ	5371
T507037044AQ	5371
T507037054AQ	5371
T507037064AQ	5371
T507037084AQ	5371
T507038034AQ	5371
T507038044AQ	5371
T507038054AQ	5371
T507038064AQ	5371
T507038084AQ	5371
T507044034AQ	5371
T507044044AQ	5371
T507044054AQ	5371
T507044064AQ	5371
T507044074AQ	5371
T507044084AQ	5371
T507047034AQ	5371
T507047044AQ	5371
T507047054AQ	5371
T507047064AQ	5371
T507047074AQ	5371
T507047084AQ	5371
T507048034AQ	5371
T507048044AQ	5371
T507048054AQ	5371
T507048064AQ	5371
T507048074AQ	5371
T507048084AQ	5371
T507054034AQ	5371
T507054044AQ	5371
T507054054AQ	5371
T507054064AQ	5371
T507054074AQ	5371
T507054084AQ	5371
T507057034AQ	5371
T507057044AQ	5371
T507057054AQ	5371
T507057064AQ	5371
T507057074AQ	5371
T507057084AQ	5371
T507058034AQ	5371
T507058044AQ	5371
T507058054AQ	5371
T507058064AQ	5371
T507058074AQ	5371
T507058084AQ	5371
T507064034AQ	5371
T507064044AQ	5371
T507064054AQ	5371
T507064064AQ	5371
T507064074AQ	5371
T507064084AQ	5371
T507067034AQ	5371
T507067044AQ	5371
T507067054AQ	5371
T507067064AQ	5371
T507067074AQ	5371
T507067084AQ	5371
T507068034AQ	5371
T507068044AQ	5371
T507068054AQ	5371
T507068064AQ	5371
T507068074AQ	5371
T507068084AQ	5371
T507074034AA	5369
T507074034AQ	5372
T507074044AQ	5372
T507074054AA	5369
T507074054AQ	5372
T507074064AA	5369
T507074064AQ	5372
T507074074AA	5369
T507074074AQ	5372
T507074084AA	5369
T507077034AA	5369
T507077034AQ	5372
T507077044AA	5369
T507077044AQ	5372
T507077054AA	5369
T507077054AQ	5372
T507077064AA	5369
T507077064AQ	5372
T507077074AA	5369
T507077074AQ	5372
T507077084AA	5369
T507077084AQ	5372
T507078034AA	5369
T507078034AQ	5372
T507078044AA	5369
T507078044AQ	5372
T507078054AA	5369
T507078054AQ	5372
T507078064AA	5369
T507078064AQ	5372
T507078074AA	5369
T507078074AQ	5372
T507084034AA	5369
T507084044AA	5369
T507084044AQ	5372
T507084054AA	5369
T507084054AQ	5372
T507084064AA	5369
T507084064AQ	5372
T507084074AA	5369
T507084074AQ	5372
T507084084AA	5369
T507087034AA	5369
T507087034AQ	5372
T507087044AA	5369
T507087044AQ	5372
T507087054AA	5369
T507087054AQ	5372
T507087064AA	5369
T507087064AQ	5372
T507087074AA	5369
T507087074AQ	5372
T507087084AA	5369
T507087084AQ	5372
T507088034AA	5369
T507088034AQ	5372
T507088044AA	5369
T507088044AQ	5372
T507088054AA	5369
T507088054AQ	5372
T507088064AA	5369
T507088064AQ	5372
T507088074AA	5369
T507088074AQ	5372
T507088084AA	5372
T507094034AA	5369
T507094034AQ	5372
T507094044AA	5369
T507094044AQ	5372
T507094054AA	5369
T507094054AQ	5372
T507094064AA	5369
T507094064AQ	5372
T507094074AA	5369
T507094074AQ	5372
T507094084AQ	5372
T507097034AA	5369
T507097034AQ	5372
T507097044AA	5369
T507097044AQ	5372
T507097054AA	5369
T507097054AQ	5372
T507097064AA	5369
T507097064AQ	5372
T507097074AA	5369
T507097074AQ	5372
T507097084AA	5369
T507097084AQ	5372
T507098034AA	5369
T507098034AQ	5372
T507098044AA	5369
T507098044AQ	5372
T507098054AA	5369
T507098054AQ	5372
T507098064AA	5369
T507098064AQ	5372
T507098074AA	5369
T507098074AQ	5372
T507104044AA	5369
T507104044AQ	5372
T507104054AA	5372
T507104064AA	5369
T507104064AQ	5372
T507107034AA	5369
T507107054AA	5369
T507107054AQ	5372
T507107064AQ	5372
T507107074AA	5369
T507107074AQ	5372
T507108034AA	5369
T507108034AQ	5372
T507108044AA	5369
T507108044AQ	5372
T507108054AA	5369
T507108054AQ	5372
T507108064AA	5369
T507108064AQ	5372
T507108074AA	5369
T507108074AQ	5372
T507108084AA	5369
T507114034AA	5369
T507114034AQ	5372
T507114044AA	5369
T507114044AQ	5372
T507114054AA	5369
T507114064AA	5369
T507114064AQ	5372
T507114074AA	5369
T507114074AQ	5372
T507117034AA	5369
T507117034AQ	5372
T507117044AA	5369
T507117044AQ	5372
T507117054AA	5369
T507117054AQ	5372
T507117064AQ	5372
T507117074AA	5369
T507117074AQ	5372
T507118034AA	5369
T507118034AQ	5372
T507118044AA	5369
T507118044AQ	5372
T507118054AA	5369
T507118054AQ	5372
T507118064AQ	5372
T507118074AA	5369
T507118074AQ	5372
T507124034AA	5369
T507124034AQ	5372
T507124044AA	5369
T507124044AQ	5372
T507124054AA	5369
T507124054AQ	5372
T507124064AA	5369
T507124064AQ	5372
T507124074AA	5369
T507124074AQ	5372
T507124084AQ	5372
T507127034AA	5369
T507127044AA	5369
T507127044AQ	5372
T507127054AA	5369
T507127054AQ	5372
T507127064AA	5369
T507127064AQ	5372
T507127074AA	5369
T507127074AQ	5372
T507128034AA	5369
T507128034AQ	5372
T507128044AA	5369
T507128044AQ	5372
T507128054AQ	5372
T507128064AA	5369
T507128064AQ	5372
T507128074AA	5369
T507128074AQ	5372
T507128084AQ	5372
T607011334BT	5374
T607011344BT	5374
T607011354BT	5374
T607011364BT	5374
T607011374BT	5374
T607011384BT	5374
T607011534BT	5374
T607011544BT	5374
T607011554BT	5374
T607011564BT	5374
T607011574BT	5374
T607011834BT	5374
T607011854BT	5374
T607011864BT	5374
T607011874BT	5374
T607011884BT	5374
T607021334BT	5374
T607021344BT	5374
T607021354BT	5374
T607021364BT	5374
T607021374BT	5374
T607021534BT	5374
T607021544BT	5374
T607021554BT	5374
T607021574BT	5374
T607021584BT	5374
T607021834BT	5374
T607021844BT	5374
T607021854BT	5374
T607021864BT	5374
T607021874BT	5374
T607021884BT	5374
T607022554DN	5380
T607031334BT	5374
T607031344BT	5374
T607031354BT	5374
T607031364BT	5374
T607031374BT	5374
T607031534BT	5374
T607031544BT	5374
T607031554BT	5374
T607031564BT	5374
T607031574BT	5374
T607041334BT	5374
T607041344BT	5374
T607041354BT	5374
T607041364BT	5374
T607041374BT	5374
T607041384BT	5374
T607041534BT	5374
T607041544BT	5374
T607041554BT	5374
T607041564BT	5374
T607041574BT	5374
T607041584BT	5374
T607041834BT	5374
T607041844BT	5374
T607041854BT	5374
T607041864BT	5374
T607041874BT	5374
T607041884BT	5374
T607042564DN	5380
T607051334BT	5374
T607051344BT	5374
T607051354BT	5374
T607051364BT	5374
T607051374BT	5374
T607051384BT	5374
T607051534BT	5374
T607051544BT	5374
T607051554BT	5374
T607051564BT	5374
T607051574BT	5375
T607051584BT	5374
T607051834BT	5374
T607051844BT	5374
T607051854BT	5374
T607051864BT	5374
T607051874BT	5374
T607051884BT	5374
T607061334BT	5374
T607061344BT	5374
T607061354BT	5374
T607061364BT	5374
T607061374BT	5374
T607061384BT	5374
T607061534BT	5374
T607061544BT	5374
T607061554BT	5374
T607061564BT	5374
T607061574BT	5374
T607061844BT	5374
T607061854BT	5374
T607061864BT	5374
T607061874BT	5374
T607061884BT	5374
T607071334BT	5375
T607071344BT	5375
T607071354BT	5375
T607071364BT	5375
T607071374BT	5375
T607071384BT	5375
T607071534BT	5375
T607071544BT	5375
T607071554BT	5375
T607071564BT	5375
T607071834BT	5375
T607071844BT	5375
T607071864BT	5375
T607071874BT	5375
T607071884BT	5375
T607081334BT	5375
T607081344BT	5375
T607081354BT	5375
T607081374BT	5375
T607081384BT	5375
T607081534BT	5375
T607081544BT	5375
T607081554BT	5375
T607081564BT	5375
T607081574BT	5375
T607081584BT	5375
T607081834BT	5375
T607081844BT	5375
T607081854BT	5375
T607081864BT	5375
T607081874BT	5375
T607081884BT	5375
T607091334BT	5375
T607091344BT	5375
T607091354BT	5375
T607091364BT	5375
T607091374BT	5375
T607091384BT	5375
T607091534BT	5375
T607091544BT	5375
T607091554BT	5375
T607091564BT	5375
T607091574BT	5375
T607091584BT	5375
T607091834BT	5375
T607091844BT	5375
T607091854BT	5375
T607091864BT	5375
T607091874BT	5375
T607091884BT	5375
T607101344BT	5375
T607101354BT	5375
T607101364BT	5375
T607101374BT	5375
T607101534BT	5375
T607101544BT	5375
T607101564BT	5375
T607101574BT	5375
T607101834BT	5375
T607101844BT	5375
T607101854BT	5375
T607101864BT	5375
T607101874BT	5375
T607111344BT	5375
T607111354BT	5375
T607111364BT	5375
T607111534BT	5375
T607111554BT	5375
T607111564BT	5375
T607111834BT	5375
T607111844BT	5375
T607111854BT	5375
T607111864BT	5375
T607121344BT	5375
T607121354BT	5375
T607121364BT	5375
T607121534BT	5375
T607121544BT	5375
T607121554BT	5375
T607121564BT	5375
T607121834BT	5375
T607121844BT	5375
T607121854BT	5375
T607121864BT	5375
T627011534DN	5380
T627011544DN	5380
T627011554DN	5380
T627011564DN	5380
T627011574DN	5380
T627011584DN	5380
T627012034DN	5380
T627012044DN	5380
T627012054DN	5380
T627012064DN	5380
T627012074DN	5380
T627012084DN	5380
T627012534DN	5380
T627012544DN	5380
T627012554DN	5380
T627012564DN	5380
T627012574DN	5380
T627012584DN	5380
T627012534DN	5380
T627021544DN	5380
T627021554DN	5380
T627021564DN	5380
T627021574DN	5380
T627022034DN	5380
T627022044DN	5380
T627022054DN	5380
T627022064DN	5380
T627022074DN	5380
T627022084DN	5380
T627022534DN	5380
T627022544DN	5380
T627022554DN	5380
T627022564DN	5380
T627022574DN	5380
T627031534DN	5380
T627031554DN	5380
T627031564DN	5380
T627031574DN	5380
T627031584DN	5380
T627032034DN	5380
T627032044DN	5380
T627032054DN	5380
T627032064DN	5380
T627032074DN	5380
T627032084DN	5380
T627032534DN	5380
T627032544DN	5380
T627032554DN	5380
T627032564DN	5380
T627032574DN	5380
T627032584DN	5380
T627041534DN	5380
T627041544DN	5380
T627041554DN	5380
T627041564DN	5380
T627041574DN	5380
T627041584DN	5380
T627042034DN	5380
T627042044DN	5380
T627042054DN	5380
T627042064DN	5380
T627042074DN	5380
T627042084DN	5380
T627042534DN	5380
T627042544DN	5380
T627042554DN	5380
T627042564DN	5380
T627042574DN	5380
T627051544DN	5380
T627051554DN	5380
T627051564DN	5380
T627051574DN	5380
T627051584DN	5380
T627052034DN	5380
T627052044DN	5380
T627052054DN	5380
T627052064DN	5380
T627052074DN	5380
T627052084DN	5380
T627052534DN	5380
T627052544DN	5380
T627052554DN	5380
T627052564DN	5380
T627052574DN	5380
T627052584DN	5380
T627061534DN	5380
T627061544DN	5380
T627061554DN	5380
T627061564DN	5380
T627061574DN	5380
T627061584DN	5380
T627062034DN	5380
T627062044DN	5380
T627062054DN	5380
T627062064DN	5380
T627062074DN	5380
T627062084DN	5380
T627062534DN	5380
T627062544DN	5380
T627062554DN	5380
T627062564DN	5380
T627062574DN	5380
T627062584DN	5380
T627071534DN	5381
T627071544DN	5381
T627071554DN	5381
T627071564DN	5381
T627071574DN	5381
T627071584DN	5381
T627072034DN	5381
T627072044DN	5381
T627072054DN	5381
T627072064DN	5381
T627072074DN	5381
T627072084DN	5381
T627072534DN	5381
T627072544DN	5381
T627072554DN	5381
T627072564DN	5381
T627072574DN	5381
T627072584DN	5381
T627081534DN	5381
T627081544DN	5381
T627081554DN	5381
T627081564DN	5381
T627081574DN	5381
T627081584DN	5381
T627082034DN	5381
T627082044DN	5381
T627082054DN	5381
T627082064DN	5381
T627082074DN	5381
T627082084DN	5381
T627082534DN	5381
T627082544DN	5381
T627082554DN	5381
T627082564DN	5381
T627082574DN	5381
T627082584DN	5381
T627091534DN	5381
T627091544DN	5381
T627091554DN	5381
T627091564DN	5381
T627091574DN	5381
T627091584DN	5381
T627092034DN	5381
T627092044DN	5381
T627092054DN	5381
T627092064DN	5381
T627092074DN	5381
T627092084DN	5381
T627092534DN	5381
T627092544DN	5381
T627092554DN	5381
T627092564DN	5381
T627092574DN	5381
T627092584DN	5381
T627101534DN	5381
T627101544DN	5381
T627101554DN	5381
T627101564DN	5381
T627101574DN	5381
T627101584DN	5381
T627102034DN	5381
T627102044DN	5381
T627102054DN	5381
T627102064DN	5381
T627102074DN	5381
T627102084DN	5381
T627102534DN	5381
T627102544DN	5381
T627102554DN	5381
T627102564DN	5381
T627102574DN	5381
T627102584DN	5381
T627111534DN	5381
T627111544DN	5381
T627111554DN	5381
T627111564DN	5381
T627111574DN	5381
T627111584DN	5381
T627112034DN	5381
T627112044DN	5381
T627112054DN	5381
T627112064DN	5381
T627112074DN	5381
T627112084DN	5381
T627112534DN	5381
T627112544DN	5381
T627112554DN	5381
T627112564DN	5381
T627112574DN	5381
T627112584DN	5381
T627121534DN	5381
T627121544DN	5381
T627121554DN	5381
T627121564DN	5381
T627121574DN	5381
T627121584DN	5381
T627122034DN	5381
T627122044DN	5381
T627122054DN	5381
T627122064DN	5381
T627122074DN	5381
T627122084DN	5381
T627122534DN	5381
T627122544DN	5381
T627122554DN	5381
T627122564DN	5381
T627122574DN	5381

PART NUMBER	NTE REPLACEMENT
T627122584DN	5381
T700022504BY	5587
T700023004BY	5587
T700023504BY	5587
T700042504BY	5587
T700043004BY	5587
T700043504BY	5587
T700062504	5587
T700062504BY	5587
T700063004BY	5587
T700063504BY	5587
T707012524BY	5377
T707012534BY	5377
T707012544BY	5377
T707012554BY	5377
T707012834BY	5377
T707012844BY	5377
T707013024BY	5377
T707013034BY	5377
T707013044BY	5377
T707013054BY	5377
T707022524BY	5377
T707022534BY	5377
T707022544BY	5377
T707022554BY	5377
T707022844BY	5377
T707022854BY	5377
T707023034BY	5377
T707023044BY	5377
T707023054BY	5377
T707032524BY	5377
T707032544BY	5377
T707032554BY	5377
T707032834BY	5377
T707032844BY	5377
T707032854BY	5377
T707033024BY	5377
T707033034BY	5377
T707033044BY	5377
T707033054NY	5377
T707042524BY	5377
T707042544BY	5377
T707042834BY	5377
T707042844BY	5377
T707042854BY	5377
T707043024BY	5377
T707043034BY	5377
T707043044BY	5377
T707043054BY	5377
T707052524BY	5377
T707052534BY	5377
T707052544BY	5377
T707052554BY	5377
T707052834BY	5377
T707052844BY	5377
T707052854BY	5377
T707053024BY	5377
T707053034BY	5377
T707053044BY	5377
T707053054BY	5377
T707062524BY	5377
T707062534BY	5377
T707062544BY	5377
T707062554BY	5377
T707062834BY	5377
T707062844BY	5377
T707062854BY	5377
T707063024BY	5377
T707063034BY	5377
T707063044BY	5377
T707063054BY	5377
T707072524BY	5378
T707072534BY	5378
T707072544BY	5378
T707072554BY	5378
T707072834BY	5378
T707072844BY	5378
T707072854BY	5378
T707073024BY	5378
T707073034BY	5378
T707073044BY	5378
T707073054BY	5378
T707082524BY	5378
T707082534BY	5378
T707082544BY	5378
T707082554BY	5378
T707082834BY	5378
T707082844BY	5378
T707082854BY	5378
T707083024BY	5378
T707083034BY	5378
T707083044BY	5378
T707083054BY	5378
T707092524BY	5378
T707092534BY	5378
T707092544BY	5378
T707092554BY	5378
T707093024BY	5378
T707093034BY	5378
T707093044BY	5378
T707093054BY	5378
T707102524BY	5378
T707102534BY	5378
T707102544BY	5378
T707103024BY	5378
T707103034BY	5378
T707112524BY	5378
T707112544BY	5378
T707112554BY	5378
T707113034BY	5378
T707113054BY	5378
T707122524BY	5378
T707122534BY	5378
T707122544BY	5378
T707122554BY	5378
T707123024BY	5378
T707123034BY	5378
T707123044BY	5378
T707123054BY	5378
T710022504BY	5587
T710023004BY	5587
T710023504BY	5587
T710042504BY	5587
T710043004BY	5587
T710043504BY	5587
T710062504BY	5587
T710063004BY	5587
T710063504BY	5587
T720083504DN	5596
T720084504DN	5596
T720085504DN	5596
T720103504DN	5596
T720104504DN	5596
T720105504DN	5596
T720123504DN	5596
T720124504DN	5596
T720125504DN	5596
T727013524DN	5386
T727013534DN	5386
T727013544DN	5386
T727013554DN	5386
T727023524DN	5386
T727023534DN	5386
T727023544DN	5386
T727023554DN	5386
T727043524DN	5386
T727043534DN	5386
T727043544DN	5386
T727043554DN	5386
T727053524DN	5386
T727053534DN	5386
T727053544DN	5386
T727053554DN	5386
T727063524DN	5386
T727063534DN	5386
T727063544DN	5386
T727063554DN	5386
T727073524DN	5387
T727073534DN	5387
T727073544DN	5387
T727073554DN	5387
T727083524DN	5387
T727083534DN	5387
T727083544DN	5387
T727083554DN	5387
T727093524DN	5387
T727093534DN	5387
T727093544DN	5387
T727093554DN	5387
T727103524DN	5387
T727103534DN	5387
T727103544DN	5387
T727103554DN	5387
T727113524DN	5387
T727113534DN	5387
T727113544DN	5387
T727113554DN	5387
T730013504DN	5594
T730014504DN	5594
T730015504DN	5594
T730023504DN	5594
T730024504DN	5594
T730025504DN	5594
T730043504DN	5595
T730044504DN	5595
T730045504DN	5595
T730063504DN	5595
T730064504DN	5595
T730065504DN	5595
T4000011016	5502
T7070112534BY	5378
T7070325348BY	5377
T7070825534BY	5378
T-00014	102A
T-0150	116
T-065	116
T-075	116
T-04689	128
T-13	116
T-13G	116
T-14	116
T-14G	116
T-22G	116
T-23	102A
T-26G	116
T-33Z1	102A
T-33Z3	102A
T-39	102A
T-46	100
T-47	100
T-48	100
T-50	116
T-78	100
T-81	103A
T-82	100
T-95	102A
T-99	160
T-100	116
T-101	121
T-109	100
T-116	100
T-126	102A
T-127	121
T-129	102A
T-130	102A
T-131	158
T-163	160
T-200	116
T-203	107
T-235	121
T-246	159
T-251	159
T-255	123AP
T-256	123AP
T-278	160
T-279	160
T-291	128
T-300	116
T-339	128
T-340	129
T-342	184
T-344	184
T-345	185
T-348	126
T-396	185
T-399	123AP
T-400	116
T-450	116
T-481	154
T-482	129
T-483	108
T-484	108
T-486	108
T-500	116
T-550	116
T-600	116
T-650	116
T-700-709	109
T-750-713	109
T-750-714	139A
T-1000	125
T-1000X	125
T-1363	126
T-1364	126
T-1416	123AP
T-1460	126
T-1877	100
T-2028	160
T-2029	160
T-2030	160
T-2038	100
T-2039	100
T-2040	100
T-2062	506
T-2091	100
T-2122	102
T-2357	106
T-2439	100
T-2440	100
T-2441	100
T-2508	1751
T-3321	102A
T-3322	102A
T-3568	161
T-4590	116
T-6028	126
T-6029	126
T-6030	126
T-6031	126
T-6032	126
T-10010	519
T-52148Z	100
T-52149	100
T-52149Z	100
T-52150	102A
T-52150Z	102A
T-52151	102A
T-52151Z	102A
T-152148	100
T-E01029D	116
T-E1011	116
T-E1014	109
T-E1024	116
T-E1024C	116
T-E1024D	116
T-E1029	507
T-E1031	109
T-E1042	166
T-E1050	116
T-E1061	113A
T-E1061A	113A
T-E1064	116
T-E1068	142A
T-E1077	142A
T-E1078	116
T-E1078A	116
T-E1080	116
T-E1086	113A
T-E1086A	113A
T-E1088	116
T-E1089	116
T-E1090	116
T-E1095	118
T-E1097	116
T-E1098	177
T-E1102	116
T-E1102A	116
T-E1105	110MP
T-E1106	142A
T-E1108	507
T-E1114	118
T-E1116	109
T-E1118	177
T-E1119	177
T-E1121	177
T-E1122	156
T-E1124	116
T-E1127	156
T-E1133	116
T-E1138	116
T-E1140	142A
T-E1144	116
T-E1145	506
T-E1146	506
T-E1148	116
T-E1153	506
T-E1155	116
T-E1157	116
T-E1171	116
T-E1176	116
T-E1177	110MP
T-G1138	109
T-G5033	128
T-G5055	128
T-H1S557	116
T-H1S750	112
T-H2SC313	108
T-H2SC387	108
T-H2SC536	123AP
T-H2SC693	123AP
T-H2SC715	123AP
T-HS6105	116
T-HSG105	116
T-HU60U	106
T-Q5019	163A
T-Q5020	100
T-Q5021	160
T-Q5022	160
T-Q5023	102
T-Q5025	102
T-Q5026	102
T-Q5027	158
T-Q5028	104
T-Q5030	127
T-Q5031	103
T-Q5032	128
T-Q5034	160
T-Q5035	160
T-Q5036	104
T-Q5038	160
T-Q5039	103
T-Q5049	107
T-Q5050	103
T-Q5053	123AP
T-Q5053C	123AP
T-Q5055	108
T-Q5057	124
T-Q5063	128
T-Q5071	161
T-Q5073	123AP
T-Q5075	124
T-Q5077	159
T-Q5078	233
T-Q5079	107
T-Q5080	175
T-Q5081	128
T-Q5082	154
T-Q5083	164
T-Q5084	165
T-Q5086	161
T-Q5087	159
T-Q5093	199
T-Q5099	128
T-Q5104	124
T-Q5105	130
T-Q5106	107
T-Q7037	1004
T-Q7038	1004
T-R9S	139A
TA1Z	128
TA2A	123AP
TA2SA817	298
TA2T00733Q	290A
TA2T007330	290A
TA2T00952L	290A
TA3T006080	290A
TA3T0608K0	290A
TA3T0608KF	290A
TA3T016240	288
TA3T0984K0	290A
TA5T010154	290A
TA5T01054	290A
TA6	123AP
TA7	123AP
TA10E	5635
TA21R	5020A
TA50	116
TA70L9&	1101
TA78L	960
TA78L005	977
TA78L005AP	977
TA78L005AP-Y	977
TA78L005P	977
TA78L008P	981
TA78L012AP	950
TA78L18	1906
TA78L18A	1906
TA100	116
TA115	174
TA117	704
TA150PE	1130
TA200	116
TA231-400	5645
TA300	116
TA400	116
TA500	116
TA600	116
TA620-600	5466
TA622_400	5437
TA625-100	5462
TA625-200	5463
TA628-100	5437
TA630P	1576
TA1094	34
TA1222	5511
TA1225	5512
TA1575	102A
TA1575B	102A
TA1614	121
TA1620A	103
TA1620B	103
TA1628	160
TA1650A	160
TA1655B	102A
TA1658	160
TA1659	160
TA1660	160
TA1662	160
TA1682	121
TA1682A	121
TA1697	102A
TA1704	100
TA1705	121
TA1706	102A
TA1730	102A
TA1731	160
TA1755	160
TA1756	160
TA1757	160
TA1759	101
TA1763	100
TA1763A	100
TA1765	121
TA1766	121
TA1767	101
TA1771	101
TA1772	101
TA1773	121
TA1778	100
TA1782	100
TA1783	100
TA1794	121
TA1796	160
TA1797	160
TA1798	160
TA1828	160
TA1829	160
TA1830	160
TA1846	160
TA1847	160
TA1860	160
TA1861	160
TA1881	121
TA1890	121
TA1891	121
TA1928A	127
TA1990	160
TA2083	127
TA2124P	1128
TA2188	127
TA2301	121
TA2322	160
TA2401	108
TA2402	175
TA2402A	175
TA2442	5504
TA2444	5504
TA2494	71
TA2495	71
TA2503	108
TA2509	124
TA2509A	124
TA2554	161
TA2555	161
TA2577A	130
TA2644	222
TA2653	230
TA2654	230
TA2655	230
TA2672	121
TA2700	124
TA2710	278
TA2773	5513
TA2800	278
TA2819	191
TA2888	5455
TA2889	5455
TA2911	152
TA5274	711
TA5274(RCA)	711
TA5649	714
TA5649(RCA)	714
TA5649A	714
TA5814	712
TA5814(RCA)	712
TA6200	128
TA6220	708
TA6243	731
TA6243(RCA)	731
TA6319(RCA)	797
TA6405	738
TA6523	749
TA7006P	1149
TA7027M	726
TA7028M	704
TA7037M	726
TA7038M	704
TA7046P	1108
TA7047	904
TA7047M	904
TA7050M	711
TA7050P	1061
TA7054	1106
TA7054P	1106
TA7057M	905
TA7060	1104
TA7060AP	1104
TA7060P	1104
TA7060P-10	1104
TA7060PR	1104
TA7060PRW	1104
TA7060PW	1104
TA7061	1100
TA7061AP	1100
TA7061P	1100
TA7062P	1102
TA7063	1103
TA7063P	1103
TA7063P-B	1103
TA7063P-C	1103
TA7063P-D	1103
TA7063P-O	1103
TA7064P	1235
TA7064P-JA	1235
TA7066	1468
TA7066P	1468
TA7069	1101
TA7069(TRANS)	130
TA7069P	1101
TA7070	1004
TA7070P	1004
TA7070PFA1	1004
TA7070PFA-1	1004
TA7070PGL	1004
TA7071P	712
TA7072	748
TA7073	748
TA7074	749
TA7074P	749
TA7074PGL	749
TA7075	1080
TA7075P	1080
TA7075PL	1080
TA7082	1023
TA7082P	1023
TA7092	1107
TA7092C	1107
TA7092P	1107
TA7092P-A	1107
TA7092P-B	1107
TA7092P-C	1107
TA7092P-D	1107
TA7092P-H	1107
TA7103P	1062
TA7106P	1149
TA7117P	1022
TA7120	1087
TA7120B	1087
TA7120P	1087
TA7120P-C	1087
TA7120P-D	1087
TA7120P-E	1087
TA7120PB	1087
TA7120PC	1087
TA7122	1085
TA7122AP	1085
TA7122AP-D	1085
TA7122AR	1085
TA7122P-B	1085
TA7124P	1128
TA7124PFA-3	1128
TA7124PFA-4	1128
TA7130P	1234
TA7130P-B	1234
TA7130PB	1234
TA7130PC	1234
TA7137	1466
TA7137P	1466
TA7140	1468
TA7140P	1468
TA7150	1130
TA7150(FET)	221
TA7150P	1130
TA7151(FET)	221
TA7155(TRANS)	196
TA7156(TRANS)	152
TA7157	1206
TA7157P	1206
TA7159P	1243
TA7167	1200
TA7167P	1200
TA7176AP	1236
TA7176AP(FA-1)	1236
TA7176APAF-1	712
TA7176APFA1	712
TA7176APFA-1	1236
TA7176P	712
TA7176PFA-1	712
TA7189(FET)	222
TA7203	1154
TA7203P	1154
TA7205	1155
TA7205A	1155
TA7205AP	1155
TA7205P	1155
TA7208	1476
TA7208P	1476
TA7217	1370
TA7217AP	1370
TA7217P	1370
TA7220P	1087
TA7222	1278
TA7222AP	1278
TA7222P	1278
TA7226	1478
TA7226P	1478
TA7227	1394
TA7227P	1394
TA7229P	1372
TA7230	1387
TA7230P	1387
TA7262(RCA)	221
TA7270	1830
TA7270P	1830
TA7271	1831
TA7271P	1831
TA7274	1832
TA7274P	1832
TA7280	1898
TA7280P	1898
TA7281	1899
TA7281P	1899
TA7302P	1474
TA7303(TRANS)	108
TA7303P	1525
TA7310	1192
TA7310P	1192
TA7310P-U	1192
TA7310P-Y	1192
TA7311(TRANS)	182
TA7312(TRANS)	182
TA7312P	1523
TA7313	1465
TA7313(TRANS)	182
TA7313AP	1465
TA7313P	1465
TA7314(TRANS)	182
TA7314P	1521
TA7315(TRANS)	182
TA7316(TRANS)	182
TA7318(TRANS)	182
TA7318P	1498
TA7319(TRANS)	108
TA7325	1730
TA7325P	1730
TA7343	1657
TA7343AP	1657
TA7343P	1657
TA7347	1873
TA7347P	1873
TA7348	1826
TA7348P	1826
TA7358	1843
TA7358P	1843
TA7358S	928S
TA7361	1787
TA7361AP	1787
TA7361P	15005
TA7362(TRANS)	196
TA7363(TRANS)	152
TA7374(FET)	222
TA7399(FET)	222
TA7404(SCR)	5463
TA7405(SCR)	5465
TA7461(TRIAC)	5697
TA7462(TRIAC)	5697
TA7500(TRIAC)	5643
TA7501(TRIAC)	5643
TA7502(TRIAC)	5643
TA7502M	909
TA7503(TRIAC)	5643
TA7504	941S
TA7504M	941
TA7504P	941M
TA7504S	941S
TA7520(TRANS)	185
TA7535BP	928M
TA7539P	943M
TA7554(TRANS)	152
TA7555(TRANS)	152
TA7556	153
TA7557	153
TA7579	5643
TA7580	5643
TA7581	5643
TA7582	5643
TA7584	5697
TA7606AP	1545
TA7607	1545
TA7607AP	1545
TA7607BP	1545
TA7607P	1545
TA7608	1532
TA7608BP	1532
TA7608CP	1532
TA7608CP(FA-5)	1532
TA7608CP-GS-4	1532
TA7608CP-GS-5	1532
TA7608CPFA-5	1532
TA7608CPFA-6	1532
TA7608GS-4	1532
TA7608GS-5	1532
TA7608P	1532
TA7609	1496
TA7609D	1496
TA7609GS-2	1496
TA7609P	1496
TA7609P(FA-2)	1496
TA7609P-GS-2	1496
TA7609PFA-2	1496
TA7609PGS-2	1496
TA7609PGS-4	1532
TA7609PGS-5	1532
TA7611	1413
TA7611AP	1413
TA7611AP-S	1413
TA7612AP	1519
TA7612P	1519
TA7614	1654
TA7614AP	1654

PART NUMBER	NTE REPLACEMENT
TA7614P	1654
TA7630	1576
TA7630P	1576
TA7640	1842
TA7640A	1842
TA7640AP	1842
TA7640P	1842
TA7644	1547
TA7644AP	1547
TA7644BP	1547
TA7644BPFA-1	1547
TA7658	1571
TA7658P	1571
TA7660	15003
TA7660P	15003
TA7660P(FA-1)	15003
TA7660PFA-1	15003
TA7664PFA1	1674
TA7668	1651
TA7668AP	1651
TA7668P	1651
TA7669	222
TA7670	1671
TA7670P	1671
TA7671P	1236
TA7671PFA-1	1236
TA7673	1611
TA7673P	1611
TA7680	1572
TA7680AP	1572
TA7681	1570
TA7681AP	1570
TA7684	222
TA7741	187
TA7742	197
TA7743	197
TA7777	15035
TA7777N	1790
TA7777P	15035
TA7777P(FA-1)	15035
TA7782	196
TA7783	196
TA7784	196
TA7802	116
TA7803	116
TA7804	116
TA7805	125
TA7806	125
TA7996	116
TA8158	230
TA8159	230
TA8210	197
TA8211	197
TA8212	197
TA8231	196
TA8232	196
TA8233	196
TA8242	222
TA8680N	7010
TA11167	1682
TA31001	1648
TA31002	1649
TA70639	1052
TA75339	834
TA75339P	834
TA75358P	928M
TA75358S	928S
TA75393	943M
TA75393P	943M
TA75458P	778A
TA75557S	1529
TA75558P	778A
TA75558S	1529
TA75558S-1	928M
TA75559P	778A
TA75559P(FA-1)	778A
TA75559PFA-1	778A
TA75902	987
TA76448P	1547
TA76524	1720
TA78005AP	960
TA78005P	960
TA78008AP	964
TA78012AP	966
TA78012M	933
TA198030-4	123AP
TA198035-1	128
TA198036-2	159
TA198785-2	519
TA755585	1529
TA8532787	519
TA30016060	55
TA50013040	398
TA-1	105
TA-2	121
TA-3	105
TA-4	102A
TA-5	126
TA-6	123AP
TA-7	108
TA-1575	102A
TA-1575B	100
TA-1614	121
TA-1620A	103A
TA-1620B	103A
TA-1628	160
TA-1650A	126
TA-1655B	100
TA-1658	160
TA-1659	160
TA-1660	160
TA-1662	160
TA-1682	121
TA-1682A	121

PART NUMBER	NTE REPLACEMENT
TA-1697	102A
TA-1704	100
TA-1705	121
TA-1706	102A
TA-1730	102A
TA-1731	160
TA-1755	126
TA-1756	126
TA-1757	160
TA-1759	101
TA-1763	100
TA-1763A	100
TA-1765	121
TA-1766	121
TA-1767	101
TA-1771	101
TA-1772	101
TA-1773	121
TA-1778	100
TA-1782	100
TA-1783	100
TA-1794	121
TA-1796	160
TA-1797	160
TA-1798	160
TA-1828	160
TA-1829	160
TA-1830	126
TA-1846	160
TA-1847	160
TA-1860	160
TA-1861	160
TA-1881	121
TA-1890	121
TA-1891	121
TA-4846	160
TA-7027M	726
TA-7050M	711
TA-7060P	1104
TA-7061AP	1100
TA-7061B	1100
TA-7061P	1100
TA-7062P	1102
TA-7063	1103
TA-7063P	1103
TA-7069P	1101
TA-7155	196
TA-7205P	1155
TAA320	133
TAA380	704
TAA521	909
TAA521/709	909
TAA521A	909D
TAA521A/709C	909D
TAA522	909
TAA522/709	909
TAA621	1112
TAA621A12	1112
TAC047	123AP
TAC-047	123AP
TAD	5655
TAG	5655
TAG60A(AGK)	5401
TAG60F(AGK)	5401
TAG60Y(AGK)	5400
TAG62A	5402
TAG62F	5401
TAG62Y	5400
TAG86-B	5603
TAG96-A	5602
TAG96-D	5605
TAG96-E	5606
TAG96-M	5607
TAG200-100	5640
TAG200-200	5641
TAG200-400	5642
TAG200-600	5643
TAG201-100	5650
TAG201-200	5651
TAG201-400	5652
TAG201-600	5653
TAG222-400	5608
TAG222-600	5609
TAG222-800	5610
TAG224-200	56004
TAG224-600	56008
TAG230-100	5645
TAG230-200	5645
TAG230-400	5645
TAG230-600	5645
TAG231-100	5645
TAG231-200	5645
TAG231-600	5645
TAG250-200	56004
TAG250-400	56006
TAG250-600	56008
TAG250A200	56004
TAG250A-400	56006
TAG250A-600	56008
TAG251-200	56004
TAG251-400	56006
TAG251-600	56008
TAG255-200	56004
TAG255-400	56006
TAG255-600	56008
TAG256-200	56004
TAG256-400	56006
TAG256-600	56008
TAG280-200	56004
TAG280-400	56006
TAG280-600	56008
TAG280-800	56010
TAG605-100	5427
TAG605-200	5427

PART NUMBER	NTE REPLACEMENT
TAG605-400	5428
TAG605-600	5429
TAG620-100	5462
TAG620-200	5463
TAG620-400	5465
TAG622-100	5437
TAG622-200	5437
TAG622-400	5437
TAG622-600	5438
TAG623-100	5437
TAG623-200	5437
TAG623-400	5437
TAG623-600	5438
TAG625-400	5465
TAG625-600	5466
TAG625-800	5468
TAG627-100	5437
TAG627-200	5437
TAG627-400	5437
TAG627-600	5438
TAG628-200	5437
TAG628-400	5437
TAG628-600	5438
TAG630-100	5462
TAG630-200	5463
TAG630-400	5465
TAG630-600	5466
TAG630-800	5468
TAG632-100	5437
TAG632-200	5437
TAG632-400	5437
TAG632-600	5438
TAG633-100	5437
TAG633-200	5437
TAG633-400	5437
TAG633-600	5437
TAG670-100	5462
TAG670-200	5463
TAG670-400	5465
TAG670-600	5466
TAG670-800	5468
TAG675-100	5552
TAG675-200	5552
TAG675-400	5554
TAG675-600	5556
TAG675-800	5558
TAG825-200	5534
TAG825-400	5534
TAG825-600	5534
TAG826-200	5534
TAG826-400	5534
TAG826-600	5534
TAG-510B	5414
TAG-510D	5415
TAG-510E	5416
TAG-510M	5416
TAG-511B	5414
TAG-511D	5415
TAG-511E	5416
TAG-511M	5416
TAG-512B	5414
TAG-512D	5415
TAG-512E	5416
TAG-512M	5416
TAH	5655
TAIT00101P	290A
TALT007330	290A
TALT00952L	290A
TALT009520	290A
TASCA3137	1176
TAT-12	128
TB3G0632KE	185
TB3G01134R	153
TB3T006980	290A
TB3T009260	12
TB4.1	116
TB4B	5332
TB4H	5332
TB5	5800
TB5-1	5332
TB6.B	5332
TB100	5802
TB151-500R	5466
TB200	5802
TB200546AL	398
TB3000632	185
TB3000632E	185
TB3001134R	153
TB30006320	185
TBA105-H	1115A
TBA120AS	1292
TBA120S	1292
TBA120S-4	1292
TBA120S-5	1292
TBA120SD	1292
TBA120U	1580
TBA120UN	1580
TBA221	941
TBA221/741C	941
TBA221A	941D
TBA221A/741C	941D
TBA222	941
TBA222/741	941
TBA231	725
TBA281	923
TBA281/723	923
TBA281/723C	923
TBA800	1116
TBA810	1115
TBA810AS	1115
TBA810DS	1115
TBA810S	1115
TBA810S-H	1115A
TBA810SH	1115A

PART NUMBER	NTE REPLACEMENT
TBA820	1117
TBA820L	1117
TBA820M	1294
TBA820MT	1294
TBA2800	1764
TBA-800	1116
TBA-820	1117
TBD	5655
TBG	5655
TBH	5655
TBP18S030N	74S288
TBRC147B	123AP
TC0.09M22/1	5804
TC0.1P	506
TC0.2P11/2	116
TC0.2P11/12	507
TC0P11/2	116
TC02P12	116
TC02P112	116
TC0914	108
TC0918	108
TC1T013170	289A
TC2T009450	85
TC3F035030	157
TC3F017560	376
TC3F042170	157
TC3Q040750	376
TC3Q026210	157
TC3R022710	399
TC3T030000	85
TC3T005360	85
TC3T0536K0	85
TC3T0536KF	85
TC3T0536S0	85
TC3T0536S0	85
TC3T022710	399
TC3T022740	289A
TC3T023620	199
TC3T034680	399
TC3T2362K0	199
TC5T021204	289A
TC5T0388A0	85
TC5T018154	85
TC5T022294	399
TC10LB2	5455
TC27A5A	146A
TC27A5A-5	146A
TC33A5A	147A
TC50	5800
TC62A5B	149A
TC82A5B	150A
TC100	5802
TC106A1	5454
TC106A2	5454
TC106A3	5454
TC106A4	5454
TC106B1	5455
TC106B3	5455
TC106B4	5455
TC106C1	5456
TC106C2	5456
TC106C3	5456
TC106C4	5456
TC106D1	5457
TC106D2	5457
TC106D3	5457
TC106D4	5457
TC106F1	5453
TC106F2	5453
TC106F3	5453
TC106F4	5453
TC106Q1	5452
TC106Q2	5452
TC106Q3	5452
TC106Q4	5452
TC106Y1	5452
TC106Y2	5452
TC106Y3	5452
TC106Y4	5452
TC110A5B	151A
TC136	116
TC200	5802
TC2369A	108
TC2483	108
TC2484	108
TC3001	1192
TC4000BP	4000
TC4001B	4001B
TC4001BP	4001B
TC4001P	4001B
TC4001UB	4001B
TC4001UBP	4001B
TC4002B	4002B
TC4002BP	4002B
TC4002P	4002B
TC4006BP	4006B
TC4007UB	4007
TC4008B	4008B
TC4008BP	4008B
TC4011	4011B
TC4011B	4011B
TC4011BP	4011B
TC4011P	4011B
TC4011UB	4011B
TC4011UBP	4011B
TC4012B	4012B
TC4012BP	4012B
TC4013	4013B
TC4013B	4013B
TC4013BP	4013B
TC4013P	4013B
TC4014B	4014B
TC4015B	4015B
TC4015BP	4015B

PART NUMBER	NTE REPLACEMENT
TC4015P	4015B
TC4016B	4016B
TC4016BP	4016B
TC4017B	4017B
TC4017BP	4017B
TC4017P	4017B
TC4018B	4018B
TC4018BP	4018B
TC4019BP	4019B
TC4019P	4019B
TC4020B	4020B
TC4020BP	4020B
TC4021B	4021B
TC4021P	4021B
TC4022B	4022B
TC4022BP	4022B
TC4023B	4023B
TC4023BP	4023B
TC4023P	4023B
TC4024B	4024B
TC4024BP	4024B
TC4025	4025B
TC4025B	4025B
TC4025BP	4025B
TC4025P	4025B
TC4027	4027B
TC4027B	4027B
TC4027B9-1	4027B
TC4027BP	4027B
TC4027P	4027B
TC4028B	4028B
TC4028BP	4028B
TC4028P	4028B
TC4029B	4029B
TC4029BP	4029B
TC4030BP	4030B
TC4030P	4030B
TC4032B	4032B
TC4032BP	4032B
TC4035B	4035B
TC4038B	4038B
TC4038BP	4038B
TC4040B	4040B
TC4040BP	4040B
TC4040P	4040B
TC4042B	4042B
TC4042BP	4042B
TC4042P	4042B
TC4043B	4043B
TC4043BP	4043B
TC4044B	4044B
TC4044BP	4044B
TC4047B	4047B
TC4049	4049
TC4049BP	4049
TC4050B	4050B
TC4050BP	4050B
TC4050P	4050B
TC4051B	4051B
TC4051BP	4051B
TC4052	4052B
TC4052B	4052B
TC4052BP	4052B
TC4052BP-1	4052B
TC4053B	4053B
TC4053BP	4053B
TC4055B	4055B
TC4055BP	4055B
TC4056B	4056B
TC4056BC	4056B
TC4056BP	4056B
TC4063B	4063B
TC4063BP	4063B
TC4066	4066B
TC4066B	4066B
TC4066BC	4066B
TC4066BP	4066B
TC4066P	4066B
TC4068B	4068B
TC4068BP	4068B
TC4069	4069
TC4069B	4069
TC4069BP	4069
TC4069P	4069
TC4069UB	4069
TC4069UBP	4069
TC4069UPN	4069
TC4071B	4071B
TC4071BP	4071B
TC4072B	4072B
TC4072BP	4072B
TC4073	4073B
TC4073BP	4073B
TC4075BP	4075B
TC4076B	4076B
TC4078B	4078B
TC4081	4081B
TC4081B	4081B
TC4081BP	4081B
TC4082B	4082B
TC4082BP	4082B
TC4085B	4085B
TC4085BP	4085B
TC4086B	4086B
TC4086BP	4086B
TC4093B	4093B
TC4093BP	4093B
TC4094B	4094B
TC4094BC	4094B
TC4094BP	4094B
TC4099B	4099B
TC4099BP	4099B
TC4099P	4099B
TC4508BP	4508B

PART NUMBER	NTE REPLACEMENT
TC4510B	4510B
TC4510BP	4510B
TC4511B	4511B
TC4512B	4512B
TC4512P	4512B
TC4514B	4514B
TC4514BP	4514B
TC4514BP-1	4514B
TC4515B	4515B
TC4516B	4516B
TC4516BP	4516B
TC4518B	4518B
TC4518BP	4518B
TC4520B	4520B
TC4520BP	4520B
TC4522BP	4522B
TC4527BP	4527B
TC4527P	4527B
TC4528	4528B
TC4528B	4528B
TC4528BP	4528B
TC4531B	4531B
TC4531BP	4531B
TC4538	4538B
TC4538B	4538B
TC4538BP	4538B
TC4539B	4539B
TC4539BP	4539B
TC4539P	4539B
TC4543B	4543B
TC4556BP	4556B
TC4556P	4556B
TC4584BP	4016B
TC4585B	4585B
TC5012BP	4503B
TC5082	1197
TC5082P	1197
TC5082P-L	1197
TC5501	65101
TC5501D	65101
TC5501D/-1	65101
TC5501P	65101
TC5501P/-1	65101
TC7400BP	7400
TC7476BP	7476
TC9100C	1167
TC9100P	1167
TC40116BP	4016B
TC40160BP	40160B
TC40161BP	40161B
TC40162B	40162B
TC40162BP	40162B
TC40163B	40163B
TC40163BP	40163B
TC40174B	40174B
TC40174BP	40174B
TC40175B	40175B
TC40193BP	40193B
TC500388A0	85
TC3002271D	399
TC3002344E	375
TC3002621E	157
TC5001815	85
TC10013170	289A
TC20009450	85
TC20019410	399
TC30005360	85
TC30022710	399
TC30024560	157
TC30031560	238
TC30041590	54
TC50032960	375
TC311200600	109
TC312307222	123AP
TC3112006000	109
TC3112319300	116
TC3123036722	123AP
TC3123036900	123AP
TC3123037111	123AP
TC3123037222	123AP
TC3123037412	123AP
TC3123041557	102A
TC-0.09M21/3	113A
TC-0.2	506
TC-0.2P11/1	506
TC-0-2P11/1	506
TC-0918	108
TC-6(ELCOM)	703
TC-136	116
TC-4066BP	4066B
TCA830S	1115A
TCD	5656
TCG	5656
TCG346	311
TCG524	524V15
TCG703	703
TCH	5656
TCH98	159
TCH99	159
TCH99B	159
TCI00501P	85
TCIT00501P	85
TCL0009450	85
TCLT009450	85
TCM5089A	1690
TC0.09M22/1	166
TCR3	5481
TCR8	5481
TCR38	5484
TCR48	5485
TCR50	5481
TCR51	5482
TCR52	5483
TCR53	5483

PART NUMBER	NTE REPLACEMENT
TCR54	5484
TCR55	5484
TCR56	5485
TCR70	5481
TCR71	5482
TCR72	5483
TCR74	5484
TCR75	5484
TCR505	5481
TCR510	5481
TCR730	5481
TCR731	5482
TCR732	5483
TCR733	5484
TCR734	5485
TCR742	5481
TCR743	5482
TCR744	5483
TCR745	5483
TCR746	5484
TCR747	5484
TCR748	5485
TCR1010	5482
TCR1510	5483
TCR2010	5483
TCR2505	5484
TCR2510	5484
TCR3005	5484
TCR3010	5484
TCR3505	5485
TCR3510	5485
TCR4005	5485
TCR4010	5485
TCS100	192
TCS101	193
TCS102	192
TCS103	193
TCSEU2V	552
TCT009450	85
TCT3T0536K0	85
TD2SC2334	54
TD3F013970	2302
TD3F013980	2302
TD3F400	308
TD3F400H	310
TD3F400R	308
TD3F500	308
TD3F500H	310
TD3F500R	308
TD3F600H	310
TD3F600R	308
TD3F700	308
TD3F700H	310
TD3F700R	308
TD3F800	308
TD3F800H	310
TD3F800R	308
TD3G0612KE	184
TD3T007340	85
TD3T00863E	382
TD4G	5332
TD5	5410
TD5.B	5332
TD5.F	5332
TD5.G	5332
TD5.K	5332
TD5.L	5332
TD5F01550	2302
TD5F014260	2302
TD5F014270	2302
TD5F015550	2331
TD5G015540	2302
TD5Q015460	2300
TD5Q015470	2300
TD5Q015560	2302
TD6.B	5332
TD6.C	5332
TD6F	5332
TD8.1	5332
TD8.A	5332
TD8.B	5332
TD8.C	5332
TD8.K	5332
TD9.C	5332
TD13	551
TD15	551
TD15H	551
TD15M	506
TD28	5646
TD32N400CO	5711
TD32N400KOC	5711
TD32N600CO	5711
TD32N600KOC	5711
TD32N800CO	5711
TD32N800KOC	5711
TD32N1100CO	5711
TD32N1100KOC	5711
TD32N1200CO	5711
TD32N1200KOC	5711
TD45N400CO	5711
TD45N400KOC	5711
TD45N600CO	5711
TD45N600KOC	5711
TD45N800CO	5711
TD45N800KOC	5711
TD45N1100CO	5711
TD45N1100KOC	5711
TD45N1200CO	5711
TD45N1200KOC	5711
TD48	5646
TD58	5646
TD60N400CO	5711
TD60N400KOC	5711
TD60N600CO	5711

PART NUMBER	NTE REPLACEMENT
TD60N600KOC	5711
TD60N800CO	5711
TD60N800KOC	5711
TD60N1100CO	5711
TD60N1100KOC	5711
TD60N1200CO	5711
TD60N1200KOC	5711
TD68	5646
TD75N400CO	5721
TD75N400KOC	5721
TD75N600CO	5721
TD75N600KOC	5721
TD75N800CO	5721
TD75N800KOC	5721
TD75N1100CO	5721
TD75N1100KOC	5721
TD75N1200CO	5721
TD75N1200KOC	5721
TD95N400CO	5721
TD95N400KOC	5721
TD95N600CO	5721
TD95N600KOC	5721
TD95N800CO	5721
TD95N800KOC	5721
TD95N1100CO	5721
TD95N1100KOC	5721
TD95N1200CO	5721
TD95N1200KOC	5721
TD100	81
TD101	81
TD102	81
TD200	123AP
TD210	5646
TD250	123AP
TD400	82
TD401	82
TD410	5646
TD503	5408
TD510	5646
TD610	5646
TD1060	9930
TD1060P	9930
TD1061	9935
TD1061P	9935
TD1062	9932
TD1062P	9932
TD1063	9933
TD1063P	9933
TD1064	9944
TD1064P	9944
TD1065	9946
TD1065P	9946
TD1066	9962
TD1066P	9962
TD1067	9948
TD1067P	9948
TD1070	9945
TD1070P	9945
TD1072	9936
TD1072P	9936
TD1073	9093
TD1073P	9093
TD1074	9099
TD1074P	9099
TD1080	9961
TD1080P	9961
TD1085	9949
TD1085P	9949
TD1086	9963
TD1086P	9963
TD1401	7400
TD1401P	7400
TD1402	7410
TD1402P	7410
TD1403	7420
TD1403P	7420
TD1404	7430
TD1404P	7430
TD1405	7440
TD1405P	7440
TD1406	7450
TD1406P	7450
TD1407	7460
TD1407P	7460
TD1408	7472
TD1408P	7472
TD1409	7473
TD1409P	7473
TD1419	7451
TD1419P	7451
TD2002P	9670
TD2003P	9668
TD2004P	9664
TD2006P	9669
TD2008P	9660
TD2009P	9671
TD2218	81
TD2218A	81
TD2219	81
TD2219A	81
TD2904	82
TD2904A	82
TD2905	82
TD2905A	82
TD3400A	7400
TD3400AP	7400
TD3400P	7400
TD3401A	7401
TD3401AP	7401
TD3402A	7402
TD3402AP	7402
TD3404A	7404
TD3404AP	7404
TD3405A	7405
TD3405AP	7405
TD3409A	7409
TD3409AP	7409
TD3410A	7410
TD3410AP	7410
TD3410P	7410
TD3420A	7420
TD3420AP	7420
TD3420P	7420
TD3430A	7430
TD3430AP	7430
TD3430P	7430
TD3440A	7440
TD3440AP	7440
TD3440P	7440
TD3441A	7441
TD3441AP	7441
TD3442A	7442
TD3442AP	7442
TD3447A	7447
TD3447AP	7447
TD3450A	7450
TD3450AP	7450
TD3450P	7450
TD3451A	7451
TD3451AP	7451
TD3451P	7451
TD3460A	7460
TD3460AP	7460
TD3460P	7460
TD3472A	7472
TD3472AP	7472
TD3473A	7473
TD3473AP	7473
TD3474A	7474
TD3474AP	7474
TD3474P	7474
TD3475A	7475
TD3475AP	7475
TD3480A	7480
TD3480AP	7480
TD3482P	7482
TD3483P	7483
TD3490A	7490
TD3490AP	7490
TD3490P	7490
TD3491A	7491
TD3491AP	7491
TD3492A	7492
TD3492AP	7492
TD3492P	7492
TD3493A	7493A
TD3493AP	7493A
TD3493BP	7493A
TD3493P	7493A
TD3495A	7495
TD3495AP	7495
TD3503A	74164
TD3503AP	74164
TD5051	385
TD6350	1677
TD6350P	1677
TD34121A	74121
TD34121AP	74121
TD34192A	74192
TD34192AP	74192
TD62001	2011
TD62001P	2011
TD62002	2012
TD62002P	2012
TD62003	2013
TD62003P	2013
TD62004	2014
TD62004P	2014
TD62005	2015
TD62005P	2015
TD62006	2083
TD62306	2083
TD81518	177
TD200401A0	375
TD200401AL	375
TD200401AO	375
TD501052A0	56
TD960016-1M	177
TD20004710	293
TD20008820	184
TD30006120	184
TD30016660	377
TD50014260	2302
TD-13	551
TD-15	551
TD-15-BL	177
TD-15H	551
TDA723	923D
TDA1013	1852
TDA1013AU	1852
TDA1013B	1852
TDA1013BU	1852
TDA1060A	1672
TDA1083	1624
TDA1170	1289
TDA1170N	1289
TDA1170S	1289
TDA1180	1784
TDA1190P	1231A
TDA1190Z	1231
TDA1200	788
TDA1330P	747
TDA1352P	749
TDA1515	1851
TDA1515A	1851
TDA1515AU	1851
TDA1524A	1803
TDA1541	2057
TDA1541AN	2057
TDA1905	7000
TDA2002	1232
TDA2002V	1232
TDA2003	1288
TDA2003V	1288
TDA2004	1396
TDA2005	1396
TDA2006	1378
TDA2008	1374
TDA2030	1380
TDA2030H	1380
TDA2030V	1380
TDA2040	1376
TDA2040V	1376
TDA2540	1413
TDA2540DP	1413
TDA2540Q	1413
TDA2541	1785
TDA2541DP	1545
TDA2541Q	1545
TDA2544	1545
TDA2546	1752
TDA2546A	1752
TDA2577	1632
TDA2577A	1632
TDA2577AS2	1632
TDA2593	7001
TDA2593N	7001
TDA2611	1566
TDA2611A	1566
TDA2653	1804
TDA2653A	1804
TDA2653AU	1804
TDA3047	1761
TDA3047P	1761
TDA3048	1762
TDA3048P	1762
TDA3081B	916
TDA3081N	916
TDA3190	1231A
TDA3190P	1231A
TDA3410	1577
TDA3563	1567
TDA3564	1890
TDA3564N	1890
TDA3570	1416
TDA3651	1567
TDA3651A	1567
TDA3651AAQ	1567
TDA3651AQ	1567
TDA3651AQU	1567
TDA3653	1567
TDA3653CQU	1567
TDA3654	1754
TDA3654AQ	1754
TDA3654U	1754
TDA4190	1633
TDA4601	7002
TDA8172	1788
TDA8174	1858
TDA-2541	1440
TDB0117	970
TDB0124	987
TDB0124DP	987
TDB0193DP	943M
TDB0555DP	955M
TDB0565-DP	989
TDB0723A	923D
TDB2912SP	967
TDB7812	933
TDD	5656
TDF014270	2302
TDG	5656
TDH	5656
TE367	218
TE500	312
TE697	123AP
TE706	108
TE1010	116
TE1011	116
TE1014	109
TE1024	116
TE1024C	116
TE1024D	116
TE1029	116
TE1031	109
TE1042	116
TE1050	116
TE1061	113A
TE1061A	113A
TE1064	125
TE1068	142A
TE1077	142A
TE1078	116
TE1080	116
TE1086	113A
TE1088	116
TE1089	116
TE1090	116
TE1095	118
TE1097	116
TE1098	109
TE1105	109
TE1108	116
TE1114	118
TE1420	123AP
TE1990	128
TE2252	261
TE2369	123AP
TE2484	108
TE2711	199
TE2712	199
TE2713	172A
TE2714	172A
TE2715	108
TE2716	108
TE2921	199
TE2922	199
TE2923	199
TE2924	199
TE2925	199
TE2926	199
TE3390	199
TE3391	199
TE3391A	199
TE3392	199
TE3393	199
TE3394	199
TE3395	199
TE3396	199
TE3397	199
TE3398	199
TE3414	123AP
TE3415	123AP
TE3416	128
TE3417	192
TE3605	123AP
TE3605A	123AP
TE3606	123AP
TE3606A	123AP
TE3607	123AP
TE3702	193
TE3703	193
TE3704	123AP
TE3705	123AP
TE3707	108
TE3708	108
TE3709	108
TE3710	108
TE3711	108
TE3843	199
TE3844	199
TE3845	199
TE3854	199
TE3854A	199
TE3855	199
TE3855A	199
TE3859	199
TE3859A	192
TE3860	199
TE3900	199
TE3900A	199
TE3901	199
TE3903	123AP
TE3904	123AP
TE3905	159
TE3906	123AP
TE4123	123AP
TE4124	123AP
TE4125	159
TE4126	159
TE4256	199
TE4424	123AP
TE4425	192
TE4951	123AP
TE4952	123AP
TE4953	123AP
TE4954	123AP
TE5086	193
TE5087	193
TE5088	193
TE5089	193
TE5249	193
TE5309	193
TE5309A	123AP
TE5310	199
TE5311	199
TE5311A	123AP
TE5365	159
TE5366	159
TE5367	193
TE5368	123AP
TE5369	123AP
TE5370	123AP
TE5371	123AP
TE5376	123AP
TE5377	123AP
TE5378	159
TE5379	159
TE5447	159
TE5448	159
TE5449	123AP
TE5450	123AP
TE5451	123AP
TE-500-E	132
TE-1011	116
TE-1014	109
TE-1029	177
TE-1031	109
TE-1050	116
TE-1061A	113A
TEA2037	1888
TEA2037A	1888
TED	5657
TEG	5657
TEG0129	161
TEH	5657
TEH0143	154
TEH0147	123AP
TEO2138	2300
TEST1	125
TEST2	125
TF5QS6565	5424
TF7	124
TF20	116
TF21	177
TF22	116
TF23	116
TF30	102A
TF320M-AZ	5465
TF34	177
TF44	177
TF44J	177
TF49	102A
TF50S6344G	5424
TF65	102A
TF65/30	102A
TF65/M	102A
TF65/S/30	102A
TF65M	158
TF66	102A
TF66/30	102A
TF66/60	102A
TF70	101
TF71	101
TF72	101
TF75	102A
TF77	102A
TF78	104
TF78/30	104
TF78/30Z	121
TF78/60	121
TF80/30	121
TF80/30Z	121
TF80/302	102A
TF101	552
TF101-A	128
TF101-B	128
TF101-D	128
TF102	552
TF103	552
TF104	552
TF105	552
TF151	580
TF152	580
TF153	580
TF154	580
TF155	580
TF301	580
TF302	580
TF303	580
TF304	580
TF305	580
TF306	577
TF307	577
TF320MA	5465
TF-30	102A
TF-65	102A
TF-66	102A
TF-78	123AP
TF-80/30	121
TFD	5655
TFG	5655
TFH	5655
TFH340MFLC6	5465
TFR105	125
TFR110	125
TFR120	116
TFR140	125
TFR-120	116
TFS340M	5424
TFS340MX	5424
TG2SA201	126
TG2SA201(C)	160
TG2SA201-0	126
TG2SA201-N	126
TG2SA201C	126
TG2SA608	290A
TG2SA608-D	159
TG2SA608-E	159
TG2SA608C	159
TG2SA608E	159
TG2SA608F	290A
TG2SA608K	290A
TG2SA608NP	290A
TG2SA608NPF	290A
TG2SA608NPG	290A
TG2SA608SP	290A
TG2SA608SPF	290A
TG2SA953	290A
TG2SA984	290A
TG2SA984E	290A
TG2SA984K	290A
TG2SA984KE	290A
TG2SA1016	234
TG2SA1345	2360
TG2SA1346	2358
TG2SB511-1	153
TG2SB511-E	153
TG2SB511-E-1	153
TG2SB544E	294
TG2SB560E	383
TG2SB598	159
TG2SB698	290A
TG2SB698F	290A
TG2SB764	383
TG2SC	399
TG2SC65	154
TG2SC65(Y)	128
TG2SC65Y	154
TG2SC536	85
TG2SC536(C)	199
TG2SC536(E)	199
TG2SC536-D-A	199
TG2SC536-D-B	199
TG2SC536-E	199
TG2SC536-E-A	199
TG2SC536-E-B	199
TG2SC536-E-F	199
TG2SC536-F	199
TG2SC536-F-A	199
TG2SC536C	199
TG2SC536E	85
TG2SC536F	85
TG2SC536KN	85
TG2SC536NP	85
TG2SC536NPF	85
TG2SC536SP	85
TG2SC536SPF	85
TG2SC927	161
TG2SC927(C)	161
TG2SC927-C-A	319P
TG2SC927-D-A	319P
TG2SC927-E-A	319P
TG2SC927A	107
TG2SC927C	107
TG2SC983-0	287
TG2SC983-Y	287
TG2SC983R	287
TG2SC1025	175
TG2SC1025(D)	124
TG2SC1025D	175
TG2SC1046N-A	165
TG2SC1175	123AP
TG2SC1175(C)	123AP
TG2SC1175-	123AP
TG2SC1175-C	123A
TG2SC1175-D	123AP
TG2SC1175-E	123AP
TG2SC1175C	128
TG2SC1293	233
TG2SC1293(A)	233
TG2SC1293-	233
TG2SC1293-A-A	233
TG2SC1293-B-A	233
TG2SC1293-C-A	233
TG2SC1293-D-A	233
TG2SC1293A	233
TG2SC1295	165
TG2SC1295(0)	165
TG2SC1295-0	165
TG2SC1295-0-A	165
TG2SC1686	85
TG2SC1755	376
TG2SC1756-	198
TG2SC1756-C	198
TG2SC1756-D	198
TG2SC1756-D-R	198
TG2SC1756-E	198
TG2SC1756K	376
TG2SC1956	198
TG2SC2057-C	319P
TG2SC2057-D	229
TG2SC2057C	319P
TG2SC2271	399
TG2SC2274	289A
TG2SC2274.289A	85
TG2SC2274E	289A
TG2SC2274F	289A
TG2SC2278	287
TG2SC2999	107
TG2SC3399	2359
TG2SC3400	2357
TG2SC3402	2355
TG2SD24	124
TG2SD24(Y)	124
TG2SD24Y	124
TG2SD313	152
TG2SD313E	152
TG2SD325-1	152
TG2SD325-E	152
TG2SD325-E-1	152
TG2SD386	375
TG2SD386-E	375
TG2SD386-E-F	375
TG2SD386-F	375
TG2SD386E	375
TG2SD386Y	375
TG2SD386Y-D-A	375
TG2SD386Y-E-A	375
TG2SD400E	293
TG2SD438E	382
TG2SD545	293
TG2SD612-E	184
TG2SD612-E-F	184
TG2SD612-F	184
TG2SD612E	295
TG2SD613D	377
TG2SD613E	377
TG2SD627	389
TG2SD734	85
TG2SD894	253
TG4.C	5332
TG11	176
TG12	116
TG20A	116
TG21	116
TG22	116
TG31	116
TG32	116
TG41	116
TG42	116
TG48	158
TG51	116
TG52	116
TG61	116
TG62	116
TG284	6241
TG286	6241
TG-2SC2271	287
TG-11	116
TG-12	116
TG-21	116
TG-22	116
TG-28	109
TG-31	116
TG-32	116
TG-41	116
TG-42	116
TG-48	109
TG-51	116
TG-52	116
TG-61	116
TG-62	116
TGB0331	123AP
TGZSA608(C)	106
TH1S557	116
TH2SC535	107
TH2SC536	123AP
TH2SC693	123AP
TH2SC715	123AP
TH50	116
TH400	116
TH600	116
TH800	125
TH801	116
TH802	116
TH803	116
TH804	116
TH805	116
TH806	116
TH808	125
TH810	125
TH1000	125
TH7251	196
TH-1S750	112
TH-H2SC313	161
THSG105	116
THSHZ7B2	5014A
THU60U	102A
THV15	542
THV315	542
THVP12	548
TI031	177
TI1A6	123AP
TI24A	123AP
TI24B	123AP
TI25A	108
TI25B	108
TI40A0	5481
TI40A1	5482
TI40A2	5483
TI40A3	5484
TI40A4	5485
TI42	6407
TI42A	6408
TI43A	6408
TI51	177
TI52	116
TI53	116
TI54	116
TI54A	123AP
TI54B	123AP
TI54C	123AP
TI54D	199
TI54E	123AP
TI55	116
TI56	116
TI57	116
TI58	116
TI59	116
TI60	116
TI71	116
TI136	5483
TI137	5484
TI138	5485
TI152	116
TI266A	121
TI269	121
TI338	160
TI363	160
TI364	160
TI365	160
TI366	121
TI366A	121
TI367	121
TI367A	121
TI368	121
TI368A	121
TI369	121
TI369A	121
TI370	104
TI370A	104
TI387	160
TI388	160
TI389	160
TI390	160
TI391	160
TI393	160
TI395	160
TI396	160
TI397	160
TI398	160
TI399	160
TI400	160
TI401	160
TI402	160
TI403	160
TI407	108
TI408	108
TI409	108
TI410	108
TI411	123AP
TI415	123AP
TI416	123AP
TI417	123AP
TI418	123AP
TI419	123AP

PART NUMBER	NTE REPLACEMENT
TI420	123AP
TI422	123AP
TI424	123AP
TI430	123AP
TI431	108
TI432	123AP
TI480	123AP
TI480E	506
TI481	123AP
TI482	123AP
TI483	123AP
TI484	128
TI485	123AP
TI486	152
TI487	152
TI492	123AP
TI493	123AP
TI494	123AP
TI495	123AP
TI496	123AP
TI503	159
TI642B	123AP
TI714	123AP
TI722	171
TI741	132
TI743	159
TI744	159
TI751	123AP
TI752	159
TI802B	123AP
TI803B	123AP
TI808E	129
TI810B	123AP
TI811G	128
TI904	123AP
TI907	123AP
TI908	123AP
TI3010	160
TI3011	160
TI3012	121
TI3015	128
TI3016	108
TI3027	121
TI3028	121
TI3029	121
TI8003B	123AP
TI64213	128
TI-1A6	131
TI-7A	131
TI-51	177
TI-53	116
TI-55	116
TI-56	5800
TI-71	116
TI-92	199
TI-266A	121
TI-269	121
TI-338	160
TI-363	100
TI-364	100
TI-365A	166
TI-366	121
TI-366A	121
TI-367	121
TI-367A	121
TI-368	121
TI-368A	121
TI-369	121
TI-369A	121
TI-370	121
TI-370A	121
TI-387	160
TI-388	160
TI-389	160
TI-400	160
TI-401	160
TI-403	160
TI-407	161
TI-408	161
TI-409	161
TI-410	108
TI-412	123AP
TI-413	123AP
TI-414	123AP
TI-415	199
TI-416	199
TI-417	108
TI-418	199
TI-419	199
TI-420	108
TI-421	199
TI-422	123AP
TI-423	123AP
TI-424	128
TI-425	128
TI-428	159
TI-429	159
TI-430	108
TI-431	108
TI-432	123AP
TI-433	123AP
TI-474	108
TI-475	128
TI-480	128
TI-481	123AP
TI-482	128
TI-483	128
TI-484	128
TI-485	192
TI-486	198
TI-490	108
TI-492	161
TI-493	161
TI-494	161
TI-495	108
TI-496	128
TI-503	159
TI-714	123AP
TI-714A	123AP
TI-722	154
TI-741	132
TI-743	159
TI-744	159
TI-751	123AP
TI-752	159
TI-806G	123AP
TI-890	159
TI-891	193
TI-905	159
TI-906	159
TI-907	123AP
TI-908	123AP
TI-3016	107
TI-3029	121
TI-3030	179
TI-3031	179
TI-UG-1888	177
TI-UG1888	177
TIA01	102A
TIA02	160
TIA03	100
TIA04	102
TIA05	100
TIA05A	100
TIA06	123AP
TIA35	176
TIA102	123AP
TIA-01	102A
TIC44	5400
TIC45	5401
TIC46	5402
TIC47	5404
TIC54	6407
TIC56	6407
TIC106A	5454
TIC106B	5455
TIC106C	5456
TIC106D	5437
TIC106F	5453
TIC106Y	5452
TIC116A	5462
TIC116B	5463
TIC116D	5465
TIC116F	5461
TIC206A	5608
TIC206B	5608
TIC206D	5608
TIC216A	5608
TIC216B	5608
TIC216D	5608
TIC222B	5673
TIC222D	5675
TIC222E	5676
TIC225D	5608
TIC225M	5609
TIC225N	5610
TIC226A	5632
TIC226B	5633
TIC226C	5634
TIC226D	5635
TIC226E	5636
TIC226M	5637
TIC232B	5673
TIC232D	5675
TIC232E	5676
TIC236B	56004
TIC236D	56006
TIC242B	5673
TIC242D	5675
TIC242E	5676
TIC252B	5683
TIC252D	5685
TIC252E	5686
TIC252M	5687
TIC262B	5683
TIC262D	5685
TIC262E	5686
TIC262M	5687
TIC272B	5693
TIC272D	5695
TIC272M	5697
TIC536F	85
TIC2420	5677
TIL31	3028
TIL34	3028
TIL64	3032
TIL66	3032
TIL67	3032
TIL81	3032
TIL111	3042
TIL113	3041
TIL114	3042
TIL116	3043
TIL117	3041
TIL119	3044
TIL124	3041
TIL125	3041
TIL126	3041
TIL143	3100
TIL144	3100
TIL145	3101
TIL146	3101
TIL153	3041
TIL154	3041
TIL155	3041
TIL158	3102
TIL159	3102
TIL160	3103
TIL161	3103
TIL209A	3007
TIL211	3010
TIL212-1	3009
TIL216-1	3008
TIL220	3018
TIL224-1	3021
TIL228-2	3019
TIL234-1	3024
TIL241-1	3018
TIL302	3050
TIL304	3051
TIL310(RHD)	3053
TIL312(LHD)	3061
TIL312(RHD)	3052
TIL314(LHD)	3063
TIL314(RHD)	3054
TIL316(LHD)	3062
TIL321	3078
TIL322	3078
TIL-31	3028
TIL-32	3050
TIL-34	3028
TIL-81	3032
TIL-111	3042
TIL-113	3041
TIL-114	3042
TIL-116	3043
TIL-211	3010
TIL-212-1	3009
TIL-216-1	3008
TIL-216B	3007
TIL-220	3018
TIL-224-1	3021
TIL-234-1	3024
TIL-241-1	3018
TIL-304	3051
TIL-312(LHD)	3061
TIL-312(RHD)	3052
TIL-314(LHD)	3063
TIL-314(RHD)	3054
TIL-316(LHD)	3062
TIL-316(RHD)	3053
TIL-321	3078
TIL-322	3079
TIM-01	160
TIM-10	160
TIM-11	160
TIP04	283
TIP3A	197
TIP4	196
TIP14	184
TIP24	152
TIP27	157
TIP29	291
TIP29A	291
TIP29B	196
TIP29C	291
TIP29XA	196
TIP30	153
TIP30A	292
TIP30B	292
TIP30C	292
TIP31	152
TIP31A	152
TIP31B	196
TIP31C	291
TIP32	153
TIP32A	292
TIP32B	197
TIP32C	292
TIP33	390
TIP33/A	390
TIP33/B	390
TIP33A	390
TIP33B	390
TIP33C	390
TIP34	391
TIP34/A	391
TIP34/B	391
TIP34/C	391
TIP34A	391
TIP34B	391
TIP34C	391
TIP35	392
TIP35/A	392
TIP35/B	392
TIP35/C	392
TIP35A	392
TIP35B	392
TIP35C	392
TIP36	393
TIP36/A	393
TIP36/B	393
TIP36/C	393
TIP36A	393
TIP36B	393
TIP36C	393
TIP41	196
TIP41/B	331
TIP41/C	331
TIP41A	196
TIP41B	331
TIP41C	331
TIP42	197
TIP42/A	332
TIP42/B	332
TIP42/C	332
TIP42A	197
TIP42B	332
TIP42C	332
TIP47	198
TIP48	198
TIP49	198
TIP50	198
TIP51	394
TIP52	394
TIP53	394
TIP54	394
TIP61	152
TIP61A	152
TIP61B	291
TIP61C	291
TIP62	153
TIP62A	153
TIP62AF	153
TIP62B	292
TIP62C	292
TIP73	331
TIP73A	331
TIP73B	331
TIP73C	331
TIP100	261
TIP101	261
TIP102	261
TIP105	262
TIP106	262
TIP107	262
TIP110	261
TIP111	261
TIP112	261
TIP115	262
TIP116	262
TIP117	262
TIP120	261
TIP121	261
TIP122	261
TIP125	262
TIP126	262
TIP127	262
TIP130	261
TIP131	261
TIP132	261
TIP135	262
TIP136	262
TIP137	262
TIP140	270
TIP141	270
TIP142	270
TIP145	271
TIP146	271
TIP147	271
TIP418	331
TIP503	175
TIP544	180
TIP550	165
TIP552	165
TIP553	165
TIP554	162
TIP559	283
TIP560	283
TIP561	283
TIP562	283
TIP563	283
TIP640	270
TIP641	270
TIP642	270
TIP645	271
TIP646	271
TIP647	271
TIP2955	393
TIP3055	392
TIP-14	152
TIP-24	196
TIP-29	152
TIP-29T	198
TIP-30	153
TIP-30A	292
TIP-31	196
TIP-31A	152
TIP-31B	196
TIP-32	292
TIP-32A	292
TIP-33	390
TIP-33A	390
TIP-33B	390
TIP-33C	390
TIP-34	391
TIP-34A	391
TIP-34B	391
TIP-34C	391
TIP-35	392
TIP-35A	392
TIP-35B	392
TIP-35C	392
TIP-36	393
TIP-36A	393
TIP-36B	393
TIP-36C	393
TIP-41	331
TIP-41A	331
TIP-41B	331
TIP-41C	331
TIP-42	332
TIP-42A	332
TIP-42B	332
TIP-42C	332
TIP-51	394
TIP-52	394
TIP-53	394
TIP-54	394
TIP-73	331
TIP-73A	331
TIP-73B	331
TIP-73C	331
TIP-115	262
TIR01	116
TIR02	116
TIR03	116
TIR04	116
TIR05	116
TIR06	116
TIR07	125
TIR08	125
TIR09	125
TIR10	125
TIS03	159
TIS04	159
TIS14	133
TIS18	161
TIS22	123AP
TIS23	123AP
TIS24	108
TIS34	132
TIS37	159
TIS38	159
TIS42	132
TIS44	123AP
TIS45	123AP
TIS46	123AP
TIS47	123AP
TIS48	123AP
TIS49	123AP
TIS50	159
TIS51	123AP
TIS52	123AP
TIS53	159
TIS54	159
TIS55	123AP
TIS56	123AP
TIS57	123AP
TIS58	132
TIS59	132
TIS60	123AP
TIS60A	128
TIS60B	128
TIS60C	128
TIS60D	128
TIS60E	128
TIS60M	128
TIS61	159
TIS61A	129
TIS61B	129
TIS61C	129
TIS61D	129
TIS61E	129
TIS61M	129
TIS62	108
TIS63	108
TIS64	108
TIS71	123AP
TIS72	123AP
TIS74(SDG)	467
TIS78	133
TIS79	133
TIS82	186
TIS83	123AP
TIS84	108
TIS85	108
TIS86	107
TIS87	107
TIS88	132
TIS90	85
TIS90-2	123AP
TIS91	290A
TIS92	123AP
TIS92-BLU	123AP
TIS92-GRN	123AP
TIS92-GRY	123AP
TIS92-VIO	123AP
TIS92-YEL	123AP
TIS92M	123AP
TIS93	159
TIS93-BLU	159
TIS93-GRN	159
TIS93-GRY	159
TIS93-VIO	159
TIS93-YEL	159
TIS93M	159
TIS94	199
TIS94(AFAMP)	123AP
TIS94(AFC)	614
TIS94(DIO)	614
TIS94(XSTR)	123AP
TIS95	289A
TIS96	289A
TIS97	199
TIS98	123AP
TIS98A	123AP
TIS99	123AP
TIS100	154
TIS101	154
TIS102	154
TIS103	154
TIS104	159
TIS105	108
TIS106	194
TIS107	128
TIS108	107
TIS109	195A
TIS110	195A
TIS111	195A
TIS112	159
TIS113	123AP
TIS114	123AP
TIS125	229
TIS128	106
TIS133	293
TIS134	293
TIS138	106
TIS412	107
TIS991	159
TIS992	123AP
TIS993	159
TIS-03	159
TIS-1B	107
TIS-18	161
TIS-62	123AP
TIS-88	132
TIS-94	199
TIS-97	199
TIS-125	123AP
TISM74LS00N	74LS00
TIU3304	912
TIX90	102A
TIX91	160
TIX92	160
TIX316	160
TIX440	5940
TIX441	5944
TIX442	5944
TIX712	123AP
TIX804	159
TIX805	159
TIX876	108
TIX880	108
TIX888	195A
TIX890	159
TIX891	159
TIX895	100
TIX896	101
TIX1392	195A
TIX1393	195A
TIX3016	160
TIX3016A	160
TIX3032	160
TIX-M01	160
TIX-M02	160
TIX-M03	160
TIX-M04	160
TIX-M05	160
TIX-M06	160
TIX-M07	160
TIX-M08	160
TIX-M11	160
TIX-M14	161
TIX-M15	161
TIX-M16	161
TIX-M17	160
TIX-M101	160
TIX-M201	160
TIX-M202	160
TIX-M203	160
TIX-M204	160
TIX-M205	160
TIX-M206	160
TIX-M207	160
TIXA01	100
TIXA02	100
TIXA03	100
TIXA04	100
TIXA05	100
TIXA-03	100
TIXA-04	100
TIXA-05	100
TIXD747	134A
TIXD753	137A
TIXD758	140A
TIXM01	160
TIXM02	160
TIXM03	160
TIXM04	160
TIXM05	160
TIXM06	160
TIXM07	160
TIXM08	160
TIXM10	160
TIXM11	160
TIXM13	160
TIXM14	160
TIXM15	160
TIXM16	160
TIXM17	160
TIXM18	160
TIXM19	160
TIXM101	160
TIXM103	160
TIXM104	160
TIXM105	160
TIXM106	160
TIXM107	160
TIXM108	160
TIXM201	160
TIXM202	160
TIXM203	160
TIXM204	160
TIXM205	160
TIXM206	160
TIXM207	160
TIXM-201	160
TIXM-203	160
TIXM-205	160
TIXM-206	160
TIXS09	108
TIXS10	108
TIXS12	123AP
TIXS13	123AP
TIXS28	108
TIXS29	108
TIXS30	108
TIXS31	108
TJ5A	116
TJ10A	116
TJ15A	116
TJ20A	116
TJ25A	116
TJ30A	116
TJ35A	116
TJ40A	116
TJ60A	116
TJ-5A	116
TK5	117
TK10	117
TK11	117
TK20	117
TK21	117
TK23C	102A
TK30	117
TK33C	101
TK40	117
TK40A	102A
TK40C	102
TK40CA	102A
TK41	117
TK41A	102A
TK41C	160
TK42	102
TK42A	102A
TK42C	160
TK45C	102
TK49C	102A
TK50	117
TK60	117
TK61	117
TK82	194
TK400	116
TK582	294
TK600	116
TK705M	113A
TK705M12/1	113A
TK800	125
TK1000	125
TK1201K	5570
TK1202K	5570
TK1203K	5572
TK1204K	5572
TK1205K	5572
TK1206K	5572
TK1208K	5574
TK1209K	5574
TK1210K	5574
TK1211K	5574
TK1212K	5574
TK1228-001	160
TK1228-1001	126
TK1228-1002	102A
TK1228-1003	102A
TK1228-1004	102A
TK1228-1005	102A
TK1228-1006	102A
TK1228-1007	102A
TK1228-1008	123
TK1228-1009	123
TK1228-1010	123AP
TK1228-1011	123AP
TK1228-1012	123AP
TK2601K	5580
TK2602K	5580
TK2603K	5582
TK2604K	5582
TK2605K	5582
TK2606K	5582
TK2607K	5584
TK2608K	5584
TK2609K	5584
TK2610K	5584
TK2611K	5584
TK2612K	5584
TK9201	181
TK30551	181
TK30552	181
TK30555	181
TK30556	181
TK30557	181
TK30560	181
TK-10	116
TK-23C	102A
TK-30	116
TK-40	116
TK-40C	102A
TK-41	116
TK-41C	102A
TK-42C	102A
TK-45C	102A
TK-705M	113A
TKF5	116
TKF10	116
TKF20	116
TKF40	116
TKF60	116
TKF80	125
TKF100	125
TKK-2SC535-B	107
TKTA562-0	290A
TL061CDP	887M
TL061CP	887M
TL062CDP	889M
TL062CP	889M
TL071	857M
TL071AC	857M
TL071ACP	857M
TL071C	857M
TL071CD	857SM
TL071CFP	857SM
TL071CP	857M
TL072ACP	858M
TL072CD	858SM
TL072CP	858M
TL074	859
TL074CD	859SM

PART NUMBER	NTE REPLACEMENT
TL074CN	859
TL081	857M
TL081ACP	857M
TL081CP	857M
TL082	858M
TL082CP	858M
TL084	859
TL084CN	859
TL084CP	859
TL084N	859
TL084P	859
TL1	116
TL2	116
TL2SA881Q	21
TL2SA881R	21
TL2SC2021R	16
TL11	116
TL12	116
TL21	116
TL22	116
TL31	116
TL32	116
TL41	116
TL42	116
TL51	116
TL61	116
TL74H87N	74H87
TL74H183N	74H183
TL402	5309
TL402-B	5310
TL402B	5310
TL406-B	5319
TL406B	5319
TL431ACD	999SM
TL431ACP	999M
TL431CD	999SM
TL431CP	999M
TL494	1729
TL494C	1729
TL494CN	1729
TL494N	1729
TL1003(KAG)	5408
TL1555P	955M
TL2003(KAG)	5409
TL4558P	778A
TL6003(KAG)	5410
TL7400N	7400
TL7401N	7401
TL7402N	7402
TL7403N	7403
TL7404N	7404
TL7405N	7405
TL7406N	7406
TL7407N	7407
TL7409N	7409
TL7410N	7410
TL7412N	7412
TL7413N	7413
TL7416N	7416
TL7420N	7420
TL7423N	7423
TL7425N	7425
TL7426N	7426
TL7430N	7430
TL7437N	7437
TL7438N	7438
TL7440N	7440
TL7442N	7442
TL7443N	7443
TL7444N	7444
TL7445N	7445
TL7446AN	7446
TL7447AN	7447
TL7448N	7448
TL7450N	7450
TL7451N	7451
TL7453N	7453
TL7454N	7454
TL7460N	7460
TL7470N	7470
TL7472N	7472
TL7473N	7473
TL7474N	7474
TL7475N	7475
TL7476N	7476
TL7480N	7480
TL7482N	7482
TL7483N	7483
TL7485N	7485
TL7486N	7486
TL7489N	7489
TL7490N	7490
TL7491N	7491
TL7492N	7492
TL7493N	7493A
TL7494N	7494
TL7495AN	7495
TL7496N	7496
TL7497N	7497
TL74107N	74107
TL74121N	74121
TL74122N	74122
TL74123N	74123
TL74141N	74141
TL74145N	74145
TL74150N	74150
TL74151N	74151
TL74153N	74153
TL74154N	74154
TL74155N	74155
TL74156N	74156
TL74162N	74162
TL74163N	74163
TL74164N	74164

PART NUMBER	NTE REPLACEMENT
TL74165N	74165
TL74166N	74166
TL74180N	74180
TL74181N	74181
TL74182N	74182
TL74190N	74190
TL74191N	74191
TL74192N	74192
TL74193N	74193
TL74196N	74196
TL74197N	74197
TL74198N	74198
TL74199N	74199
TLA7601G	1673
TLBG5410	3131
TLBY5410	3130
TLC555CJG	955MC
TLC555CP	955MC
TLC556	978C
TLC556C	978C
TLC556CN	978C
TLG103	3014
TLG114	3024
TLG122	3003
TLG124	3010
TLG2003(KAG)	5408
TLG4003(KAG)	5409
TLG6003(KAG)	5410
TLH340MF	5465
TLO72CFP	858SM
TLO81	857M
TLO81CP	857M
TLO82CP	858M
TLP505D	3046
TLP505G	3046
TLP521-1	3098
TLP531	3041
TLP531-AUDIO	3041
TLP541	3046
TLP541G	3091
TLP551	3092
TLP621	3098
TLP621-1	3098
TLP621-1-GB	3098
TLP621-GB	3098
TLP621-GR	3098
TLP621GB	3098
TLP621GR	3098
TLP631	3041
TLP635	3096
TLP635(GB)	3096
TLP635GB	3096
TLP2530	3095
TLP2531	3095
TLP2630	3094
TLP3010	3047
TLP3040	3097
TLP3041	3097
TLP-551	3092
TLP-621-GB	3098
TLR104	3012
TLR105	3013
TLR113	3025
TLR114	3018
TLR121	3000
TLR122	3004
TLR123	3007
TLR124	3007
TLR145	3013
TLR312	3056
TLR313	3052
TLR314	3065
TLR1140	3023
TLR1240	3009
TLRG101	3016
TLY114	3021
TLY124	3011
TM1	5870
TM2	5940
TM2SC1685	85
TM3	5874
TM4	5874
TM5	5940
TM6	5874
TM7	5940
TM8	5940
TM9	5940
TM11	5872
TM12	5872
TM13	5944
TM14	5874
TM15	5874
TM16	5874
TM17	5944
TM18	5944
TM19	5944
TM21	5874
TM22	5874
TM23	5944
TM24	5944
TM25	5944
TM26	5944
TM27	5944
TM28	5944
TM29	5944
TM31	5944
TM32	5874
TM33	116
TM34	5874
TM35	5874
TM36	5874
TM37	5874
TM38	5874
TM39	5874

PART NUMBER	NTE REPLACEMENT
TM41	5878
TM42	5878
TM43	116
TM44	5874
TM45	5874
TM46	5874
TM47	5874
TM48	5874
TM49	5874
TM51	5882
TM52	5882
TM55	5882
TM56	5882
TM61	156
TM62	116
TM63	116
TM65	116
TM66	116
TM84	156
TM85	156
TM86	125
TM100	100
TM101	101
TM102	102
TM102A	102A
TM103	103
TM103A	103A
TM104	156
TM104MP	104MP
TM105	156
TM106	106
TM107	107
TM108	108
TM109	109
TM110	110MP
TM112	112
TM113	113A
TM113A	113A
TM116	116
TM117	117
TM118	118
TM120	120
TM121	121
TM121MP	121MP
TM123	123
TM123A	123AP
TM123AP	123AP
TM124	124
TM125	125
TM126	126
TM127	127
TM128	128
TM129	129
TM130	130
TM130MP	130MP
TM131	131
TM131MP	131MP
TM132	132
TM133	133
TM134	134A
TM134A	134A
TM135	135A
TM135A	135A
TM136	136A
TM136A	136A
TM137	137A
TM137A	137A
TM138	138A
TM138A	138A
TM139	139A
TM139A	139A
TM140	140A
TM140A	140A
TM141	141A
TM141A	141A
TM142	142A
TM142A	142A
TM143	143A
TM143A	143A
TM144	144A
TM144A	144A
TM145	145A
TM145A	145A
TM146	146A
TM146A	146A
TM147	147A
TM147A	147A
TM148	148A
TM148A	148A
TM149	149A
TM149A	149A
TM150A	150A
TM151	151A
TM151A	151A
TM152	152
TM153	153
TM154	154
TM155	155
TM156	156
TM157	157
TM158	158
TM159	159
TM160	160
TM161	161
TM162	162
TM164	164
TM165	165
TM166	166
TM167	167
TM168	168
TM169	169
TM170	170
TM171	171
TM172A	172A

PART NUMBER	NTE REPLACEMENT
TM173BP	173BP
TM174	174
TM175	175
TM176	176
TM177	177
TM178MP	178MP
TM179	179
TM180	180
TM181	181
TM182	182
TM183	183
TM184	184
TM185	185
TM186	186
TM186A	186A
TM187	187
TM187A	187A
TM188	188
TM189	189
TM190	190
TM191	191
TM192	192
TM193	193
TM194	194
TM195A	195A
TM196	196
TM197	197
TM198	198
TM199	199
TM210	210
TM211	211
TM213	213
TM218	218
TM219	219
TM221	221
TM222	222
TM224	224
TM225	225
TM226	226
TM226MP	226MP
TM229	229
TM230	230
TM231	231
TM232	232
TM233	233
TM234	234
TM235	235
TM236	236
TM237	237
TM238	238
TM241	241
TM242	242
TM243	243
TM244	244
TM245	245
TM246	246
TM247	247
TM248	248
TM249	249
TM250	250
TM251	251
TM252	252
TM253	253
TM254	254
TM257	257
TM259	259
TM261	261
TM262	262
TM263	263
TM265	265
TM267	267
TM268	268
TM269	269
TM270	270
TM271	271
TM272	272
TM273	273
TM274	274
TM275	275
TM276	230
TM278	278
TM280	280
TM280MP	280MP
TM281	281
TM283	283
TM284	284
TM284MP	284MP
TM285	285
TM287	287
TM288	288
TM289	289
TM289MP	289MP
TM290	290
TM291	291
TM292	292
TM293	293
TM293MP	293MP
TM294	294
TM295	295
TM297	297
TM298	298
TM299	299
TM300	300
TM300MP	300MP
TM302	302
TM306	306
TM308	308
TM309K	309K
TM310	310
TM311	311
TM312	312
TM313	313
TM314	314
TM315	315

PART NUMBER	NTE REPLACEMENT
TM316	316
TM317	317
TM318	318
TM319	319P
TM320	320
TM322	322
TM323	323
TM324	324
TM325	325
TM326	326
TM327	327
TM328	328
TM329	329
TM330	330
TM331	331
TM332	332
TM333	333
TM334	334
TM336	336
TM337	337
TM338	338
TM339	339
TM340	340
TM341	341
TM341S-L	5620
TM342	342
TM343	343
TM344	344
TM345	345
TM346	346
TM347	347
TM348	348
TM349	349
TM350	350
TM351	351
TM353	353
TM354	354
TM355	355
TM356	356
TM357	357
TM359	359
TM360	360
TM361	361
TM361S-L	5620
TM362	362
TM363	363
TM364	364
TM365	365
TM366	366
TM367	367
TM368	368
TM373	373
TM374	374
TM375	375
TM376	376
TM377	377
TM378	378
TM379	379
TM382	382
TM383	383
TM384	384
TM385	385
TM386	386
TM387	387
TM388	388
TM389	389
TM390	390
TM391	391
TM392	391
TM393	393
TM394	394
TM395	395
TM396	396
TM397	397
TM500A	500A
TM503	503
TM504	504
TM505	505
TM506	506
TM507	507
TM513	513
TM519	519
TM521	521
TM522	522
TM523	523
TM524	524V15
TM525	525
TM526	526A
TM526A	526A
TM529	529
TM530	530
TM531	539
TM532	532
TM533	533
TM534	534
TM536A	536A
TM537	537
TM541S-L	5620
TM552	552
TM561S-L	5620
TM605	605A
TM703A	703
TM704	704
TM708	708
TM709	709
TM711	711
TM712	712
TM714	714
TM721	721
TM722	722
TM723	723
TM725	725
TM726	726
TM731	731

PART NUMBER	NTE REPLACEMENT
TM736	736
TM737	737
TM738	738
TM740A	740A
TM742	742
TM743	743
TM744	744
TM746	746
TM747	747
TM749	749
TM750	750
TM754	754
TM778A	778A
TM780	780
TM783	783
TM784	784
TM787	787
TM789	789
TM791	791
TM799	799
TM801	801
TM807	807
TM812	812
TM815	815
TM818	818
TM821	821
TM822	822
TM823	823
TM824	824
TM825	825
TM832	832
TM834	834
TM841S-L	5620
TM861S-L	5620
TM903	903
TM904	904
TM905	905
TM906	906
TM907	907
TM908	908
TM910D	910D
TM911	911
TM912	912
TM914	914
TM915	915
TM916	916
TM917	917
TM923	923
TM923D	923D
TM925	925
TM940	940
TM941	941
TM941D	941D
TM941M	941M
TM947	947
TM947D	947D
TM949	949
TM955M	955M
TM960	960
TM961	961
TM962	962
TM963	963
TM966	966
TM967	967
TM968	968
TM969	969
TM971	971
TM972	972
TM973	973
TM973D	973D
TM975	975
TM976	976
TM977	977
TM978	978
TM980	980
TM981	981
TM984	984
TM987	987
TM988	988
TM989	989
TM990	990
TM991	991
TM992	992
TM1002	1002
TM1003	1003
TM1004	1004
TM1005	1005
TM1006	1006
TM1009	1009
TM1010	1010
TM1012	1012
TM1013	1013
TM1014	1014
TM1016	1016
TM1019	1019
TM1027	1027
TM1031	1031
TM1032	1032
TM1035	1035
TM1036	1036
TM1038	1038
TM1039	1039
TM1040	1040
TM1041	1041
TM1042	1042
TM1043	1043
TM1045	1045
TM1046	1046
TM1047	1047
TM1049	1049
TM1052	1052
TM1053	1053
TM1054	1054
TM1055	1055

PART NUMBER	NTE REPLACEMENT
TM1056	1056
TM1057	1057
TM1058	1058
TM1060	1060
TM1061	1061
TM1062	1062
TM1064	1064
TM1072	1072
TM1073	1073
TM1075A	1075A
TM1079	1079
TM1080	1080
TM1081A	1081A
TM1082	1082
TM1083	1083
TM1085	1085
TM1087	1087
TM1089	1089
TM1091	1091
TM1092	1092
TM1093	1093
TM1094	1094
TM1096	1096
TM1098	1098
TM1099	1099
TM1100	1100
TM1101	1101
TM1102	1102
TM1103	1103
TM1104	1104
TM1106	1106
TM1107	1107
TM1108	1108
TM1110	1110
TM1115	1115
TM1116	1116
TM1117	1117
TM1119	1119
TM1120	1120
TM1121	1121
TM1122	1122
TM1123	1123
TM1124	1124
TM1126	1126
TM1127	1127
TM1128	1128
TM1130	1130
TM1135	1135
TM1137	1137
TM1139	1139
TM1141	1141
TM1142	1142
TM1149	1149
TM1152	1152
TM1154	1154
TM1155	1155
TM1156	1156
TM1158	1158
TM1160	1160
TM1165	1165
TM1166	1166
TM1167	1167
TM1170	1170
TM1171	1171
TM1172	1172
TM1174	1174
TM1176	1176
TM1179	1179
TM1180	1180
TM1181	1181
TM1184	1184
TM1185	1185
TM1187	1187
TM1188	1188
TM1192	1192
TM1195	1195
TM1197	1197
TM1200	1200
TM1201	1201
TM1202	1202
TM1203	1203
TM1206	1206
TM1209	1209
TM1210	1210
TM1211	1211
TM1214	1214
TM1215	1215
TM1216	1216
TM1220	1218
TM1221	1221
TM1223	1223
TM1224	1224
TM1226	1226
TM1227	1227
TM1228	1228
TM1230	1230
TM1231	1231
TM1232	1232
TM1233	1233
TM1234	1234
TM1235	1235
TM1236	1236
TM1237	1237
TM1241	1241
TM1242	1242
TM1243	1243
TM1245	1245
TM1248	1248
TM1250	1250
TM1254	1254
TM1257	1257
TM1262	1262
TM1263	1263
TM1264	1264

PART NUMBER	NTE REPLACEMENT
TM1265	1265
TM1267	1267
TM1268	1268
TM1271	1271
TM1273	1273
TM1300	1300
TM1301	1301
TM1303	1303
TM1304	1304
TM1306	1306
TM1308	1308
TM1309	1309
TM1311	1311
TM1312	1312
TM1613	293
TM1614	159
TM1711	293
TM1712	159
TM2011	2011
TM2012	2012
TM2013	2013
TM2014	2014
TM2015	2015
TM2016	2016
TM2017	2017
TM2018	2018
TM2019	2019
TM2020	2020
TM2021	2021
TM2022	2022
TM2023	2023
TM2613	123AP
TM2614	159
TM2711	123AP
TM2712	159
TM4000	4000
TM4001B	4001B
TM4002B	4002B
TM4006B	4006B
TM4007B	4007
TM4008B	4008B
TM4011B	4011B
TM4012B	4012B
TM4013B	4013B
TM4014B	4014B
TM4015B	4015B
TM4016B	4016B
TM4017B	4017B
TM4018B	4018B
TM4019B	4019B
TM4021B	4021B
TM4022B	4022B
TM4023B	4023B
TM4024B	4024B
TM4025B	4025B
TM4027B	4027B
TM4028B	4028B
TM4029B	4029B
TM4030B	4030B
TM4034B	4034B
TM4035B	4035B
TM4040B	4040B
TM4042B	4042B
TM4043B	4043B
TM4044B	4044B
TM4050B	4050B
TM4051B	4051B
TM4052B	4052B
TM4053B	4053B
TM4055B	4055B
TM4060B	4060B
TM4063B	4063B
TM4066B	4066B
TM4068B	4068B
TM4069	4069
TM4071B	4071B
TM4072B	4072B
TM4073B	4073B
TM4075B	4075B
TM4076B	4076B
TM4077B	4077B
TM4078B	4078B
TM4081B	4081B
TM4082B	4082B
TM4085B	4085B
TM4086B	4086B
TM4093B	4093B
TM4098B	4098B
TM4099B	4099B
TM4503	40097B
TM4510B	4510B
TM4511B	4511B
TM4512B	4512B
TM4514B	4514B
TM4515B	4515B
TM4516B	4516B
TM4518B	4518B
TM4520B	4520B
TM4522B	4522B
TM4527B	4527B
TM4539B	4539B
TM4555B	4555B
TM4556B	4556B
TM5000A	5000A
TM5001A	5001A
TM5002A	5002A
TM5003A	5003A
TM5004A	5004A
TM5005A	5005A
TM5006A	5006A
TM5007A	5007A
TM5008A	5008A
TM5009A	5009A
TM5010A	5010A

PART NUMBER	NTE REPLACEMENT
TM5011A	5011A
TM5012A	5012A
TM5013A	5013A
TM5014A	5014A
TM5015A	5015A
TM5016	5016A
TM5016A	5016A
TM5017A	5017A
TM5018A	5018A
TM5019A	5019A
TM5020A	5020A
TM5021A	5021A
TM5022	5022A
TM5022A	5022A
TM5023	5023A
TM5023A	5023A
TM5024A	5024A
TM5025A	5025A
TM5026A	5026A
TM5027A	5027A
TM5028A	5028A
TM5029A	5029A
TM5030A	5030A
TM5031A	5031A
TM5032A	5032A
TM5033A	5033A
TM5034A	5034A
TM5035A	5035A
TM5036A	5036A
TM5037A	5037A
TM5038A	5038A
TM5039A	5039A
TM5040A	5040A
TM5041A	5041A
TM5042A	5042A
TM5043A	5043A
TM5044A	5043A
TM5045A	5045A
TM5046A	5046A
TM5047A	5047A
TM5048A	5048A
TM5049A	5049A
TM5050A	5050A
TM5051A	5051A
TM5052A	5052A
TM5053A	5053A
TM5054A	5054A
TM5055A	5055A
TM5056A	5056A
TM5057A	5057A
TM5058A	5058A
TM5059A	5059A
TM5060A	5060A
TM5061	5061A
TM5061A	5061A
TM5062A	5062A
TM5063A	5063A
TM5064A	5064A
TM5065A	5065A
TM5066A	5066A
TM5067A	5067A
TM5068	5068A
TM5068A	5068A
TM5069A	5069A
TM5070	5070A
TM5070A	5070A
TM5071	5071A
TM5071A	5071A
TM5072	5072A
TM5072A	5072A
TM5073	5073A
TM5073A	5073A
TM5074	5074A
TM5074A	5074A
TM5075	5075A
TM5075A	5075A
TM5076	5076A
TM5076A	5076A
TM5077	5077A
TM5077A	5077A
TM5078A	5078A
TM5079	5079A
TM5079A	5079A
TM5080	5080A
TM5080A	5080A
TM5081	5081A
TM5081A	5081A
TM5082	5082A
TM5082A	5082A
TM5083	5083A
TM5083A	5083A
TM5084	5084A
TM5084A	5084A
TM5085A	5085A
TM5086	5086A
TM5086A	5086A
TM5087A	5087A
TM5088A	5088A
TM5089A	5089A
TM5090A	5090A
TM5091A	5091A
TM5092A	5092A
TM5093A	5093A
TM5094A	5094A
TM5095	5095A
TM5095A	5095A
TM5096	5096A
TM5096A	5096A
TM5097	5097A
TM5097A	5097A
TM5098	5098A
TM5098A	5098A
TM5099	5099A
TM5099A	5099A

PART NUMBER	NTE REPLACEMENT
TM5100	5100A
TM5101	5101A
TM5101A	5101A
TM5102A	5102A
TM5103A	5103A
TM5104A	5104A
TM5105	5105A
TM5105A	5105A
TM5111A	5111A
TM5112A	5112A
TM5113A	5113A
TM5114A	5114A
TM5115A	5115A
TM5116	5116A
TM5116A	5116A
TM5117A	5117A
TM5118A	5118A
TM5119A	5119A
TM5120A	5120A
TM5121A	5121A
TM5122A	5122A
TM5123A	5123A
TM5124A	5124A
TM5125A	5125A
TM5126A	5126A
TM5127A	5127A
TM5128A	5128A
TM5129A	5129A
TM5130	5130A
TM5130A	5130A
TM5131A	5131A
TM5132A	5132A
TM5133A	5133A
TM5134A	5134A
TM5135	5135A
TM5135A	5135A
TM5136	5136A
TM5136A	5136A
TM5137A	5137A
TM5138	5138A
TM5138A	5138A
TM5139A	5139A
TM5140A	5140A
TM5141A	5141A
TM5142A	5142A
TM5143A	5143A
TM5144A	5144A
TM5145A	5145A
TM5146A	5146A
TM5147A	5147A
TM5148A	5148A
TM5149A	5149A
TM5150A	5150A
TM5151A	5151A
TM5152A	5152A
TM5153A	5153A
TM5154A	5154A
TM5155A	5155A
TM5156A	5156A
TM5157A	5157A
TM5158A	5158A
TM5159A	5159A
TM5160	5160A
TM5160A	5160A
TM5161A	5161A
TM5162A	5162A
TM5163A	5163A
TM5164A	5164A
TM5165A	5165A
TM5166A	5166A
TM5174A	5174A
TM5174AK	5174AK
TM5175A	5175A
TM5175AK	5175AK
TM5176A	5176A
TM5176AK	5176AK
TM5177A	5177A
TM5177AK	5177AK
TM5178A	5178A
TM5178AK	5178AK
TM5179A	5179A
TM5179AK	5179AK
TM5180A	5180A
TM5180AK	5180AK
TM5181A	5181A
TM5181AK	5181AK
TM5182A	5182A
TM5182AK	5182AK
TM5183A	5183A
TM5183AK	5183AK
TM5184A	5184A
TM5184AK	5184AK
TM5185A	5185A
TM5185AK	5185AK
TM5186A	5186A
TM5186AK	5186AK
TM5187A	5187A
TM5187AK	5187AK
TM5188A	5188A
TM5188AK	5188AK
TM5189A	5189A
TM5189AK	5189AK
TM5190A	5190A
TM5190AK	5190AK
TM5191A	5191A
TM5191AK	5191AK
TM5192A	5192A
TM5192AK	5192AK
TM5193A	5193A
TM5193AK	5193AK
TM5194A	5194A
TM5194AK	5194AK
TM5195A	5195A
TM5195AK	5195AK

PART NUMBER	NTE REPLACEMENT
TM5196A	5196A
TM5196AK	5196AK
TM5197A	5197A
TM5197AK	5197AK
TM5198A	5198A
TM5198AK	5198AK
TM5199A	5199A
TM5199AK	5199AK
TM5200A	5200A
TM5200AK	5200AK
TM5201A	5201A
TM5201AK	5201AK
TM5202A	5202A
TM5202AK	5202AK
TM5203A	5203A
TM5203AK	5203AK
TM5204A	5204A
TM5204AK	5204AK
TM5205A	5205A
TM5205AK	5205AK
TM5206A	5206A
TM5206AK	5206AK
TM5207A	5207A
TM5207AK	5207AK
TM5208A	5208A
TM5208AK	5208AK
TM5209A	5209A
TM5209AK	5209AK
TM5210A	5210A
TM5210AK	5210AK
TM5211A	5211A
TM5211AK	5211AK
TM5212A	5212A
TM5212AK	5212AK
TM5213A	5213A
TM5213AK	5213AK
TM5214A	5214A
TM5214AK	5214AK
TM5215A	5215A
TM5215AK	5215AK
TM5216A	5216A
TM5216AK	5216AK
TM5217A	5217A
TM5217AK	5217AK
TM5218A	5218A
TM5218AK	5218AK
TM5219A	5219A
TM5219AK	5219AK
TM5220A	5220A
TM5220AK	5220AK
TM5221A	5221A
TM5221AK	5221AK
TM5222A	5222A
TM5222AK	5222AK
TM5223A	5223A
TM5223AK	5223AK
TM5224A	5224A
TM5224AK	5224AK
TM5225A	5225A
TM5225AK	5225AK
TM5226A	5226A
TM5226AK	5226AK
TM5227A	5227A
TM5227AK	5227AK
TM5228A	5228A
TM5228AK	5228AK
TM5229A	5229A
TM5229AK	5229AK
TM5230A	5230A
TM5230AK	5230AK
TM5231A	5231A
TM5231AK	5231AK
TM5232A	5232A
TM5232AK	5232AK
TM5240A	5240A
TM5240AK	5240AK
TM5241A	5241A
TM5241AK	5241AK
TM5242A	5242A
TM5242AK	5242AK
TM5243A	5243A
TM5243AK	5243AK
TM5244A	5244A
TM5244AK	5244AK
TM5245A	5245A
TM5245AK	5245AK
TM5246A	5246A
TM5246AK	5246AK
TM5247A	5247A
TM5247AK	5247AK
TM5248A	5248A
TM5248AK	5248AK
TM5249A	5249A
TM5249AK	5249AK
TM5250A	5250A
TM5250AK	5250AK
TM5251A	5251A
TM5251AK	5251AK
TM5252A	5252A
TM5252AK	5252AK
TM5253A	5253A
TM5253AK	5253AK
TM5254A	5254A
TM5254AK	5254AK
TM5255A	5255A
TM5255AK	5255AK
TM5256A	5256A
TM5256AK	5256AK
TM5257A	5257A
TM5257AK	5257AK
TM5258A	5257A
TM5258AK	5258AK
TM5259A	5259A
TM5259AK	5259AK

PART NUMBER	NTE REPLACEMENT
TM5260A	5260A
TM5260AK	5260AK
TM5261A	5261A
TM5261AK	5261AK
TM5262A	5262A
TM5262AK	5262AK
TM5263A	5263A
TM5263AK	5263AK
TM5264A	5264A
TM5264AK	5264AK
TM5265A	5265A
TM5265AK	5265AK
TM5266A	5266A
TM5266AK	5266AK
TM5267A	5267A
TM5267AK	5267AK
TM5268A	5268A
TM5268AK	5268AK
TM5269A	5269A
TM5269AK	5269AK
TM5270A	5270A
TM5270AK	5270AK
TM5271A	5271A
TM5271AK	5271AK
TM5272A	5272A
TM5272AK	5272AK
TM5273A	5273A
TM5273AK	5273AK
TM5274A	5274A
TM5274AK	5274AK
TM5275A	5275A
TM5275AK	5275AK
TM5276A	5276A
TM5276AK	5276AK
TM5277A	5277A
TM5277AK	5277AK
TM5278A	5278A
TM5278AK	5278AK
TM5279A	5279A
TM5279AK	5279AK
TM5280A	5280A
TM5280AK	5280AK
TM5281A	5281A
TM5281AK	5281AK
TM5282A	5282A
TM5282AK	5282AK
TM5283A	5283A
TM5283AK	5283AK
TM5284A	5284A
TM5284AK	5284AK
TM5285A	5285A
TM5285AK	5285AK
TM5286A	5286A
TM5286AK	5286AK
TM5287A	5287A
TM5287AK	5287AK
TM5288A	5288A
TM5288AK	5288AK
TM5289A	5289A
TM5289AK	5289AK
TM5290A	5290A
TM5290AK	5290AK
TM5291A	5291A
TM5291AK	5291AK
TM5292A	5292A
TM5292AK	5292AK
TM5293A	5293A
TM5293AK	5293AK
TM5294A	5294A
TM5294AK	5294AK
TM5295A	5295A
TM5295AK	5295AK
TM5296A	5296A
TM5296AK	5296AK
TM5404	5404
TM5414	5414
TM5444	5444
TM5448	5448
TM5452	5452
TM5454	5454
TM5455	5455
TM5800	5800
TM5802	5802
TM5804	5804
TM5806	5806
TM5982	5982
TM5986	5986
TM5987	5987
TM5990	5990
TM5994	5994
TM6402	6402
TM6407	6407
TM7492	7492
TM-22	106
TM-33	116
TM-43	116
TMD	5657
TMD01	135A
TMD01A	135A
TMD02	135A
TMD02A	135A
TMD03	137A
TMD03A	137A
TMD04	5014A
TMD04A	5014A
TMD06	5016A
TMD06A	5016A
TMD07	139A
TMD07A	139A
TMD08	140A
TMD08A	140A
TMD10	142A
TMD10A	142A
TMD41	116

PART NUMBER	NTE REPLACEMENT
TMD42	116
TMD45	116
TMH	5657
TMM322C	2708
TMM323C	2716
TMM416P-3	2117
TMM416P-4	2117
TMM2016	2128
TMM2016-73	2128
TMM2016AP	2128
TMM2016AP-10	2128
TMM2016P	2128
TMM2016P-1	2128
TMM2016P-2	2128
TMM2016P-7	2128
TMM2732	2732A
TMM2732D	2732A
TMM2764	2764
TMM2764-2	2764
TMM2764D-2	2764
TMM4164	4164
TMM4164-3	4164
TMM4164-4	4164
TMM4164P-3	4164
TMM27128AD-20	21128
TMM41256	4256
TMM41256-10	4256
TMM41256-15	21256
TMM-2SA847-F	91
TMM-2SA978-F	234
TMM-2SC2385-F	199
TMS1943	2060
TMS1943A2	2060
TMS1943N2	2060
TMS1943NL	2060
TMS1952	2061
TMS1952N2	2061
TMS2516	2716
TMS2516JL	2716
TMS2516JL-45	2716
TMS2532	2532
TMS2532-30	2532
TMS2532-35	2532
TMS2532-35JL	2532
TMS2532-45	2532
TMS2532-45JL	2532
TMS2532-JL	2532
TMS2532JL45	2532
TMS2708	2708
TMS2708JL	2708
TMS2716	2716
TMS2716C	2716
TMS2716JL	2716
TMS2716L	2716
TMS2732AJL-30	2732A
TMS2732AJL-35	2732A
TMS2764	2764
TMS2764-20	2764
TMS2764-25	2764
TMS2764-30	2764
TMS2764-45	2764
TMS2764-250	2764
TMS2764-300	2764
TMS2764JL-20	2764
TMS2764JL-25	2764
TMS2764JL-30	2764
TMS2764JL-45	2764
TMS2764JL-300	2764
TMS4033	2102
TMS4060	2107
TMS4060-1	2107
TMS4060-1JL	2107
TMS4060-1NL	2107
TMS4060-2	2107
TMS4060-2JL	2107
TMS4060-2NL	2107
TMS4060JL	2107
TMS4060JL-1	2107
TMS4060JL-2	2107
TMS4060NL	2107
TMS4060NL-1	2107
TMS4060NL-2	2107
TMS4116	2117
TMS4164	4164
TMS4164-15	4164
TMS4164-15NL	4164
TMS4164-15NLJ	4164
TMS4164-20	4164
TMS4164-20NL	4164
TMS4164-25	4164
TMS4164NLJ	4164
TMS8080A	8080A
TMS8080AN	8080A
TMT696	108
TMT697	108
TMT839	108
TMT840	108
TMT841	108
TMT842	108
TMT843	108
TMT1543	123AP
TMT2427	108
TMT-1543	123AP
TMT-2427	108
TM061703	159
TM061690	159
TN2SA733	290A
TN2SA733-Q	294
TN2SA733-Q-A	294
TN2SA733-Q-B	294
TN2SA733-Q-R	290
TN2SA733-R	294
TN2SA733-R-A	294
TN2SA733K	290A

PART NUMBER	NTE REPLACEMENT
TN2SA733P	290A
TN2SA733Q	294
TN2SA733R	290A
TN2SA817Y	298
TN2SA952L	290A
TN2SA953	290A
TN2SA953K	290A
TN2SA1175	290A
TN2SB810E	294
TN2SB810H	294
TN2SC	399
TN2SC945	85
TN2SC945-P	85
TN2SC945-P-Q	289
TN2SC945-Q	289A
TN2SC945-Q-R	289
TN2SC945-R	199
TN2SC945K	85
TN2SC945R	85
TN2SC1096-K	186A
TN2SC1096-K-L	287
TN2SC1096-L	186A
TN2SC1449K	295
TN2SC1507	198
TN2SC1507-K	198
TN2SC1507-K-A	198
TN2SC1507-L	198
TN2SC1507-L-A	198
TN2SC1507-M	198
TN2SC1507-M-A	198
TN2SC1507L	198
TN2SC1520	198
TN2SC1520-1	198
TN2SC1520-K-1	198
TN2SC1520-K-1A	198
TN2SC1520-K-3A	171
TN2SC1520-L-1	198
TN2SC1520-L-1A	198
TN2SC1520-L-3A	198
TN2SC1520-M-1	198
TN2SC1520-M-1A	198
TN2SC1520-M-3A	198
TN2SC1845	90
TN2SC1875	389
TN2SC1941	287
TN2SC2002	85
TN2SC2002K	289A
TN2SC2002L	85
TN2SC2785	85
TN2SC2785E	85
TN2SC2785F	85
TN2SC2785H	85
TN2SD471K	293
TN2SD568K	196
TN2SK68A	459
TN2SV2785E	85
TN3TC03001	2357
TN3TC05001	2416
TN3TD03001	2359
TN7TB03001	2355
TN7TC05001	2414
TN7TD03001	2359
TN41A	6402
TN53	123AP
TN55	123AP
TN56	123AP
TN59	123AP
TN60	123AP
TN61	123AP
TN62	123AP
TN63	123AP
TN64	123AP
TN79	192
TN80	123AP
TN81	192
TN237	123AP
TN421	128
TN591	102A
TN1711	128P
TN2017	128P
TN2102	128P
TN2270	128P
TN3019	128P
TN3020	128P
TN3053	128P
TN3200	161
TN3467	217
TN3904	123A
TN3906	159
TN4030	129P
TN4033	129P
TN4036	159
TN4037	159
TN4314	129P
TNC61688	172A
TNC61689	123AP
TNC61690	159
TNC61702	123AP
TNC61703	159
TNG	5657
TNJ6i672(RECT)	116
TNJ1034	199
TNJ1036	123AP
TNJ1173	161
TNJ6172(2SC722)	107
TNJ60063	160
TNJ60064	160
TNJ60065	160
TNJ60066	108
TNJ60067	160
TNJ60068	160
TNJ60069	160
TNJ60069(2SC74)	107
TNJ60070	102A

PART NUMBER	NTE REPLACEMENT
TNJ60071	160
TNJ60072	154
TNJ60073	160
TNJ60074	102A
TNJ60075	127
TNJ60076	123AP
TNJ60077	160
TNJ60078	162
TNJ60079	102A
TNJ60080	127
TNJ60279	160
TNJ60280	160
TNJ60281	160
TNJ60282	102A
TNJ60283	102A
TNJ60362	126
TNJ60363	126
TNJ60364	126
TNJ60365	102A
TNJ60447	107
TNJ60448	107
TNJ60449	107
TNJ60450	160
TNJ60451	175
TNJ60453	175
TNJ60454	121
TNJ60455	162
TNJ60456	160
TNJ60457	174
TNJ60604	107
TNJ60605	107
TNJ60606	107
TNJ60607	107
TNJ60608	100
TNJ60610	102A
TNJ60611	102A
TNJ60612	158
TNJ60728	102A
TNJ61217	107
TNJ61218	107
TNJ61219	123AP
TNJ61220	123AP
TNJ61221	102
TNJ61222	102A
TNJ61223	176
TNJ61282	102A
TNJ61671	101
TNJ61671(2SC688)	107
TNJ61671(2SD72)	103A
TNJ61672(2SK25)	132
TNJ61672(RECT)	116
TNJ61673	133
TNJ61673(2SB186)	102A
TNJ61673(2SK24)	133
TNJ61674	158
TNJ61679	107
TNJ61729	108
TNJ61730	107
TNJ61731	107
TNJ61734	103A
TNJ70450	186
TNJ70478	108
TNJ70478-1	108
TNJ70479	108
TNJ70479-1	123AP
TNJ70480	108
TNJ70481	193
TNJ70482	128
TNJ70483	131
TNJ70484	108
TNJ70537	123AP
TNJ70539	123AP
TNJ70540	184
TNJ70541	131
TNJ70634	102
TNJ70635	102
TNJ70637	123AP
TNJ70638	123AP
TNJ70639	123AP
TNJ70640	123AP
TNJ70641	160
TNJ70688	158
TNJ70691	199
TNJ71034	199
TNJ71035	128
TNJ71036	123AP
TNJ71037	159
TNJ71173	108
TNJ71234	128
TNJ71248	126
TNJ71252	192
TNJ71271	199
TNJ71277	199
TNJ71498	108
TNJ71629	107
TNJ71773	159
TNJ71774	159
TNJ71937	107
TNJ71963	107
TNJ71964	161
TNJ71965	199
TNJ72146	164
TNJ72147	124
TNJ72148	130
TNJ72149	165
TNJ72150	161
TNJ72151	161
TNJ72152	193
TNJ72153	124
TNJ72154	159
TNJ72275	161
TNJ72276	233
TNJ72277	107
TNJ72278	102A
TNJ72279	107
TNJ72280	123AP
TNJ72281	123AP
TNJ72282	154
TNJ72283	102A
TNJ72284	103A
TNJ72285	102A
TNJ72286	175
TNJ72287	102A
TNJ72288	128
TNJ72289	102A
TNJ72318	121
TNJ72319	163A
TNJ72320	162
TNJ72368	161
TNJ72701	161
TNJ72774	187
TNJ72775	186
TNJ72783	123AP
TNJ72784	123AP
TNJ-60066	108
TNJ-60067	160
TNJ-60068	160
TNJ-60069	160
TNJ-60070	102A
TNJ-60071	160
TNJ-60073	160
TNJ-60074	102A
TNJ-60075	127
TNJ-60076	123AP
TNJ-60077	160
TNJ-60079	102A
TNJ-60080	127
TNJ-60279	160
TNJ-60280	160
TNJ-60281	160
TNJ-60282	102A
TNJ-60283	102A
TNJ-60362	160
TNJ-60363	160
TNJ-60364	160
TNJ-60365	160
TNJ-60604	123AP
TNJ-60605	107
TNJ-60606	123AP
TNJ-60607	123AP
TNJ-60608	160
TNJ-60610	100
TNJ-60611	100
TNJ-60612	100
TNJ-60728	102A
TNN-2SK49-F2	312
TNT839	108
TNT840	108
TNT841	108
TNT842	123AP
TNT843	108
TNT-839	108
TNT-840	108
TNT-841	108
TNT-843	123AP
TNYTD03001	2359
T01-101	123AP
T01-104	123AP
T01-105	123AP
T02-24-C	428
T0101	102A
T0102	102A
T0103	102A
T0104	102A
T0225X	5534
T0425X	5534
T0625X	5534
T0-003	160
T0-004	160
T0-005	102A
T0-040	123AP
T0-012	121
T0-014	102A
T0-015	121
T0-033	123AP
T0-038	123AP
T0-039	123AP
T0-041	102A
T0-101	100
T0-102	100
T0-103	102A
T0-104	158
T0B	703
TP3TD06001	2360
TP20-0284	137A
TP29B	152
TP34	109
TP34A	109
TP100	5874
TP101	116
TP200	5874
TP201	116
TP300	5874
TP302	116
TP400	5874
TP402	116
TP1681B30-1	109
TP1681B30P	109
TP1681B1269	128
TP1681B1337	85
TP1681B1338	289A
TP1681B1367	85
TP1681B1421	85
TP1681B1433	85
TP1681B1501	116
TP1681B4015	85
TP2222	123AP
TP2222A	123AP
TP3638	159
TP3638A	193
TP4000	4000
TP4001	4001B
TP4001AN	4001B
TP4001BN	4001B
TP4001BP	4001B
TP4002	4002B
TP4002AN	4002B
TP4008AN	4008B
TP4008BN	4008B
TP4011	4011B
TP4011AN	4011B
TP4011B	4011B
TP4011BN	4011B
TP4011BP	4011B
TP4012	4012B
TP4012AN	4012B
TP4013	4013B
TP4013AN	4013B
TP4013BN	4013B
TP4015	4015B
TP4016	4016B
TP4016BN	4016B
TP4017	4017B
TP4017AN	4017B
TP4018AN	4018B
TP4018BN	4018B
TP4019	4019B
TP4019AN	4019B
TP4019BN	4019B
TP4020	4020B
TP4020AN	4020B
TP4020BN	4020B
TP4021	4021B
TP4022AN	4022B
TP4023	4023B
TP4023AN	4023B
TP4024	4024B
TP4024AN	4024B
TP4024BN	4024B
TP4025	4025B
TP4025AN	4025B
TP4027	4027B
TP4027AN	4027B
TP4027BN	4027B
TP4028AN	4028B
TP4028BN	4028B
TP4029AN	4029B
TP4030AN	4030B
TP4040	4040B
TP4040AN	4040B
TP4040BN	4040B
TP4042	4042B
TP4042AN	4042B
TP4042BN	4042B
TP4043AN	4043B
TP4043BN	4043B
TP4044AN	4044B
TP4044BN	4044B
TP4050	4050B
TP4051	4051B
TP4052	4052B
TP4067-409	116
TP4067-410	199
TP4067-411	199
TP4068BN	4068B
TP4069UBN	4069
TP4069UPN	4069
TP4071BN	4071B
TP4072BN	4072B
TP4073BN	4073B
TP4075BN	4075B
TP4078BN	4078B
TP4081	4081B
TP4081BN	4081B
TP4082BN	4082B
TP4123	123AP
TP4124	123AP
TP4125	159
TP4126	159
TP4257	159
TP4258	159
TP4274	101
TP4275	108
TP4511	4511B
TP4512	4512B
TP4518	4518B
TP4518AN	4518B
TP4520AN	4520B
TP4522AN	4522B
TPL541	3091
TPQ2221	2321
TPQ2222	2321
TPQ2483	2321
TPQ2484	2321
TPQ2906	2322
TPQ2907	2322
TPQ2907A	2322
TPQ3798	2322
TPQ3904	2321
TPQ3906	2322
TPQ5550	2323
TPQ5551	2323
TPQ6501	2320
TPQ6502	2320
TPQA05	2323
TPQA06	2323
TPS98	194
TPS604	3037
TPS605	3038
TPS6512	123AP
TPS6513	123AP
TPS6514	123AP
TPS6515	123AP
TPS6516	159
TPS6517	159
TPS6518	159
TPS6519	159
TPS6520	123AP
TPS6521	123AP
TPS6522	159
TPS6523	159
TPYTD03002	2360
TQ1	108
TQ2	108
TQ3	108
TQ4	123AP
TQ5	108
TQ6	108
TQ7	108
TQ8	108
TQ9	108
TQ53	193
TQ54	193
TQ55	193
TQ56	294
TQ57	193
TQ58	193
TQ59	193
TQ59A	193
TQ60	193
TQ60A	193
TQ61	159
TQ61A	159
TQ62	159
TQ62A	159
TQ63	129
TQ63A	129
TQ64	129
TQ64A	129
TQ11104LT40	5646
TQ1106LT40	5646
TQ1108LT40	5646
TQ1110LT40	5646
TQ1112LT40	5646
TQ2204LT40	5646
TQ2206LT40	5646
TQ2208LT40	5646
TQ2210LT40	5646
TQ2212LT40	5646
TQ3804LT40	5646
TQ3806LT40	5646
TQ3808LT40	5646
TQ3810LT40	5646
TQ3812LT40	5646
TQ5020	100
TQ5020(SANYO)	113A
TQ5021	160
TQ5022	160
TQ5023	102A
TQ5025	102A
TQ5026	102A
TQ5027	102
TQ5028	127
TQ5030	179
TQ5031	101
TQ5032	101
TQ5034	160
TQ5035	160
TQ5036	121
TQ5038	160
TQ5039	101
TQ5044	103A
TQ5049	108
TQ5050	103A
TQ5051	102A
TQ5052	123AP
TQ5053	123AP
TQ5054	123AP
TQ5055	128
TQ5060	123AP
TQ5061	102A
TQ5062	103A
TQ5063	154
TQ5064	121
TQ5081	128
TQ7037	1004
TQ7038	1004
TQ-63	159
TQ-64	159
TQ-5032(NPN)	103A
TQ-5032(PNP)	102A
TQ-5034	160
TQ-5044(NPN)	103A
TQ-5044(PNP)	102A
TQ-5050(NPN)	103A
TQ-5050(PNP)	102A
TQ-5051	158
TQ-5052	123AP
TQ-5053	123AP
TQ-5054	123AP
TQ-5055	128
TQ-5060	123AP
TQ-5061	158
TQ-5062(NPN	103A
TQ-5062(PNP)	102A
TQ-5063	171
TQ-5064	121
TQ-PD-3055	130
TQPD3053	128
TQSA0-222	102
TR08003	222
TR08004	222
TR09005	703
TR09006	703
TR09010	746
TR02020-2	234
TR01040	199
TR02060-7	180
TR01060-7	181
TR010602-1	108
TR06011	132
TR02012	126
TR09012	703
TR01014	199
TR06014	132
TR01015	199
TR09017	722
TR09018	788
TR09019	801
TR01026	108
TR09027	801
TR09029	708
TR09032	799
TR01037	123AP
TR01042	161
TR01045	182
TR02051-1	159
TR02051-3	159
TR02051-5	159
TR01051-5	81
TR02051-6	159
TR01051-7	81
TR01053-1	159
TR01053-5	123AP
TR02053-5	189
TR02053-7	189
TR0105305	123AP
TR01054-1	123AP
TR02054-1	159
TR01054-5	123A
TR01054-7	128
TR02054-7	129
TR0055	159
TR01056-5	182
TR01057-1	182
TR01057-3	184
TR02057-3	185
TR01058-5	182
TR02058-5	183
TR01062-1	128
TR02062-1	159
TR02062-6	159
TR01062-7	123A
TR02063-1	126
TR01063-5	123AP
TR02063-5	159
TR02063-8	159
TR02064-5	248
TR01064-5	247
TR01065	103A
TR01073	123AP
TR01074	229
TR00254	5818
TR00254-1	5818
TR00254-1R	5819
TR00254-2	5818
TR00254-2R	5819
TR00254-3	5820
TR0575002	109
TR0575005	109
TR0-1057-1	182
TR0-1057-3	182
TR0-1057-4	182
TR0-1058-1	182
TR0-1058-5	182
TR0-1064-5	247
TR0-1064-6	247
TR0-1064-7	247
TR0-1064-8	247
TR0-2012	160
TR0-2028-5	183
TR0-2057-1	183
TR0-2057-3	183
TR0-2057-4	183
TR0-2058-1	183
TR0-2058-5	183
TR0-2064-5	248
TR0-2064-6	248
TR0-2064-7	248
TR0-2064-8	248
TR0-9005	703
TR0-9006	703
TR0-9010	746
TR0-9017	722
TR0-9018	788
TR01	104
TR01C	121
TR01MP	104
TR02	121
TR02C	121
TR03	105
TR03C	105
TR04	102
TR04C	102A
TR05	102
TR05C	100
TR06	160
TR06C	160
TR07	160
TR07C	100
TR08	103
TR08C	101
TR09	103
TR09C	101
TR0259-6	219
TR0573486	229
TR0573491	123AP
TR0573507	229
TR1AC	5633
TR1N4002	116
TR1R26	160
TR2A	116
TR2N990	160
TR2N2148	121
TR2N2614	102A
TR2N2614C	102A
TR2N2924	289A
TR2N2925-18	123A
TR2N3588	160
TR2N3588-3	160
TR2N3638A-3	159
TR2N4079	155&131
TR2N4248	159
TR2N5163	312
TR2N5163A	312
TR2N5163B	312
TR2R26	160
TR2S1570LH	199
TR2SA763	234
TR2SC371	107
TR2SC372	289
TR2SC373	123AP
TR2SC384	107
TR2SC482	128
TR2SC535	107
TR2SC671	195A
TR2SC735	123AP
TR2SC1342	229
TR2SC3677	123AP
TR2SD330E	152
TR2SK55	312
TR3R26	160
TR4R26	160
TR4S	5008A
TR5R26	102
TR5S	5010A
TR6R26	102
TR6S	5070A
TR7SA	5014A
TR7SB	5071A
TR9S	139A
TR9SA	5016A
TR9SB	139A
TR10	101
TR10C	101
TR11	100
TR11C	160
TR12	160
TR12C	160
TR12S	5022A
TR12SA	5021A
TR12SB	5022A
TR12SC	5023A
TR13	160
TR13C	160
TR14	102A
TR14C	102A
TR15	102A
TR15C	102A
TR16	127
TR16C	121
TR17	160
TR18	160
TR18C	160
TR19(AUDIOTRONICS)	152
TR19A	199
TR 19A	199
TR20	159
TR21	123AP
TR21C	108
TR22	129
TR22A	129
TR22C	108
TR23	128
TR23A	129
TR23C	124
TR24	108
TR25	128
TR26	130
TR26-1	175
TR26C	130
TR27	127
TR28	159
TR29	219
TR30	159
TR31	159
TR32	194
TR33	199
TR34	127
TR35	179
TR36	181
TR37	218
TR38	108
TR43	102A
TR44	102A
TR45	102A
TR48	109
TR50	131
TR51	160
TR52	160
TR53	100
TR54	102A
TR55	100
TR56	104
TR57	105
TR59	130
TR61	162
TR62	160
TR63	126
TR64	100
TR65	100
TR67	165
TR68	162
TR69	172A
TR70	229
TR71	102A
TR72	102A
TR76	184
TR77	160
TR79	171
TR80	108
TR81	102A
TR82	176
TR83	108
TR84	158
TR85	158
TR86	123AP
TR87	160
TR88	160
TR93	165
TR100	5982
TR104	100
TR105(SPRAGUE)	199
TR106(SPRAGUE)	234
TR109	100
TR112	108
TR116B	5641
TR116D	5642
TR116M	5643
TR125B	145A
TR139	160
TR150	5896
TR151	5944
TR152	5986
TR153	5990
TR160A	56014
TR160B	56014
TR160C	56014
TR160D	56014
TR167	101
TR182	101
TR183	101
TR184	101
TR193	101
TR194	101
TR200	5986
TR203	5990
TR209T2	5073A
TR211	101
TR212	101
TR213	101
TR214	101
TR215	100
TR216	101
TR217	100
TR218	160
TR251	5990
TR252	5988
TR253	5990
TR262-2	124
TR266-2	124
TR271TR26	130
TR300	5990
TR301	154
TR302	123AP
TR303	5990
TR320	102
TR320A	102
TR320AN	102A
TR321	102
TR321(HFGH1)	100
TR321A	102
TR323	102
TR323A	102
TR323AN	102A
TR331	160
TR332	102
TR333	121
TR334	105
TR335	101
TR336	101
TR337	101
TR338	103
TR351	5990
TR352	5990
TR353	5990
TR381	158
TR382	158
TR383	158
TR383(HGFH-2)	102
TR400	5990
TR401	5990
TR402	5990
TR403	5990
TR482	100
TR482A	100
TR501	5952
TR502	5992
TR508	102
TR508A	102
TR508AN	102A
TR601	123AP
TR602	5994
TR650	102
TR650A	102A
TR653	102
TR653A	102A
TR702	375
TR721	102
TR721A	102A
TR722	102
TR722A	102A
TR758A	100
TR759	100
TR760	126
TR761	126
TR762	126
TR763	102

PART NUMBER	NTE REPLACEMENT
TR763A	102A
TR764	100
TR792	100
TR801	100
TR802	100
TR1000	129
TR1000A	159
TR1001	128
TR1001-2	194
TR1002	129
TR1003	128
TR1004	129
TR1005	128
TR1007	130
TR1009	162
TR1009A	181
TR1011	123AP
TR1012	129
TR1015	123AP
TR1015-2	123AP
TR1030	159
TR1030-1	159
TR1030-2	159
TR1030A	159
TR1031	123AP
TR1031-1	194
TR1031-2	194
TR1032	159
TR1032-1	159
TR1032-2	129
TR1032-3	129
TR1032-4	129
TR1032-5	129
TR1032A	159
TR1033	123AP
TR1033-1	190
TR1033-2	128
TR1033-3	190
TR1033-4	190
TR1033-5	190
TR1033-6	190
TR1034	159
TR1034-3	159
TR1034-4	159
TR1034-5	159
TR1034A	159
TR1035-3	81
TR1035-4	81
TR1035-5	81
TR1036	179
TR1036-2	183
TR1036-3	183
TR1037-1	183
TR1037-2	182
TR1037-3	182
TR1038	179
TR1038-4	219
TR1038-5	183
TR1038-6	183
TR1039-4	130
TR1039-5	179
TR1039-6	130
TR1073	229
TR1077	130
TR1116A	5640
TR1120	5870
TR1121	5872
TR1122	5874
TR1123	5878
TR1124	5878
TR1125	5882
TR1126	5882
TR1128	5886
TR1130	5890
TR1490	130
TR1491	130
TR1492	130
TR1493	130
TR1512-80	108
TR1591	175
TR1593	175
TR1605LP	124
TR1993-2	123AP
TR2083-40	614
TR2083-41	109
TR2083-42	177
TR2083-44	177
TR2083-70	312
TR2083-71	123AP
TR2083-72	123AP
TR2083-73	123AP
TR2083-74	161
TR2083-75	102
TR2417	2083
TR2880	116
TR4010	199
TR4010-2	123AP
TR4083-23273	1039
TR4083-2327311	1039
TR4083-2327312	1039
TR4104-2327411	1041
TR5528	132
TR8001	160
TR8002	160
TR8003	160
TR8004	108
TR8004-4	123AP
TR8005	124
TR8006	121
TR8007	102
TR8007A	159
TR8010	123AP
TR8014	123AP
TR8018	181
TR8019	153
TR8020	159
TR8021	123AP
TR8022	190
TR8023	190
TR8024	190
TR8025	123AP
TR8026A	159
TR8028	123AP
TR8029	123AP
TR8030	123AP
TR8031	123AP
TR8034	123AP
TR8035	123AP
TR8036	128
TR8037	129
TR8038	123AP
TR8039	123AP
TR8040	123AP
TR8042	108
TR8043	123AP
TR8055	159
TR8330	123AP
TR9100	123AP
TR12001-4	109
TR13006-2	177
TR14001-1	5081A
TR14002-2	145A
TR14002-6	142A
TR14002-12	145A
TR14002-13	5079A
TR35144	121
TR35144A	121
TR35524	121
TR36642	130
TR36642D	130
TR36643	128
TR38117	102A
TR39453	221
TR40245-1	161
TR40245-2	161
TR40245-3	161
TR40603	221
TR40604	222
TR80073	704
TR310011	102A
TR310012	102A
TR310015	100
TR310017	102A
TR310018	102A
TR310019	160
TR310025	160
TR310026	102A
TR310065	160
TR310068	160
TR310069	160
TR310075	102A
TR310107	102A
TR310123	160
TR310124	160
TR310125	102A
TR310136	102A
TR310139	160
TR310147	160
TR310149	102A
TR310150	160
TR310153	102A
TR310155	160
TR310156	160
TR310157	160
TR310158	160
TR310159	102A
TR310160	103A
TR310161	100
TR310164	102A
TR310193	160
TR310224	160
TR310225	102
TR310227	102A
TR310230	108
TR310231	123AP
TR310232	160
TR310235	102A
TR310236	103A
TR310243	123AP
TR310244	108
TR310245	123AP
TR310249	108
TR310250	108
TR310251	102A
TR310252	102A
TR310255	102A
TR320007	110MP
TR320008	109
TR320020	116
TR320022	116
TR320039	109
TR320041	109
TR320048	109
TR330027	116
TR330028	140A
TR2320063	123AP
TR2327031	116
TR2327041	116
TR2327203	184
TR2327293	123AP
TR2327312	1072
TR2327333	123AP
TR2327363	123AP
TR2327393	185
TR2327411	1041
TR2327431	222
TR2327443	199
TR2327444	199
TR2327574	181
TR2327603	182
TR2327607	235
TR2327723	153
TR2327733	138A
TR2327743	159
TR2327841	180
TR2327852	175
TR2337011	177
TR2337063	5080A
TR2337103	144A
TR2337123	137A
TR2367161	1124
TR2367171	801
TR3100227	102
TR5320326	108
TR228735045311	108
TR228735046011	107
TR228735048617	108
TR228735048618	108
TR228735120325	132
TR228736002003	109
TR228736002004	110MP
TR228736003026	140A
TR228779905696	1003
TR-01	121
TR-01(PENNCREST)	128
TR-01B	108
TR-01B(PENNCREST)	123AP
TR-01C	121
TR-01C(PENNCREST)	123AP
TR-01E	128
TR-01E(PENNCREST)	128
TR-01MP	104
TR-02	104
TR-02E	116
TR-03	105
TR-03(PENNCREST)	175
TR-04	102A
TR-04C	129
TR-04C(PENNCREST)	129
TR-05	100
TR-06	100
TR-06(PENNCREST)	123AP
TR-07	160
TR-07(PENNCREST)	128
TR-08	101
TR-08(PENNCREST)	129
TR-08C	101
TR-09	101
TR-09C	101
TR-016	108
TR-1R26	160
TR-1R31	108
TR-1R33	123AP
TR-1R35	108
TR-2N2641C	102A
TR-2N2924-18	289A
TR-2R26	160
TR-2R31	108
TR-2R33	108
TR-2R35	108
TR-2SC367	123AP
TR-2SC371	107
TR-2SC372	289
TR-2SC373	123AP
TR-2SC384	107
TR-2SC482	128
TR-2SC735	123AP
TR-3	121
TR-3R26	160
TR-3R31	108
TR-3R33	108
TR-3R35	108
TR-3R38	123AP
TR-3R03	108
TR-4R26	160
TR-4R31	128
TR-4R33	123AP
TR-4R35	108
TR-4R38	159
TR-5	121
TR-5R26	102A
TR-5R31	128
TR-5R33	123AP
TR-5R35	123AP
TR-5R38	123AP
TR-6R26	102A
TR-6R33	123AP
TR-6R35	159
TR-6R35A	159
TR-7GS	138A
TR-7R31	128
TR-7R35	123AP
TR-7SA	138A
TR-7SB	142A
TR-8R35	123AP
TR-9GS	139A
TR-9S	139A
TR-9SA	139A
TR-9SB	139A
TR-10	101
TR-10C	101
TR-11	126
TR-11C	160
TR-12	160
TR-12C	160
TR-13	128
TR-13(RF)	160
TR-13C	160
TR-14	102A
TR-14C	102A
TR-15	102A
TR-15C	102A
TR-16	104
TR-16C	104
TR-17	160
TR-17A	160
TR-17C	160
TR-18	160
TR-18C	160
TR-19	159
TR-19A	159
TR-20	159
TR-20A	159
TR-21	123AP
TR-21-6	123AP
TR-21C	123AP
TR-22	123AP
TR-22C	123AP
TR-23	124
TR-23C	124
TR-24	108
TR-24(PHILCO)	123AP
TR-25	128
TR-26	130
TR-27	127
TR-28	129
TR-29	219
TR-30	159
TR-30A	159
TR-31	159
TR-31B	128
TR-32	194
TR-33	293
TR-34	127
TR-35	179
TR-36	181
TR-36MP	181
TR-37	218
TR-43B	121
TR-50	131
TR-51	123AP
TR-52	294
TR-53	128
TR-54	294
TR-55	186
TR-56	187
TR-57	175
TR-59	130
TR-61	162
TR-61MP	162
TR-62	123AP
TR-63	224
TR-64	224
TR-65	195A
TR-67	163A
TR-68	165
TR-69	172A
TR-70	229
TR-72	190
TR-74	190
TR-75	142A
TR-76	152
TR-77	116
TR-77(XSTR)	185
TR-79	171
TR-80	108
TR-81	175
TR-81MP	175
TR-82	176
TR-83	108
TR-84	158
TR-85	158
TR-86	123AP
TR-87	128
TR-88	129
TR-93	165
TR-95	139A
TR-95(B)	139A
TR-95(TRANS)	161
TR-95B	139A
TR-157(OLSON)	158
TR-158(OLSON)	158
TR-159(OLSON)	101
TR-160(OLSON)	101
TR-161(OLSON)	160
TR-162(OLSON)	123AP
TR-163(OLSON)	108
TR-164(OLSON)	128
TR-165(OLSON)	129
TR-166(OLSON)	160
TR-167(OLSON)	159
TR-168(OLSON)	126
TR-169(OLSON)	102A
TR-170(OLSON)	158
TR-171	161
TR-172(OLSON)	104
TR-174(OLSON)	105
TR-175(OLSON)	124
TR-176(OLSON)	181
TR-178(OLSON)	121
TR-180(OLSON)	175
TR-182(OLSON)	185
TR-183(OLSON)	127
TR-184(OLSON)	131
TR-185(OLSON)	150A
TR-186(OLSON)	162
TR-187(OLSON)	163A
TR-188(OLSON)	175
TR-320	102A
TR-320A	102A
TR-321	102A
TR-321A	102A
TR-323A	102A
TR-482A	102A
TR-508A	102A
TR-1000-2	159
TR-1000-3	128
TR-1000-7	130
TR-1030-1	159
TR-1030-2	159
TR-1032-1	106
TR-1032-2	159
TR-1033-1	123AP
TR-1033-2	123AP
TR-1033-3	123AP
TR-1036-1	183
TR-1036-2	183
TR-1036-3	187
TR-1037-1	182
TR-1037-2	182
TR-1037-3	186
TR-1038-4	180
TR-1039-4	130
TR-1347	123AP
TR-1993	199
TR-2880	116
TR-8001	160
TR-8002	160
TR-8003	160
TR-8004	123AP
TR-8004-4	108
TR-8004-5	108
TR-8005	124
TR-8006	121
TR-8007	159
TR-8007(FISHER)	159
TR-8010	107
TR-8014	123AP
TR-8018	181
TR-8019	153
TR-8020	129
TR-8021	128
TR-8022	190
TR-8023	128
TR-8024	128
TR-8025	123AP
TR-8026	159
TR-8027	132
TR-8028	108
TR-8029	108
TR-8030	108
TR-8031	108
TR-8032	108
TR-8034	199
TR-8035	123AP
TR-8036	128
TR-8037	159
TR-8038	108
TR-8039	123AP
TR-8040	199
TR-8042	123AP
TR-8043	107
TR-9100-18	123AP
TR-14001-2	5130A
TR-14001-4	5135A
TR-14002-10	147A
TR-36643A	128
TR-A415	108
TR-BC107B	123A
TR-BC109B	123A
TR-BC147B	123AP
TR-BC149C	199
TR-BF115	108
TR-BF184	161
TR-BRC149C	123AP
TR-C44	100
TR-C44A	100
TR-C45	102A
TR-C45A	100
TR-C70	102A
TR-C71	102A
TR-C72	102A
TR-C72(DIODE)	178MP
TR-DTG110	121
TR-DTG110B	121
TR-F1462	312
TR-F1463	312
TR-FET-1	132
TR-FE100	312
TR-MPF106	451
TR-RR38	123AP
TR-SK3730	290A
TR-TR38	123AP
TR-U1650E	132
TR-U1650E-1	312
TR-U1835E	132
TRA4	123AP
TRA4A	123AP
TRA4B	123AP
TRA7R	121
TRA8R	121
TRA9R	123AP
TRA10R	160
TRA11R	160
TRA12R	160
TRA22A	160
TRA22B	160
TRA23	160
TRA23A	160
TRA23B	160
TRA24	160
TRA24A	160
TRA24C	160
TRA32	102A
TRA33	102A
TRA34	123AP
TRA36	123AP
TRA-2	126
TRA-4	123AP
TRA-4A	123AP
TRA-4B	123AP
TRA-7R	121
TRA-7RM	121
TRA-8R	121
TRA-9R	123AP
TRA-10R	126
TRA-11R	126
TRA-12R	126
TRA-22	126
TRA-22A	126
TRA-22B	126
TRA-23	126
TRA-23A	126
TRA-23B	126
TRA-24	126
TRA-24A	126
TRA-24B	126
TRA-32	102A
TRA-33	102A
TRA-34	123AP
TRA-36	123AP
TRAPLC711	123AP
TRAPLC871	123AP
TRAPLC871A	123AP
TRAPLC1013	186
TRBC147B	123AP
TRC44	100
TRC44A	100
TRC45	100
TRC45A	100
TRC70	102
TRC71	102
TRC72	102
TRC-P4	113A
TRID(TP)	552
TRLA3350	1217
TRM13	160
TRM14	160
TRM15	100
TRM16	126
TRM17	126
TRM21	100
TRM81	160
TRMBC149B	123AP
TRN2654	160
TRO31	176
TRO1026	123AP
TRO1027	229
TRO1037	199
TRO1042	161
TRO1053-1	106
TRO1054-1	128
TRO1054-7	128
TRO2012	160
TRO2051-1	106
TRO2054-1	129
TRO2062-1	106
TRO6011	312
TRO9005	703
TRO9006	703
TRO9012	703
TRO10602-1	123AP
TRO-9005	703
TRO-9006	703
TRPLC711	199
TRR6	137A
TRS25X	198
TRS30X	198
TRS35X	198
TRS100	154
TRS100A	287
TRS101	154
TRS120	154
TRS140	154
TRS140HP	171
TRS140MP	198
TRS160	154
TRS160HP	171
TRS160MP	198
TRS180	154
TRS180HP	171
TRS180MP	198
TRS200	154
TRS200HP	171
TRS200MP	198
TRS225	154
TRS225HP	171
TRS225MP	198
TRS250	154
TRS250HP	171
TRS250MP	198
TRS275	154
TRS275HP	171
TRS275MP	198
TRS301	154
TRS301HF	171
TRS301HP	171
TRS301LC	198
TRS301MP	198
TRS325	287
TRS325HP	171
TRS325MP	198
TRS350	198
TRS350HP	198
TRS350MP	198
TRS375	198
TRS375HP	198
TRS375MP	198
TRS401	198
TRS401HP	198
TRS401LC	198
TRS401MP	198
TRS425	198
TRS425HP	198
TRS425MP	198
TRS450	198
TRS451	198
TRS451MP	198
TRS475	198
TRS475MP	198
TRS501	198
TRS501LC	198
TRS501MP	198
TRS525	198
TRS525MP	198
TRS550	198
TRS550MP	198
TRS1004	190
TRS1004LP	190
TRS1005	124
TRS1005LP	124
TRS1204	198
TRS1204LP	190
TRS1205	124
TRS1205LP	124
TRS1404	198
TRS1404LP	190
TRS1405	124
TRS1405LP	124
TRS1604	198
TRS1604LP	190
TRS1605	124
TRS1605LP	190
TRS1804	198
TRS1804LP	190
TRS1805	124
TRS1805LP	124
TRS2004	198
TRS2004LP	198
TRS2005	124
TRS2005LP	124
TRS2006	198
TRS2254	198
TRS2254LP	198
TRS2255	124
TRS2255LP	124
TRS2504	198
TRS2504LP	198
TRS2505	124
TRS2505LP	124
TRS2754	198
TRS2754LP	198
TRS2755	124
TRS2755LP	124
TRS2804S	198
TRS2805S	198
TRS3006	198
TRS3011	154
TRS3012	154
TRS3014	171
TRS3014LP	198
TRS3015	198
TRS3015LP	124
TRS3016LC	124
TRS3204S	198
TRS3205S	198
TRS3254	198
TRS3254LP	198
TRS3255	198
TRS3504	198
TRS3504LP	198
TRS3604S	198
TRS3742	198
TRS3754	198
TRS3754LP	198
TRS4004	198
TRS4014	396
TRS4014LP	198
TRS4014S	198
TRS4016LC	124
TRS4254	198
TRS4254LP	198
TRS4404S	198
TRS4504	198
TRS4504LP	198
TRS4754	198
TRS4754LP	198
TRS4926	198
TRS4927	198
TRS5014	198
TRS5016LC	124
TRS5254	198
TRS5504	198
TRS6016LC	124
TRSR3AM	125
TRV1G	177
TS05	116
TS1	116
TS2	116
TS2A	116
TS3	125
TS4	5804
TS5	116
TS6	116
TS8	125
TS13	102
TS14	102
TS15	102
TS67BB	176
TS97-1	159
TS162	158
TS163	158
TS164	158
TS165	158
TS166	158
TS173	121
TS176	121
TS601	158

PART NUMBER	NTE REPLACEMENT
TS602	158
TS603	158
TS604	158
TS609	105
TS610	121
TS612	121
TS613	121
TS614	121
TS615	100
TS616	158
TS617	158
TS618	158
TS619	158
TS620	158
TS621	158
TS627	158
TS627A	102
TS627B	102
TS629	158
TS630	160
TS669A	100
TS669B	100
TS669C	160
TS669D	100
TS669E	100
TS669F	100
TS672A	102
TS672B	160
TS673A	160
TS673B	160
TS739	158
TS739B	158
TS740	158
TS765	158
TS1007	158
TS1266	158
TS1541	176
TS1657	121
TS1727	158
TS1728	158
TS1792	102A
TS2218	192
TS2219	192
TS2221	123AP
TS2222	123AP
TS2776	154
TS2904	159
TS2905	159
TS2906	159
TS2907	159
TS4078BP	4078B
TS9013	108
TS-1	102A
TS-2	102A
TS-2A	116
TS-3	102A
TS-13	102A
TS-14	102A
TS-15	102A
TS-162	102A
TS-163	102A
TS-164	102
TS-165	102A
TS-166	102A
TS-173	121
TS-176	121
TS-337	142A
TS-601	100
TS-602	100
TS-603	102A
TS-604	102A
TS-609	105
TS-610	104
TS-612	104
TS-613	104
TS-614	104
TS-615	160
TS-616	102A
TS-617	102A
TS-618	102A
TS-620	160
TS-621	160
TS-627	102A
TS-627A	160
TS-627B	160
TS-629	102A
TS-630	160
TS-672A	160
TS-672B	160
TS-673A	160
TS-673B	160
TS-739	102A
TS-739B	102A
TS-740	102A
TS-765	102A
TS-1007	102A
TS-1193-736	130
TS-1266	102A
TS-1657	121
TS-1727	102A
TS-1728	102A
TS-21756640	159
TSB245	116
TSB3055	390
TSB-245	116
TSB-1000	116
TSC136	177
TSC159	116
TSC499	123AP
TSC614	108
TSC695	123AP
TSC722	128
TSC767	199
TSC1685TAQR	85
TSC7106	2051
TSC7106CPL	2051
TSC7106PL	2051
TSC7107	2050
TSC8002	128
TSC8002-38	123AP
TSC9002	129
TSC-499	199
TSC-722	128
TSF11	587
TSF12	587
TSF13	587
TSF14	587
TSF31	588
TSF32	588
TSF33	588
TSF34	588
TSF56	577
TSR120	585
TSR130	585
TSR140	585
TSR320	586
TSR330	586
TSR340	586
TST705899A	123AP
TSTD-15	506
TSUS5401	3027
TSV-1000	116
TT2SA495	290A
TT2SA495-0	159
TT2SA495-0-A	159
TT2SA495-0-A	159
TT2SA495-Y	159
TT2SA495-Y-A	159
TT2SA495Y	290A
TT2SA817(Y)	298
TT2SA817Y	298
TT2SA965Y	383
TT2SA1015	290A
TT2SA1015G	290A
TT2SA9500	290A
TT2SC496Y	295
TT2SC983	171
TT2SC983-0-A	198
TT2SC983-O-A	171
TT2SC983-R-A	198
TT2SC983-Y-A	198
TT2SC1627(Y)	289A
TT2SC1627Y	289A
TT2SC1815	85
TT2SC1815G	85
TT2SC2458G	85
TT2SC22360	293
TT2SD843Y	377
TT32N400C0	5710
TT32N400K0C	5710
TT32N600C0	5710
TT32N600K0C	5710
TT32N800C0	5710
TT32N800K0C	5710
TT32N1100C0	5710
TT32N1100K0C	5710
TT32N1200C0	5710
TT32N1200K0C	5710
TT45N400C0	5710
TT45N400K0C	5710
TT45N600C0	5710
TT45N600K0C	5710
TT45N800C0	5710
TT45N800K0C	5710
TT45N1100C0	5710
TT45N1100K0C	5710
TT45N1200C0	5710
TT45N1200K0C	5710
TT60N400C0	5710
TT60N400K0C	5710
TT60N600C0	5710
TT60N600K0C	5710
TT60N800C0	5710
TT60N800K0C	5710
TT60N1100C0	5710
TT60N1100K0C	5710
TT60N1200C0	5710
TT60N1200K0C	5710
TT60N1200K0F	5710
TT66X26	116
TT75N400C0	5720
TT75N400K0C	5720
TT75N600C0	5720
TT75N600K0C	5720
TT75N800C0	5720
TT75N800K0C	5720
TT75N1100C0	5720
TT75N1100K0C	5720
TT75N1200C0	5720
TT75N1200K0C	5720
TT95N400C0	5720
TT95N400K0C	5720
TT95N600C0	5720
TT95N600K0C	5720
TT95N800C0	5720
TT95N800K0C	5720
TT95N1100C0	5720
TT95N1100K0C	5720
TT95N1200C0	5720
TT95N1200K0C	5720
TT204	108
TT204A	108
TT204AB	108
TT204B	108
TT204C	108
TT1083	121
TT1097	123AP
TT-204	108
TT-204A	108
TT-204AB	108
TT-204B	108
TT-204C	108
TT-1083	121
TT-1097	123AP
TTBA120S-3	1292
TTT-2SC1000GBL	199
TTVM-HS20/1B	505
TU000	158
TU400	5329
TU401	5329
TU402	5329
TU404	5330
TU406	5330
TU408	5331
TU410	5331
TU600	5329
TU601	5329
TU602	5329
TU604	5330
TU606	5330
TU606-B	5330
TU606B	5330
TU608	5331
TU610	5331
TU74141N	74141
TUF501	576
TUF502	576
TUF503	576
TUF504	576
TUF505	576
TUF506	577
TUF507	577
TUF508	577
TUR1G	552
TURID	552
TUS34	132
TUS-185D	116
TV2S1202	116
TV2SB126	127
TV2SB126F	121
TV2SB126V	127
TV2SB448	127
TV2SC208	123AP
TV2SC1505	198
TV2SC1507	198
TV4	116
TV6.5	118
TV8	125
TV13-12K60	503
TV13-S	503
TV15	161
TV15A	161
TV15B	161
TV15C	161
TV16	108
TV17	123AP
TV17A	108
TV18	108
TV18-S	504
TV18B	123AP
TV19	154
TV20	161
TV20-10K80	505
TV20-S	505
TV21	192
TV22	191
TV23	128
TV25	128
TV26	192
TV27	103
TV28	192
TV29	129
TV32	108
TV33	161
TV34	506
TV35	161
TV36	123AP
TV37	319P
TV38	123AP
TV39	123AP
TV40	123AP
TV41	128
TV42	128
TV43	123AP
TV44	159
TV45	128
TV46	123AP
TV47	158
TV48	123AP
TV49	191
TV50	161
TV51	128
TV52	128
TV53	128
TV54	161
TV55	108
TV56	123AP
TV57	107
TV57A	123AP
TV58	107
TV58A	123AP
TV59	128
TV59A	123AP
TV60	107
TV60A	123AP
TV61	158
TV62	172A
TV62(PHILCO)	172A
TV65	123AP
TV70	154
TV71	123AP
TV72	159
TV73	210
TV75	210
TV80	132
TV81	233
TV83	312
TV85	171
TV92	123AP
TV106	127
TV108	163A
TV109	175
TV110	281
TV111	127
TV112	196
TV113	124
TV114	127
TV115	108
TV116	197
TV117	196
TV118	163A
TV121	162
TV122	124
TV124	165
TV125	163A
TV215	513
TV411	127
TV695	118
TV1000	108
TV2403	108
TV2404	108
TV2419	116
TV2428	102A
TV2429	102A
TV2434	102A
TV2455	160
TV2479	160
TV2496	116
TV4152	100
TV6080	128
TV24102	108
TV24103	112
TV24103A	112
TV24103B	112
TV24103C	112
TV24103D	112
TV24104	116
TV24115	102A
TV24122	110MP
TV24125	116
TV24130	112
TV24136	116
TV24137	160
TV24142	127
TV24143	103A
TV24148	108
TV24152	100
TV24154	102A
TV24155	116
TV24156	102A
TV24157	126
TV24158	160
TV24159	112
TV24160	161
TV24161	161
TV24162	127
TV24163	127
TV24164	154
TV24166	160
TV24167	506
TV24169	506
TV24172	160
TV24182	112
TV24189	102A
TV24190	113A
TV24191	116
TV24193	116
TV24194	102A
TV24200	116
TV24203	108
TV24204	108
TV24209	161
TV24210	107
TV24211	175
TV24214	159
TV24214A	159
TV24215	123AP
TV24216	123AP
TV24217	506
TV24219	506
TV24221	125
TV24222	116
TV24224	116
TV24225	156
TV24226	113A
TV24229	160
TV24230	160
TV24232	116
TV24234	116
TV24237	120
TV24239	160
TV24266	116
TV24272	138A
TV24273	110MP
TV24278	116
TV24281	123AP
TV24282	116
TV24283	116
TV24285	166
TV24292	116
TV24298	116
TV24313	108
TV24337	121
TV24341	127
TV24351	160
TV24363	159
TV24363A	159
TV24370	102A
TV24372	123AP
TV24380	107
TV24382	107
TV24383	107
TV24385	107
TV24387	108
TV24399	161
TV24435	154
TV24436	161
TV24437	161
TV24438	107
TV24453	123AP
TV24454	123AP
TV24458	123AP
TV24468	127
TV24487	175
TV24495	159
TV24495A	159
TV24499	154
TV24540	503
TV24554	177
TV24568	127
TV24571	161
TV24573	108
TV24574	108
TV24576	123AP
TV24582	116
TV24586	116
TV24589	108
TV24599	102A
TV24617	506
TV24648	506
TV24649	174
TV24650	503
TV24651	5800
TV24655	123AP
TV24678	121
TV24681	174
TV24684	108
TV24803	116
TV24806	107
TV24848	106
TV24941	116
TV24942	125
TV24945	102A
TV24979	116
TV24981	5071A
TV24983	103A
TV24984	102A
TV24985	115
TV24987	113A
TV34232	116
TV241013	110MP
TV241072	1004
TV241073	116
TV241074	116
TV241077	123AP
TV241078	123AP
TV-6	123AP
TV-7	108
TV-15	108
TV-15A	161
TV-15B	108
TV-16	161
TV-17	123AP
TV-18	123AP
TV-19	154
TV-20	233
TV-21	123AP
TV-22	108
TV-23	123AP
TV-25	191
TV-26	128
TV-27	103A
TV-28	128
TV-29	129
TV-32	108
TV-33	319P
TV-34	319P
TV-35	319P
TV-36	161
TV-37	161
TV-38	161
TV-39	161
TV-40	123AP
TV-41	128
TV-42	123AP
TV-43	128
TV-44	159
TV-45	128
TV-46	123AP
TV-47	159
TV-47A	159
TV-48	229
TV-49	154
TV-50	319P
TV-51	123AP
TV-52	123AP
TV-53	123AP
TV-54	233
TV-55	233
TV-56	123AP
TV-57	159
TV-58	123AP
TV-59	128
TV-60	123AP
TV-61	102
TV-61A	102A
TV-62	123AP
TV-65	123AP
TV-66	123AP
TV-67	128
TV-68	123AP
TV-70	154
TV-70B	128
TV-71	106
TV-73	186
TV-74	187
TV-75	186
TV-77	233
TV-82	186
TV-83	132
TV-84	123AP
TV-85	171
TV-87	159
TV-92	123AP
TV-93	159
TV-109	175
TV-112	196
TV-114	127
TV-115	152
TV-116	153
TV-117	152
TV-118	165
TV-119	165
TV-120	157
TV-121	164
TV-124	165
TV-125	165
TV-215	513
TV-2496	116
TV-24104	116
TV-24125	116
TV-24191	116
TV-24232	116
TV-24237	120
TV-24266	116
TV-24272	138A
TV-24399	161
TVC3	120
TVC6	120
TVC-3	116
TVC-6	120
TVCM-S	709
TVCM-4	708
TVCM-5	709
TVCM-8	714
TVCM-10	722
TVCM-11	712
TVCM-13	721
TVCM-15	731
TVCM-16	723
TVCM-18	737
TVCM-19	744
TVCM-20	736
TVCM-27	738
TVCM-28	742
TVCM-29	743
TVCM-30	783
TVCM-31	780
TVCM-34	190
TVCM-35	740A
TVCM-39	788
TVCM-42	749
TVCM-43	725
TVCM-44	703
TVCM-45	726
TVCM-46	704
TVCM-47	784
TVCM-53	711
TVCM-54	727
TVCM-55	730
TVCM-57	787
TVCM-58	789
TVCM-59	746
TVCM-60	1142
TVCM-66	912
TVCM-67	917
TVCM-81	1155
TVCM-82	1052
TVCM-502	7474
TVCM-503	7447
TVCM-505	7490
TVCM-551	224
TVD-2D	552
TVDS1M	116
TVH538	113A
TVM7K705M	113A
TVM35	116
TVM56	116
TVM153	522
TVM504A	504
TVM511	116
TVM529	166
TVM531	503
TVM533	503
TVM535	506
TVM537	506
TVM538	113A
TVM540	505
TVM546	507
TVM550	116
TVM554	113A
TVM554A	178MP
TVM563	116
TVM569	503
TVM778	500A
TVM-153	522
TVM-511	116
TVM-526	113A
TVM-530	178MP
TVM-538	113A
TVM-778	500A
TVM-EH2C	116
TVM-EH2C11	116
TVM-EH2C11/1+12/1	116
TVM-EH2C11/1	116
TVM-EH2C12/1	116
TVM-HS25/1G	113A
TVM-K-112C	178MP
TVM-K112C	113A
TVM-M204B	116
TVM-PH9D22/1	116
TVM-PH9D522/11	116
TVM-PT6D22/1	166
TVM-TC0.2P11/2	116
TVM-TC0.2P1	507
TVM-TK705M	113A
TVM-TK-705M	113A
TVMHS151B	116
TVMK112C	113A
TVML00.09D1115	116
TVML00.09M1115	116
TVMM204B	116
TVMPH9DZ2/1	116
TVQA213M2	5022A
TVR06D	552
TVR06G	116
TVR06K	552
TVR1B	552
TVR1D	552
TVR1D(TP)	552
TVR1G	552
TVR1G(TP)	552
TVR1J	552
TVR1J(TP)	552
TVR1JTP	552
TVR2D	552
TVR4J	506
TVR4J-TPA2	506
TVR-06B	116
TVR-06D	552
TVR-06G	116
TVR-06G23	116
TVR-06GG23	116
TVR-06K	116
TVR-1	552
TVR-1B	552
TVR-1G	552
TVR-1J	552
TVR-2	552
TVR-2D	552
TVR-2G	552
TVR_2D	552
TVRSU2M	552
TVS010D1	116
TVS0A01-11SE	5020A
TVS0A70	109
TVS0A71	116
TVS0A90	109
TVS0A91	109
TVS1A209C	5018A
TVS1CE2	552
TVS1N741A	142A
TVS1N741H	142A
TVS1N4002	116
TVS1N4148	519
TVS1N4148B	519
TVS1N4148TE	519
TVS1N4148V	519
TVS1N4150	519
TVS1N4150V	177
TVS1N4741	5074A
TVS1N4741A	141A
TVS1P20	116
TVS1P80	125
TVS1R80	558
TVS1S750	112
TVS1S954	519
TVS1S1850	116
TVS1S1906	116
TVS1S1922G	116
TVS1S1926K	112
TVS1S1950	116
TVS1S2076	519
TVS1S2076MC	519
TVS2CS1256HG	193
TVS2P5M	5458
TVS2S1664	274
TVS2SA71B	102
TVS2SA171	102
TVS2SA483	153
TVS2SA543	192
TVS2SA546	129
TVS2SA546B	129
TVS2SA546E	129
TVS2SA546H	129
TVS2SA564	159
TVS2SA564-0	159
TVS2SA564A	159
TVS2SA564C	159
TVS2SA564P	159
TVS2SA564PY	159
TVS2SA564Q	159
TVS2SA607	159
TVS2SA609	159
TVS2SB126	121
TVS2SB126V	127
TVS2SB171	158
TVS2SB171A	102A
TVS2SB171B	102A
TVS2SB172	158
TVS2SB172A	102
TVS2SB324	102A
TVS2SB449	121
TVS2SB449(F)	104
TVS2SB449F	127
TVS2SB546	292
TVS2SC58A	123AP
TVS2SC288A	108
TVS2SC466	108

PART NUMBER	NTE REPLACEMENT
TVS2SC520	198
TVS2SC538	108
TVS2SC538A	123AP
TVS2SC562	161
TVS2SC563	161
TVS2SC564	159
TVS2SC564-3	159
TVS2SC564-0	159
TVS2SC564O	159
TVS2SC564R	159
TVS2SC644	123AP
TVS2SC645	108
TVS2SC645A	108
TVS2SC645B	123AP
TVS2SC645C	108
TVS2SC647	130
TVS2SC647-0	165
TVS2SC647-P	165
TVS2SC647A	101
TVS2SC647B	165
TVS2SC647C	165
TVS2SC647D	165
TVS2SC647E	165
TVS2SC647Q	165
TVS2SC647R	165
TVS2SC683	108
TVS2SC684	123AP
TVS2SC696	128
TVS2SC762	108
TVS2SC828	123AP
TVS2SC828(Q)	123AP
TVS2SC828A	123AP
TVS2SC828P	123AP
TVS2SC828Q	108
TVS2SC828R	123AP
TVS2SC829(B)	123AP
TVS2SC829B	107
TVS2SC1505	198
TVS2SC1505-1	198
TVS2SC1507	198
TVS2SC1520	198
TVS2SC1633P	375
TVS2SC1683P	375
TVS2SC1875Q	389
TVS2SC1875R	389
TVS2SD749P	182
TVS2SD749Q	182
TVS2SD794	184
TVS2SD794-2	184
TVS2SD794P	184
TVS2SD794Q	184
TVS2SD950	389
TVS2SD950-Q	389
TVS2SD950Q	389
TVS3DL2	552
TVS6.2EB	5013T1
TVS10D1	116
TVS10D2	552
TVS10E	116
TVS10E1	116
TVS10E2	116
TVS10E4	552
TVS25D79	182
TVS25D794	182
TVS30D1	156
TVS340M	5554
TVS415D	519
TVS2406M	552
TVS4150	519
TVS14148	519
TVS81202	116
TVS-0A70	109
TVS-0A81	109
TVS-0A90	109
TVS-0A91	109
TVS-0A95	109
TVS-0V-02	506
TVS-1N82G	112
TVS-1S18	108
TVS-1S750	112
TVS-1S1211	177
TVS-1S1850	116
TVS-1S1893	5800
TVS-1S1906	116
TVS-1S1922	5800
TVS-2B126F	127
TVS-2B-2C	506
TVS-2CS645A	123AP
TVS-2S172F	102
TVS-2S288A	107
TVS-2SA71B	102A
TVS-2SA103	160
TVS-2SA171	100
TVS-2SA385	102A
TVS-2SA385A	102A
TVS-2SA385L	102A
TVS-2SA564	159
TVS-2SA564A	159
TVS-2SA564P	159
TVS-2SB126	121
TVS-2SB126F	121
TVS-2SB126V	127
TVS-2SB171	102A
TVS-2SB171A	158
TVS-2SB172	102A
TVS-2SB172A	100
TVS-2SB172F	102A
TVS-2SB176	102A
TVS-2SB234	102A
TVS-2SB324	158
TVS-2SB448	127
TVS-2SB449F	121
TVS-2SC58	154
TVS-2SC58A	154
TVS-2SC183P	107
TVS-2SC183Q	107
TVS-2SC185A	108
TVS-2SC206	123AP
TVS-2SC208	108
TVS-2SC208A	123AP
TVS-2SC287A	108
TVS-2SC313	161
TVS-2SC429A	107
TVS-2SC446	108
TVS-2SC466	161
TVS-2SC469A	107
TVS-2SC526	154
TVS-2SC538	123AP
TVS-2SC538A	123AP
TVS-2SC562	161
TVS-2SC563	161
TVS-2SC563A	161
TVS-2SC564	159
TVS-2SC582	128
TVS-2SC582A	128
TVS-2SC605	108
TVS-2SC606	108
TVS-2SC644	107
TVS-2SC645	107
TVS-2SC645A	107
TVS-2SC645B	107
TVS-2SC645C	107
TVS-2SC646	181
TVS-2SC683	161
TVS-2SC683V	161
TVS-2SC684	161
TVS-2SC687	162
TVS-2SC762	161
TVS-2SC828	123AP
TVS-2SC828A	123AP
TVS-2SC828Q	123AP
TVS-2SC828P	123AP
TVS-2SC828R	123AP
TVS-2SC829(B)	123AP
TVS-2SC840	175
TVSAQ107R	5014A
TVSB010ZV	116
TVSB0102	116
TVSB0102V	116
TVSB01-02	116
TVSB24-06C	552
TVSB24-06D	552
TVSB28-04D	552
TVSB1201	116
TVSB1202	116
TVSB1202V	116
TVSB1204	125
TVSB2404C	552
TVSB2404D	552
TVSB2406D	506
TVSB2804D	552
TVSB3015M	558
TVSB4302	552
TVSB4304	552
TVSB4304V	552
TVSB81004	5800
TVSBA526	1612
TVSBB2	552
TVSBB2A	552
TVSBB10	552
TVSB0102V	116
TVSC0410	125
TVSC0508	515
TVSC0510	125
TVSC315GM1	984
TVSC2406M	552
TVSC2615A	558
TVSCA3126	797
TVSCA3137	1176
TVSCA3139GM1	1174
TVSCA3139GMI	1174
TVSCA3153	984
TVSCA3153GM1	984
TVSCN5310	1410
TVSCN5311	1410
TVSCO510	125
TVSD8.2EB1	5072A
TVSEM1	116
TVSEM1Z	116
TVSEM1ZV	116
TVSEN1364	1231
TVSEN11235	1550
TVSEN11436	1650
TVSEN11438	986
TVSERB12-01	116
TVSERB12-02	125
TVSERB24-04D	116
TVSERB24-06C	552
TVSERB24-06D	552
TVSERB-04D	552
TVSERC0508	125
TVSERC0510	125
TVSERC0510V	125
TVSERC04-10	125
TVSESA10N	116
TVSES1	552
TVSES1Z	551
TVSEU1Z	552
TVSEU2	552
TVSEU2A	552
TVSEU2V	552
TVSG4011BCM	4011B
TVSGH3F	506
TVSGH3FLF	506
TVSGRU2A	552
TVSGRUZA	552
TVSGRV2A	506
TVSHA1151	1237
TVSHZA1	5011A
TVSHZT33S1	5036A
TVSHZ5C1	5010A
TVSHZ6A1	5011A
TVSHZ6C	5013T1
TVSHZ9A1	5016A
TVSHZ9C1	5018A
TVSHZ11B1	5020A
TVSHZ11C2	5020A
TVSHZ11C3TE	5020A
TVSHZ33S1	5036A
TVSKB162D	601
TVSKB265A	601
TVSKB462F	605A
TVSL35	527A
TVSL78M12RL	966
TVSL78N05	977
TVSLA7530N	1827
TVSM115SC	116(2)
TVSM1154C	116(2)
TVSM5218L	778S
TVSM53216P	7416
TVSMB-1F	525
TVSMB1F	525
TVSMI-15S	116(2)
TVSMI5SC	116(2)
TVSMI115RC	116
TVSMPC574J	615P
TVSMPC596C2	1187
TVSMPC596C2B	1187
TVSMPC596CE	1187
TVSMPC1355C	749
TVSMPL596C	1187
TVSMP0574J	615P
TVSMP0574J	615P
TVSMR-1M	125
TVSN13T1	6402
TVSOA01-11SE	5020A
TVSQ205AB	5010A
TVSQ207D	5015A
TVSQA01-07RE	5014A
TVSQA01-11SE	5074A
TVSQA106S	5013T1
TVSQA107RE	5071A
TVSQA107SP	5014A
TVSQA108SH	5016A
TVSQA111S	5074A
TVSQA112	5021A
TVSQA112R	5021A
TVSQA112R1	142A
TVSQA112RI	142A
TVSQA112RN-2	5021A
TVSQA135R2	5038A
TVSQA205AB	5009A
TVSQA205C	5010A
TVSQA205D	5010A
TVSQA205E	5010A
TVSQA205EV3	5010A
TVSQA205F	5010A
TVSQA205GV3	5010A
TVSQA206	5012A
TVSQA206AB	5011A
TVSQA206B	5012A
TVSQA206CD	5012A
TVSQA206G	5013T1
TVSQA206M	5012A
TVSQA206MV	5012A
TVSQA206MV3	519
TVSQA207D	5015A
TVSQA207M	5014A
TVSQA207M3	5014A
TVSQA208	5016A
TVSQA208C	5016A
TVSQA208G	5016A
TVSQA208GV3	5016A
TVSQA209B	5018A
TVSQA209C	5018A
TVSQA210D	5019T1
TVSQA211B	5020A
TVSQA211N1	5020A
TVSQA212B	5022A
TVSQA213B	5022A
TVSQA213M2	5022A
TVSQA225A	5032A
TVSQA228B	5034A
TVSQA230B	5035A
TVSQA233C	5036A
TVSQA233CV	5036A
TVSQA233CV3	5036A
TVSQA235AC	5032A
TVSQA235G	5037A
TVSQA1063	5013A
TVSQA1065	5013T1
TVSQA1085H	5016A
TVSQA2138	5022A
TVSQB105N	135A
TVSQB106P	5070A
TVSQB107D	5071A
TVSQB107S	5071A
TVSQB107SV	5071A
TVSQB110D	5074A
TVSQB112E1	142A
TVSQB115ZB	145A
TVSQB115ZBV	145A
TVSQB118	5077A
TVSQR06.2EB	5013T1
TVSRA-1Z	116
TVSRA-26	140A
TVSRA26	5089A
TVSRD2R4E	5000A
TVSRD3.0EB1	5004A
TVSRD3.0EB1Z	5004A
TVSRD3.0EB2	5004A
TVSRD3.03B2	5004A
TVSRD3.6EL1Z	5006A
TVSRD3R3EB	5005A
TVSRD3R6EB2	5006A
TVSRD4.7EB2	5009A
TVSRD4R7EB	5009A
TVSRD4R7EB2	5009A
TVSRD5.1EB1	5010A
TVSRD5.1EB1Z	5010A
TVSRD5.1EB2	5010A
TVSRD5.6EB1	5011A
TVSRD5.6EN3	5011A
TVSRD5.6EN3Z	5011A
TVSRD5R1EB2	5010A
TVSRD5R1JB3	5010A
TVSRD6.2EB	5013A
TVSRD6.2EB1	5012A
TVSRD6.2EB1Z	5013A
TVSRD6.2EB3	5013A
TVSRD6.2ED	5013A
TVSRD6.2FB1	137A
TVSRD6.2FB2	5013A
TVSRD7.5EB	5015A
TVSRD7.5EBM	5015A
TVSRD7.5EBMV	5015A
TVSRD8.2EB1	5016A
TVSRD8.2EB2	5016A
TVSRD10FC	140A
TVSRD11EB3	5020A
TVSRD12EB1	5021A
TVSRD12EB1Z	5021A
TVSRD12EB2	142A
TVSRD12EB2M	5021A
TVSRD12EBH	5021A
TVSRD12EBM	5021A
TVSRD13EB2Z	5022A
TVSRD13EB3	5022A
TVSRD13EL1	5022A
TVSRD15EB2	5024A
TVSRD15EB3	5024A
TVSRD15FM	145A
TVSRD15FMZ	145A
TVSRD16EB2	5025A
TVSRD22EB1	5030A
TVSRD24EB1	5031A
TVSRD27EB4TN	5033A
TVSRD27EBS	5033A
TVSRD33EB	5036A
TVSRD36EB3	5037A
TVSRD36EB3V	5037A
TVSRD36EB3Z	5037A
TVSRD47EB2	5088A
TVSRD132EB2	5022A
TVSRF-1A	506
TVSRF1	552
TVSRF1A	552
TVSRGP10J	552
TVSRGP105	552
TVSRG2	580
TVSRG4	580
TVSRG4J5	580
TVSRH-1	552
TVSRH1	552
TVSRH1M	552
TVSRH1S	552
TVSRH1SV	552
TVSRH2F	558
TVSRH2FM	525
TVSRM-26	5092A
TVSRM1	552
TVSRM1Z	552
TVSRM1ZM	116
TVSRM1ZMV	552
TVSRM2C	125
TVSRM10B	125
TVSRM10M	125
TVSRM10MV	125
TVSRM11B	125
TVSRM25	5089A
TVSRM26V	5092A
TVSRU2	552
TVSRU2AM	552
TVSRU2AN	552
TVSRU2M	552
TVSRU3AM	580
TVSRU3AN	552
TVSRU3N	580
TVSRVDFV211	601
TVSRVDKB167	605A
TVSRV2	52
TVSRV2AM	552
TVSS4LS221N	74LS221
TVSS6394GLC6	5424
TVSSIR80	552
TVSSIR80	116
TVSSN74LS09N	74LS09
TVSSN7403N	7403
TVSSN7409N	7409
TVSSN76642N	709
TVSSTR381A	1546
TVSSTR3130	15019
TVSSTR3230	1742
TVSSTR30130	1777
TVSTC4052BP	4052B
TVSTC4053BP	4053B
TVSTC4066BP	4066B
TVSTC4069UBP	4069
TVSTDA1190Z	1231
TVSTFH340M	5465
TVSTFS340M	5424
TVSTFS340MX	5424
TVSTFS340MY	5424
TVSTF340M	5465
TVSTMS1943A2	2060
TVSTMS1943N2	2060
TVSUF-2B	552
TVSUPC78	966
TVSUPC78M12H2	966
TVSUPC78M-12H2	966
TVSUPC574J	615P
TVSUPC596C2	1187
TVSUPC1363CA	1409
TVSUPC5474J	615P
TVSUPC5475	615P
TVSUPC5745	615P
TVSUPC57456	615P
TVSUPD466BC	4066B
TVSUPD4011BC	4011B
TVSUPD4013BC	4013B
TVSUPD4017BC	4017B
TVSUPD4027BC	4027B
TVSUPD4052BC	4052B
TVSUPD4053BC	4053B
TVSUPD4066BC	4066B
TVSUZ6R8B	5071A
TVSUZ18BS	5027A
TVSVD12221L	605A
TVSWZ061	5013A
TVSWZ270	5033A
TVSYZ065F	5071A
TW6N100CZ	5673
TW6N200CZ	5673
TW6N500CZ	5677
TW6N600CZ	5677
TW8N100CZ	5682
TW8N200CZ	5683
TW8N300CZ	5685
TW8N400CZ	5685
TW8N500CZ	5687
TW10N100CZ	5682
TW10N200CZ	5683
TW10N300CZ	5685
TW10N400CZ	5685
TW10N500CZ	5687
TW12N400CX	5695
TX12N06	2390
TX12N06P	2390
TXM2937H	324
TXM2937H183	324
TY2SA933	290A
TY2SA1198E	234
TY2SA1198S	290A
TY2SB822Q	21
TY2SC1652(Q)	18
TY2SC1652Q	18
TY2SC1652R	289A
TY2SC1740	85
TY504	5461
TY508	5461
TY510	5550
TY1004	5462
TY1008	5462
TY1010	5552
TY2004	5463
TY2008	5463
TY2010	5552
TY3004	5465
TY3008	5465
TY3010	5554
TY4004	5465
TY4008	5465
TY4010	5554
TY5004	5466
TY5008	5466
TY5010	5556
TY6004	5466
TY6008	5466
TY6010	5556
TYDTA124N	2358
TYDTA124S	2358
TYDTA144S	2360
TYDTC114ES	2355
TYDTC124N	2357
TYDTC124S	2357
TYDTC144N	2359
TYDTC144S	2359
TYL124	3011
TYN410	5465
TYN682	5550
TYN683	5552
TYN685	5552
TYN688	5554
TYN690	5556
TYN692	5558
TZ4A326	552
TZ4C254	116
TZ4C284	552
TZ4E254	116
TZ966-03	152
TZ1029-01	165
TZ1034	171
TZ1037	171
U0A	552
U05-E	125
U05B	156
U05E	5804
U05ES	156
U05ESS	5804
U05G	5805
U05G(FLYBACK)	558
U05J	155
U06B	580
U06C	580
U06E	116
U06G	5806
U08A05	597
U08A10	597
U08A15	597
U08A20	597
U08A30	598
U08A40	598
U08A50	598
U08A60	598
U1	552
U1(RECT)	552
U1Z	552
U2	552
U2(RECT)	552
U2-12B	5021A
U2A	552
U5B7746394	705A
U5B77411393	941
U5F7747312	947
U5F7747393	947
U5Z7703394	703
U6B7414159X	74141
U6B7780394	714
U6BA01559X	7441
U7BA04559X	7445
U7BN046591	7446
U7BN04859X	7448
U7BN14559X	74145
U8B770339	703
U8B770339-851	703
U9BA01559X	7441
U9BA04559X	7445
U9BN14559X	74145
U15A05	599
U15A10	599
U15A15	599
U15A20	599
U15C	156
U16C05C	6240
U16C10C	6240
U16C15C	6240
U16C20C	6240
U19-E	580
U19B	580
U19C	552
U19E	580
U19E-F	580
U19E-FK	580
U98BN14159X	74141
U98N046591	7446
U98N04859X	7448
U183	459
U410	461
U411	461
U412	461
U574	615P
U574(TUNER)	615P
U574J	615P
U574K	615P
U1585E	123AP
U8442K	397
UA8T26	6880
UA8T26D	6880
UA8T26DC	6880
UA8T26P	6880
UA8T26PC	6880
UA8T28	6889
UA8T28DC	6889
UA8T28P	6889
UA67	722
UA78CB	934
UA78CBCK	934
UA78G1IC	953
UA78GU1C	953
UA78GUIC	953
UA78H05ASC	932
UA78H05C	932
UA78H05KC	932
UA78H05SC	932
UA78H12	933
UA78H12A	933
UA78H12AS	933
UA78H12ASC	933
UA78H12C	933
UA78H12CK	933
UA78H12SC	933
UA78L	981
UA78L05	977
UA78L05ACL	977
UA78L05ACLP	977
UA78L05AWC	977
UA78L05CLP	977
UA78L06.2AHC	988
UA78L06A	988
UA78L06CLP	988
UA78L06S	988
UA78L08A	981
UA78L08AC	981
UA78L08ACLP	981
UA78L08AWC	981
UA78L08C	981
UA78L08CLP	981
UA78L08S	981
UA78L08WC	981
UA78L09	1902
UA78L09AC	1902
UA78L09C	1902
UA78L062WV	988
UA78L12	950
UA78L12A	950
UA78L12AWC	950
UA78L12CLP	950
UA78L15ACLP	951
UA78L15AWC	951
UA78L15CLP	951
UA78L62AWC	988
UA78L72AWC	981
UA78L82	981
UA78L82AWC	981
UA78L82AWV	981
UA78L82W	981
UA78L-8.2AWC	981
UA78LAWC	981
UA78LO8	981
UA78M05C	960
UA78M05UC	960
UA78M06CKC	962
UA78M06UC	962
UA78M08CKC	964
UA78M08CKD	964
UA78M08UC	964
UA78M12	966
UA78M12CKC	966
UA78M12CKD	966
UA78M12UC	966
UA78M15CKC	968
UA78M15CKD	968
UA78M15UC	968
UA78M24CKD	972
UA78M24UC	972
UA79(TO3)	1927
UA79G(TO3)	1927
UA79GKC	1927
UA79GUIC	954
UA79M05AUC	961
UA79M05C	961
UA79M06AUC	963
UA79M06CKC	963
UA79M12AUC	967
UA79M12CKC	967
UA79M12CKD	967
UA79M15AUC	969
UA79M15CKC	969
UA79M15CKD	969
UA79M24AUC	971
UA79M24CKC	971
UA79M24CKD	971
UA201AH	1171
UA201H	1171
UA209KM	309K
UA224DM	987
UA301AH	1171
UA301AHC	1171
UA301AT	975
UA301ATC	975
UA305H	1928
UA305HC	1928
UA307T	976
UA307TC	976
UA308AHC	938
UA308HC	938
UA308TC	938M
UA309K	309K
UA309KC	309K
UA311H	922
UA311HC	922
UA311TC	922M
UA324DC	987
UA324PC	987
UA324SC	987SM
UA339ADC	834
UA339P	834
UA348DC	948
UA376TC	1930
UA555	955M
UA555TC	955M
UA556PC	978
UA703	703
UA703A	703
UA703C	703
UA703CH	703
UA703CT	703
UA703E	703
UA703HC	703
UA703L	703
UA709A	909D
UA709C(DIP)	909D
UA709CA	909D
UA709CJ	909D
UA709CL	909
UA709CN	909D
UA709CP	909D
UA709CT	909
UA709DC	909D
UA709HC	909
UA709HM	909
UA709PC	909D
UA709T	909
UA710A	910D
UA710C(DIP)	910D
UA710C(METAL CAN)	910
UA710CA	910D
UA710CJ	910D
UA710CL	910
UA710CN	910D
UA710CT	910
UA710DC	910D
UA710HC	910
UA710PC	910D
UA710T	910
UA711A	911
UA711C(METAL CAN)	911
UA711CK	911
UA711CL	911
UA711CT	911
UA711HC	911
UA711K	911
UA715HC	915
UA720	744
UA720DC	744
UA720PC	744

PART NUMBER	NTE REPLACEMENT
UA723C	923D
UA723C(DIP)	923D
UA723C(METAL CAN)	923
UA723CA	923D
UA723CJ	923D
UA723CN	923D
UA723DC	923D
UA723HC	923
UA723HM	923D
UA723PC	923D
UA725(METAL CAN)	925
UA733CF	927D
UA733CH	927
UA733CJ	927D
UA733CN	927D
UA733HC	927
UA733PC	927D
UA736	739
UA739	725
UA739C	725
UA739PC	725
UA740(METAL CAN)	940
UA740CT	940
UA741	941M
UA741(MINIDIP)	941M
UA741C	941D
UA741C(DIP)	941D
UA741C(METAL CAN)	941
UA741CFP	941SM
UA741CJ	941D
UA741CN	941D
UA741CP	941M
UA741CT	941
UA741CV	941M
UA741HC	941
UA741TC	941M
UA747	947D
UA747(METAL CAN)	947
UA747A	947D
UA747C	947D
UA747CF	947D
UA747CJ	947D
UA747CK	947
UA747CL	947
UA747CN	947D
UA747E	947D
UA747K	947
UA747PC	947D
UA748CFP	975SM
UA748HC	1171
UA748TC	975
UA748V	975
UA749C(METAL CAN)	949
UA749DHC	949
UA753	736
UA758	743
UA758AP	743
UA758B	743
UA758BA	743
UA758N	743
UA758PC	743
UA767P	722
UA767PC	722
UA776C	888M
UA776TC	888M
UA780	714
UA780C	714
UA780DC	714
UA780PC	714
UA781	715
UA787	797
UA787PC	797
UA796DC	973D
UA796HC	973
UA796PC	973D
UA798HM	928
UA915	5130A
UA947DC	947D
UA1312PC	799
UA1391TC	815
UA1458CTC	788
UA1458TC	778A
UA1488	75188
UA1488D	75188
UA1488DC	75188
UA1488P	75188
UA1488PC	75188
UA1489	75189
UA1489APC	75189
UA1489D	75189
UA1489DC	75189
UA1489P	75189
UA1489PC	75189
UA1489PCQR	75189
UA1748G	1171
UA1789	75189
UA2002	1232
UA2136DC	737
UA2136P	737
UA2136PC	737
UA2901PC	834
UA2902	987
UA3018AHM	904
UA3018H	904
UA3019HC	905
UA3026HC	906
UA3039HC	907
UA3045DC	912
UA3045PC	912
UA3046DC	912
UA3046PC	912
UA3054DC	917
UA3064	780
UA3064HC	780
UA3064PC	783
UA3064TC	780
UA3064TC#	780
UA3065	712
UA3065P	712
UA3065PC	712
UA3075	723
UA3075PC	723
UA3086DC	912
UA3086PC	912
UA3089E	788
UA3301P	992
UA3401PC	992
UA4136	997
UA4136P	997
UA4136PC	997
UA4188DC	75188
UA4558T	778A
UA4748TC	975
UA7508A	960
UA7805	960
UA7805A	960
UA7805ASC	932
UA7805C	960
UA7805CDA	931
UA7805CKC	960
UA7805CT	960
UA7805CU	960
UA7805KC	309K
UA7805SC	932
UA7805UC	960
UA7806CKC	962
UA7808	964
UA7808C	964
UA7808CKC	964
UA7808CU	964
UA7808UC	964
UA7812C	966
UA7812CKC	966
UA7812KC	1914
UA7812KM	1914
UA7812UC	966
UA7815	1902
UA7815C	968
UA7815CKC	968
UA7815CU	968
UA7815KC	1916
UA7815KM	1916
UA7815UC	968
UA7818CKC	958
UA7818CKG	958
UA7818KC	1920
UA7818KM	1920
UA7818UC	958
UA7824C	1924
UA7824CKC	972
UA7824KC	1924
UA7824UC	972
UA7905	961
UA7905C	961
UA7905CKC	961
UA7905KC	1913
UA7905KM	1913
UA7905UC	961
UA7906CKC	963
UA7906U	963
UA7906UC	963
UA7908CKC	965
UA7908CKG	965
UA7908UC	965
UA7912	967
UA7912CKC	967
UA7912KC	1915
UA7912KM	1915
UA7912U	967
UA7912UC	967
UA7915	969
UA7915CKC	969
UA7915KC	1919
UA7915KM	1919
UA7915U	969
UA7915UC	969
UA7918CKA	1923
UA7918CKC	959
UA7918CKG	959
UA7918UC	959
UA7924CKC	971
UA7924KC	1925
UA7924KM	1925
UA7924U	971
UA7924UC	971
UA9667	2013
UA9667PC	2013
UA9668	2014
UA9668PC	2014
UA-767	722
UAC7812H	966
UC220	133
UC241	133
UC756	133
UC1406HA	1792
UC1526	1722
UC1526A	1722
UC1526AN	1722
UC1526N	1722
UC2136	133
UC2138	133
UC2139	133
UC2147	133
UC2148	133
UC2149	133
UC3524	1720
UC3524A	1720
UC3525	1721
UC3525A	1721
UC3527	1723
UC3527A	1723
UC3527AN	1723
UC4741	941
UC4741C	941
UC7933	966
UD5G	156
UD5J	156
UD127ME	519
UDN6118	2021
UDN6128	2022
UDN6144	2025
UDN6144A	2025
UDN6164	2026
UDN6164A	2026
UDN-6118A	2021
UDN-6128-2	2022
UDN-6128A	2022
UDN-G118A	2021
UDN-G128A	2022
UDZ8718	5077A
UES1001	587
UES1002	587
UES1003	587
UES1101	588
UES1102	588
UES1103	588
UES1401	597
UES1402	597
UES1403	597
UES1501	599
UES1502	599
UES1503	599
UES1504	599
UES2401	6240
UES2401R	6244
UES2402	6240
UES2402R	6244
UES2403	6240
UES2403R	6244
UES2404	6240
UES2404R	6244
UF01	506
UF1001	587
UF1002	587
UF1003	587
UF3001	588
UF3002	588
UF3003	588
UF4001	587
UF4002	587
UF4003	587
UF5402	588
UF-01	160
UF-1	552
UF-1A	506
UF-1D	5805
UF-1E	5805
UF-1F	5805
UF-1S	552
UF-1V	552
UF-2	552
UF-2B	558
UFR600	577
UFR601	577
UFR602	577
UFR604	577
UG3C	177
UG-1002	5305
UG-1004	5304
UGH7812	966
UGJ7109393	309K
UHIC001	1201
UHIC003	1202
UHIC004	1203
UHIC-003	1202
UHIC-004	1203
UHIC-004E	1203
UHIC-007	1262
ULC3037	708
ULM2111A	709
ULN2001	2011
ULN2001A	2011
ULN2001AN	2011
ULN2002	2012
ULN2002A	2012
ULN2002AN	2012
ULN2002QN	2012
ULN2003	2013
ULN2003A	2013
ULN2003AN	2013
ULN2004	2014
ULN2004A	2014
ULN2004AN	2014
ULN2005	2015
ULN2005A	2015
ULN2014	2014
ULN2064B	2085
ULN2064NE	2085
ULN2065B	2085
ULN2065NE	2085
ULN2066B	2086
ULN2067B	2086
ULN2067NE	2086
ULN2068B	2087
ULN2068NE	2087
ULN2069	2087
ULN2069B	2087
ULN2069NE	2087
ULN2070B	2088
ULN2071B	2088
ULN2081A	916
ULN2082A	2023
ULN2111	708
ULN2111A	708
ULN2111N	708
ULN2113	709
ULN2113A	709
ULN2113N	709
ULN2124	714
ULN2124A	714
ULN2125	731
ULN2125A	731
ULN2127	715
ULN2128	722
ULN2129	723
ULN2137	744
ULN2165	712
ULN2203	2013
ULN2208M	736
ULN2209	736
ULN2210	801
ULN2211	742
ULN2211B	742
ULN2212B	807
ULN2224	739
ULN2224A	739
ULN2226	739
ULN2231	983
ULN2231A	983
ULN2244	743
ULN2244A	743
ULN2244N	743
ULN2244R	743
ULN2245	743
ULN2245A	743
ULN2260	701
ULN2260A	701
ULN2261A	818
ULN2262	797
ULN2262A	797
ULN2262N	797
ULN2264	783
ULN2264K	780
ULN2265	845
ULN2265A	845
ULN2268	982
ULN2269	791
ULN2278	804
ULN2278B	804
ULN2280P	740A
ULN2280Q	740A
ULN2281B	862
ULN2289	788
ULN2291M	815
ULN2298	738
ULN2801	2016
ULN2801A	2016
ULN2802	2017
ULN2802A	2017
ULN2803	2018
ULN2803A	2018
ULN2804	2019
ULN2804A	2019
ULN2805	2020
ULN2805A	2020
ULN2813A	2018
ULN3262A	797
ULN3701Z	1232
ULN3701ZV	1232
ULN3702V	1232
ULN3702Z	1232
ULN3703V	1288
ULN3703Z	1288
ULN3810	801
ULN3810A	801
ULN3810A-1	801
ULN8125	1721
ULN8125A	1721
ULN8126	1722
ULN8126AN	1722
ULN8126N	1722
ULN8127	1723
ULN8127A	1723
ULN8194	1729
ULN8194C	1729
ULN-2001A	2011
ULN-2002A	2012
ULN-2003A	2013
ULN-2004A	2014
ULN-2005A	2015
ULN-2011A	2011
ULN-2012A	2012
ULN-2013A	2013
ULN-2014A	2014
ULN-2015A	2015
ULN-2046A	912
ULN-2081	916
ULN-2081A	916
ULN-2082A	2023
ULN-2085A	2020
ULN-2811A	2016
ULN-2812A	2017
ULN-2813A	2018
ULN-2814A	2019
ULN-2815A	2020
ULS2741D	941
ULT3730	127
ULT3731	127
ULX2210	801
ULX2210D	801
ULX2244	743
UM6532	6532
UM95089	1690
UN1111	2356
UN1112	2358
UN1113	2360
UN1211	2355
UN1212	2357
UN1213	2359
UN4066B	4066B
UN4111	2356
UN4112	2358
UN4113	2360
UN4211	2355
UN4212	2357
UN4213	2359
UN6291	4066B
UN40663	4066B
U05E	5804
U05G	5806
U05G(FLYBACK)	558
U05J	5809
U06C	525
U0-5E	5804
U0A	552
UP32C	1050
UP4011C	4011B
UP4012C	4011B
UPA53C	2084
UPA64H	1680
UPA67C	2083
UPA2001	2011
UPA2001C	2011
UPA2002	2012
UPA2002C	2012
UPA2003	2013
UPA2003C	2013
UPA2004	2014
UPA2004C	2014
UPA2004CA	2014
UPB201C	7400
UPB202C	7410
UPB202D	7410
UPB203C	7420
UPB203D	7420
UPB205C	7440
UPB205D	7440
UPB206C	7450
UPB206D	7450
UPB207C	7451
UPB207D	7451
UPB208D	7453
UPB209D	7454
UPB210C	7460
UPB210D	7460
UPB211C	7472
UPB211D	7470
UPB212C	7473
UPB212D	7472
UPB213C	7474
UPB214C	7474
UPB214D	7474
UPB215C	7401
UPB215D	7401
UPB216C	74H11
UPB217C	7475
UPB217D	7475
UPB218C	7441
UPB218D	7441
UPB219C	7490
UPB219D	7490
UPB222C	7492
UPB222D	7492
UPB223C	7493A
UPB223D	7493A
UPB224C	7476
UPB224D	7476
UPB225C	7473
UPB225D	7473
UPB226C	7495
UPB226D	7495
UPB227D	7442
UPB230D	7483
UPB232C	7402
UPB232D	7402
UPB233C	74H21
UPB233D	74H21
UPB234C	7408
UPB234D	7408
UPB235D	7404
UPB236D	7405
UPB237D	7437
UPB238D	7438
UPB2047D	7447
UPB2080D	7480
UPB2085D	7485
UPB2086D	7486
UPB2091D	7491
UPB2150D	74150
UPB2151D	74151
UPB2154D	74154
UPB2161D	74161
UPB2170D	74170
UPB2180D	74180
UPB2181P	74181
UPB2182D	74182
UPB2192D	74192
UPB2193D	74193
UPB2195D	74195
UPB2198D	74198
UPB7400C	7400
UPB7402C	7402
UPB7404C	7404
UPB7405C	7405
UPB7410C	7410
UPB7413C	7413
UPB7420C	7420
UPB7430C	7430
UPB7437C	7437
UPB7438C	7438
UPB7440C	7440
UPB7442C	7442
UPB7445C	7445
UPB7447C	7447
UPB7450C	7450
UPB7451C	7451
UPB7453C	7453
UPB7454C	7454
UPB7460C	7460
UPB7473C	7473
UPB7474C	7474
UPB7476C	7476
UPB7480C	7480
UPB7485C	7485
UPB7486	7486
UPB7486C	7486
UPB7491C	7491
UPB8214	8214
UPB8214C	8214
UPB74107C	74107
UPB74123C	74123
UPB74141D	74141
UPB74150C	74150
UPB74151C	74151
UPB74153C	74153
UPB74154C	74154
UPB74155C	74155
UPB74156	74156
UPB74161C	74161
UPB74164C	74164
UPB74170D	74170
UPB74180C	74180
UPB74181D	74181
UPB74182C	74182
UPB74192C	74192
UPB74193C	74193
UPB74195C	74195
UPB74198D	74198
UPC15MA	1171
UPC16A	1045
UPC20C	1075A
UPC23C	1046
UPC29C2	1089
UPC30C	1049
UPC32C	1050
UPC41C	1093
UPC48C	1091
UPC55A	909
UPC78L05	977
UPC78L05A	977
UPC78L05J	977
UPC78L06	988
UPC78L08	981
UPC78L12	950
UPC78L15	951
UPC78M05	960
UPC78M08H	964
UPC78M12	966
UPC78M18H	958
UPC81	1075A
UPC81C	1075A
UPC143-05	960
UPC157C	975
UPC177C	834
UPC206	1075A
UPC262C	1050
UPC271C	922M
UPC301AC	975
UPC301AN	975
UPC305C	1930
UPC311C	922M
UPC324	987
UPC324C	987
UPC339C	834
UPC358	928M
UPC358C	928M
UPC393	943M
UPC393C	943M
UPC494	1729
UPC494C	1729
UPC554	1142
UPC554C	1142
UPC554H	1142
UPC561	1079
UPC562C	1050
UPC563H	1081A
UPC566H	1052
UPC566H3	1052
UPC566H-B	1052
UPC566H-L	1052
UPC566H-M	1052
UPC566H-N	1052
UPC574	615P
UPC574C	615P
UPC574J	615P
UPC574J(AG)	615P
UPC574J(L)	615P
UPC574J(M)	615P
UPC574J(V)	615P
UPC574J-A	615P
UPC574J-B	615P
UPC574J-G	615P
UPC574J-KL	615P
UPC574J-T	615P
UPC574JA	615P
UPC574JAG	615P
UPC574JC	615P
UPC574JK	615P
UPC574JL	615P
UPC574JM	615P
UPC574JT	615P
UPC574K02L	615P
UPC574K021	615P
UPC574KJ	615P
UPC574KJAG	615P
UPC574V	615P
UPC575	1140
UPC575C	1140
UPC575C2	1140
UPC576H	1185
UPC577	1082
UPC577A	1082
UPC577H	1082
UPC577N	1082
UPC592A2	1195
UPC592H	1195
UPC592H2	1195
UPC592HZ	1195
UPC595C2	1187
UPC596	1187
UPC596C	1187
UPC596C2	1187
UPC741	941M
UPC741C	941M
UPC767PC	722
UPC861C	1254
UPC861CE	1254
UPC1001	1127
UPC1001H	1127
UPC1001H2	1127
UPC1008C	1172
UPC1018	1563
UPC1018C	1563
UPC1020	1160
UPC1020H	1160
UPC1025	1081A
UPC1025H	1081A
UPC1026	1226
UPC1026C	1226
UPC1028HA	1234
UPC1031H	1245
UPC1031H2	1245
UPC1032H	1170
UPC1057C	1611
UPC1158H2	1497
UPC1161C	1489
UPC1167C	1488
UPC1171C	1491
UPC1173C	1460
UPC1181	1285
UPC1181H	1285
UPC1181H2	1285
UPC1181H3	1285
UPC1185	1293
UPC1185H	1293
UPC1185H2	1293
UPC1186	1458
UPC1186H	1458
UPC1187V	1493
UPC1188	1724
UPC1188H	1724
UPC1191V	1495
UPC1197C	1248
UPC1212C	1516
UPC1213C	1516
UPC1216	1518
UPC1230	1389
UPC1230H	1389
UPC1238	1378
UPC1252H2	1794
UPC1253H2	1795
UPC1277	1626
UPC1277H	1626
UPC1350	1530
UPC1350C	1530
UPC1350XC	1530
UPC1352	1416
UPC1352C	1416
UPC1352S	1410
UPC1353	1246
UPC1353C	1246
UPC1355	749
UPC1355C	749
UPC1356C	1483
UPC1356C2	1483
UPC1360C	1520
UPC1363	1409
UPC1363C	1409
UPC1363CA	1409N
UPC1366	1522
UPC1366C	1522
UPC1366C2	1522
UPC1366CA	1522
UPC1367	1417
UPC1367C	1417
UPC1371C	1410
UPC1372C	1410
UPC1373	1714M
UPC1373H	1714S
UPC1373HA	1714S
UPC1377	1664
UPC1377C	1664
UPC1378	1676
UPC1378-H-L	1676
UPC1378H	1676
UPC1378H-L	1676
UPC1378H-P	1676
UPC1379	1661
UPC1379C	1661
UPC1382C	1616
UPC1391	1668
UPC1391H	1668
UPC1394	1678

PART NUMBER	NTE REPLACEMENT
UPC1394C	1678
UPC1401	1793
UPC1401CA	1793
UPC1402	1793
UPC1402CA	1793
UPC1406HA	1792
UPC1458C	778A
UPC1470	1844
UPC1470H	1844
UPC1474HA	1791
UPC1480CA	1800
UPC1481CA	1801
UPC1486	7019
UPC1486C	15042
UPC1513	15005
UPC1513H	15005
UPC1513HA	15005
UPC1520	7020
UPC1520CA	7020
UPC1555C	955M
UPC2002	1232
UPC2002V	1232
UPC4001C	4001B
UPC4013	4013B
UPC4051BC	4051B
UPC4066	4066B
UPC4558	778A
UPC4558C	778A
UPC4558D	778A
UPC5742	615
UPC5745	615P
UPC5745J	615P
UPC7805	960
UPC7805H	960
UPC7808H	964
UPC7812	966
UPC7812H	966
UPC7812HF	966
UPC7815H	968
UPC7818H	958
UPC7818HF	958
UPC7824H	972
UPC7905H	961
UPC7908H	965
UPC7912H	967
UPC7915H	969
UPC7918H	959
UPC7924H	971
UPC14305	977
UPC14305H	960
UPC14308	964
UPC14308H	964
UPC14312	966
UPC14312H	966
UPC14315	968
UPC14315D	968
UPC14315H	968
UPC-16	1045
UPC-16A	1045
UPC-554	1142
UPC-574J	615P
UPC-574J(AG)	615P
UPC-576H	1185
UPC-596C	1187
UPC-781-05AN	977
UPC-1379C	1661
UPCD4078C	4078B
UPD	4052B
UPD411	2107
UPD411-1	2107
UPD411-2	2107
UPD411A	2107
UPD411A-1	2107
UPD411A-2	2107
UPD411D	2107
UPD411D-1	2107
UPD411D-2	2107
UPD411D-E	2107
UPD471C	4071B
UPD780C	3880
UPD780C-1	3880
UPD780D	3880
UPD780D-1	3880
UPD857	1199
UPD857C	1199
UPD858	1198
UPD858C	1198
UPD861C	1254
UPD861CE	1254
UPD1373H	15004
UPD1986	1758
UPD1986C	1758
UPD1987	1759
UPD1987C	1759
UPD2114LC	2114
UPD2114LC-1	2114
UPD2716	2716
UPD2732	2732A
UPD2732A	2732A
UPD2732AD	2732A
UPD2732D	2732A
UPD2764	2764
UPD2764-2	2764
UPD2764-3	2764
UPD2764-4	2764
UPD4001BC	4001B
UPD4001C	4001B
UPD4002BC	4002B
UPD4002C	4002B
UPD4011	4011B
UPD4011B	4011B
UPD4011BC	4011B
UPD4011BCM	4011B
UPD4011C	4011B
UPD4012BC	4012B
UPD4012C	4012B
UPD4013BC	4013B
UPD4013C	4013B
UPD4015C	4015B
UPD4016	2128
UPD4016-1	2128
UPD4016-2	2128
UPD4016-3	2128
UPD4016C	2128
UPD4016C-2	2128
UPD4016D-1	2128
UPD4017BC	4017B
UPD4017C	4017B
UPD4020C	4020B
UPD4021C	4021B
UPD4023BC	4023B
UPD4023C	4023B
UPD4024B	4027B
UPD4025C	4025B
UPD4027	4027B
UPD4027BC	4027B
UPD4027C	4027B
UPD4029	4029B
UPD4029C	4029B
UPD4030BC	4030B
UPD4030C	4030B
UPD4035C	4035B
UPD4040BC	4040B
UPD4040C	4040B
UPD4042C	4042B
UPD4049	4049
UPD4049C	4049
UPD4049UBC	4049
UPD4050C	4050B
UPD4051BC	4051B
UPD4052BC	4052B
UPD4053	4053B
UPD4053B	4053B
UPD4053BC	4053B
UPD4053BP	4053B
UPD4066	4066B
UPD4066B	4066B
UPD4066B-1	4066B
UPD4066BC	4066B
UPD4066BP	4066B
UPD4066G	4066B
UPD4069C	4069
UPD4069UB	4069
UPD4069UBC	4069
UPD4071	4071B
UPD4071BC	4071B
UPD4081BC	4081B
UPD4081C	4081B
UPD4093BC	4093B
UPD4116	2117
UPD4160BC	40160B
UPD4164	4164
UPD4164-0	4164
UPD4164-1	4164
UPD4164-3	4164
UPD4503BC	4503B
UPD4503C	4503B
UPD4511	4511B
UPD4518	4518B
UPD4520C	4520B
UPD4528BC	4528B
UPD4528C	4528B
UPD4539C	4539B
UPD4555C	4555B
UPD4556C	4556B
UPD4584BC	40106B
UPD5101	65101
UPD7805	960
UPD8255AC-5	8255
UPD41256	4256
UPD41256-10	4256
UPD41256-15	21256
UPI706	108
UPI706A	108
UPI706B	229
UPI718A	123AP
UPI956	123AP
UPI1303	158
UPI1305	158
UPI1307	158
UPI1309	158
UPI1345	158
UPI1347	100
UPI1353	102
UPI1613	128
UPI2217	293
UPI2218	293
UPI2222	123AP
UPI2222B	123AP
UPI2222P	123AP
UPI4046	293
UPI4046-46	123AP
UPI4047-46	123
UPS1513HA	15005
UPS8080A	8080A
UPT011	198
UPT012	198
UPT013	198
UPT014	198
UPT015	198
UPT021	198
UPT022	198
UPT023	198
UPT024	198
UPT025	198
UPT111	235
UPT112	198
UPT113	198
UPT114	198
UPT115	198
UPT121	236
UPT122	198
UPT123	198
UPT124	198
UPT125	198
UPT211	224
UPT221	175
UPT223	369
UPT224	369
UPT225	369
UPT325	369
UPT611	236
UPT621	236
UPT1131	328
UPT1132	328
UPT1133	328
UPT1134	328
UPT1135	328
UR22F	5136A
UR105	116
UR110	116
UR115	116
UR120	116
UR123AA	5870
UR123BA	5872
UR123CA	5874
UR123DA	5874
UR123EA	5878
UR123FA	5878
UR123GA	5878
UR123HA	5878
UR123KA	5878
UR123MA	5882
UR123PA	5886
UR123RA	5886
UR123VA	5890
UR125	116
UR205	5800
UR210	5801
UR215	5802
UR220	5802
UR225	5804
URS-126-2	162
US8T28D	6889
US8T28PC	6889
US15-1	503
US15/3	505
US15/16	503
US20-1B	505
US20/1BS	503
US20/16	504
US25-1AS	503
US25-1B	504
US25/1	504
US25/1A	503
US25/1AS	503
US25/1CS	504
US74H00A	74H00
US74H00J	74H00
US74H01A	74H01
US74H01J	74H01
US74H04A	74H04
US74H04J	74H04
US74H05A	74H05
US74H05J	74H05
US74H08A	74H08
US74H08J	74H08
US74H10A	74H10
US74H10J	74H10
US74H11A	74H11
US74H11J	74H11
US74H20A	74H20
US74H20J	74H20
US74H21A	74H21
US74H21J	74H21
US74H22A	74H22
US74H22J	74H22
US74H30A	74H30
US74H30J	74H30
US74H40A	74H40
US74H40J	74H40
US74H50A	74H50
US74H50J	74H50
US74H51A	74H51
US74H51J	74H51
US74H52A	74H52
US74H52J	74H52
US74H53A	74H53
US74H54A	74H54
US74H54J	74H54
US74H55A	74H55
US74H55J	74H55
US74H60A	74H60
US74H60J	74H60
US74H61A	74H61
US74H61J	74H61
US74H62A	74H62
US74H62J	74H62
US74H71A	74H71
US74H71J	74H71
US74H72A	74H72
US74H72J	74H72
US74H73A	74H73
US74H73J	74H73
US74H74A	74H74
US74H74J	74H74
US74H76A	74H76
US74H78A	74H78
US74H78J	74H78
US78L05AWC	977
US123EA	5878
US123GA	5878
US123PA	5886
US123RA	5886
US123VA	5890
US1040M	177
US1040MT	177
US1555	177
US7051A	5010A
US7082A	5061A
US7091	5018A
US7120B	5021A
US7150	5024A
US7400A	7400
US7400J	7400
US7401A	7401
US7401J	7401
US7402A	7402
US7402J	7402
US7403A	7403
US7403J	7403
US7404A	7404
US7404J	7404
US7405A	7405
US7405J	7405
US7408A	7408
US7408J	7408
US7409A	7409
US7409J	7409
US7410A	7410
US7410J	7410
US7411A	7411
US7411J	7411
US7420A	7420
US7420J	7420
US7426A	7426
US7427A	7427
US7430A	7430
US7430J	7430
US7432A	7432
US7432J	7432
US7438A	7438
US7438J	7438
US7440A	7440
US7440J	7440
US7441A	7441
US7442A	7442
US7443A	7443
US7444A	7444
US7445A	7445
US7446A	7446
US7447A	7447
US7448A	7448
US7450A	7450
US7450J	7450
US7451A	7451
US7451J	7451
US7453A	7453
US7453J	7453
US7454A	7454
US7454J	7454
US7460A	7460
US7460J	7460
US7470A	7470
US7470J	7470
US7472A	7472
US7472J	7472
US7473A	7473
US7473J	7473
US7474A	7474
US7474J	7474
US7475A	7475
US7475J	7475
US7476A	7476
US7480A	7480
US7482A	7482
US7483A	7483
US7486A	7486
US7486J	7486
US7490A	7490
US7490J	7490
US7492A	7492
US7492J	7492
US7493A	7493A
US7493J	7493A
US74107A	74107
US74121A	74121
US74121J	74121
US74145A	74145
US74153A	74153
US74154A	74154
US74154AN	74154
US74180A	74180
US74180J	74180
USD620C	6085
USD635C	6085
USD640C	6085
USD645C	6085
USD720C	6087
USD735C	6087
USD740C	6087
USD745C	6087
USD7703394	703
USFD-1	116
USFD-1A	116
UT11	5800
UT12	5802
UT12.8B	143A
UT13	5802
UT14	116
UT15	116
UT16	116
UT17	116
UT18	116
UT21	116
UT22	116
UT23	116
UT24	116
UT25	116
UT26	116
UT27	116
UT111	116
UT112	116
UT113	116
UT114	116
UT115	116
UT116	116
UT117	116
UT118	116
UT119	125
UT120	125
UT123AA	5940
UT211	116
UT212	116
UT213	116
UT214	116
UT215	116
UT221	116
UT222	116
UT223	116
UT224	116
UT225	116
UT226	116
UT227	116
UT228	116
UT229	116
UT231	116
UT232	116
UT233	116
UT234	5802
UT235	5804
UT236	5801
UT237	5805
UT238	5806
UT242	5802
UT244	5804
UT245	5805
UT247	5806
UT249	5801
UT251	5801
UT252	5802
UT254	5804
UT255	5805
UT257	5806
UT258	5808
UT261	5801
UT262	5802
UT264	5804
UT265	5805
UT267	5806
UT268	5808
UT345	125
UT347	5809
UT361	5808
UT362	5808
UT363	5809
UT364	5809
UT2005	5800
UT2010	5801
UT2020	5802
UT2040	5804
UT2060	5806
UT2080	156
UT3005	5800
UT3010	5801
UT3020	5802
UT3040	5804
UT3060	5806
UT3080	5808
UT-16	116
UT-112	116
UT-234	116
UT-238	116
UTRA-7RM	121
UZ1-3.3	5066A
UZ1-3.4	5066A
UZ1-3.6	134A
UZ1-3.9	5067A
UZ1-4.3	5068A
UZ1-4.7	5069A
UZ1-5.1	135A
UZ1-5.6	136A
UZ1-6.2	137A
UZ1-6.8	5071A
UZ1-7.5	138A
UZ1-8.2	5072A
UZ1-9.1	139A
UZ1-10	140A
UZ1-11	5074A
UZ1-11.5	141A
UZ1-12	142A
UZ1-14	144A
UZ1-15	145A
UZ1-20	5079A
UZ1-22	5080A
UZ1-26	146A
UZ1-27	146A
UZ1-29	5084A
UZ1-33	147A
UZ1-36	5085A
UZ1-39	5086A
UZ1-43	5087A
UZ1-43G	5087A
UZ1-47	5088A
UZ1-47G	5088A
UZ1-51	5089A
UZ1-55	148A
UZ1-56	5090A
UZ1-62	149A
UZ1-68	5092A
UZ1-82	150A
UZ1-92	5095A
UZ1-120	5097A
UZ1-128	143A
UZ1-130	5098A
UZ1-140	5099A
UZ1-150	5100A
UZ1-160	5101A
UZ1-164	5075A
UZ1-170	5102A
UZ1-176	5077A
UZ1-180	5103A
UZ1-190	5104A
UZ1-200	5105A
UZ3.3	5066A
UZ3.6	134A
UZ4.7BCA	5069A
UZ5.1	135A
UZ5R6BM	136A
UZ6	137A
UZ6.2	137A
UZ6.2B	137A
UZ6.8	5071A
UZ6.8B	5071A
UZ6.8V	5071A
UZ6R2BKTA	5013A
UZ6R8B	5071A
UZ7.5	138A
UZ8.2	5072A
UZ8.2B	5072A
UZ8.2V	5072A
UZ9.1	139A
UZ9.1B	139A
UZ9B	139A
UZ10BL	140A
UZ12B	142A
UZ13B	143A
UZ15	145A
UZ30BSC	5084A
UZ62B	149A
UZ110	5156A
UZ111	5157A
UZ112	5158A
UZ113	5159A
UZ114	5160A
UZ115	5161A
UZ116	5162A
UZ117	5163A
UZ118	5164A
UZ119	5165A
UZ120	5166A
UZ210	5156A
UZ211	5157A
UZ212	5158A
UZ213	5159A
UZ214	5160A
UZ215	5161A
UZ216	5162A
UZ217	5163A
UZ218	5164A
UZ219	5165A
UZ220	5166A
UZ310	5156A
UZ311	5157A
UZ312	5158A
UZ313	5159A
UZ314	5160A
UZ315	5161A
UZ316	5162A
UZ317	5163A
UZ318	5164A
UZ319	5165A
UZ320	5166A
UZ706	5120A
UZ707	5121A
UZ708	5122A
UZ709	5124A
UZ710	5125A
UZ712	5127A
UZ713	5128A
UZ714	5129A
UZ715	5130A
UZ716	5131A
UZ718	5133A
UZ720	5135A
UZ722	5136A
UZ724	5137A
UZ727	5139A
UZ730	5141A
UZ733	5142A
UZ736	5143A
UZ740	5144A
UZ750	5147A
UZ756	5148A
UZ760	5149A
UZ775	5152A
UZ780	5153A
UZ790	5155A
UZ806	5120A
UZ807	5121A
UZ808	5122A
UZ809	5124A
UZ810	5125A
UZ812	5127A
UZ813	5128A
UZ814	5129A
UZ815	5130A
UZ816	5131A
UZ818	5133A
UZ820	5135A
UZ822	5136A
UZ824	5137A
UZ827	5139A
UZ830	5141A
UZ833	5142A
UZ836	5143A
UZ840	5144A
UZ850	5147A
UZ856	5148A
UZ860	5149A
UZ875	5152A
UZ880	5153A
UZ890	5155A
UZ906	5120A
UZ907	5121A
UZ908	5122A
UZ909	5124A
UZ910	5125A
UZ912	5127A
UZ913	5128A
UZ914	5129A
UZ915	5130A
UZ916	5131A
UZ918	5133A
UZ920	5135A
UZ922	5136A
UZ924	5137A
UZ927	5139A
UZ930	5141A
UZ933	5142A
UZ936	5143A
UZ940	5144A
UZ950	5147A
UZ956	5148A
UZ960	5149A
UZ975	5152A
UZ980	5153A
UZ990	5155A
UZ4712	5127A
UZ4812	5127A
UZ5110	5156A
UZ5111	5157A
UZ5112	5158A
UZ5113	5159A
UZ5114	5160A
UZ5115	5161A
UZ5116	5162A
UZ5117	5163A
UZ5118	5164A
UZ5119	5165A
UZ5120	5166A
UZ5210	5156A
UZ5211	5157A
UZ5212	5158A
UZ5213	5159A
UZ5214	5160A
UZ5215	5161A
UZ5216	5162A
UZ5217	5163A
UZ5218	5164A
UZ5219	5165A
UZ5220	5166A
UZ5310	5156A
UZ5311	5157A
UZ5312	5158A
UZ5313	5159A
UZ5314	5160A
UZ5315	5161A
UZ5316	5162A
UZ5317	5163A
UZ5318	5164A
UZ5319	5165A
UZ5320	5166A
UZ5706	5120A
UZ5707	5121A
UZ5708	5122A
UZ5709	5124A
UZ5710	5125A
UZ5712	5127A
UZ5713	5128A
UZ5714	5129A
UZ5715	5130A
UZ5716	5131A
UZ5718	5133A
UZ5720	5135A
UZ5722	5136A
UZ5724	5137A
UZ5727	5139A
UZ5730	5141A
UZ5733	5142A
UZ5736	5143A
UZ5740	5144A
UZ5750	5147A
UZ5756	5148A
UZ5760	5149A
UZ5775	5152A
UZ5780	5153A
UZ5790	5155A
UZ5806	5120A
UZ5807	5121A
UZ5808	5122A
UZ5809	5124A
UZ5810	5125A
UZ5812	5127A
UZ5813	5128A
UZ5814	5129A
UZ5815	5130A
UZ5816	5131A
UZ5818	5133A
UZ5820	5135A
UZ5822	5136A
UZ5824	5137A
UZ5827	5139A
UZ5830	5141A
UZ5833	5142A
UZ5836	5143A
UZ5840	5144A
UZ5850	5147A

PART NUMBER	NTE REPLACEMENT
UZ5856	5148A
UZ5860	5149A
UZ5875	5152A
UZ5880	5153A
UZ5890	5155A
UZ5906	5120A
UZ5907	5121A
UZ5908	5122A
UZ5909	5124A
UZ5910	5125A
UZ5912	5127A
UZ5913	5128A
UZ5914	5129A
UZ5915	5130A
UZ5916	5131A
UZ5918	5133A
UZ5920	5135A
UZ5922	5136A
UZ5924	5137A
UZ5927	5139A
UZ5930	5141A
UZ5933	5142A
UZ5936	5143A
UZ5940	5144A
UZ5950	5147A
UZ5956	5148A
UZ5960	5149A
UZ5975	5152A
UZ5980	5153A
UZ5990	5155A
UZ8110	5096A
UZ8111	151A
UZ8112	5097A
UZ8113	5098A
UZ8114	5099A
UZ8115	5100A
UZ8116	5101A
UZ8117	5102A
UZ8118	5103A
UZ8119	5104A
UZ8120	5105A
UZ8210	5096A
UZ8211	151A
UZ8212	5097A
UZ8213	5098A
UZ8214	5099A
UZ8215	5100A
UZ8216	5101A
UZ8217	5102A
UZ8218	5103A
UZ8219	5104A
UZ8220	5105A
UZ8706	5071A
UZ8707	138A
UZ8708	5072A
UZ8709	139A
UZ8710	140A
UZ8712	142A
UZ8713	143A
UZ8714	139A
UZ8715	145A
UZ8716	5075A
UZ8718	5077A
UZ8720	5079A
UZ8722	5080A
UZ8724	5081A
UZ8727	146A
UZ8730	5084A
UZ8733	147A
UZ8736	5085A
UZ8740	5086A
UZ8750	5089A
UZ8756	5090A
UZ8760	5091A
UZ8775	5093A
UZ8780	150A
UZ8790	5095A
UZ8806	5071A
UZ8807	138A
UZ8808	5072A
UZ8809	139A
UZ8810	140A
UZ8812	142A
UZ8813	143A
UZ8814	139A
UZ8815	145A
UZ8816	5075A
UZ8818	5077A
UZ8820	5079A
UZ8822	5080A
UZ8824	5081A
UZ8827	146A
UZ8830	5084A
UZ8833	147A
UZ8836	5085A
UZ8840	5086A
UZ8850	5089A
UZ8856	5090A
UZ8860	5091A
UZ8875	5093A
UZ8880	150A
UZ8890	5095A
UZ-3.9	5007A
UZ-4.0C	5008A
UZ-6.2B	5013A
UZ-6.8BM	5014A
UZ-9.1BM	5018A
UZ-11BL	5020A
UZ-12B	5021A
UZ-15C	145A
UZL-3.3	5066A
UZL-3.4	5066A
UZL-3.6	134A
UZL-3.9	5067A

PART NUMBER	NTE REPLACEMENT
UZL-4.3	5068A
UZL-4.7	5069A
UZL-5.1	135A
UZL-5.6	136A
UZL-6.2	137A
UZL-6.8	5071A
UZL-7.5	138A
UZL-8.2	5072A
UZL-9.1	139A
UZL-10	140A
UZL-11	5074A
UZL-12	142A
UZL-14	144A
UZL-15	145A
UZL-22	5080A
UZL-24	5081A
UZL-26	146A
UZL-27	146A
UZL-29	5084A
UZL-33	147A
UZL-36	5085A
UZL-39	5086A
UZL-51	5089A
UZL-55	148A
UZL-56	5090A
UZL-62	149A
UZL-68	5092A
UZL-82	150A
UZL-91	5095A
UZL-110	151A
UZL-115	141A
UZL-120	5097A
UZL-128	143A
UZL-130	5098A
UZL-140	5099A
UZL-150	5100A
UZL-160	5101A
UZL-163	5075A
UZL-170	5102A
UZL-176	5077A
UZL-180	5103A
UZL-190	5104A
UZL-200	5105A
UZP11B	5074A
UZP-11B	5074A
UZP-12B	142A
V0-3C	116
V0-6	116
V0-6A	125
V0-6B	116
V0-6C	116
V0-6C-401	116
V0BX4	610
V0C236-00I	221
V0C236-001	221
V0G	116
V01G	125
V03	125
V03-C	125
V03-E	116
V03C	125
V03E	125
V03E(HITACHI)	506
V03O	125
V05B	156
V05E	156
V05G	156
V06	116
V06(DIO)	116
V06(RECT)	116
V06-C	116
V06-E	116
V06-G	506
V06A	116
V06B	125
V06BX4	116
V06C	552
V06C(BOOST)	506
V06C(HITACHI)	506
V06C(LAFAYETTE)	138A
V06C(POWER RECTIFIER	116
V06C(POWER-RECTIFIER	116
V06CS	552
V06CS(FLYBACK)	552
V06E	116
V06G	125
V06G(FLYBACK)	552
V06J	506
V09	125
V09-E	506
V09-E(CENT.)	507
V09-G	552
V09A	125
V09B	125
V09C	552
V09E	552
V09E-Z	552
V09EYA	552
V09F	552
V09G	552
V09G-F2	552
V5B7710393	910
V6/2R	126
V6/2RC	102A
V6/2RJ	102A
V6/4R	126
V6/4RC	102A
V6/4RJ	102A
V6/8R	126
V6/8RJ	102A
V6/RC	102A
V6C	116
V10/1S	126
V10/1SJ	126

PART NUMBER	NTE REPLACEMENT
V10/2S	100
V10/2SJ	100
V10/15A	102
V10/15A18	102A
V10/30A	102
V10/30A18	102A
V10/50A	102
V10/50A18	102A
V11-CA	125
V11J	558
V11L	558
V11M	558
V11N	558
V13/11	100
V15/10DP	121
V15/20DP	121
V15/20R	126
V15/30DP	121
V15C200/80-VF	116
V15C200/80-V&	116
V17L	116
V18ZA1	1V010
V18ZA3	2V010
V18ZB1C	1V010
V19B	552
V19C	552
V19C-T52	552
V19CS	552
V19CSS	552
V19E	552
V19E-F	580
V19E-T52	552
V19E-Z	552
V19F	552
V19G	558
V22ZA1	1V014
V22ZA2	2V014
V22ZA3	2V014
V23C	552
V24ZA1	1V015
V24ZA4	2V015
V27ZA1	1V017
V27ZA4	2V017
V30/10DP	121
V30/20DP	121
V30/30DP	104
V30N	552
V33ZA1	1V020
V33ZA5	2V020
V33ZB1C	1V020
V39ZA1	1V025
V39ZA6	2V025
V47ZA1	1V030
V47ZA7	2V030
V50A260-36	109
V50A260-36(SI DIO)	177
V50A260-36(GE-DIO)	109
V50A260-36(GE DIO)	109
V50A260-36(SI-DIO)	177
V51	102A
V52SC1890AE-1	90
V52SC1906//1E	107
V52SC2482//-1	399
V56ZA2	1V035
V56ZA8	2V035
V58	160
V58ZA10	2V040
V60/10DP	121
V60/10P	121
V60/20DP	121
V60/20P	121
V60/30DP	121
V60/30P	121
V66	116
V68ZA2	1V040
V68ZA10	2V040
V74	109
V75	160
V78	117
V82ZA2	1V050
V82ZA12	2V050
V100ZA3	1V060
V100ZA15	2V060
V115	109
V117	109
V118	107
V119	123AP
V120	160
V120PH	108
V120RH	128
V120ZA1	1V075
V120ZA6	2V075
V126	145A
V129	107
V130LA1	1V130
V130LA2	1V130
V130LA10A	2V130
V130LA20A	524V13
V135	109
V137PL	3020
V139	128
V140	138A
V143	107
V144	124
V145	121
V146	128
V148	117
V150LA1	1V150
V150LA2	1V150
V150LA10A	2V150
V150LA20A	524V15
V150LA20B	524V15
V150ZA1	1V095
V150ZA8	2V095

PART NUMBER	NTE REPLACEMENT
V152	159
V152A	121
V154	128
V159	133
V160	142A
V162	159
V162A	121
V166	128
V167	134A
V169	123AP
V169P	3025
V170D	3021
V171	117
V172	128
V174	138A
V175	146A
V176	184
V177	128
V178	703
V178P	3007
V180	129
V180ZA1	1V115
V180ZA10	2V115
V181(BENCO)	9989
V182	725
V183	132
V184	703
V188	135A
V191	156
V205	160
V210C	116
V220	108
V221	108
V222	108
V250LA2	1V250
V250LA4	1V250
V250LA15A	2V250
V250LA20A	2V250
V250LA40	524V25
V250LA40A	524V25
V270-D1	116
V275LA2	1V275
V275LA4	1V275
V275LA20A	2V275
V275LA40A	524V27
V275LA40B	524V27
V290P	3027
V297	123AP
V300LA2	1V300
V300LA4	1V300
V301Y	552
V320LA15A	2V300
V331X	552
V405	108
V409	152
V410	159
V410A	129
V413	6408
V413K	6408
V413L	6407
V413M	6407
V413N	6408
V415	108
V417	108
V420LA20A	2V420
V420LA40B	524V42
V435	108
V435A	159
V442	116
V480LA20A	2V480
V480LA40A	2V480
V480LA80A	524V48
V623P	3130
V643	190
V654	193
V655	193
V741	193
V745	294
V761	159
V763	159
V1112	177
V1650E-1	133
V1650E-4	133
V1833E	133
V3074A20	116
V3074A21	116
V3310	156
V3510	156
V8634-3	112
V9446-4	116
V10158	116
V10916-1	109
V10916-3	109
V11189-1	116
V15920	116
V50260-10	177
V50260-16	109
V50260-22	109
V50260-32	117
V50260-35	109
V50260-36	177
V-06B	116
V-06C	116
V-1	173BP
V-11N	506
V-210C	109
V-270D1	116
V-442	116
V-1266	145A
V-8634-3	112
V-10916-3	109
VA088300	2309
VA2SA1013//1E	288
VAAD018	519

PART NUMBER	NTE REPLACEMENT
VAMV-1	116
VAR	177
VAR-1R2	177
VARIST-5	116
VB11	102A
VB100	116
VB300	116
VB400	116
VB500	116
VB600	116
VB600A	116
VB-11	116
VB-400	116
VB-600	116
VBH600	116
VBS2SC1623L51E	2408
VC2SC1623L51E	2408
VC6E	116
VCRS0037	519
VCRS0038	519
VD1E1////-1	116
VD6	116
VD10E11F	116
VD11	109
VD12	109
VD13	109
VD1150M	177
VD126MF	601
VD1120	116
VD1121	177
VD1122	601
VD1123	177
VD1124	601
VD1127	177
VD1150L	601
VD1150M	601
VD1210	605A
VD1210L	177
VD1211	605A
VD1212	177
VD1213	116
VD1220	605A
VD1220-M	605A
VD1220M	605A
VD1221	605A
VD1221L	605A
VD1222	605A
VD1223	605A
VD1251L	601
VD1271ME	519
VD1272LE	519
VD1272ME	519
VD-121C	116
VD-1121	177
VD-1122	116
VD-1123	177
VD-1124	601
VD-1221	605A
VD-S-7-013626-001	519
VE08	5304
VE108	5307
VE79092	9949
VE79093	9944
VE79141	9937
VF5-5	518
VF5-5X	518
VF5-7	518
VF5-7X	518
VF5-10	518
VF5-10X	518
VF10-5	518
VF10-5X	518
VF10-7	518
VF10-7X	518
VF10-10	518
VF10-10X	518
VF25-5	518
VF25-5X	518
VF25-7	518
VF25-7X	518
VF25-10	518
VF25-10X	518
VF579	264
VF-SD1A	506
VFA2745C	116
VFA-2745C	116
VFG2745B	104
VFG-274513	104
VFL2744K	160
VFL-2744K	126
VFP2746C	121
VFP6357C	121
VFP6537C	121
VFP-2746C	104
VFP-6537C	121
VFQ2745F	102A
VFQ-2745F	100
VFS5K	126
VFS2745	158
VFS2745J	158
VFS-2745	102A
VFS-2745J	102A
VFT2745H	102
VFT-2745H	102A
VFU2746B	121
VFU65326B	121
VFU-2746B	121
VFW2745D	160
VFW-27450	126
VFY2745E	100
VFY-2745E	100
VH048	5312
VH1CXA1011P-1	15023
VH1HD74LS221	74LS221

PART NUMBER	NTE REPLACEMENT
VH1HD74LSP	74LS136
VH1HD74S04/-1	74S04
VH1HD7406//-1	7406
VH1HD7417//-1	7417
VH1HD7426//-1	7426
VH1HD14042P-1	4042B
VH1N34///-1	109
VH1S2339MB-1	611
VH1SN74LS08-1	74LS08
VH1SN74LS32-1	74LS32
VH1TA75558S-1	928M
VH1TC4001BP-1	4001B
VH1TC4013BP-1	4013B
VH1TC4030BP-1	4030B
VH1TC4081BP-1	4081B
VH3S4M//LB1E	5457
VH354M//LB1E	5457
VH1048	5317
VHC1S2139-C-1	611
VHC1S2790-W-1	613
VHCBB109G-1	614
VHCBB109G//-1	614
VHCFV1043//-1	610
VHD02Z3R3///A	5005A
VHD1N34///-1	109
VHD1N34A/-1	109
VHD1N34A//1	109
VHD1N34A//1E	109
VHD1N34A//-1	110MP
VHD1N34A//-2	109
VHD1N60-1	109
VHD1N60-PP/1G	109
VHD1N60////-1	109
VHD1N60////-3	109
VHD1S34///-1	109
VHD1S34A//-1	109
VHD1S155V/1G	177
VHD1S1553//-1	177
VHD1S1555-R-1	177
VHD1S1555//1A	177
VHD1S1555//-1	177
VHD1S1834	116
VHD1S1834//-1	506
VHD1S1885-1	116
VHD1S1885//-1	116
VHD1S1887//-1	116
VHD1S1926-M-1	112
VHD1S2076-1	177
VHD1S2076-//-1	177
VHD1S2076//-U	519
VHD1S2230//1E	125
VHD1S2835//1E	596
VHD1S2837//1E	595
VHD1S2837//-1E	595
VHD1SS82///1A	552
VHD1SS119//1E	519
VHD1SS119//-1	519
VHD1SS198//-1	584
VHD1SS821111A	552
VHD10E1////-1	116
VHD10E1FD//-1	125
VHD10E-4////-1	116
VHD30D2FAS/-1	125
VHD134111-1	110MP
VHDCDG00///-1	177
VHDDBA40C//-1	5313
VHDISS119//1E	519
VHDIS1555-R-1	177
VHDMA151WK/-1	595
VHDS5277B//-1	116
VHE1401	6240
VHE1402	6240
VHE1403	6240
VHE1404	6240
VHE2401	6240
VHE2401R	6244
VHE2402	6240
VHE2402R	6244
VHE2403	6240
VHE2403R	6244
VHE2404	6240
VHE2404R	6244
VHEHZ6B3////1A	5070A
VHEHZ12C-2L-1	5023A
VHEHZ33-2//-1	5036A
VHERD4R7EC/-1	5009A
VHERD6R8EE/-1	5071A
VHERD27ED//-1	146A
VHEWZ-100-1F	140A
VHEWZ-100//1F	5019A
VHEWZ-197//-1	5029A
VHEWZ-1001E	5096A
VHEWZ-1001F	140A
VHEWZ-10001F	5096A
VHEXZ-090-1	139A
VHIAN262///-1	1263
VHIAN3211K/-1	1805
VHIAN6341N	1425
VHIBA6209//1E	1716
VHIBA6238AU1E	1834
VHICUP1486C-1	15042
VHICXA1011P-1	15023
VHID14071P-1	4071B
VHIHD74LS00P/	74LS00
VHIHD74LS136P	74LS136
VHIHD74LS221/	74LS221
VHIHD74S04/-1	74S04
VHIHD7406//-1	7406
VHIHD7417//-1	7417
VHIHD7426//-1	7426
VHIIPC574JT-1	615P
VHIIR3393//-1	943M
VHILA1230S/-1	788
VHILA1240//-1	1214

PART NUMBER	NTE REPLACEMENT
VHILA7016//1	1781
VHILA7016//-1	1781
VHIMN3007//-1	1641
VHIMN3101//-1	1639
VHINE646B//1F	2004
VHINE646B//-1	2004
VHINJM4558D	778A
VHINJM4558D-1	778A
VHINJM4558DX1	778A
VHIRC4558PL-1	778A
VHISN74LS08-1	74LS08
VHISTK-459/-1	1330
VHITA7120P/-1	1087
VHITA7347/-1	15045
VHITA7347P1-1	15045
VHITA7348P1-1	1826
VHITA7801OAP1	1932
VHITC0452BP-1	4052B
VHITC4001BP-1	4001B
VHITC4011BP-1	4011B
VHITC4027BP-1	4027B
VHITC4028BP-1	4028B
VHITC4052BP-1	4052B
VHITC4066BP-1	4066B
VHITC4514BP-1	4514B
VHITC4528BP-1	4528B
VHIUCP1391H-1	1668
VHIUPC146C-1	15042
VHIUPC574JT-1	615P
VHIUPC1373H-1	15004
VHIUPC1391H-1	1668
VHIUPC1406HA1	1792
VHIUPC1486C	15042
VHIUPC1486C-1	15042
VHIUPC1513H-1	15005
VHIUPD4066B-1	4066B
VHS2SF1422/1E	230
VHS3S4M//LB1E	5457
VHS3S4M/LB1E	5457
VHS34M//LB1E	5457
VHS354M//LB1E	5457
VHS6340G//1E	5457
VHSCR3AM28LB1	5457
VHSCR3AMXZ8L-B1	5457
VHSCR3AMZ8L81	5457
VHSCR3AMZ8LB1	5457
VHSCS3AMZ8LB1	399
VHSS6089///1E	230
VHSS6142GLB1E	5457
VHSS6340G//1E	5457
VHSS6340GLB1E	5457
VHSS6344G1B1E	5424
VHSS6344GLB1E	5457
VHSS6344GLBG1E	5457
VHSS6344GLD1E	5457
VHSSFORIA411E	5402
VHUPD4066B-1	4066B
VHV1S1209-1	177
VHVCDG24///-1	177
VHVHV1N4148-1	519
VJ248	5313
VL18RJ	126
VL148	5312
VL/8RJ	100
VM08	5332
VM18	5332
VM28	5332
VM48	5332
VM68	5332
VM88	5334
VM108	5334
VM204	610
VM204A	610
VM205	610
VM205A	610
VM210	610
VM210A	610
VM211	610
VM211A	610
VM216	610
VM216A	610
VM217	610
VM217A	610
VM222	610
VM222A	610
VM223	610
VM223A	610
VM228	610
VM228A	610
VM229	610
VM229A	610
VM234	610
VM234A	610
VM235	610
VM235A	610
VM304	611
VM304A	611
VM305	611
VM305A	611
VM310	611
VM310A	611
VM311	611
VM311A	611
VM316	611
VM316A	611
VM317	611
VM317A	611
VM328	611
VM328A	611
VM329	611
VM329A	611
VM334	611
VM334A	611
VM335	611

PART NUMBER	NTE REPLACEMENT
VM335A	611
VM504	613
VM504A	613
VM505	613
VM505A	613
VM510	613
VM510A	613
VM511	613
VM511A	613
VM516	613
VM516A	613
VM517	613
VM517A	613
VM522	613
VM522A	613
VM523	613
VM523A	613
VM528	613
VM528A	613
VM529	613
VM529A	613
VM534	613
VM534A	613
VM535	613
VM535A	613
VM604	614
VM604A	614
VM605	614
VM605A	614
VM610	614
VM610A	614
VM611	614
VM611A	614
VM616	614
VM616A	614
VM617	614
VM617A	614
VM622	614
VM622A	614
VM623	614
VM623A	614
VM628	614
VM628A	614
VM629	614
VM629A	614
VM634	614
VM634A	614
VM635	614
VM20233	124
VM30203	121
VM30209	123AP
VM30233	124
VM30234	124
VM30241	123AP
VM30242	123AP
VM30244	102A
VM30245	124
VM-0.09M	113A
VM-28	5332
VM-20233	124
VM-30203	121
VM-30209	123AP
VM-30234	124
VM-30241	123AP
VM-30242	123AP
VM-30244	102A
VM-30245	124
VM-HS9/1	113A
VM-PH9D522/1	116
VM-PH11D522/1	116
VM-PH90522/1	116
VM-TC0.2P11/2	116
VM-TC02P11/2	116
VMPH11D522-1	116
VMT-02	531
VMT-05	522
VMT-13	539
VN0330N5	67
VN0330N5G	67
VN0340N5	67
VN0340N5G	67
VN0335N5	67
VN0335N5G	67
VN2SF1422	230
VN4502D	2380
VN5002D	2380
VO3-C	116
VO3-G	125
VO3C	116
VO3G	116
VO5E	156
VO6-C	116
VO6B	116
VO6C	116
VO6CS	552
VO6J	116
VO9C	552
VO9E	552
VO9G	552
VO9G-F2	552
VO9G-TA	552
VO9GTA	552
VO-3C	125
VO-5E	116
VO-6A	116
VO-6C	116
VO-9C	506
VOG	116
VR1B	552
VR1D	552
VR1G	552
VR1G(RECT)	552
VR1J	552
VR1J(RECT)	552
VR2D	552
VR5.6	136A
VR5.6A	136A
VR5.6B	136A
VR9.1	139A
VR9.1A	139A
VR9.1B	139A
VR9B	139A
VR10	140A
VR10A	140A
VR10B	140A
VR10E	5186A
VR10F	5188A
VR11	141A
VR11A	141A
VR11B	141A
VR12	142A
VR12A	142A
VR12B	142A
VR12E	5188A
VR12F	5191A
VR13	143A
VR13A	143A
VR13B	143A
VR14	144A
VR14A	144A
VR14B	144A
VR15	145A
VR15A	145A
VR15B	145A
VR15E	5191A
VR15F	5130A
VR18E	5194A
VR18F	5133A
VR22E	5197A
VR22F	5136A
VR27	146A
VR27A	146A
VR27B	146A
VR27E	5200A
VR27F	5139A
VR33	147A
VR33A	147A
VR33B	147A
VR56	148A
VR56A	148A
VR56B	148A
VR62	149A
VR62A	149A
VR62B	149A
VR82	150A
VR82A	150A
VR82B	150A
VR110	151A
VR110A	151A
VR110B	151A
VR-9.1	139A
VR-14	145A
VR-D1N34A///-1	109
VRD1N34A///-1	109
VRD1SS119//-1	519
VS048	5312
VS1	116
VS2A71BS	160
VS2A562-0/1E	290A
VS2C454-C/1E	85
VS2C1740SQR1E3	85
VS2C2482//-1	399
VS2C2610/-1E	399
VS2D1650//-1	2302
VS2S669D//1E	373
VS2S1013//1E	32
VS2SA71B	160
VS2SA71BS	160
VS2SA103	160
VS2SA128V	127
VS2SA378	160
VS2SA379	160
VS2SA385	102
VS2SA385L	126
VS2SA448	127
VS2SA495-0/1E	159
VS2SA495-0/1E	194
VS2SA495-0/-1	159
VS2SA495-Y/1E	159
VS2SA562-0/1E	290A
VS2SA562-0/1E	290A
VS2SA562-Q/1E	290A
VS2SA562-Y/1E	290
VS2SA562T0/-1	290A
VS2SA562T-0/1E	290A
VS2SA562T-Q/1E	290A
VS2SA562T0/-1	290A
VS2SA673-B/1E	290A
VS2SA673-C/1A	290A
VS2SA673-C/1E	290A
VS2SA673A-B/1E	290A
VS2SA715-C1-A	374
VS2SA715-C/-A	185
VS2SA733AQ/-1	290A
VS2SA738-C/-1	294
VS2SA740///1E	292
VS2SA812-M51E	2409
VS2SA812-M151E	2359
VS2SA844-D/-1	129
VS2SA844D/-2	234
VS2SA854-Q/1E	290A
VS2SA854T0/-1	290A
VS2SA933SQR1E	290A
VS2SA937-Q/-1	17
VS2SA950-Y11E	290A
VS2SA950-Y/1E	294
VS2SA952LK/-1	290A
VS2SA966-Y/-1	294
VS2SA968Y//-1	398
VS2SA988///1E	288
VS2SA1013//1E	32
VS2SA1013///E	32
VS2SA1015/1E	290A
VS2SA1015G/1E	290A
VS2SA1015LGR1	290A
VS2SA1015Y/1E	290A
VS2SA1015Y/2E	290A
VS2SA1015Y/-1E	290A
VS2SA1020Y/-1	25
VS2SA1029C-1E	290A
VS2SA1037KQ-1	2409
VS2SA5620/1E	290A
VS2SB126	121
VS2SB126F	121
VS2SB126V	121
VS2SB171	102
VS2SB172	102
VS2SB172F	158
VS2SB172FN	158
VS2SB176	102
VS2SB178	102
VS2SB178A	102
VS2SB324	123AP
VS2SB355-D/-1	104
VS2SB525-D/-1	294
VS2SB561-C/-1	298
VS2SB568///-1	292
VS2SC206	123AP
VS2SC208	123AP
VS2SC246-C-1	2408
VS2SC288A	123AP
VS2SC324H	123AP
VS2SC371-R-1	199
VS2SC372-Y/1E	123AP
VS2SC373-//1E	199
VS2SC373-G/-1	199
VS2SC373//-1E	199
VS2SC373G-1	199
VS2SC374-B-1	199
VS2SC380/Y//1	85
VS2SC380A0/1E	85
VS2SC380AY/1E	85
VS2SC383-W/1E	199
VS2SC383-WT-1	129
VS2SC385L	160
VS2SC394-0-1	229
VS2SC394-0-1	161
VS2SC394-Y-1	229
VS2SC454-B/1E	289
VS2SC454-C/1A	289
VS2SC454-C/1E	85
VS2SC454-C/3A	289
VS2SC454-C/E	85
VS2SC458	123AP
VS2SC458-C/1A	85
VS2SC458-C/1E	85
VS2SC458-D/-1	85
VS2SC458LGD-1	85
VS2SC460-B/1E	85
VS2SC460B-1	229
VS2SC464-B/-1	85
VS2SC481-1	195A
VS2SC495-0/1E	295
VS2SC495T-1	295
VS2SC495T/1	295
VS2SC496-Y/-1	295
VS2SC535-B/1A	107
VS2SC535-B/1E	107
VS2SC535-B/-1	107
VS2SC535-C/-1	107
VS2SC538	123AP
VS2SC645A	123AP
VS2SC669C//1E	373
VS2SC669D/1E	373
VS2SC681A-R1A	283
VS2SC681A-Y2E	163A
VS2SC684	107
VS2SC717///-1	161
VS2SC732-V1F	199
VS2SC732-VIF	123AP
VS2SC732BTM-1	199
VS2SC733B-1	199
VS2SC735-Y-1	289
VS2SC784-R1F	229
VS2SC784R1F	161
VS2SC794LB1E	373
VS2SC854-Q/1E	290A
VS2SC945AP/-1	85
VS2SC945AQ/-1	85
VS2SC945LK-1	199
VS2SC945LP-1	199
VS2SC975///-1	373
VS2SC983-O/2E	171
VS2SC1061-C1A	152
VS2SC1162-C3A	184
VS2SC1162WB-3	184
VS2SC1166-0-1	123AP
VS2SC1166-Y-1	297
VS2SC1166Y-1	123AP
VS2SC1172-/1E	238
VS2SC1173-Y-3	152
VS2SC1174-/1E	238
VS2SC1213-C1A	289A
VS2SC1213-C1E	289A
VS2SC1213-C/1A	289
VS2SC1213-CIA	289A
VS2SC1213AC1A	289A
VS2SC1213AC/1A	289
VS2SC1213AC/A	289A
VS2SC1237-1	236
VS2SC1237-1F	235
VS2SC1237-/1F	235
VS2SC1335D/1	123AP
VS2SC1335D/-1	199
VS2SC1335D/-1E	199
VS2SC1419-K1F	152
VS2SC1447-/1E	198
VS2SC1447LB1E	376
VS2SC1514-/1E	376
VS2SC1514/-1	376
VS2SC1514//-1	376
VS2SC1514BK1E	198
VS2SC1514BK-1E	198
VS2SC1569/1K	376
VS2SC1569K/1E	376
VS2SC1623L51E	2408
VS2SC1627A	128
VS2SC1627Y	128
VS2SC1664//-1	294
VS2SC1674L/-1	229
VS2SC1675M-1	229
VS2SC1681G/1E	199
VS2SC1723-1	198
VS2SC1723//-1	198
VS2SC1740SQR1E	85
VS2SC1741-1	293
VS2SC1794LB1E	373
VS2SC1815GR-1	85
VS2SC1815GW-1	85
VS2SC1815LGR1	85
VS2SC1815YW1E	85
VS2SC1815YW-1	85
VS2SC1815YW/-1	85
VS2SC1826-Y1A	196
VS2SC1827//1E	291
VS2SC1827Y/1E	291
VS2SC1829/1E	162
VS2SC1841-E-1	90
VS2SC1855//-1	108
VS2SC1855///-1	229
VS2SC1890A0.1	90
VS2SC1890A/1E	199
VS2SC1890AD-1	90
VS2SC1890AE-1	90
VS2SC1906//1A	107
VS2SC1906//1E	107
VS2SC1906//-3	107
VS2SC1906///1E	107
VS2SC1921//1E	399
VS2SC1921//-1E	322
VS2SC1923-0-1	229
VS2SC1923-01E	107
VS2SC1923R/-1	229
VS2SC1942//1E	165
VS2SC1959Y	85
VS2SC1959Y/1E	85
VS2SC1983//-1	56
VS2SC1983//-2	56
VS2SC1985//-1	196
VS2SC2001-M-1	293
VS2SC2001LK-1	85
VS2SC2001LX-1	85
VS2SC2002-K1A	85
VS2SC2002-K/A	85
VS2SC2021-Q-1	85
VS2SC2023-/1E	394
VS2SC2059KN1E	2408
VS2SC2068LB1E	198
VS2SC2073	375
VS2SC2073/3E	291
VS2SC2073//1E	291
VS2SC2073//3E	291
VS2SC2073LB2E	291
VS2SC2073LBE	291
VS2SC2120Y/-1	289A
VS2SC2120Y/-1A	289A
VS2SC2120Y/-A	289A
VS2SC2229Q/1E	399
VS2SC2229Y/1E	399
VS2SC2231Y/1E	198
VS2SC2236/-Y	382
VS2SC2236Q/-1	382
VS2SC2236Y1-1	382
VS2SC2236Y/-1	382
VS2SC2240BL-1	199
VS2SC2271-D1A	399
VS2SC2290/-1	399
VS2SC2371K	157
VS2SC2371K/1E	157
VS2SC2373L/1E	379
VS2SC2383//1E	31
VS2SC2412KQ-1	2408
VS2SC2458Y/-1	85
VS2SC2462-C-1	2408
VS2SC2481-0	373
VS2SC2481//-1	399
VS2SC24810/1E	373
VS2SC2481Y	373
VS2SC2481Y/1E	373
VS2SC2482	373
VS2SC2482//-1	399
VS2SC2482//-1J	399
VS2SC2610/1E	399
VS2SC2610/-1E	399
VS2SC2610BK/1E	399
VS2SC2610BK//1E	399
VS2SC2610K/1E	399
VS2SC2610Y/-1	399
VS2SC2611/1A	157
VS2SC2611/-1A	157
VS2SC2611/-1E	157
VS2SC2611//-1	157
VS2SC2655(Y)	293
VS2SC2655Y/-1	293
VS2SC2671K/1E	157
VS2SC2712Y/-1	2408
VS2SC2794LB1E	373
VS2SC2827//1E	379
VS2SC3299Y/1E	377
VS2SC3299Y/-1	377
VS2SC3886A/1E	2324
VS2SC14471B1E	198
VS2SC16742/-1	229
VS2SC17235/-1	198
VS2SC18150/1E	85
VS2SC22290/1A	399
VS2SC22290/1E	399
VS2SC22290/-1	399
VS2SC22360/-1	382
VS2SC22900/-1	399
VS2SC273511-1	2402
VS2SD227V-1	123AP
VS2SD235LBY-1	152
VS2SD235LBY-2	152
VS2SD357-D/-1	291
VS2SD467-C/-1	128
VS2SD468-C/-1	293
VS2SD471-KL1E	293
VS2SD471-S/-1	289
VS2SD476-C/-1	196
VS2SD478-YL2E	375
VS2SD478-YL-ZE	291
VS2SD478SYL2E	291
VS2SD478YL2E	291
VS2SD604-//1E	162
VS2SD655-DE1E	315
VS2SD666-C/-1	324
VS2SD666A-C1A	194
VS2SD669-C/1E	373
VS2SD669-D/1E	373
VS2SD669C//1E	373
VS2SD669D	373
VS2SD669D//1E	373
VS2SD699-C/1E	373
VS2SD699C	373
VS2SD724///1A	291
VS2SD758-C/1E	376
VS2SD764///-1	389
VS2SD794A//1E	184
VS2SD794ALB1E	184
VS2SD794LB1E	184
VS2SD794LBE1E	184
VS2SD869-//1E	89
VS2SD869//1E	89
VS2SD869Y	89
VS2SD870///-1	89
VS2SD871///-1	89
VS2SD898//1E	89
VS2SD898A-/1E	89
VS2SD898B-13//1E	89
VS2SD898B-/1E	89
VS2SD906///1E	89
VS2SD906///-1	89
VS2SD906///-1E	89
VS2SD906///-E	89
VS2SD975///-1	373
VS2SD1190//1E	263
VS2SD1264//1E	375
VS2SD1267-P1E	377
VS2SD1426//1E	2302
VS2SD1554//1E	2302
VS2SD1650CA1E	2302
VS2SD2095//1E	2531
VS2SD2125//1E	2531
VS2SD2095111E	2531
VS2SF1422/1E	230
VS2SK30AG//1E	459
VS2SK30AG//2E	459
VS2SK43////1A	312
VS2SK49F-1	312
VS2SK55-E//-1	312
VS9-0001-911	116
VS9-0002-911	116
VS9-0003-911	125
VS9-0003-913	199
VS9-0004-911	125
VS9-0004-923	234
VS9-0005-911	116
VS9-0005-913	123AP
VS9-0006-911	116
VS9-0006-913	123AP
VS9-0007-911	116
VS9-0008-911	177
VS9-0008-923	234
VS9-0014-911	177
VS22SC535-B/1A	107
VS22SC945AQ/-1	85
VS120	116
VS202	116
VS500	5952
VS600	5952
VS1048	5317
VS-0A70	109
VS-1	116
VS-1N82AG	112
VS-2SA71	160
VS-2SA71B	160
VS-2SA71BS	160
VS-2SA103	160
VS-2SA288A	123AP
VS-2SA358	126
VS-2SA378	126
VS-2SA379	126
VS-2SA385	126
VS-2SA385L	160
VS-2SB126	121
VS-2SB126F	127
VS-2SB126FV	127
VS-2SB126V	127
VS-2SB128	127
VS-2SB128V	127
VS-2SB171	102A
VS-2SB172	102A
VS-2SB172FN	102A
VS-2SB176	102A
VS-2SB178	102A
VS-2SB178A	102A
VS-2SB324	102A
VS-2SB448	127
VS-2SC41	280
VS-2SC58	154
VS-2SC58A	154
VS-2SC58B	154
VS-2SC58C	154
VS-2SC206	108
VS-2SC208	108
VS-2SC288A	108
VS-2SC324	229
VS-2SC324H	123AP
VS-2SC371-R-1	229
VS-2SC385L	160
VS-2SC446	161
VS-2SC458	123AP
VS-2SC466	229
VS-2SC526	198
VS-2SC538	123AP
VS-2SC563	108
VS-2SC645	108
VS-2SC645A	108
VS-2SC645B	229
VS-2SC645C	229
VS-2SC683	161
VS-2SC683Y	229
VS-2SC684	108
VS-2SC687	162
VS-2SC762	108
VS-2SC-458	123AP
VS-102	116
VS-CS1255H	128
VS-CS1255HF	128
VS-CS1256HG	129
VS-DG1N	116
VS-DG1NR	116
VS-FR-1	116
VS-FR-1P	116
VS-FR-1U	116
VS-FR1	116
VS-FR1P	116
VS-FT-1N	116
VS-PC02P11/2	116
VS-PH9D522/1	116
VS-RD11AM	5074A
VS-SD-1B	506
VS-SD-1Z	116
VS-SD-82A	112
VS-SD1	506
VS-SD1B	506
VS-SD82A	112
VS-TC0.2P11/2	116
VS-TC0-2P11/2	116
VS-TC02P11/2	116
VSBF494-B//-1	229
VSBF495-C//-1	229
VSC1815GW-1	85
VSCS1255H	128
VSCS1256HG	159
VSDTA114EK/-1	2415
VSDTA124ES/-1	2358
VSDTA144ES/-1	2408
VSDTC114EK/-1	2414
VSDTC114ES/-1	2355
VSDTC124ES/-1	2357
VSDTC124F//-1	2357
VSDTC144EK/-1	2418
VSDTC144ES/-1	2359
VSDTC144F//-1	2359
VSF2745	100
VSFR1	116
VSFR1P	116
VSFT1N	116
VSG-20024	116
VSK12	6087
VSK13	6085
VSK14	6085
VSK120	585
VSK130	585
VSK140	585
VSK1520	6084
VSK1530	6084
VSK1540	6084
VSK3020S	6084
VSK3030S	6084
VSK3040S	6084
VSK4020	6094
VSK4030	6094
VSK4040	6094
VSPH9D522/1	116
VSS6142GLB1E	5457
VSSD1B	116
VSSD1Z	116
VSTC02P11/2	116
VTA1112	3036
VX3375	186
VX3733	152
VZ061	5012A
VZ6.2V	5013A
VZ82CH	5072A
VZ-050	135A
VZ-050A	135A
VZ-050B	135A
VZ-050C	135A
VZ-050D	135A
VZ-050E	135A
VZ-090	5018A
VZ-090A	5018A
VZ-090B	5018A
VZ-090C	5018A
VZ-090D	5018A
VZ-090E	5018A
VZ-052	5010A
VZ-052A	5010A
VZ-052B	5010A
VZ-052C	5010A
VZ-052D	5010A
VZ-052E	5010A
VZ-054	5011A
VZ-056	5011A
VZ-056A	136A
VZ-056B	136A
VZ-056C	136A
VZ-056D	136A
VZ-056E	136A
VZ-058	5012A
VZ-061	5012A
VZ-061A	137A
VZ-061B	137A
VZ-061C	137A
VZ-061D	137A
VZ-061E	137A
VZ-063	5013A
VZ-063A	5013A
VZ-063B	5013A
VZ-063C	5013A
VZ-063D	5013A
VZ-063E	5013A
VZ-065	5014A
VZ-067	5014A
VZ-069	5014A
VZ-071	5015A
VZ-073	5015A
VZ-073A	5015A
VZ-073B	5015A
VZ-073C	5015A
VZ-073D	5015A
VZ-073E	5015A
VZ-075	5015A
VZ-075A	5015A
VZ-075B	5015A
VZ-075C	5015A
VZ-075D	5015A
VZ-075E	5015A
VZ-077	5015A
VZ-077A	5015A
VZ-077B	5015A
VZ-077C	5015A
VZ-077D	5015A
VZ-077E	5015A
VZ-079	5016A
VZ-079A	5016A
VZ-079B	5016A
VZ-079C	5016A
VZ-079D	5016A
VZ-079E	5016A
VZ-081	5016A
VZ-081A	5016A
VZ-081B	5016A
VZ-081C	5016A
VZ-081D	5016A
VZ-081E	5016A
VZ-083	5016A
VZ-083A	5016A
VZ-083B	5016A
VZ-083C	5016A
VZ-083D	5016A
VZ-083E	5016A
VZ-085	5017A
VZ-085A	5018A
VZ-085B	5017A
VZ-085C	5017A
VZ-085D	5017A
VZ-085E	5017A
VZ-088	5017A
VZ-092	5018A
VZ-092A	5018A
VZ-092B	5018A
VZ-092C	5018A
VZ-092D	5018A
VZ-092E	5018A
VZ-094	5018A
VZ-094A	5018A
VZ-094B	5018A
VZ-094C	5018A
VZ-094D	5018A
VZ-094E	5018A
VZ-096	5019A
VZ-096A	5019A
VZ-096B	5019A
VZ-096C	5019A
VZ-096D	5019A
VZ-096E	5019A
VZ-098	5019A
VZ-098A	5019A
VZ-098B	5019A
VZ-098C	5019A
VZ-098D	5019A
VZ-098E	5019A
VZ-15B	5024A
VZ-100	5019A
VZ-100A	5019A
VZ-100B	5019A
VZ-100C	5019A
VZ-100D	5019A
VZ-100E	5019A
VZ-105	5020A
VZ-105A	5020A
VZ-105B	5020A
VZ-105C	5020A

PART NUMBER	NTE REPLACEMENT
VZ-105D	5020A
VZ-105E	5020A
VZ-110	5020A
VZ-110A	5020A
VZ-110B	5020A
VZ-110C	5020A
VZ-110D	5020A
VZ-110E	5020A
VZ-110F	5020A
VZ-115	141A
VZ-115A	141A
VZ-115B	141A
VZ-115C	141A
VZ-115D	141A
VZ-115E	141A
VZ-120	5021A
VZ-120A	5021A
VZ-120B	5021A
VZ-120C	5021A
VZ-120D	5021A
VZ-120E	5021A
VZ-125	5022A
VZ-125A	143A
VZ-125B	143A
VZ-125C	143A
VZ-125D	143A
VZ-125E	143A
VZ-130	5022A
VZ-130A	5022A
VZ-130B	5022A
VZ-130C	5022A
VZ-130D	5022A
VZ-130E	5022A
VZ-135	5023A
VZ-135A	5023A
VZ-135B	5023A
VZ-135E	5023A
VZ-140	5023A
VZ-140A	5023A
VZ-140B	5023A
VZ-140C	5023A
VZ-140D	5023A
VZ-140E	5023A
VZ-145	5024A
VZ-145A	5024A
VZ-145B	5024A
VZ-145C	5024A
VZ-145D	5024A
VZ-145E	5024A
VZ-150	5024A
VZ-150A	5024A
VZ-150B	5024A
VZ-150C	5024A
VZ-150D	5024A
VZ-150E	5024A
VZ-157	5025A
VZ-157A	5025A
VZ-157B	5025A
VZ-157C	5025A
VZ-157D	5025A
VZ-157E	5025A
VZ-162	5025A
VZ-162A	5025A
VZ-162B	5025A
VZ-162C	5025A
VZ-162D	5025A
VZ-162E	5025A
VZ-167	5026A
VZ-167A	5026A
VZ-167B	5026A
VZ-167C	5026A
VZ-167D	5026A
VZ-167E	5026A
VZ-172	5026A
VZ-172A	5026A
VZ-172B	5026A
VZ-172C	5026A
VZ-172D	5026A
VZ-172E	5026A
VZ-177	5027A
VZ-177A	5077A
VZ-177B	5077A
VZ-177C	5077A
VZ-177D	5077A
VZ-177E	5077A
VZ-182	5027A
VZ-182A	5027A
VZ-182B	5027A
VZ-182C	5027A
VZ-182D	5027A
VZ-182E	5027A
VZ-187	5028A
VZ-192	5028A
VZ-192A	5028A
VZ-192B	5028A
VZ-192C	5028A
VZ-192D	5028A
VZ-192E	5028A
VZ-197	5029A
VZ-230	5081A
VZ-230A	5081A
VZ-230B	5081A
VZ-230C	5081A
VZ-230D	5081A
VZ-230E	5081A
VZ-240	5081A
VZ-240A	5081A
VZ-240B	5081A
VZ-240C	5081A
VZ-240D	5081A
VZ-240E	5081A
VZ-250	5081A
VZ-250A	5081A
VZ-250B	5081A
VZ-250C	5081A
VZ-250D	5081A
VZ-250E	5081A
VZ-260	146A
VZ-260A	146A
VZ-260B	146A
VZ-260C	146A
VZ-260D	146A
VZ-260E	146A
VZ-270	146A
VZ-270A	146A
VZ-270B	146A
VZ-270C	146A
VZ-270D	146A
VZ-270E	146A
VZ-280	5084A
VZ-280A	5084A
VZ-280B	5084A
VZ-280C	5084A
VZ-280D	5084A
VZ-280E	5084A
VZ-290	5084A
VZ-290A	5084A
VZ-290B	5084A
VZ-290C	5084A
VZ-290D	5084A
VZ-290E	5084A
VZ-300	5084A
VZ-300A	5084A
VZ-300B	5084A
VZ-300C	5084A
VZ-300D	5084A
VZ-300E	5084A
VZ-320	147A
VZ-320A	147A
VZ-320B	147A
VZ-320C	147A
VZ-320D	147A
VZ-320E	147A
VZ-330	147A
VZ-330A	147A
VZ-330B	147A
VZ-330C	147A
VZ-330D	147A
VZ-330E	147A
VZ-340	147A
VZ-340A	147A
VZ-340B	147A
VZ-340C	147A
VZ-340D	147A
VZ-340E	147A
W005	5304
W005M	5304
W0-6A	116
W0-6B	116
W0-61	137A
W01	5304
W01M	5304
W02	5304
W02M	5304
W03B	116
W03C	116
W03M	116
W04	167
W04M	5304
W05	166
W06	5305
W06-A	116
W06-B	116
W06A	552
W06A-T3	552
W06A-Z	116
W06B	116
W06C	116
W06M	5305
W07.5	5015A
W08	5306
W08M	5306
W09C	552
W075	5015A
W1	100
W1-050	135A
W1-090	139A
W1-052	135A
W1-054	136A
W1-056	136A
W1-058	136A
W1-061	137A
W1-063	137A
W1-065	137A
W1-071	138A
W1-073	138A
W1-075	138A
W1-077	138A
W1-079	5072A
W1-081	5072A
W1-083	5072A
W1-085	5072A
W1-088	139A
W1-092	139A
W1-094	139A
W1-098	140A
W1-100	140A
W1-110	5074A
W1-115	141A
W1-120	142A
W1-125	143A
W1-130	143A
W1-140	144A
W1-150	145A
W1-157	5075A
W1-162	5075A
W1-167	5075A
W1-172	5077A
W1-177	5077A
W1-182	5077A
W1-230	5081A
W1-240	5081A
W1-250	5081A
W1-260	146A
W1-270	146A
W1-290	5084A
W1-300	5084A
W1-330	147A
W1-340	147A
W1A	133
W1P	312
W1R	177
W1R(DIODE)	177
W1R(SCR)	5404
W1U	222
W1U-1	222
W1W	5444
W2	101
W2-050	135A
W2-090	139A
W2-052	136A
W2-054	136A
W2-056	136A
W2-058	136A
W2-061	137A
W2-063	137A
W2-065	137A
W2-071	138A
W2-073	138A
W2-075	138A
W2-077	138A
W2-079	5072A
W2-081	5072A
W2-083	5072A
W2-085	5072A
W2-088	139A
W2-092	139A
W2-094	139A
W2-098	140A
W2-100	140A
W2-110	5074A
W2-115	141A
W2-125	143A
W2-130	143A
W2-140	144A
W2-150	145A
W2-157	5075A
W2-167	5075A
W2-172	5077A
W2-177	5077A
W2-182	5077A
W2-230	5081A
W2-240	5081A
W2-250	5081A
W2-260	146A
W2-270	146A
W2-290	5084A
W2-300	5084A
W2-330	147A
W2-340	146A
W2BC25E	5700
W2BE25E	5700
W2BH25C	5702
W2BH25E	5702
W3	102A
W3D	5633
W4	103A
W4-050	135A
W4-090	139A
W4-052	135A
W4-054	136A
W4-056	136A
W4-058	136A
W4-061	161
W4-063	137A
W4-065	137A
W4-071	138A
W4-073	138A
W4-075	138A
W4-077	138A
W4-079	5072A
W4-081	5072A
W4-083	5072A
W4-085	5072A
W4-088	139A
W4-092	139A
W4-094	139A
W4-098	140A
W4-100	140A
W4-110	5074A
W4-115	141A
W4D45C	6230
W4D45D	6230
W4D45M	6230
W4D45N	6230
W4D45P	6230
W4D45PB	6230
W4D80C	6230
W4D80D	6230
W4D80M	6230
W4D80N	6230
W4D80P	6230
W4D80PB	6230
W4DA40C	5711
W4DA40D	5711
W4DA40M	5711
W4DA40N	5711
W4DA40P	5711
W4DA40PB	5711
W4DA55C	5711
W4DA55D	5711
W4DA55M	5711
W4DA55N	5711
W4DA55P	5711
W4DA55PB	5711
W4DB40C	5712
W4DB40D	5712
W4DB40M	5712
W4DB40N	5712
W4DB40P	5712
W4DB40PB	5712
W4DB55C	5712
W4DB55D	5712
W4DB55M	5712
W4DB55N	5712
W4DB55P	5712
W4DB55PB	5712
W4DC40C	5710
W4DC40D	5710
W4DC40M	5710
W4DC40N	5710
W4DC40P	5710
W4DC40PB	5710
W4DC55C	5710
W4DC55D	5710
W4DC55M	5710
W4DC55N	5710
W4DC55P	5710
W4DC55PB	5710
W5	104
W6	105
W6-120	142A
W6-125	143A
W6-130	143A
W6-140	144A
W6-150	145A
W6-157	5075A
W6-162	5075A
W6-167	5075A
W6-172	5077A
W6-177	5077A
W6-182	5077A
W6-230	5081A
W6-240	5081A
W6-250	5081A
W6-260	146A
W6-270	146A
W6-290	5084A
W6-300	5084A
W6-330	147A
W6-340	147A
W7	106
W7-120	142A
W7-125	143A
W7-130	143A
W7-140	144A
W7-150	145A
W7-157	5075A
W7-162	5075A
W7-167	5075A
W7-172	5077A
W7-177	5077A
W7-182	5077A
W7-230	5081A
W7-240	5081A
W7-250	5081A
W7-260	146A
W7-270	146A
W7-290	5084A
W7-300	5084A
W7-330	147A
W7-340	147A
W8	108
W8-050	135A
W8-090	139A
W8-052	135A
W8-054	136A
W8-056	136A
W8-058	136A
W8-061	137A
W8-063	137A
W8-065	137A
W8-071	138A
W8-073	138A
W8-075	138A
W8-077	138A
W8-079	5072A
W8-081	5072A
W8-083	5072A
W8-085	5072A
W8-088	139A
W8-092	139A
W8-094	139A
W8-098	140A
W8-100	140A
W8-110	5074A
W8-115	141A
W8-120	142A
W8-125	143A
W8-130	143A
W8-140	144A
W8-150	145A
W8-157	5075A
W8-162	5075A
W8-167	5075A
W8-172	5077A
W8-177	5077A
W8-182	5077A
W8-230	5081A
W8-240	5081A
W8-250	5081A
W8-260	146A
W8-270	146A
W8-300	5084A
W8-330	147A
W8-340	147A
W8-390	5084A
W9	121
W9-050	135A
W9-090	139A
W9-054	136A
W9-056	136A
W9-058	136A
W9-061	137A
W9-063	137A
W9-065	137A
W9-071	138A
W9-073	138A
W9-075	138A
W9-077	138A
W9-079	5072A
W9-081	5072A
W9-083	5072A
W9-085	5072A
W9-088	139A
W9-092	139A
W9-094	139A
W9-098	140A
W9-100	140A
W9-110	5074A
W9-115	141A
W9-120	142A
W9-125	143A
W9-130	143A
W9-140	144A
W9-150	145A
W9-157	5077A
W9-162	5077A
W9-167	5077A
W9-172	5077A
W9-177	5077A
W9-182	5077A
W9-230	5081A
W9-240	5081A
W9-250	5081A
W9-260	146A
W9-270	146A
W9-290	5084A
W9-300	147A
W9/340	147A
W9MP	121MP
W10	5307
W10M	5307
W11	124
W12	160
W13	127
W14	128
W15	129
W16	130
W16MP	130MP
W17	131
W17MP	131MP
W18	152
W19	153
W20	123AP
W21	159
W22	160
W23	161
W24	123AP
W25	158
W26	157
W27	155
W28	154
W29	107
W50	130
W55	148A
W65	129
W89	159
W98	123A
W101	123A
W103	123A
W103-254	116
W104	123A
W107	123A
W108	123AP
W109	123AP
W110	5304
W111	123AP
W116	123AP
W118	130
W126	85
W143	123A
W145	123AP
W148	123A
W150	123AP
W153	189
W1232	937M
W1401	123A
W1402	123AP
W1403	123A
W1404	123AP
W1405	123AP
W1406	123A
W1407	123AP
W1408	123AP
W1409	123A
W1410	123AP
W1411	123AP
W1412	123A
W1413	123AP
W1415	123A
W1416	123AP
W1417	123AP
W1418	123A
W1424	46
W1425	85
W1426	123AP
W1428	123A
W1500	234
W1501	234
W1502	159
W1503	234
W1600	128
W1601	128
W1602	128
W1603	154
W1604	129
W1605	181
W1701	159
W1702	129
W1800	130
W1801	130
W1802	245
W1803	163A
W1804	245
W1901	180
W2000	133
W2000(ORGAN)	461
W2001	461
W2001(ORGAN)	461
W2010	6401
W2011	6400A
W2021	5635
W2200	246
W2201	180
W2202	244
W4002	116
W5696A	610
W-005	166
W-06A	116
W-Z063	5013A
W/6A	116
WA0A-90	177
WA072	8070
WA077	8076
WA084	8081
WA093	8090
WA098	8096
WA100	8098
WA109	8108
WA117	8115
WA126	8125
WA141	8139
WA152	8149
WA-050	135A
WA-050A	135A
WA-050B	135A
WA-050D	135A
WA-090	139A
WA-090A	139A
WA-090B	139A
WA-090C	139A
WA-090D	139A
WA-052	135A
WA-052A	135A
WA-052B	135A
WA-052C	135A
WA-052D	135A
WA-054	136A
WA-054A	136A
WA-054B	136A
WA-054C	136A
WA-054D	136A
WA-056	136A
WA-056A	136A
WA-056B	136A
WA-056C	136A
WA-056D	136A
WA-058	136A
WA-058A	136A
WA-058B	136A
WA-058C	136A
WA-058D	136A
WA-061	137A
WA-061A	137A
WA-061B	137A
WA-061C	137A
WA-063	137A
WA-063A	137A
WA-063B	137A
WA-063C	137A
WA-063D	137A
WA-065	137A
WA-065A	137A
WA-065B	137A
WA-065C	137A
WA-065D	137A
WA-071	138A
WA-071A	138A
WA-071B	138A
WA-071C	138A
WA-071D	138A
WA-073	138A
WA-073A	138A
WA-073B	138A
WA-073C	138A
WA-073D	138A
WA-075	138A
WA-075A	138A
WA-075B	138A
WA-075C	138A
WA-075D	138A
WA-077	138A
WA-077A	138A
WA-077B	138A
WA-077C	138A
WA-077D	138A
WA-079	5072A
WA-079A	5072A
WA-079B	5072A
WA-079C	5072A
WA-079D	5072A
WA-081	5072A
WA-081A	5072A
WA-081B	5072A
WA-081C	5072A
WA-081D	5072A
WA-083	5072A
WA-083A	5072A
WA-083B	5072A
WA-083C	5072A
WA-083D	5072A
WA-085	5072A
WA-085A	5072A
WA-085B	5072A
WA-085C	5072A
WA-085D	5072A
WA-088	139A
WA-088A	139A
WA-088B	139A
WA-088C	139A
WA-088D	139A
WA-092	139A
WA-092A	139A
WA-092B	139A
WA-092C	139A
WA-092D	139A
WA-094	139A
WA-094A	139A
WA-094B	139A
WA-094C	139A
WA-094D	139A
WA-098	139A
WA-098A	139A
WA-098B	140A
WA-098C	140A
WA-098D	140A
WA-26	177
WA-100	140A
WA-100A	140A
WA-100B	140A
WA-100C	140A
WA-100D	140A
WA-110	5074A
WA-110A	5074A
WA-110B	5074A
WA-110C	5074A
WA-110D	5074A
WA-115	141A
WA-115A	141A
WA-115B	141A
WA-115C	141A
WA-115D	141A
WA-120	142A
WA-120A	142A
WA-120B	142A
WA-120C	142A
WA-120D	142A
WA-125	143A
WA-125A	143A
WA-125B	143A
WA-125C	143A
WA-125D	143A
WA-130	143A
WA-130A	143A
WA-130B	143A
WA-130C	143A
WA-130D	143A
WA-140	144A
WA-140A	144A
WA-140B	144A
WA-140C	144A
WA-140D	144A
WA-150	145A
WA-150A	145A
WA-150B	145A
WA-150C	145A
WA-150D	145A
WA-157	5075A
WA-157A	5075A
WA-157B	5075A
WA-157C	5075A
WA-157D	5075A
WA-161D	137A
WA-162	5075A
WA-162A	5075A
WA-162B	5075A
WA-162C	5075A
WA-162D	5075A
WA-167	5075A
WA-167A	5075A
WA-167B	5075A
WA-167C	5075A
WA-167D	5075A
WA-172	5077A
WA-172A	5077A
WA-172B	5077A
WA-172C	5077A
WA-172D	5077A
WA-177	5077A
WA-177A	5077A
WA-177B	5077A
WA-177C	5077A
WA-177D	5077A
WA-182	5077A
WA-182A	5077A
WA-182B	5077A
WA-182C	5077A
WA-182D	5077A
WA-230	5081A
WA-230A	5081A
WA-230B	5081A
WA-230C	5081A
WA-230D	5081A
WA-240	5081A
WA-240A	5081A
WA-240B	5081A
WA-240C	5081A

PART NUMBER	NTE REPLACEMENT
WA-240D	5081A
WA-250	5081A
WA-250A	5081A
WA-250B	5081A
WA-250C	5081A
WA-250D	5081A
WA-260	146A
WA-260A	146A
WA-260B	146A
WA-260C	146A
WA-260D	146A
WA-270	146A
WA-270A	146A
WA-270B	146A
WA-270C	146A
WA-270D	146A
WA-290	5084A
WA-290A	5084A
WA-290B	5084A
WA-290C	5084A
WA-290D	5084A
WA-300	5084A
WA-300A	5084A
WA-300B	5084A
WA-300C	5084A
WA-300D	5084A
WA-330A	147A
WA-330B	147A
WA-330C	147A
WA-330D	147A
WA-340	147A
WA-340A	147A
WA-340B	147A
WA-340C	147A
WA-340D	147A
WB-050	135A
WB-050A	135A
WB-050B	135A
WB-050C	135A
WB-050D	135A
WB-090	139A
WB-090A	139A
WB-090B	139A
WB-090C	139A
WB-090D	139A
WB-052	135A
WB-052A	135A
WB-052B	135A
WB-052C	135A
WB-052D	135A
WB-054	136A
WB-054A	136A
WB-054B	136A
WB-054C	136A
WB-054D	136A
WB-056	136A
WB-056A	136A
WB-056B	136A
WB-056C	136A
WB-056D	136A
WB-058	136A
WB-058A	136A
WB-058B	136A
WB-058C	136A
WB-058D	136A
WB-061	137A
WB-061A	137A
WB-061B	137A
WB-061C	137A
WB-061D	137A
WB-063	137A
WB-063A	137A
WB-063B	137A
WB-063C	137A
WB-063D	137A
WB-065	137A
WB-065A	137A
WB-065B	137A
WB-065C	137A
WB-065D	137A
WB-071	138A
WB-071A	138A
WB-071B	138A
WB-071C	138A
WB-071D	138A
WB-073	138A
WB-073A	138A
WB-073B	138A
WB-073C	138A
WB-073D	138A
WB-075	138A
WB-075A	138A
WB-075B	138A
WB-075C	138A
WB-075D	138A
WB-077	138A
WB-077A	138A
WB-077B	138A
WB-077C	138A
WB-077D	138A
WB-079	5072A
WB-079A	5072A
WB-079B	5072A
WB-079C	5072A
WB-081	5072A
WB-081A	5072A
WB-081B	5072A
WB-081C	5072A
WB-081D	5072A
WB-083	5072A
WB-083A	5072A
WB-083B	5072A
WB-083C	5072A
WB-083D	5072A
WB-085	5072A
WB-085A	5072A
WB-085B	5072A
WB-085C	5072A
WB-085D	5072A
WB-088	139A
WB-088A	139A
WB-088B	139A
WB-088C	139A
WB-088D	139A
WB-092	139A
WB-092A	139A
WB-092B	139A
WB-092C	139A
WB-092D	139A
WB-094	139A
WB-094A	139A
WB-094B	139A
WB-094C	139A
WB-094D	139A
WB-098	140A
WB-098A	140A
WB-098B	140A
WB-098C	140A
WB-098D	140A
WB-100	140A
WB-100A	140A
WB-100B	140A
WB-100C	140A
WB-100D	140A
WB-110	5074A
WB-110A	5074A
WB-110B	5074A
WB-110C	5074A
WB-110D	5074A
WB-115	141A
WB-115A	141A
WB-115B	141A
WB-115C	141A
WB-115D	141A
WB-120	142A
WB-120A	142A
WB-120B	142A
WB-120C	142A
WB-120D	142A
WB-125	143A
WB-125A	143A
WB-125B	143A
WB-125C	143A
WB-125D	143A
WB-130	143A
WB-130A	143A
WB-130B	143A
WB-130C	143A
WB-130D	143A
WB-140	144A
WB-140A	144A
WB-140B	144A
WB-140C	144A
WB-140D	144A
WB-150	145A
WB-150A	145A
WB-150B	145A
WB-150C	145A
WB-150D	145A
WB-157	5075A
WB-157A	5075A
WB-157B	5075A
WB-157C	5075A
WB-157D	5075A
WB-162	5075A
WB-162A	5075A
WB-162B	5075A
WB-162C	5075A
WB-162D	5075A
WB-167	5075A
WB-167A	5075A
WB-167B	5075A
WB-167C	5075A
WB-167D	5075A
WB-172	5077A
WB-172A	5077A
WB-172B	5077A
WB-172C	5077A
WB-172D	5077A
WB-177	5077A
WB-177A	5077A
WB-177B	5077A
WB-177C	5077A
WB-177D	5077A
WB-182	5077A
WB-182A	5077A
WB-182B	5077A
WB-182C	5077A
WB-182D	5077A
WB-230	5081A
WB-230A	5081A
WB-230B	5081A
WB-230C	5081A
WB-230D	5081A
WB-240	5081A
WB-240A	5081A
WB-240B	5081A
WB-240C	5081A
WB-240D	5081A
WB-250	5081A
WB-250A	5081A
WB-250B	5081A
WB-250C	5081A
WB-250D	5081A
WB-260	146A
WB-260A	146A
WB-260B	146A
WB-260C	146A
WB-260D	146A
WB-270	146A
WB-270A	146A
WB-270B	146A
WB-270C	146A
WB-270D	146A
WB-290	5084A
WB-290A	5084A
WB-290B	5084A
WB-290C	5084A
WB-290D	5084A
WB-300	5084A
WB-300A	5084A
WB-300B	5084A
WB-300C	5084A
WB-300D	5084A
WB-330	147A
WB-330A	147A
WB-330B	147A
WB-330C	147A
WB-330D	147A
WB-340	147A
WB-340A	147A
WB-340B	147A
WB-340C	147A
WB-340D	147A
WC120	116
WC14020	116
WC14027	116
WC19862	103A
WC19862A	158
WC19863	102A
WC19864	102A
WC19865	116
WC-050	135A
WC-050A	135A
WC-050B	135A
WC-050C	135A
WC-050D	135A
WC-090	139A
WC-090A	139A
WC-090B	139A
WC-090C	139A
WC-090D	139A
WC-052	135A
WC-052A	135A
WC-052B	135A
WC-052C	135A
WC-052D	135A
WC-054	136A
WC-054A	136A
WC-054B	136A
WC-054C	136A
WC-054D	136A
WC-056	136A
WC-056A	136A
WC-056B	136A
WC-056C	136A
WC-056D	136A
WC-058	136A
WC-058A	136A
WC-058B	136A
WC-058C	136A
WC-058D	136A
WC-061	137A
WC-061A	137A
WC-061B	137A
WC-061C	137A
WC-061D	137A
WC-063	137A
WC-063A	137A
WC-063B	137A
WC-063C	137A
WC-063D	137A
WC-065	137A
WC-065A	137A
WC-065B	137A
WC-065C	137A
WC-065D	137A
WC-071	138A
WC-071A	138A
WC-071B	138A
WC-071C	138A
WC-071D	138A
WC-073	138A
WC-073A	138A
WC-073B	138A
WC-073C	138A
WC-073D	138A
WC-075	138A
WC-075A	138A
WC-075B	138A
WC-075C	138A
WC-075D	138A
WC-077	138A
WC-077A	138A
WC-077B	138A
WC-077C	138A
WC-077D	138A
WC-079	5072A
WC-079A	5072A
WC-079B	5072A
WC-079C	5072A
WC-079D	5072A
WC-081	5072A
WC-081A	5072A
WC-081B	5072A
WC-081C	5072A
WC-081D	5072A
WC-083	5072A
WC-083A	5072A
WC-083B	5072A
WC-083C	5072A
WC-083D	5072A
WC-085	5072A
WC-085A	5072A
WC-085B	5072A
WC-085C	5072A
WC-085D	5072A
WC-088	139A
WC-088A	139A
WC-088B	139A
WC-088C	139A
WC-092	139A
WC-092A	139A
WC-092B	139A
WC-092C	139A
WC-092D	139A
WC-094	139A
WC-094A	139A
WC-094B	139A
WC-094C	139A
WC-094D	139A
WC-098	140A
WC-098A	140A
WC-098B	140A
WC-098C	140A
WC-098D	140A
WC-88D	139A
WC-100	140A
WC-100A	140A
WC-100B	140A
WC-100C	140A
WC-100D	140A
WC-110	5074A
WC-110A	5074A
WC-110B	5074A
WC-110C	5074A
WC-110D	5074A
WC-115	141A
WC-115A	141A
WC-115B	141A
WC-115C	141A
WC-115D	141A
WC-120	142A
WC-120A	142A
WC-120B	142A
WC-120C	142A
WC-120D	142A
WC-125	143A
WC-125A	143A
WC-125B	143A
WC-125C	143A
WC-125D	143A
WC-130	143A
WC-130A	143A
WC-130B	143A
WC-130C	143A
WC-130D	143A
WC-140	144A
WC-140A	144A
WC-140B	144A
WC-140D	140A
WC-150	145A
WC-150A	145A
WC-150B	145A
WC-150C	145A
WC-150D	145A
WC-157	5075A
WC-157A	5075A
WC-157B	5075A
WC-157C	5075A
WC-157D	5075A
WC-162	5075A
WC-162A	5075A
WC-162B	5075A
WC-162C	5075A
WC-162D	5075A
WC-167	5075A
WC-167A	5075A
WC-167B	5075A
WC-167C	5075A
WC-167D	5075A
WC-172	5077A
WC-172A	5077A
WC-172B	5077A
WC-172C	5077A
WC-172D	5077A
WC-177	5077A
WC-177A	5077A
WC-177B	5077A
WC-177C	5077A
WC-177D	5077A
WC-182	5077A
WC-182A	5077A
WC-182B	5077A
WC-182C	5077A
WC-182D	5081A
WC-230	5081A
WC-230A	5081A
WC-230B	5081A
WC-230C	5081A
WC-230D	5081A
WC-240	5081A
WC-240A	5081A
WC-240B	5081A
WC-240C	5081A
WC-240D	5081A
WC-250	5081A
WC-250A	5081A
WC-250B	5081A
WC-250C	5081A
WC-250D	5081A
WC-260	146A
WC-260A	146A
WC-260B	146A
WC-260C	146A
WC-260D	146A
WC-270	146A
WC-270A	146A
WC-270B	146A
WC-270C	146A
WC-270D	146A
WC-290	5084A
WC-290A	5084A
WC-290B	5084A
WC-290C	5084A
WC-290D	5084A
WC-300	5084A
WC-300A	5084A
WC-300B	5084A
WC-300C	5084A
WC-300D	5084A
WC-330	147A
WC-330A	147A
WC-330B	147A
WC-330C	147A
WC-330D	147A
WC-340	147A
WC-340A	147A
WC-340B	147A
WC-340C	147A
WC-340D	147A
WC-14020	116
WC-14027	116
WCM41256	21256
WCM41256-15	21256
WD001	116
WD002	116
WD003	116
WD004	116
WD005	116
WD006	116
WD007	116
WD008	116
WD009	116
WD010	116
WD011	116
WD012	116
WD013	116
WD014	116
WD015	116
WD1	109
WD2	112
WD3	110MP
WD4	177
WD10	113A
WD20	118
WD22	120
WD90	139A
WD-050	135A
WD-050A	135A
WD-050C	135A
WD-090	139A
WD-090A	139A
WD-090B	139A
WD-090C	139A
WD-090D	139A
WD-052	135A
WD-052A	135A
WD-052B	135A
WD-052C	135A
WD-052D	135A
WD-054	136A
WD-054A	138A
WD-054B	136A
WD-054C	136A
WD-054D	136A
WD-056	136A
WD-056A	136A
WD-056B	136A
WD-056C	136A
WD-056D	136A
WD-058	136A
WD-058A	136A
WD-058B	136A
WD-058C	136A
WD-058D	136A
WD-061	137A
WD-061A	137A
WD-061B	137A
WD-061C	137A
WD-061D	137A
WD-063	137A
WD-063A	137A
WD-063B	137A
WD-063C	137A
WD-063D	137A
WD-065	137A
WD-065A	137A
WD-065B	137A
WD-065C	137A
WD-065D	137A
WD-071	138A
WD-071A	138A
WD-071B	138A
WD-071C	138A
WD-071D	138A
WD-073	138A
WD-073A	138A
WD-073B	138A
WD-073C	138A
WD-073D	138A
WD-075	138A
WD-075A	138A
WD-075B	138A
WD-075C	138A
WD-075D	138A
WD-077	138A
WD-077A	138A
WD-077B	138A
WD-077C	138A
WD-077D	138A
WD-079	5072A
WD-079A	5072A
WD-079B	5072A
WD-079C	5072A
WD-079D	5072A
WD-081	5072A
WD-081A	5072A
WD-081B	5072A
WD-081C	5072A
WD-081D	5072A
WD-083	5072A
WD-083A	5072A
WD-083B	5072A
WD-083C	5072A
WD-083D	5072A
WD-085	5072A
WD-085A	5072A
WD-085B	5072A
WD-085C	5072A
WD-085D	5072A
WD-088	139A
WD-088A	139A
WD-088B	139A
WD-088C	139A
WD-088D	139A
WD-092	139A
WD-092A	139A
WD-092B	139A
WD-092C	139A
WD-092D	139A
WD-094	139A
WD-094A	139A
WD-094B	139A
WD-094C	139A
WD-094D	139A
WD-098	140A
WD-098A	140A
WD-098B	140A
WD-098C	140A
WD-098D	140A
WD-100	140A
WD-100A	140A
WD-100B	140A
WD-100C	140A
WD-100D	140A
WD-110	5074A
WD-110A	5074A
WD-110B	5074A
WD-110C	5074A
WD-110D	5074A
WD-115	141A
WD-115A	141A
WD-115B	141A
WD-115C	141A
WD-115D	141A
WD-120	142A
WD-120A	142A
WD-120B	142A
WD-120C	142A
WD-120D	142A
WD-125	143A
WD-125A	143A
WD-125B	143A
WD-125C	143A
WD-125D	143A
WD-130	143A
WD-130A	143A
WD-130B	143A
WD-130C	143A
WD-130D	143A
WD-140	144A
WD-140A	144A
WD-140B	144A
WD-140C	144A
WD-140D	144A
WD-150B	145A
WD-150C	145A
WD-150D	145A
WD-157	5075A
WD-157A	5075A
WD-157B	5075A
WD-157C	5075A
WD-157D	5075A
WD-162	5075A
WD-162A	5075A
WD-162B	5075A
WD-162C	5075A
WD-162D	5075A
WD-167	5075A
WD-167A	5075A
WD-167B	5075A
WD-167C	5075A
WD-167D	5075A
WD-172	5077A
WD-172A	5077A
WD-172B	5077A
WD-172C	5077A
WD-172D	5077A
WD-177	5077A
WD-177A	5077A
WD-177B	5077A
WD-177C	5077A
WD-177D	5077A
WD-182	5077A
WD-182A	5077A
WD-182B	5077A
WD-182C	5077A
WD-182D	5077A
WD-230	5081A
WD-230A	5081A
WD-230B	5081A
WD-230C	5081A
WD-230D	5081A
WD-240	5081A
WD-240A	5081A
WD-240B	5081A
WD-240C	5081A
WD-240D	5081A
WD-250	5081A
WD-250A	5081A
WD-250B	5081A
WD-250C	5081A
WD-250D	5081A
WD-260	146A
WD-260A	146A
WD-260B	146A
WD-260C	146A
WD-260D	146A
WD-270	146A
WD-270A	146A
WD-270B	146A
WD-270C	146A
WD-270D	146A
WD-290	5084A
WD-290A	5084A
WD-290B	5084A
WD-290C	5084A
WD-290D	5084A
WD-300	5084A
WD-300A	5084A
WD-300B	5084A
WD-300C	5084A
WD-300D	5084A
WD-330	147A
WD-330A	147A
WE081	5072A
WE1066	5322
WE-050	135A
WE-050A	135A
WE-050B	135A
WE-050C	135A
WE-050D	135A
WE-090	139A
WE-090A	139A
WE-090B	139A
WE-090C	139A
WE-090D	139A
WE-052	135A
WE-052A	135A
WE-052B	135A
WE-052C	135A
WE-052D	135A
WE-054	136A
WE-054A	136A
WE-054B	136A
WE-054C	136A
WE-054D	136A
WE-056	136A
WE-056A	136A
WE-056B	136A
WE-056C	136A
WE-056D	136A
WE-058	136A
WE-058A	136A
WE-058B	136A
WE-058C	136A
WE-058D	136A
WE-061	136A
WE-061A	137A
WE-061B	137A
WE-061C	137A
WE-061D	137A
WE-063	137A
WE-063A	137A
WE-063B	137A
WE-063C	137A
WE-063D	137A
WE-065	137A
WE-065A	137A
WE-065B	137A
WE-065C	137A
WE-065D	137A
WE-071	138A
WE-071A	138A
WE-071B	138A
WE-071C	138A
WE-071D	138A
WE-073	138A
WE-073A	138A
WE-073B	138A
WE-073C	138A
WE-073D	138A
WE-075	138A
WE-075A	138A
WE-075B	138A
WE-075C	138A
WE-075D	138A
WE-077	138A
WE-077A	138A
WE-077B	138A
WE-077C	138A
WE-077D	138A
WE-079	5072A
WE-079A	5072A
WE-079B	5072A
WE-079C	5072A
WE-079D	5072A
WE-081	5072A
WE-081A	5072A
WE-081B	5072A
WE-081C	5072A

PART NUMBER	NTE REPLACEMENT
WE-081D	5072A
WE-083	5072A
WE-083A	5072A
WE-083B	5072A
WE-083C	5072A
WE-083D	5072A
WE-085	5072A
WE-085A	5072A
WE-085B	5072A
WE-085C	5072A
WE-085D	5072A
WE-088	139A
WE-088A	139A
WE-088B	139A
WE-088C	139A
WE-088D	139A
WE-092	139A
WE-092A	139A
WE-092B	139A
WE-092C	139A
WE-092D	139A
WE-094	139A
WE-094A	139A
WE-094B	139A
WE-094C	139A
WE-094D	139A
WE-098	140A
WE-098A	140A
WE-098B	140A
WE-098C	140A
WE-098D	140A
WE-100	140A
WE-100A	140A
WE-100B	140A
WE-100C	140A
WE-100D	140A
WE-110	5074A
WE-110A	5074A
WE-110B	5074A
WE-110C	5074A
WE-110D	140A
WE-115	141A
WE-115A	141A
WE-115B	141A
WE-115C	141A
WE-115D	141A
WE-120	142A
WE-120A	142A
WE-120B	142A
WE-120C	142A
WE-120D	142A
WE-125	143A
WE-125A	143A
WE-125B	143A
WE-125C	143A
WE-125D	143A
WE-130	143A
WE-130A	143A
WE-130B	143A
WE-130C	143A
WE-130D	143A
WE-140	144A
WE-140A	144A
WE-140B	144A
WE-140C	144A
WE-140D	144A
WE-150	145A
WE-150A	145A
WE-150B	145A
WE-150C	145A
WE-150D	145A
WE-157	5075A
WE-157A	5075A
WE-157B	5075A
WE-157C	5075A
WE-157D	5075A
WE-162	5075A
WE-162A	5075A
WE-162B	5075A
WE-162C	5075A
WE-162D	5075A
WE-167	5075A
WE-167A	5075A
WE-167B	5075A
WE-167C	5075A
WE-167D	5075A
WE-172	5077A
WE-172A	5077A
WE-172B	5077A
WE-172C	5077A
WE-172D	5077A
WE-177	5077A
WE-177A	5077A
WE-177B	5077A
WE-177C	5077A
WE-177D	5077A
WE-182	5077A
WE-182A	5077A
WE-182B	5077A
WE-182C	5077A
WE-182D	5077A
WE-230	5081A
WE-230A	5081A
WE-230B	5081A
WE-230C	5081A
WE-230D	5081A
WE-240	5081A
WE-240A	5081A
WE-240B	5081A
WE-240C	5081A
WE-240D	5081A
WE-250	5081A
WE-250A	5081A
WE-250B	5081A

PART NUMBER	NTE REPLACEMENT
WE-250C	5081A
WE-250D	5081A
WE-260	146A
WE-260A	146A
WE-260B	146A
WE-260C	146A
WE-260D	146A
WE-270	146A
WE-270A	146A
WE-270B	146A
WE-270C	146A
WE-270D	146A
WE-290	5084A
WE-290A	5084A
WE-290B	5084A
WE-290C	5084A
WE-290D	5084A
WE-300	5084A
WE-300A	5084A
WE-300B	5084A
WE-300C	5084A
WE-300D	5084A
WE-330	147A
WE-330A	147A
WE-330C	147A
WE-330D	147A
WE-340	147A
WE-340A	147A
WE-340B	147A
WE-340C	147A
WE-340D	147A
WED8748-2	909
WEP2	100
WEP3	160
WEP15	512
WEP16	511
WEP17	508
WEP18	509
WEP19	510
WEP20	514
WEP50	123AP
WEP51	159
WEP52	129
WEP53	293
WEP54	123AP
WEP55	123AP
WEP56	108
WEP57	294
WEP58	123
WEP59	128
WEP60	129
WEP61	157
WEP62	159
WEP63	161
WEP64	194
WEP65	195A
WEP66	199
WEP67	232
WEP68	287
WEP100	100
WEP101	140A
WEP102	134A
WEP103	137A
WEP103A	138A
WEP104	139A
WEP105	142A
WEP106	106
WEP118	118
WEP134	109
WEP139	112
WEP154	125
WEP155	125
WEP156	125
WEP157	125
WEP158	125
WEP158A	125
WEP159	125
WEP160	125
WEP165	113A
WEP170	125
WEP172	506
WEP180	173BP
WEP182	173BP
WEP184	503
WEP185	504
WEP186	506
WEP187	158
WEP189	HVD-1
WEP190	HVD-2
WEP191	HVD-3
WEP199	522
WEP200	614
WEP215	513
WEP221	180
WEP222	181
WEP224	224
WEP226	213
WEP227	158
WEP228	155
WEP229	131
WEP229MP	131MP
WEP230	121
WEP230MP	121MP
WEP231	105
WEP232	104
WEP232MP	104MP
WEP233	105
WEP234	121
WEP234MP	121MP
WEP235	127
WEP236	213
WEP238	158
WEP239	176
WEP240	124

PART NUMBER	NTE REPLACEMENT
WEP241	175
WEP242	129
WEP243	224
WEP244	157
WEP245	184
WEP246	185
WEP247	130
WEP247MP	130MP
WEP248	219
WEP250	102
WEP253	100
WEP254	100
WEP268MP	280MP
WEP280	291
WEP310	6401
WEP367	131
WEP371	229
WEP372	229
WEP373	199
WEP380	229
WEP394	229
WEP403	199
WEP405	102A
WEP454	289
WEP458	123AP
WEP460	229
WEP474	226
WEP474MP	226MP
WEP481	131
WEP495	194
WEP500	703
WEP501	704
WEP501#	704
WEP504	708
WEP505	709
WEP507	712
WEP509	714
WEP513	722
WEP514	309K
WEP515	725
WEP517	224
WEP535	107
WEP536	199
WEP537	199
WEP538	199
WEP602	135A
WEP603	136A
WEP604	141A
WEP605	143A
WEP606	144A
WEP607	145A
WEP608	146A
WEP609	147A
WEP610	148A
WEP611	149A
WEP612	150A
WEP613	151A
WEP620	102A
WEP621	160
WEP624	104
WEP628	104
WEP628MP	104MP
WEP630	100
WEP631	100
WEP632	100
WEP633	293
WEP634	199
WEP635	126
WEP637	160
WEP641	101
WEP641A	103
WEP641B	103A
WEP642	131
WEP642MP	131MP
WEP643	131
WEP643MP	131MP
WEP644	199
WEP645	179
WEP700	185
WEP701	184
WEP702	171
WEP703	175
WEP704	130
WEP707	163A
WEP709	161
WEP710	319P
WEP712	154
WEP713	154
WEP715	159
WEP716	159
WEP717	159
WEP719	229
WEP720	229
WEP723	123AP
WEP724	123AP
WEP725	327
WEP728	123AP
WEP729	123AP
WEP735	123AP
WEP735A	123AP
WEP736	123A
WEP740	163A
WEP740A	164
WEP740B	165
WEP745	152
WEP746	153
WEP747	182
WEP748	183
WEP749	190
WEP751	186
WEP752	187
WEP753	192A
WEP754	193A
WEP755	195A

PART NUMBER	NTE REPLACEMENT
WEP756	196
WEP757	197
WEP758	210
WEP759	211
WEP760	219
WEP762	225
WEP763	228A
WEP764	238
WEP765	242
WEP767	278
WEP768	280
WEP769	281
WEP770	283
WEP771	306
WEP773	123AP
WEP774	195A
WEP775	284
WEP775MP	284MP
WEP776	285
WEP777	224
WEP778	224
WEP779	198
WEP780	291
WEP781	292
WEP782	317
WEP783	318
WEP784	161
WEP785	235
WEP799	237
WEP801	401
WEP802	132
WEP812	320
WEP813	311
WEP828	229
WEP829	123AP
WEP838	123AP
WEP840	236
WEP853	188
WEP854	191
WEP857	189
WEP858	188
WEP880	184
WEP883	185
WEP900	186A
WEP903	320
WEP904	221
WEP905	222
WEP906	233
WEP907	234
WEP908	241
WEP910	289
WEP911	290
WEP912	293
WEP913	295
WEP914	297
WEP915	298
WEP916	294
WEP917	300
WEP918	302
WEP920	312
WEP921	313
WEP922	315
WEP923	316
WEP924	319
WEP925	519
WEP927	726
WEP929	754
WEP933	941M
WEP935	1012
WEP936	1016
WEP937	1058
WEP938	1075A
WEP939	1082
WEP941	1100
WEP942	1102
WEP943	1103
WEP944	1104
WEP949	1155
WEP950	4017B
WEP953	156
WEP954	156
WEP955	6407
WEP956	229
WEP957	272
WEP958	273
WEP959	274
WEP960	275
WEP968	288
WEP969	311
WEP971	172A
WEP972	243
WEP973	244
WEP974	245
WEP975	246
WEP976	247
WEP977	248
WEP978	249
WEP979	250
WEP980	251
WEP981	252
WEP982	253
WEP983	254
WEP984	257
WEP986	259
WEP988	261
WEP989	262
WEP990	263
WEP991	264
WEP992	265
WEP994	267
WEP995	268
WEP996	268
WEP997	270
WEP1008	5071A

PART NUMBER	NTE REPLACEMENT
WEP1010	5072A
WEP1014	300
WEP1018	299
WEP1051	166
WEP1052	167
WEP1053	168
WEP1054	169
WEP1056	170
WEP1060	177
WEP1060MP	178MP
WEP1067	5324
WEP1075	112
WEP1076	6402
WEP1077	6403
WEP1078	6404
WEP1079	6405
WEP1080	6408
WEP1082	116
WEP1083	116
WEP1096	186A
WEP1100	5067A
WEP1102	5069A
WEP1103	135A
WEP1104	136A
WEP1106	5071A
WEP1107	138A
WEP1108	5072A
WEP1109	139A
WEP1110	140A
WEP1112	142A
WEP1114	145A
WEP1116	5077A
WEP1118	5080A
WEP1120	146A
WEP1122	147A
WEP1125	5086A
WEP1126	5088A
WEP1128	5090A
WEP1130	5092A
WEP1132	150A
WEP1134	5096A
WEP1136	5097A
WEP1138	5100A
WEP1140	5103A
WEP1145	5061A
WEP1146	5062A
WEP1147	5063A
WEP1148	5064A
WEP1149	5065A
WEP1150	5066A
WEP1151	134A
WEP1152	5068A
WEP1153	5070A
WEP1154	137A
WEP1155	5073A
WEP1156	5074A
WEP1157	141A
WEP1158	143A
WEP1159	144A
WEP1160	5075A
WEP1161	5076A
WEP1162	5078A
WEP1163	5079A
WEP1164	5081A
WEP1165	5082A
WEP1166	5083A
WEP1167	5084A
WEP1168	5085A
WEP1169	5087A
WEP1172	5089A
WEP1174	148A
WEP1175	5091A
WEP1176	149A
WEP1177	5093A
WEP1178	5094A
WEP1179	5095A
WEP1181	151A
WEP1182	5098A
WEP1183	5099A
WEP1184	5101A
WEP1185	5102A
WEP1187	5104A
WEP1188	5105A
WEP1200	5113A
WEP1204	5117A
WEP1206	5120A
WEP1208	5122A
WEP1212	5127A
WEP1214	5131A
WEP1237	235
WEP1239	237
WEP1300	5174A
WEP1300R	5274AK
WEP1302	5176A
WEP1302R	5176A
WEP1304	5178A
WEP1304R	5178AK
WEP1306	235
WEP1306R	5181AK
WEP1307	236
WEP1308	5183AK
WEP1310	5186A
WEP1310R	5186AK
WEP1312	5188A
WEP1312R	5188AK
WEP1314	5191A
WEP1314R	5191AK
WEP1316	5194A
WEP1316R	5194AK
WEP1318	5197A
WEP1318R	5197AK
WEP1320	5200A
WEP1320R	5200AK
WEP1322	5203A

PART NUMBER	NTE REPLACEMENT
WEP1322R	5203AK
WEP1324	5205A
WEP1324R	5205AK
WEP1326	5208A
WEP1326R	5208AK
WEP1328	5212A
WEP1328R	5212AK
WEP1330	5215A
WEP1330R	5215AK
WEP1332	5217A
WEP1332R	5217AK
WEP1334	5220A
WEP1334R	5220AK
WEP1336	5223A
WEP1336R	5223AK
WEP1338	5226A
WEP1338R	5226AK
WEP1340	5230A
WEP1340R	5230AK
WEP1400	5000A
WEP1401	5001A
WEP1402	5002A
WEP1403	5003A
WEP1404	5004A
WEP1405	5005A
WEP1406	5006A
WEP1407	5007A
WEP1408	5008A
WEP1409	5009A
WEP1411	5010A
WEP1412	5011A
WEP1413	5012A
WEP1414	5013A
WEP1415	5014A
WEP1416	5015A
WEP1417	5016A
WEP1418	5017A
WEP1419	5018A
WEP1420	5019A
WEP1421	5020A
WEP1423	5021A
WEP1424	5022A
WEP1425	5023A
WEP1426	5024A
WEP1427	5025A
WEP1428	5026A
WEP1429	5027A
WEP1430	5028A
WEP1431	5029A
WEP1432	5030A
WEP1433	5031A
WEP1434	5032A
WEP1435	5033A
WEP1436	5034A
WEP1437	5035A
WEP1438	5036A
WEP1439	5037A
WEP1440	5038A
WEP1441	5039A
WEP1443	5040A
WEP1445	5041A
WEP1448	5042A
WEP1449	5043A
WEP1450	5044A
WEP1451	5045A
WEP1452	5046A
WEP1453	5047A
WEP1454	5048A
WEP1455	5049A
WEP1456	5050A
WEP1458	5051A
WEP1459	5052A
WEP1460	5053A
WEP1461	5054A
WEP1462	5055A
WEP1463	5056A
WEP1464	5057A
WEP1466	5058A
WEP1467	5059A
WEP1468	5060A
WEP1504	5116A
WEP1514	5125A
WEP1518	5130A
WEP1606	5111A
WEP1607	5112A
WEP1608	5113A
WEP1609	5114A
WEP1610	5115A
WEP1612	5117A
WEP1613	5118A
WEP1614	5119A
WEP1615	5120A
WEP1616	5121A
WEP1617	5122A
WEP1618	5123A
WEP1619	5124A
WEP1620	5126A
WEP1621	5127A
WEP1622	5128A
WEP1623	5129A
WEP1625	5131A
WEP1626	5132A
WEP1627	5133A
WEP1628	5134A
WEP1629	5135A
WEP1630	5136A
WEP1631	5137A
WEP1632	5138A
WEP1633	5139A
WEP1634	5140A
WEP1635	5141A
WEP1636	5142A
WEP1637	5143A
WEP1638	5144A

PART NUMBER	NTE REPLACEMENT
WEP1639	5145A
WEP1641	5146A
WEP1643	5147A
WEP1646	5148A
WEP1647	5149A
WEP1648	5150A
WEP1649	5151A
WEP1650	5152A
WEP1651	5153A
WEP1652	5154A
WEP1653	5155A
WEP1654	5156A
WEP1656	5157A
WEP1657	5158A
WEP1658	5159A
WEP1659	5160A
WEP1660	5161A
WEP1661	5162A
WEP1662	5163A
WEP1664	5164A
WEP1665	5165A
WEP1666	5166A
WEP1717	123AP
WEP1860	158
WEP1945	199
WEP2001	711
WEP2003	1166
WEP2005	721
WEP2006	723
WEP2007	727
WEP2010	730
WEP2011	731
WEP2012	734
WEP2014	736
WEP2015	737
WEP2016	738
WEP2017	739
WEP2017/739	739
WEP2018	740A
WEP2020	742
WEP2021	743
WEP2022	744
WEP2025	747
WEP2027	749
WEP2028	750
WEP2037	747
WEP2040	812
WEP2043	787
WEP2045	799
WEP2050	812
WEP2052	818
WEP2053	778A
WEP2055	780
WEP2056	909D
WEP2058	783
WEP2059	784
WEP2062	787
WEP2063	941D
WEP2064	789
WEP2066	791
WEP2067	973
WEP2068	980
WEP2072	1024
WEP2074	799
WEP2075	801
WEP2081	807
WEP2081#	1050
WEP2085	812
WEP2088	1079
WEP2092	1093
WEP2095	906
WEP2097	908
WEP2098	909
WEP2099	909D
WEP2100	910
WEP2101	910D
WEP2104	912
WEP2105	1140
WEP2106	914
WEP2107	915
WEP2108	916
WEP2109	1158
WEP2110	923
WEP2111	923D
WEP2112	925
WEP2113	1172
WEP2114	941
WEP2117	947
WEP2118	949
WEP2119	955M
WEP2122	1003
WEP2123	1004
WEP2124	1005
WEP2125	1006
WEP2127	1198
WEP2128	1009
WEP2129	1010
WEP2131	1201
WEP2132	1014
WEP2135	1203
WEP2136	1019
WEP2141	1211
WEP2144	1218
WEP2145	1028
WEP2146	1029
WEP2148	1223
WEP2149	1032
WEP2152	1035
WEP2153	1036
WEP2155	1038
WEP2156	1039
WEP2157	1040
WEP2158	1041
WEP2159	1042

PART NUMBER	NTE REPLACEMENT
WEP2160	1043
WEP2161	1045
WEP2162	1046
WEP2163	1047
WEP2165	1049
WEP2166	1050
WEP2168	1052
WEP2169	1053
WEP2170	1054
WEP2171	1055
WEP2172	1056
WEP2173	1057
WEP2175	1060
WEP2176	1061
WEP2177	1062
WEP2179	1064
WEP2187	1072
WEP2188	1073
WEP2193	1079
WEP2194	1080
WEP2195	1081A
WEP2196	1083
WEP2198	1085
WEP2200	1087
WEP2202	1089
WEP2204	1091
WEP2205	1092
WEP2206	1093
WEP2207	1094
WEP2209	1096
WEP2210	1097
WEP2211	1098
WEP2212	1099
WEP2213	1101
WEP2215	1106
WEP2216	1107
WEP2217	1108
WEP2219	1110
WEP2223	1115
WEP2224	1116
WEP2225	1117
WEP2226	1119
WEP2227	1120
WEP2228	1121
WEP2229	1122
WEP2230	1123
WEP2231	1124
WEP2233	1126
WEP2234	1127
WEP2235	1128
WEP2237	1130
WEP2242	1135
WEP2244	1137
WEP2245	1139
WEP2245/1245	1245
WEP2246	1140
WEP2247	1141
WEP2248	1142
WEP2250	1149
WEP2253	1152
WEP2254	1154
WEP2255	1156
WEP2256	1158
WEP2258	1160
WEP2266	1263
WEP2279	7493A
WEP2308	1308
WEP3305	5247A
WEP3307	5249A
WEP3307R	5249AK
WEP3309	5252A
WEP3309R	5252AK
WEP3311	5254A
WEP3311R	5254AK
WEP3314	5257A
WEP3314R	5257AK
WEP3317	5260A
WEP3317R	5260AK
WEP3320	5263A
WEP3320R	5263AK
WEP3323	5266A
WEP3323R	5266AK
WEP3325	5269A
WEP3325R	5269AK
WEP3327	5271A
WEP3327R	5271AK
WEP3334	5278A
WEP3334R	5278AK
WEP3340	5285A
WEP3340R	5285AK
WEP4000	5800
WEP4001	5801
WEP4002	5802
WEP4004	5804
WEP4006	5806
WEP4007	5808
WEP4008	156A
WEP4081	5912
WEP4085	5916
WEP4089	5920
WEP6240	5452
WEP6242	5454
WEP6243	5455
WEP6244	5456
WEP6251	5461
WEP6252	5462
WEP6253	5463
WEP6255	5465
WEP6271	5481
WEP6273	5483
WEP6300	230
WEP6301	231
WEP6302	308
WEP6303	310
WEP6304	507
WEP6306	174
WEP6311	276
WEP6313	314
WEP7400	7400
WEP7401	7401
WEP7402	7402
WEP7408	7408
WEP7426	7426
WEP7473	7473
WEP7474	7474
WEP7476	7476
WEP7490	7490
WEP8000	400
WEP8002-R	402
WEP8003	403
WEP8004	404
WEP8005	405
WEP8006	410
WEP8008	412
WEP8009	413
WEP8010	414
WEP8011	415
WEP8012	422
WEP8051	209
WEP8054	409
WEP8055	416
WEP8056	417
WEP8057	418
WEP8058	419
WEP8060	421
WEP8061	423
WEP9158	9158
WEP9924	9924
WEP9946	9946
WEP9980	271
WEP74145	74145
WEP-2203	1090
WEPG6001	179
WEPS3001	224
WEPS3002	224
WEPS3020	224
WEPS3021	191
WEPS3023	210
WEPS3027	211
WEPS3031	189
WEPS5003	184
WEPS5004	182
WEPS5005	183
WEPS5007	185
WEPS7000	181
WEPS7001	180
WEPS9100	172A
WER3305R	5247AK
WF1	133
WF2	132
WF-050	135A
WF-050A	135A
WF-050B	135A
WF-050C	135A
WF-050D	135A
WF-090	139A
WF-090A	139A
WF-090B	139A
WF-090C	139A
WF-090D	139A
WF-052	135A
WF-052A	135A
WF-052B	135A
WF-052C	135A
WF-052D	135A
WF-054	136A
WF-054A	136A
WF-054B	136A
WF-054D	136A
WF-056	136A
WF-056A	136A
WF-056B	136A
WF-056C	136A
WF-056D	136A
WF-058	136A
WF-058A	136A
WF-058B	136A
WF-058C	136A
WF-058D	136A
WF-061	145A
WF-061A	145A
WF-061B	145A
WF-061C	145A
WF-061D	145A
WF-063	145A
WF-063A	145A
WF-063B	145A
WF-063C	145A
WF-063D	145A
WF-065	145A
WF-065A	145A
WF-065B	145A
WF-065C	145A
WF-065D	145A
WF-071	138A
WF-071A	138A
WF-071B	138A
WF-071C	138A
WF-071D	138A
WF-073	138A
WF-073A	138A
WF-073B	138A
WF-073C	138A
WF-073D	138A
WF-075	138A
WF-075A	138A
WF-075B	138A
WF-075C	138A
WF-075D	138A
WF-077	138A
WF-077A	138A
WF-077B	138A
WF-077C	138A
WF-077D	138A
WF-079	5072A
WF-079A	5072A
WF-079B	5072A
WF-079C	5072A
WF-079D	5072A
WF-081	5072A
WF-081A	5072A
WF-081B	5072A
WF-081C	5072A
WF-081D	5072A
WF-083	5072A
WF-083A	5072A
WF-083B	5072A
WF-083C	5072A
WF-083D	5072A
WF-085	5072A
WF-085B	5072A
WF-085C	5072A
WF-085D	5072A
WF-088	139A
WF-088A	139A
WF-088B	139A
WF-088C	139A
WF-088D	139A
WF-092	139A
WF-092A	139A
WF-092B	139A
WF-092C	139A
WF-092D	139A
WF-094	139A
WF-094A	139A
WF-094B	139A
WF-094C	139A
WF-094D	139A
WF-098	140A
WF-098A	140A
WF-098B	140A
WF-098C	140A
WF-098D	140A
WF-100	140A
WF-100A	140A
WF-100B	142A
WF-100C	142A
WF-100D	142A
WF-110	5072A
WF-110A	5074A
WF-110B	5074A
WF-110C	5074A
WF-110D	5074A
WF-115	141A
WF-115A	141A
WF-115B	141A
WF-115C	141A
WF-115D	141A
WF-120	142A
WF-120A	142A
WF-120B	142A
WF-120C	142A
WF-120D	142A
WF-125	143A
WF-125A	143A
WF-125B	143A
WF-125C	143A
WF-125D	143A
WF-130	143A
WF-130A	143A
WF-130B	143A
WF-130C	143A
WF-130D	143A
WF-140	144A
WF-140A	144A
WF-140B	144A
WF-140C	144A
WF-140D	144A
WF-150	145A
WF-150A	145A
WF-150B	145A
WF-150C	145A
WF-150D	145A
WF-157	5075A
WF-157A	5075A
WF-157B	5075A
WF-157C	5075A
WF-157D	5075A
WF-162	5075A
WF-162A	5075A
WF-162B	5075A
WF-162C	5075A
WF-162D	5075A
WF-167	5075A
WF-167A	5075A
WF-167B	5075A
WF-167C	5075A
WF-167D	5075A
WF-172	5077A
WF-172A	5077A
WF-172B	5081A
WF-172C	5081A
WF-172D	5081A
WF-177	5081A
WF-177A	5081A
WF-177B	5081A
WF-177C	5081A
WF-177D	5081A
WF-182	5081A
WF-182A	5081A
WF-182B	5081A
WF-182C	5081A
WF-182D	5081A
WF-230	5081A
WF-230A	5081A
WF-230B	5081A
WF-230C	5081A
WF-230D	5081A
WF-240	5081A
WF-240A	5081A
WF-240B	5081A
WF-240C	5081A
WF-240D	5081A
WF-250A	5081A
WF-250B	5081A
WF-250C	5081A
WF-250D	5081A
WF-260	139A
WF-260A	146A
WF-260B	146A
WF-260D	146A
WF-270	146A
WF-270A	146A
WF-270B	146A
WF-270C	146A
WF-270D	146A
WF-290	146A
WF-290A	5084A
WF-290B	5084A
WF-290C	5084A
WF-290D	5084A
WF-300	5084A
WF-300A	5084A
WF-300B	5084A
WF-300C	5084A
WF-300D	5084A
WF-330	147A
WF-330A	147A
WF-330B	147A
WF-330C	147A
WF-330D	147A
WF-340	147A
WF-340A	147A
WF-340B	147A
WF-340C	147A
WF-340D	147A
WG0A-90	177
WG91	139A
WG599	177
WG713	177
WG714	177
WG851	519
WG1010	177
WG1010A	177
WG1010B	177
WG1012	177
WG1014A	177
WG1021	177
WG-050A	135A
WG-050B	135A
WG-050C	135A
WG-050D	135A
WG-090	139A
WG-090A	139A
WG-090B	139A
WG-090C	139A
WG-090D	139A
WG-052	135A
WG-052A	135A
WG-052B	135A
WG-052C	135A
WG-052D	135A
WG-054	136A
WG-054A	136A
WG-054B	136A
WG-054C	136A
WG-054D	136A
WG-056	136A
WG-056A	136A
WG-056B	136A
WG-056C	136A
WG-056D	136A
WG-058	136A
WG-058A	136A
WG-058B	136A
WG-058C	136A
WG-058D	136A
WG-061	137A
WG-061A	137A
WG-061B	137A
WG-061C	137A
WG-061D	137A
WG-063	137A
WG-063A	137A
WG-063B	137A
WG-063C	137A
WG-063D	137A
WG-065	137A
WG-065A	137A
WG-065B	137A
WG-065C	137A
WG-065D	137A
WG-071	138A
WG-071A	138A
WG-071B	138A
WG-071C	138A
WG-071D	138A
WG-073	138A
WG-073A	138A
WG-073B	138A
WG-073C	138A
WG-073D	138A
WG-075	138A
WG-075A	138A
WG-075B	138A
WG-075C	138A
WG-075D	138A
WG-077	138A
WG-077A	138A
WG-077B	138A
WG-077C	138A
WG-077D	138A
WG-079	5072A
WG-079A	5072A
WG-079B	5072A
WG-079C	5072A
WG-079D	5072A
WG-081	5072A
WG-081A	5072A
WG-081B	5072A
WG-081C	5072A
WG-081D	5072A
WG-083	5072A
WG-083A	5072A
WG-083B	5072A
WG-083C	5072A
WG-083D	5072A
WG-085	5072A
WG-085A	5072A
WG-085B	5072A
WG-085C	5072A
WG-085D	5072A
WG-088	139A
WG-088A	139A
WG-088B	139A
WG-088C	139A
WG-088D	139A
WG-092	139A
WG-092A	139A
WG-092B	139A
WG-092C	139A
WG-092D	139A
WG-094	139A
WG-094A	139A
WG-094B	139A
WG-094C	139A
WG-094D	139A
WG-098	140A
WG-098A	140A
WG-098B	140A
WG-098C	140A
WG-098D	140A
WG-10AS	312
WG-100	140A
WG-100A	140A
WG-100B	140A
WG-100C	140A
WG-100D	140A
WG-101DA	177
WG-110	5074A
WG-110A	5074A
WG-110B	5074A
WG-110C	5074A
WG-110D	5074A
WG-115	141A
WG-115A	141A
WG-115B	141A
WG-115C	141A
WG-115D	141A
WG-120	142A
WG-120A	142A
WG-120B	142A
WG-120C	142A
WG-120D	142A
WG-125	143A
WG-125A	143A
WG-125B	143A
WG-125C	143A
WG-125D	143A
WG-130	143A
WG-130A	143A
WG-130B	143A
WG-130C	143A
WG-130D	143A
WG-140	144A
WG-140A	144A
WG-140B	144A
WG-140C	144A
WG-140D	144A
WG-150	145A
WG-150A	145A
WG-150B	145A
WG-150C	145A
WG-150D	145A
WG-157	5075A
WG-157A	5075A
WG-157B	5075A
WG-157C	5075A
WG-157D	5075A
WG-162	5075A
WG-162A	5075A
WG-162B	5075A
WG-162C	5075A
WG-162D	5075A
WG-167	5075A
WG-167A	5075A
WG-167B	5075A
WG-167C	5075A
WG-167D	5075A
WG-172	5077A
WG-172A	5077A
WG-172B	5077A
WG-172C	5077A
WG-172D	5077A
WG-177	5077A
WG-177A	5077A
WG-177B	5077A
WG-177C	5077A
WG-177D	5077A
WG-182	5077A
WG-182A	5077A
WG-182B	5077A
WG-182C	5077A
WG-182D	5077A
WG-230	5081A
WG-230A	5081A
WG-230B	5081A
WG-230C	5081A
WG-230D	5081A
WG-240	5081A
WG-240A	5081A
WG-240B	5081A
WG-240C	5081A
WG-240D	5081A
WG-250	5081A
WG-250A	5081A
WG-250B	5081A
WG-250C	5081A
WG-250D	5081A
WG-260	146A
WG-260A	146A
WG-260B	146A
WG-260C	146A
WG-260D	146A
WG-270	146A
WG-270A	146A
WG-270B	146A
WG-270C	146A
WG-270D	146A
WG-290	5084A
WG-290A	5084A
WG-290B	5084A
WG-290C	5084A
WG-290D	5084A
WG-300	5084A
WG-300A	5084A
WG-300B	5084A
WG-300C	5084A
WG-300D	5084A
WG-330	147A
WG-330A	147A
WG-330B	147A
WG-330C	147A
WG-330D	147A
WG-340	147A
WG-340A	147A
WG-340B	147A
WG-340C	147A
WG-340D	147A
WG-599	177
WG-713	177
WG-713C	177
WG-1010-A	177
WG-1010A	177
WG-1012	177
WH130	5098A
WH130A	5098A
WH1012	177
WH-050	5081A
WH-050A	5081A
WH-050B	5081A
WH-050C	5081A
WH-050D	5081A
WH-090	139A
WH-090A	139A
WH-090B	139A
WH-090C	139A
WH-090D	139A
WH-052	5081A
WH-052A	5081A
WH-052B	5081A
WH-052C	5081A
WH-052D	5081A
WH-054	136A
WH-054A	136A
WH-054B	136A
WH-054C	136A
WH-054D	136A
WH-056	136A
WH-056A	136A
WH-056B	136A
WH-056C	136A
WH-056D	136A
WH-058	136A
WH-058A	136A
WH-058B	136A
WH-058C	136A
WH-058D	136A
WH-061	137A
WH-061A	137A
WH-061B	137A
WH-061C	137A
WH-061D	137A
WH-063	137A
WH-063A	137A
WH-063B	137A
WH-063C	137A
WH-063D	137A
WH-065	137A
WH-065A	137A
WH-065B	137A
WH-065C	137A
WH-065D	137A
WH-071	138A
WH-071A	138A
WH-071B	138A
WH-071C	138A
WH-071D	138A
WH-073	138A
WH-073A	138A
WH-073B	138A
WH-073C	138A
WH-073D	138A
WH-075	138A
WH-075A	138A
WH-075B	138A
WH-075C	138A
WH-075D	138A
WH-077	138A
WH-077A	138A
WH-077B	138A
WH-077C	138A
WH-077D	138A
WH-079	5072A
WH-079A	5072A
WH-079B	5072A
WH-079C	5072A
WH-079D	5072A
WH-081	5072A
WH-081A	5072A
WH-081B	5072A
WH-081C	5072A
WH-081D	5072A
WH-083	5072A
WH-083A	5072A
WH-083B	5072A
WH-083C	5072A
WH-083D	5072A
WH-085	5072A
WH-085A	5072A
WH-085B	5072A
WH-085C	5072A
WH-085D	5072A
WH-088	139A
WH-088A	139A
WH-088B	139A
WH-088C	139A
WH-088D	139A
WH-092	139A
WH-092A	139A
WH-092B	139A
WH-092C	139A
WH-092D	139A
WH-094	139A
WH-094A	139A
WH-094B	139A
WH-094C	139A
WH-094D	139A
WH-098	140A
WH-098A	140A
WH-098B	140A
WH-098C	140A
WH-098D	140A
WH-100	140A
WH-100A	140A
WH-100B	140A
WH-100C	140A
WH-100D	140A
WH-110	5074A
WH-110A	5074A
WH-110B	5074A
WH-110C	5074A
WH-110D	5074A
WH-115	141A
WH-115A	141A
WH-115B	141A
WH-115C	141A
WH-115D	141A
WH-120	142A
WH-120A	142A
WH-120B	142A
WH-120C	142A
WH-120D	142A
WH-125	143A
WH-125A	143A
WH-125B	143A
WH-125C	143A
WH-125D	143A
WH-130	143A
WH-130A	143A
WH-130B	143A
WH-130C	143A
WH-130D	143A
WH-140	144A
WH-140A	144A
WH-140B	144A
WH-140C	144A
WH-140D	144A
WH-150	145A
WH-150A	145A
WH-150B	145A
WH-150C	145A
WH-150D	145A
WH-157	5075A
WH-157A	5075A
WH-157B	5075A
WH-157C	5075A
WH-157D	5075A
WH-162	5075A
WH-162A	5075A
WH-162B	5075A
WH-162C	5075A
WH-162D	5075A
WH-167	5075A
WH-167A	5075A
WH-167B	5075A
WH-167C	5075A
WH-167D	5077A
WH-172	5077A
WH-172A	5077A
WH-172B	5077A
WH-172C	5077A
WH-172D	5077A
WH-177	5077A
WH-177A	5077A
WH-177B	5077A
WH-177C	5077A
WH-177D	5077A

PART NUMBER	NTE REPLACEMENT
WH-182	5077A
WH-182A	5077A
WH-182B	5077A
WH-182C	5077A
WH-182D	5077A
WH-230	5081A
WH-230A	5081A
WH-230B	5081A
WH-230C	5081A
WH-230D	5081A
WH-240	5081A
WH-240A	5081A
WH-240B	5081A
WH-240C	5081A
WH-240D	5081A
WH-250	5081A
WH-250A	5081A
WH-250B	5081A
WH-250C	5081A
WH-250D	5081A
WH-260	146A
WH-260A	146A
WH-260B	146A
WH-260C	146A
WH-260D	146A
WH-270	146A
WH-270A	146A
WH-270B	146A
WH-270C	146A
WH-270D	146A
WH-290	5084A
WH-290A	5084A
WH-290B	5084A
WH-290C	5084A
WH-290D	5084A
WH-300	5084A
WH-300A	5084A
WH-300B	5084A
WH-300C	5084A
WH-300D	5084A
WH-330	147A
WH-330A	147A
WH-330B	147A
WH-330C	147A
WH-330D	147A
WH-340	147A
WH-340A	147A
WH-340B	147A
WH-340C	147A
WH-340D	147A
WI-050	135A
WI-050A	135A
WI-050B	135A
WI-050C	135A
WI-050D	135A
WI-090	139A
WI-090A	139A
WI-090B	139A
WI-090C	139A
WI-090D	139A
WI-052	135A
WI-052A	135A
WI-052B	135A
WI-052C	135A
WI-052D	135A
WI-054	136A
WI-054A	136A
WI-054B	136A
WI-054C	136A
WI-054D	136A
WI-056	136A
WI-056A	136A
WI-056B	136A
WI-056C	136A
WI-056D	136A
WI-058	136A
WI-058A	136A
WI-058B	136A
WI-058C	136A
WI-058D	136A
WI-061	137A
WI-061A	137A
WI-061B	137A
WI-061C	137A
WI-061D	137A
WI-063	137A
WI-063A	137A
WI-063B	137A
WI-063C	137A
WI-063D	137A
WI-065	137A
WI-065A	137A
WI-065B	137A
WI-065C	137A
WI-065D	137A
WI-071	138A
WI-071A	138A
WI-071B	138A
WI-071C	138A
WI-071D	138A
WI-073	138A
WI-073A	138A
WI-073B	138A
WI-073C	138A
WI-073D	138A
WI-075	138A
WI-075A	138A
WI-075B	138A
WI-075C	138A
WI-075D	138A
WI-077	138A
WI-077A	138A
WI-077B	138A
WI-077C	138A
WI-077D	138A
WI-079	5072A
WI-079A	5072A
WI-079B	5072A
WI-079C	5072A
WI-079D	5072A
WI-081	5072A
WI-081A	5072A
WI-081B	5072A
WI-081C	5072A
WI-081D	5072A
WI-083A	5072A
WI-083B	5072A
WI-083C	5072A
WI-083D	5072A
WI-085	5072A
WI-085A	5072A
WI-085B	5072A
WI-085C	5072A
WI-085D	5072A
WI-086	139A
WI-086A	139A
WI-086B	139A
WI-086C	139A
WI-086D	139A
WI-092	139A
WI-092A	139A
WI-092B	139A
WI-092C	139A
WI-092D	139A
WI-094	139A
WI-094A	139A
WI-094B	139A
WI-094C	139A
WI-094D	139A
WI-098	140A
WI-098A	140A
WI-098B	140A
WI-098C	140A
WI-098D	140A
WI-100	140A
WI-100A	140A
WI-100B	140A
WI-100C	140A
WI-100D	140A
WI-110	5074A
WI-110A	5074A
WI-110B	5074A
WI-110C	5074A
WI-110D	5074A
WI-115	141A
WI-115A	141A
WI-115B	141A
WI-115C	141A
WI-115D	141A
WI-120	142A
WI-120A	142A
WI-120B	142A
WI-120C	142A
WI-120D	142A
WI-125	143A
WI-125A	143A
WI-125B	143A
WI-125C	143A
WI-125D	143A
WI-130	143A
WI-130A	143A
WI-130B	143A
WI-130C	143A
WI-130D	143A
WI-140	144A
WI-140A	144A
WI-140B	144A
WI-140C	144A
WI-140D	144A
WI-150	145A
WI-150A	145A
WI-150B	145A
WI-150C	145A
WI-150D	145A
WI-157	5075A
WI-157A	5075A
WI-157B	5075A
WI-157C	5075A
WI-157D	5075A
WI-162	5075A
WI-162A	5075A
WI-162B	5075A
WI-162C	5075A
WI-162D	5075A
WI-167	5075A
WI-167A	5075A
WI-167B	5075A
WI-167C	5075A
WI-167D	5075A
WI-172	5077A
WI-172A	5077A
WI-172B	5077A
WI-172C	5077A
WI-172D	5077A
WI-177	5077A
WI-177A	5077A
WI-177B	5077A
WI-177C	5077A
WI-177D	5077A
WI-182	5077A
WI-182A	5077A
WI-182B	5077A
WI-182C	5077A
WI-182D	5077A
WI-230	5081A
WI-230A	5081A
WI-230B	5081A
WI-230C	5081A
WI-230D	5081A
WI-240	5081A
WI-240A	5081A
WI-240B	5081A
WI-240C	5081A
WI-240D	5081A
WI-260	146A
WI-260A	146A
WI-260B	146A
WI-260C	146A
WI-260D	146A
WI-270	146A
WI-270A	146A
WI-270B	146A
WI-270C	146A
WI-270D	146A
WI-290	5084A
WI-290A	5084A
WI-290B	5084A
WI-290C	5084A
WI-290D	5084A
WI-300	5084A
WI-300A	5084A
WI-300B	5084A
WI-300C	5084A
WI-300D	5084A
WI-330	147A
WI-330A	147A
WI-330B	147A
WI-330C	147A
WI-330D	147A
WI-340	147A
WI-340A	147A
WI-340B	147A
WI-340C	147A
WI-340D	147A
WI-052	135A
WI-052A	135A
WI-052B	135A
WI-052C	135A
WI-052D	135A
WI-054	136A
WI-054A	136A
WI-054B	136A
WI-054C	136A
WI-054D	136A
WI-056	136A
WI-056A	136A
WI-056B	136A
WI-056C	136A
WI-056D	136A
WI-058	136A
WI-058A	136A
WI-058B	136A
WI-058C	136A
WI-058D	136A
WI-061	137A
WI-061A	137A
WI-061B	137A
WI-061C	137A
WI-061D	137A
WI-063	137A
WI-063A	137A
WI-063B	137A
WI-063C	137A
WI-063D	137A
WI-065	137A
WI-065A	137A
WI-065B	137A
WI-065C	137A
WI-065D	137A
WI-071	138A
WI-071A	138A
WI-071B	138A
WI-071C	138A
WI-071D	138A
WI-073	138A
WI-073A	138A
WI-073B	138A
WI-073C	138A
WI-073D	138A
WI-075	138A
WI-075A	138A
WI-075B	138A
WI-075C	138A
WI-075D	138A
WI-077	138A
WI-077A	138A
WI-077B	138A
WI-077C	138A
WI-077D	138A
WI-079	5072A
WI-079A	5072A
WI-079B	5072A
WI-079C	5072A
WI-079D	5072A
WI-081	5072A
WI-081A	5072A
WI-081B	5072A
WI-081C	5072A
WI-081D	5072A
WI-083	5072A
WI-083A	5072A
WI-083B	5072A
WI-083C	5072A
WI-083D	5072A
WI-085	5072A
WI-085A	5072A
WI-085B	5072A
WI-085C	5072A
WI-085D	5072A
WI-086	139A
WI-086A	139A
WI-086B	139A
WI-086C	139A
WI-086D	139A
WI-092	139A
WI-092A	139A
WI-092B	139A
WI-092C	139A
WI-092D	139A
WI-094	139A
WI-094A	139A
WI-094B	139A
WI-094C	139A
WI-094D	139A
WI-098	140A
WI-098A	140A
WI-098B	140A
WI-098C	140A
WI-098D	140A
WI-100	140A
WI-100A	140A
WI-100B	140A
WI-100C	140A
WI-100D	140A
WI-110	5074A
WI-110A	5074A
WI-110B	5074A
WI-110C	5074A
WI-110D	5074A
WI-115	141A
WI-115A	141A
WI-115B	141A
WI-115C	141A
WI-115D	141A
WI-120	142A
WI-120A	142A
WI-120B	142A
WI-120C	142A
WI-120D	142A
WI-125	143A
WI-125A	143A
WI-125B	143A
WI-125C	143A
WI-125D	143A
WI-130	143A
WI-130A	143A
WI-130B	143A
WI-130C	143A
WI-130D	143A
WI-140	144A
WI-140A	144A
WI-140B	144A
WI-140C	144A
WI-140D	144A
WI-150	145A
WI-150A	145A
WI-150B	145A
WI-150C	145A
WI-150D	145A
WI-157	5075A
WI-157A	5075A
WI-157B	5075A
WI-157C	5075A
WI-157D	5075A
WI-162	5075A
WI-162A	5075A
WI-162B	5075A
WI-162C	5075A
WI-162D	5075A
WI-167	5075A
WI-167A	5075A
WI-167B	5075A
WI-167C	5075A
WI-167D	5075A
WI-172	5077A
WI-172A	5077A
WI-172B	5077A
WI-172C	5077A
WI-172D	5077A
WI-177	5077A
WI-177A	5077A
WI-177B	5077A
WI-177C	5077A
WI-177D	5077A
WI-182	5077A
WI-182A	5077A
WI-182B	5077A
WI-182C	5077A
WI-182D	5077A
WI-230	5081A
WI-230A	5081A
WI-230B	5081A
WI-230C	5081A
WJ-083A	5072A
WJ-083B	5072A
WJ-083C	5072A
WJ-083D	5072A
WJ-085	5072A
WJ-085B	5072A
WJ-085C	5072A
WJ-085D	5072A
WJ-088	139A
WJ-088A	139A
WJ-088B	139A
WJ-088C	139A
WJ-088D	139A
WJ-092	139A
WJ-092A	139A
WJ-092B	139A
WJ-092C	139A
WJ-092D	139A
WJ-094	139A
WJ-094A	139A
WJ-094B	139A
WJ-094C	139A
WJ-094D	139A
WJ-098	140A
WJ-098A	140A
WJ-098B	140A
WJ-098C	140A
WJ-098D	140A
WJ-100	140A
WJ-100A	140A
WJ-100B	140A
WJ-100C	140A
WJ-100D	140A
WJ-110	5074A
WJ-110A	5074A
WJ-110B	5074A
WJ-110C	5074A
WJ-110D	5074A
WJ-115	141A
WJ-115A	141A
WJ-115B	141A
WJ-115C	141A
WJ-115D	141A
WJ-120	142A
WJ-120A	142A
WJ-120B	142A
WJ-120C	142A
WJ-120D	142A
WJ-125	143A
WJ-125A	143A
WJ-125B	143A
WJ-125C	143A
WJ-125D	143A
WJ-130	143A
WJ-130A	143A
WJ-130B	143A
WJ-130C	143A
WJ-130D	143A
WJ-140	144A
WJ-140A	144A
WJ-140B	144A
WJ-140C	144A
WJ-140D	144A
WJ-150	145A
WJ-150A	145A
WJ-150B	145A
WJ-150C	145A
WJ-150D	145A
WJ-157	5075A
WJ-157A	5075A
WJ-157B	5075A
WJ-157C	5075A
WJ-157D	5075A
WJ-162	5075A
WJ-162A	5075A
WJ-162B	5075A
WJ-162C	5075A
WJ-162D	5075A
WJ-167	5075A
WJ-167A	5075A
WJ-167B	5075A
WJ-167C	5075A
WJ-167D	5075A
WJ-172	5077A
WJ-172A	5077A
WJ-172B	5077A
WJ-172C	5077A
WJ-172D	5077A
WJ-177	5077A
WJ-177A	5077A
WJ-177B	5077A
WJ-177C	5077A
WJ-177D	5077A
WJ-182	5077A
WJ-182A	5077A
WJ-182B	5077A
WJ-182C	5077A
WJ-182D	5077A
WJ-230	5081A
WJ-230A	5081A
WJ-230B	5081A
WJ-230C	5081A
WJ-230D	5081A
WJ-240	5081A
WJ-240A	5081A
WJ-240B	5081A
WJ-240C	5081A
WJ-240D	5081A
WJ-250	5081A
WJ-250A	5081A
WJ-250B	5081A
WJ-250C	5081A
WJ-250D	5081A
WJ-260	146A
WJ-260A	146A
WJ-260B	146A
WJ-260C	146A
WJ-260D	146A
WJ-270	146A
WJ-270A	146A
WJ-270B	146A
WJ-270C	146A
WJ-270D	146A
WJ-290	5084A
WJ-290A	5084A
WJ-290B	5084A
WJ-290C	5084A
WJ-290D	5084A
WJ-300	5084A
WJ-300A	5084A
WJ-300B	5084A
WJ-300C	5084A
WJ-300D	5084A
WJ-330	147A
WJ-330A	147A
WJ-330B	147A
WJ-330C	147A
WJ-330D	147A
WJ-340	147A
WJ-340A	147A
WJ-340B	147A
WJ-340C	147A
WJ-340D	147A
WK5458	105
WK5459	105
WK-050	135A
WK-050A	135A
WK-050B	135A
WK-050C	135A
WK-050D	135A
WK-090	139A
WK-090A	139A
WK-090B	139A
WK-090C	139A
WK-090D	139A
WK-052	135A
WK-052A	135A
WK-052B	135A
WK-052C	135A
WK-052D	135A
WK-054	136A
WK-054A	136A
WK-054B	136A
WK-054C	136A
WK-054D	136A
WK-056	136A
WK-056A	136A
WK-056B	136A
WK-056C	136A
WK-056D	136A
WK-058	136A
WK-058A	136A
WK-058B	136A
WK-058C	136A
WK-058D	136A
WK-061	137A
WK-061A	137A
WK-061B	137A
WK-061C	137A
WK-061D	137A
WK-063	137A
WK-063A	137A
WK-063B	137A
WK-063C	137A
WK-063D	137A
WK-065	139A
WK-065A	137A
WK-065B	137A
WK-065C	137A
WK-065D	137A
WK-071	138A
WK-071A	138A
WK-071B	138A
WK-071C	138A
WK-071D	138A
WK-073	138A
WK-073A	138A
WK-073B	138A
WK-073C	138A
WK-073D	138A
WK-075	138A
WK-075A	138A
WK-075B	138A
WK-075C	138A
WK-075D	138A
WK-077	138A
WK-077A	138A
WK-077C	138A
WK-077D	138A
WK-079	5072A
WK-079A	5072A
WK-079B	5072A
WK-079C	5072A
WK-079D	5072A
WK-081	5072A
WK-081A	5072A
WK-081B	5072A
WK-081C	5072A
WK-081D	5072A
WK-083	5072A
WK-083A	5072A
WK-083B	5072A
WK-083C	5072A
WK-083D	5072A
WK-085	5072A
WK-085A	5072A
WK-085B	5072A
WK-085C	5072A
WK-085D	5072A
WK-088	139A
WK-088A	139A
WK-088B	139A
WK-088C	139A
WK-088D	139A
WK-092	139A
WK-092A	139A
WK-092B	139A
WK-092C	139A
WK-092D	139A
WK-094	139A
WK-094A	139A
WK-094B	139A
WK-094C	139A
WK-094D	139A
WK-098	140A
WK-098A	140A
WK-098B	140A
WK-098C	140A
WK-098D	140A
WK-100	140A
WK-100B	140A
WK-100C	140A
WK-100D	140A
WK-110	5074A
WK-110A	5074A
WK-110B	5074A
WK-110C	5074A
WK-110D	5074A
WK-115	141A
WK-115A	141A
WK-115B	141A
WK-115C	141A
WK-115D	141A
WK-120	142A
WK-120A	142A
WK-120B	142A
WK-120C	142A
WK-120D	142A
WK-125	143A
WK-125A	143A
WK-125B	143A
WK-125C	143A
WK-125D	143A
WK-130	143A
WK-130A	143A
WK-130B	143A
WK-130C	143A
WK-130D	143A
WK-140	144A
WK-140A	144A
WK-140B	144A
WK-140C	144A
WK-140D	144A
WK-150	145A
WK-150A	145A
WK-150B	145A
WK-150C	145A
WK-150D	145A
WK-157	5075A
WK-157A	5075A
WK-157B	5075A
WK-157C	5075A
WK-157D	5075A
WK-162	5075A
WK-162A	5075A
WK-162B	5075A
WK-162C	5075A
WK-162D	5075A
WK-167	5075A
WK-167A	5075A
WK-167B	5075A
WK-167C	5075A
WK-167D	5075A
WK-172	5077A
WK-172A	5077A
WK-172B	5077A
WK-172C	5077A
WK-172D	5077A
WK-177	5077A
WK-177A	5077A
WK-177B	5077A
WK-177C	5077A
WK-177D	5077A
WK-182	5077A
WK-182A	5077A
WK-182B	5077A
WK-182C	5077A
WK-182D	5077A
WK-230	5081A
WK-230A	5081A
WK-230B	5081A
WK-230C	5081A
WK-230D	5081A
WK-240	5081A
WK-240A	5081A
WK-240B	5081A
WK-240C	5081A
WK-240D	5081A
WK-250	5081A
WK-250A	5081A
WK-250B	5081A
WK-250C	5081A
WK-250D	5081A
WK-260	146A
WK-260A	146A
WK-260B	146A
WK-260C	146A
WK-260D	146A
WK-270	146A
WK-270A	146A
WK-270B	146A
WK-270C	146A
WK-270D	146A
WK-290	5084A
WK-290A	5084A
WK-290B	5084A
WK-290C	5084A
WK-290D	5084A
WK-300	5084A
WK-300A	5084A
WK-300B	5084A
WK-300C	5084A
WK-300D	5084A
WK-330	147A
WK-330A	147A
WK-330B	147A
WK-330C	147A
WK-330D	147A
WK-340	147A
WK-340A	147A
WK-340B	147A
WK-340C	147A
WK-340D	147A
WK-5457	105
WL005M	5304
WL01	5304
WL02M	5304
WL04M	5304
WL06M	5305
WL08M	5306
WL10M	5307
WL-050	135A
WL-050A	135A
WL-050B	135A
WL-050C	135A
WL-050D	135A
WL-090	139A
WL-090A	139A
WL-090B	139A
WL-090C	139A
WL-090D	139A
WL-01	5304
WL-052	135A
WL-052A	135A
WL-052B	135A
WL-052C	135A
WL-052D	135A
WL-054	136A
WL-054A	136A
WL-054B	136A
WL-054C	136A
WL-054D	136A
WL-056	136A
WL-056A	136A
WL-056B	136A
WL-056C	136A
WL-056D	136A
WL-058	136A
WL-058A	136A
WL-058B	136A
WL-058C	136A
WL-058D	136A
WL-061	137A
WL-061A	137A
WL-061B	137A
WL-061C	137A
WL-061D	137A
WL-063	137A
WL-063A	137A
WL-063B	137A
WL-063C	137A
WL-063D	137A
WL-065	137A
WL-065A	137A
WL-065B	137A
WL-065C	137A
WL-065D	137A
WL-071	138A
WL-071A	138A
WL-071B	138A
WL-071C	138A
WL-071D	138A
WL-073	138A
WL-073A	138A
WL-073B	138A
WL-073C	138A
WL-073D	138A
WL-075	138A
WL-075A	138A
WL-075B	138A
WL-075C	138A
WL-075D	138A
WL-077	138A
WL-077A	138A
WL-077B	138A
WL-077C	138A
WL-077D	138A
WL-079	138A
WL-079A	5072A
WL-079B	5072A
WL-079C	5072A
WL-079D	5072A
WL-081	5072A
WL-081A	5072A
WL-081B	5072A
WL-081C	5072A
WL-081D	5072A
WL-083	5072A
WL-083A	5072A
WL-083B	5072A
WL-083C	5072A
WL-083D	5072A
WL-085	5072A
WL-085A	5072A
WL-085B	5072A
WL-085C	5072A

PART NUMBER	NTE REPLACEMENT
WL-085D	5072A
WL-088	139A
WL-088A	139A
WL-088B	139A
WL-088C	139A
WL-088D	139A
WL-092	139A
WL-092A	139A
WL-092B	139A
WL-092C	139A
WL-092D	139A
WL-094	139A
WL-094A	139A
WL-094B	139A
WL-094C	139A
WL-094D	139A
WL-098	140A
WL-098A	140A
WL-098B	140A
WL-098C	140A
WL-098D	140A
WL-100	140A
WL-100A	140A
WL-100B	140A
WL-100C	140A
WL-100D	140A
WL-110	5074A
WL-110A	5074A
WL-110B	5074A
WL-110C	5074A
WL-110D	5074A
WL-115	141A
WL-115A	141A
WL-115B	141A
WL-115C	141A
WL-115D	141A
WL-120	142A
WL-120A	142A
WL-120B	142A
WL-120C	142A
WL-120D	142A
WL-125	143A
WL-125A	143A
WL-125B	143A
WL-125C	143A
WL-125D	143A
WL-130	143A
WL-130A	143A
WL-130B	143A
WL-130C	143A
WL-130D	143A
WL-140	144A
WL-140A	144A
WL-140B	144A
WL-140C	144A
WL-140D	144A
WL-150	145A
WL-150A	145A
WL-150B	145A
WL-150C	145A
WL-150D	145A
WL-157	5075A
WL-157A	5075A
WL-157B	5075A
WL-157C	5075A
WL-157D	5075A
WL-162	5075A
WL-162A	5075A
WL-162B	5075A
WL-162C	5075A
WL-162D	5075A
WL-167	5075A
WL-167A	5075A
WL-167B	5075A
WL-167C	5075A
WL-167D	5075A
WL-172	5077A
WL-172A	5077A
WL-172B	5077A
WL-172C	5077A
WL-172D	5077A
WL-177	5077A
WL-177A	5077A
WL-177B	5077A
WL-177C	5077A
WL-177D	5077A
WL-182	5077A
WL-182A	5077A
WL-182B	5077A
WL-182C	5077A
WL-182D	5077A
WL-230	5081A
WL-230A	5081A
WL-230B	5081A
WL-230C	5081A
WL-230D	5081A
WL-240	5081A
WL-240A	5081A
WL-240B	5081A
WL-240C	5081A
WL-240D	5081A
WL-250	5081A
WL-250A	5081A
WL-250B	5081A
WL-250C	5081A
WL-250D	5081A
WL-260	146A
WL-260A	146A
WL-260B	146A
WL-260C	146A
WL-260D	146A
WL-270	146A
WL-270A	146A
WL-270B	146A
WL-270C	146A
WL-270D	146A
WL-290	5084A
WL-290A	5084A
WL-290B	5084A
WL-290C	5084A
WL-290D	5084A
WL-300	5084A
WL-300A	5084A
WL-300B	5084A
WL-300C	5084A
WL-300D	5084A
WL-330	147A
WL-330A	147A
WL-330B	147A
WL-330C	147A
WL-330D	147A
WL-340	147A
WL-340A	147A
WL-340B	147A
WL-340C	147A
WL-340D	147A
WM-050	135A
WM-050A	135A
WM-050B	135A
WM-050C	135A
WM-050D	135A
WM-090	139A
WM-090A	139A
WM-090B	139A
WM-090C	139A
WM-090D	139A
WM-052	135A
WM-052A	135A
WM-052B	135A
WM-052C	135A
WM-052D	135A
WM-054	136A
WM-054A	136A
WM-054B	136A
WM-054C	136A
WM-054D	136A
WM-056	136A
WM-056A	136A
WM-056B	136A
WM-056C	136A
WM-056D	136A
WM-058	136A
WM-058A	136A
WM-058B	136A
WM-058C	136A
WM-058D	136A
WM-061	137A
WM-061A	137A
WM-061B	137A
WM-061C	137A
WM-061D	137A
WM-063	137A
WM-063A	137A
WM-063B	137A
WM-063C	137A
WM-063D	137A
WM-065	137A
WM-065A	137A
WM-065B	137A
WM-065C	137A
WM-065D	137A
WM-071	138A
WM-071A	138A
WM-071B	138A
WM-071C	138A
WM-071D	138A
WM-073	138A
WM-073A	138A
WM-073B	138A
WM-073C	138A
WM-073D	138A
WM-075	138A
WM-075A	138A
WM-075B	138A
WM-075C	138A
WM-075D	138A
WM-077	138A
WM-077A	138A
WM-077B	138A
WM-077C	138A
WM-077D	138A
WM-079	5072A
WM-079A	5072A
WM-079B	5072A
WM-079C	5072A
WM-079D	5072A
WM-081	5072A
WM-081A	5072A
WM-081B	5072A
WM-081C	5072A
WM-081D	5072A
WM-083	5072A
WM-083A	5072A
WM-083B	5072A
WM-083C	5072A
WM-083D	5072A
WM-085	5072A
WM-085A	5072A
WM-085B	5072A
WM-085C	5072A
WM-085D	5072A
WM-088	139A
WM-088A	139A
WM-088B	139A
WM-088C	139A
WM-088D	139A
WM-092	139A
WM-092A	139A
WM-092B	139A
WM-092C	139A
WM-092D	139A
WM-094	139A
WM-094A	139A
WM-094B	139A
WM-094C	139A
WM-094D	139A
WM-098	140A
WM-098A	140A
WM-098B	140A
WM-098C	140A
WM-098D	140A
WM-100	140A
WM-100A	140A
WM-100B	140A
WM-100C	140A
WM-100D	140A
WM-110	5074A
WM-110A	5074A
WM-110B	5074A
WM-110C	5074A
WM-110D	5074A
WM-115	141A
WM-115A	141A
WM-115B	141A
WM-115C	141A
WM-115D	141A
WM-120	142A
WM-120A	142A
WM-120B	142A
WM-120C	142A
WM-120D	142A
WM-125	143A
WM-125A	143A
WM-125B	143A
WM-125C	143A
WM-125D	143A
WM-130	143A
WM-130A	143A
WM-130B	143A
WM-130C	143A
WM-130D	143A
WM-140	144A
WM-140A	144A
WM-140B	144A
WM-140C	144A
WM-140D	144A
WM-150	145A
WM-150A	145A
WM-150B	145A
WM-150C	145A
WM-150D	145A
WM-157	5075A
WM-157A	5075A
WM-157B	5075A
WM-157C	5075A
WM-157D	5075A
WM-162	5075A
WM-162A	5075A
WM-162B	5075A
WM-162C	5075A
WM-162D	5075A
WM-167	5075A
WM-167A	5075A
WM-167B	5075A
WM-167C	5075A
WM-167D	5075A
WM-172	5077A
WM-172A	5077A
WM-172B	5077A
WM-172C	5077A
WM-172D	5077A
WM-177	5077A
WM-177A	5077A
WM-177B	5077A
WM-177C	5077A
WM-177D	5077A
WM-182	5077A
WM-182A	5077A
WM-182B	5077A
WM-182C	5077A
WM-182D	5077A
WM-230	5081A
WM-230A	5081A
WM-230B	5081A
WM-230C	5081A
WM-230D	5081A
WM-240	5081A
WM-240A	5081A
WM-240B	5081A
WM-240C	5081A
WM-240D	5081A
WM-250	5081A
WM-250A	5081A
WM-250B	5081A
WM-250C	5081A
WM-250D	5081A
WM-260	146A
WM-260A	146A
WM-260B	146A
WM-260C	146A
WM-260D	146A
WM-270	146A
WM-270A	146A
WM-270B	146A
WM-270C	146A
WM-270D	146A
WM-290	5084A
WM-290A	5084A
WM-290B	5084A
WM-290C	5084A
WM-290D	5084A
WM-300	5084A
WM-300A	5084A
WM-300B	5084A
WM-300C	5084A
WM-300D	5084A
WM-330	147A
WM-330A	147A
WM-330B	147A
WM-330C	147A
WM-330D	147A
WM-340	147A
WM-340A	147A
WM-340B	147A
WM-340C	147A
WM-340D	147A
WN-050	135A
WN-050A	135A
WN-050B	135A
WN-050C	135A
WN-050D	135A
WN-090	139A
WN-090A	139A
WN-090B	139A
WN-090C	139A
WN-090D	139A
WN-052	135A
WN-052A	135A
WN-052B	135A
WN-052C	135A
WN-052D	135A
WN-054	136A
WN-054A	136A
WN-054B	136A
WN-054C	136A
WN-054D	136A
WN-056	136A
WN-056A	136A
WN-056B	136A
WN-056C	136A
WN-056D	136A
WN-058	136A
WN-058A	136A
WN-058B	136A
WN-058C	136A
WN-058D	136A
WN-061	137A
WN-061A	137A
WN-061B	137A
WN-061C	137A
WN-061D	137A
WN-063	137A
WN-063A	137A
WN-063B	137A
WN-063C	137A
WN-063D	137A
WN-065	137A
WN-065A	137A
WN-065B	137A
WN-065C	137A
WN-065D	137A
WN-071	138A
WN-071A	138A
WN-071B	138A
WN-071C	138A
WN-071D	138A
WN-073	138A
WN-073A	138A
WN-073B	138A
WN-073C	138A
WN-073D	138A
WN-075	138A
WN-075A	138A
WN-075B	138A
WN-075C	138A
WN-075D	138A
WN-077	138A
WN-077A	138A
WN-077B	138A
WN-077C	138A
WN-077D	138A
WN-079	5072A
WN-079A	5072A
WN-079B	5072A
WN-079C	5072A
WN-079D	5072A
WN-081	5072A
WN-081A	5072A
WN-081B	5072A
WN-081C	5072A
WN-081D	5072A
WN-083	5072A
WN-083A	5072A
WN-083B	5072A
WN-083C	5072A
WN-083D	5072A
WN-085	5072A
WN-085A	5072A
WN-085B	5072A
WN-085C	5072A
WN-085D	5072A
WN-088	139A
WN-088A	139A
WN-088B	139A
WN-088C	139A
WN-088D	139A
WN-092	139A
WN-092A	139A
WN-092B	139A
WN-092C	139A
WN-092D	139A
WN-094	139A
WN-094A	139A
WN-094B	139A
WN-094C	139A
WN-094D	139A
WN-098	140A
WN-098A	140A
WN-098B	140A
WN-098C	140A
WN-098D	140A
WN-100	140A
WN-100A	140A
WN-100B	140A
WN-100C	140A
WN-100D	140A
WN-110	5074A
WN-110A	5074A
WN-110B	5074A
WN-110C	5074A
WN-110D	5074A
WN-115	141A
WN-115A	141A
WN-115B	141A
WN-115C	141A
WN-115D	141A
WN-120	142A
WN-120A	142A
WN-120B	142A
WN-120C	142A
WN-120D	142A
WN-125	143A
WN-125A	143A
WN-125B	143A
WN-125C	143A
WN-125D	143A
WN-130	143A
WN-130A	143A
WN-130B	143A
WN-130C	143A
WN-130D	143A
WN-140	144A
WN-140A	144A
WN-140B	144A
WN-140C	144A
WN-140D	144A
WN-150	145A
WN-150A	145A
WN-150B	145A
WN-150C	145A
WN-150D	145A
WN-157	5075A
WN-157A	5075A
WN-157B	5075A
WN-157C	5075A
WN-157D	5075A
WN-162	5075A
WN-162A	5075A
WN-162B	5075A
WN-162C	5075A
WN-162D	5075A
WN-167	5075A
WN-167A	5075A
WN-167B	5075A
WN-167C	5075A
WN-167D	5075A
WN-170D	5075A
WN-177	5077A
WN-177A	5077A
WN-177B	5077A
WN-177C	5077A
WN-177D	5077A
WN-182	5077A
WN-182A	5077A
WN-182B	5077A
WN-182C	5077A
WN-182D	5077A
WN-230	5081A
WN-230A	5081A
WN-230B	5081A
WN-230C	5081A
WN-230D	5081A
WN-240	5081A
WN-240A	5081A
WN-240B	5081A
WN-240C	5081A
WN-240D	5081A
WN-250	5081A
WN-250A	5081A
WN-250B	5081A
WN-250C	5081A
WN-250D	5081A
WN-260	146A
WN-260A	146A
WN-260B	146A
WN-260C	146A
WN-260D	146A
WN-270	146A
WN-270A	146A
WN-270B	146A
WN-270C	146A
WN-270D	146A
WN-290	5084A
WN-290A	508
WN-290B	5084A
WN-290C	5084A
WN-290D	5084A
WN-300	5084A
WN-300A	5084A
WN-300B	5084A
WN-300C	5084A
WN-300D	5084A
WN-330	147A
WN-330A	147A
WN-330B	147A
WN-330C	147A
WN-330D	147A
WN-340	147A
WN-340A	147A
WN-340B	147A
WN-340C	147A
WN-340D	147A
W005	5304
W01	167
W01M	5304
W02	5304
W02M	5304
W03BTA	552
W04	5304
W04M	5304
W06	5305
W06-B	116
W06A	116
W06A-Z	116
W06B	116
W06M	116
W08	5306
W08M	5306
W0110C	5074A
W0115D	141A
W0130	143A
WO-050	135A
WO-050A	135A
WO-050B	135A
WO-050C	135A
WO-050D	135A
WO-090	139A
WO-090A	139A
WO-090B	139A
WO-090C	139A
WO-090D	139A
WO-052	135A
WO-052A	135A
WO-052B	135A
WO-052C	135A
WO-052D	135A
WO-054	136A
WO-054A	136A
WO-054B	136A
WO-054C	136A
WO-054D	136A
WO-056	136A
WO-056A	136A
WO-056B	136A
WO-056C	136A
WO-056D	136A
WO-058	136A
WO-058A	136A
WO-058B	136A
WO-058C	136A
WO-058D	136A
WO-061	137A
WO-061A	137A
WO-061B	137A
WO-061C	137A
WO-061D	137A
WO-063	137A
WO-063A	137A
WO-063B	137A
WO-063C	137A
WO-063D	137A
WO-065	137A
WO-065A	137A
WO-065B	137A
WO-065C	137A
WO-065D	137A
WO-071	138A
WO-071A	138A
WO-071B	138A
WO-071C	138A
WO-071D	138A
WO-073	138A
WO-073A	138A
WO-073B	138A
WO-073C	138A
WO-073D	138A
WO-075	138A
WO-075A	138A
WO-075B	138A
WO-075C	138A
WO-075D	138A
WO-077	138A
WO-077A	138A
WO-077B	138A
WO-077C	138A
WO-077D	138A
WO-079	5072A
WO-079A	5072A
WO-079B	5072A
WO-079C	5072A
WO-079D	5072A
WO-081	5072A
WO-081A	5072A
WO-081B	5072A
WO-081C	5072A
WO-081D	5072A
WO-083	5072A
WO-083A	5072A
WO-083B	5072A
WO-083C	5072A
WO-083D	5072A
WO-085	5072A
WO-085A	5072A
WO-085B	5072A
WO-085C	5072A
WO-085D	5072A
WO-088	139A
WO-088A	139A
WO-088B	139A
WO-088C	139A
WO-088D	139A
WO-092	139A
WO-092A	139A
WO-092B	139A
WO-092C	139A
WO-092D	139A
WO-094	139A
WO-094A	139A
WO-094B	139A
WO-094C	139A
WO-094D	139A
WO-098	140A
WO-098A	140A
WO-098B	140A
WO-098C	140A
WO-098D	140A
WO-6A	116
WO-6B	116
WO-61	137A
WO-100A	140A
WO-100B	140A
WO-100C	140A
WO-100D	140A
WO-110	5074A
WO-110A	5074A
WO-110B	5074A
WO-110D	5074A
WO-115	141A
WO-115A	141A
WO-115B	141A
WO-115C	141A
WO-115D	141A
WO-120	142A
WO-120A	142A
WO-120B	142A
WO-120C	142A
WO-120D	142A
WO-125	143A
WO-125A	143A
WO-125B	143A
WO-125C	143A
WO-125D	143A
WO-130A	143A
WO-130B	143A
WO-130C	143A
WO-130D	143A
WO-140	144A
WO-140A	144A
WO-140B	144A
WO-140C	144A
WO-140D	144A
WO-150	145A
WO-150A	145A
WO-150B	145A
WO-150C	145A
WO-150D	145A
WO-157	5075A
WO-157A	5075A
WO-157B	5075A
WO-157C	5075A
WO-157D	5075A
WO-162	5075A
WO-162A	5075A
WO-162B	5075A
WO-162C	5075A
WO-162D	5075A
WO-167	5075A
WO-167A	5075A
WO-167B	5075A
WO-167C	5075A
WO-167D	5075A
WO-172	5077A
WO-172A	5077A
WO-172B	5077A
WO-172C	5077A
WO-172D	5077A
WO-177	5077A
WO-177A	5077A
WO-177B	5077A
WO-177C	5077A
WO-177D	5077A
WO-182	5077A
WO-182A	5077A
WO-182B	5077A
WO-182C	5077A
WO-182D	5077A
WO-230	5081A
WO-230A	5081A
WO-230B	5081A
WO-230C	5081A
WO-230D	5081A
WO-240	5081A
WO-240A	5081A
WO-240B	5081A
WO-240C	5081A
WO-240D	5081A
WO-250	5081A
WO-250A	5081A
WO-250B	5081A
WO-250C	5081A
WO-250D	5081A
WO-260	146A
WO-260A	146A
WO-260B	146A
WO-260C	146A
WO-260D	146A
WO-270	146A
WO-270A	146A
WO-270B	146A
WO-270C	146A
WO-270D	146A
WO-290	5084A
WO-290A	5084A
WO-290B	5084A
WO-290C	5084A
WO-290D	5084A
WO-300	5084A
WO-300A	5084A
WO-300B	5084A
WO-300C	5084A

PART NUMBER	NTE REPLACEMENT
WO-300D	5084A
WO-330	147A
WO-330A	147A
WO-330B	147A
WO-330C	147A
WO-330D	147A
WO-340	147A
WO-340A	147A
WO-340B	147A
WO-340C	147A
WO-340D	147A
WO05	5304
WP15X19	375
WP-050	135A
WP-050A	135A
WP-050B	135A
WP-050C	135A
WP-050D	135A
WP-090	139A
WP-090A	139A
WP-090B	139A
WP-090C	139A
WP-090D	139A
WP-052	135A
WP-052A	135A
WP-052B	135A
WP-052C	135A
WP-052D	136A
WP-054	136A
WP-054A	136A
WP-054B	136A
WP-054C	136A
WP-054D	136A
WP-056	136A
WP-056A	136A
WP-056B	136A
WP-056C	136A
WP-056D	136A
WP-058	136A
WP-058A	136A
WP-058B	136A
WP-058C	136A
WP-058D	136A
WP-061	137A
WP-061A	137A
WP-061B	137A
WP-061C	137A
WP-061D	137A
WP-063	137A
WP-063A	137A
WP-063B	137A
WP-063C	137A
WP-063D	137A
WP-065	137A
WP-065A	137A
WP-065B	137A
WP-065C	137A
WP-065D	137A
WP-071	138A
WP-071A	138A
WP-071B	138A
WP-071C	138A
WP-071D	138A
WP-073	138A
WP-073A	138A
WP-073B	138A
WP-073C	138A
WP-073D	138A
WP-075	138A
WP-075A	138A
WP-075B	138A
WP-075C	138A
WP-075D	138A
WP-077	138A
WP-077A	138A
WP-077B	138A
WP-077C	138A
WP-077D	138A
WP-079	5072A
WP-079A	5072A
WP-079B	5072A
WP-079C	5072A
WP-079D	5072A
WP-081	5072A
WP-081A	5072A
WP-081B	5072A
WP-081C	5072A
WP-081D	5072A
WP-083	5072A
WP-083A	5072A
WP-083B	5072A
WP-083C	5072A
WP-083D	5072A
WP-085	5072A
WP-085A	5072A
WP-085B	5072A
WP-085C	5072A
WP-085D	5072A
WP-088	139A
WP-088A	139A
WP-088B	139A
WP-088C	139A
WP-088D	139A
WP-092	139A
WP-092A	139A
WP-092B	139A
WP-092C	139A
WP-092D	139A
WP-094	139A
WP-094A	139A
WP-094B	139A
WP-094C	139A
WP-094D	139A
WP-098	140A
WP-098A	140A
WP-098B	140A
WP-098C	140A
WP-098D	140A
WP-100	140A
WP-100A	140A
WP-100B	140A
WP-100C	140A
WP-100D	140A
WP-110	5074A
WP-110A	5074A
WP-110B	5074A
WP-110C	5074A
WP-110D	5074A
WP-115	141A
WP-115A	141A
WP-115B	141A
WP-115C	141A
WP-115D	141A
WP-120	142A
WP-120A	142A
WP-120B	142A
WP-120C	142A
WP-120D	142A
WP-125	143A
WP-125A	143A
WP-125B	143A
WP-125C	143A
WP-125D	143A
WP-130	143A
WP-130A	143A
WP-130B	143A
WP-130C	143A
WP-130D	143A
WP-140	144A
WP-140A	144A
WP-140B	144A
WP-140C	144A
WP-140D	144A
WP-150	145A
WP-150A	145A
WP-150B	145A
WP-150C	145A
WP-150D	145A
WP-157	5075A
WP-157A	5075A
WP-157B	5075A
WP-157C	5075A
WP-157D	5075A
WP-162	5075A
WP-162A	5075A
WP-162B	5075A
WP-162C	5075A
WP-162D	5075A
WP-167	5075A
WP-167A	5075A
WP-167B	5075A
WP-167C	5075A
WP-167D	5075A
WP-172	5077A
WP-172A	5077A
WP-172B	5077A
WP-172C	5077A
WP-172D	5077A
WP-177	5077A
WP-177A	5077A
WP-177B	5077A
WP-177C	5077A
WP-177D	5077A
WP-182	5077A
WP-182A	5077A
WP-182B	5077A
WP-182C	5077A
WP-182D	5077A
WP-230	5081A
WP-230A	5081A
WP-230B	5081A
WP-230C	5081A
WP-230D	5081A
WP-240	5081A
WP-240A	5081A
WP-240B	5081A
WP-240C	5081A
WP-240D	5081A
WP-250	5081A
WP-250A	5081A
WP-250B	5081A
WP-250C	5081A
WP-250D	5081A
WP-260	146A
WP-260A	146A
WP-260B	146A
WP-260C	146A
WP-260D	146A
WP-270	146A
WP-270A	146A
WP-270B	146A
WP-270C	146A
WP-270D	146A
WP-290	5084A
WP-290A	5084A
WP-290B	5084A
WP-290C	5084A
WP-290D	5084A
WP-300	5084A
WP-300A	5084A
WP-300B	5084A
WP-300C	5084A
WP-300D	5084A
WP-330	147A
WP-330A	147A
WP-330B	147A
WP-330C	147A
WP-330D	147A
WP-340	147A
WP-340A	147A
WP-340B	147A
WP-340C	147A
WP-340D	147A
WQ-050	135A
WQ-050A	135A
WQ-050B	135A
WQ-050C	135A
WQ-050D	135A
WQ-090	139A
WQ-090A	139A
WQ-090B	139A
WQ-090C	139A
WQ-090D	139A
WQ-052	135A
WQ-052A	135A
WQ-052B	135A
WQ-052C	135A
WQ-052D	135A
WQ-054	136A
WQ-054A	136A
WQ-054B	136A
WQ-054C	136A
WQ-054D	136A
WQ-056	136A
WQ-056A	136A
WQ-056B	136A
WQ-056C	136A
WQ-056D	136A
WQ-058	136A
WQ-058A	136A
WQ-058B	136A
WQ-058C	136A
WQ-058D	136A
WQ-063	137A
WQ-063A	137A
WQ-063B	137A
WQ-063C	137A
WQ-063D	137A
WQ-065	137A
WQ-065A	137A
WQ-065B	137A
WQ-065C	137A
WQ-065D	137A
WQ-071	138A
WQ-071A	138A
WQ-071B	138A
WQ-071C	138A
WQ-071D	138A
WQ-073	138A
WQ-073A	138A
WQ-073B	138A
WQ-073C	138A
WQ-073D	138A
WQ-075	138A
WQ-075A	138A
WQ-075B	138A
WQ-075C	138A
WQ-075D	138A
WQ-077	138A
WQ-077A	138A
WQ-077B	138A
WQ-077C	138A
WQ-077D	138A
WQ-079	5072A
WQ-079A	5072A
WQ-079B	5072A
WQ-079C	5072A
WQ-079D	5072A
WQ-081	5072A
WQ-081A	5072A
WQ-081B	5072A
WQ-081C	5072A
WQ-081D	5072A
WQ-083	5072A
WQ-083A	5072A
WQ-083B	5072A
WQ-083C	5072A
WQ-083D	5072A
WQ-085	5072A
WQ-085A	5072A
WQ-085B	5072A
WQ-085C	5072A
WQ-085D	5072A
WQ-088	139A
WQ-088A	139A
WQ-088B	139A
WQ-088C	139A
WQ-088D	139A
WQ-092	139A
WQ-092A	139A
WQ-092B	139A
WQ-092C	139A
WQ-092D	139A
WQ-094	139A
WQ-094A	139A
WQ-094B	139A
WQ-094C	139A
WQ-094D	139A
WQ-098	140A
WQ-098A	140A
WQ-098B	140A
WQ-098C	140A
WQ-098D	140A
WQ-100	140A
WQ-100A	140A
WQ-100B	140A
WQ-100C	140A
WQ-100D	140A
WQ-110	5074A
WQ-110A	5074A
WQ-110B	5074A
WQ-110C	5074A
WQ-110D	5074A
WQ-115	141A
WQ-115A	141A
WQ-115B	141A
WQ-115C	141A
WQ-115D	141A
WQ-120	142A
WQ-120A	142A
WQ-120B	142A
WQ-120C	142A
WQ-120D	142A
WQ-125	143A
WQ-125A	143A
WQ-125B	143A
WQ-125C	143A
WQ-125D	143A
WQ-130	143A
WQ-130A	143A
WQ-130B	143A
WQ-130C	143A
WQ-130D	143A
WQ-140	144A
WQ-140A	144A
WQ-140B	144A
WQ-140C	144A
WQ-140D	144A
WQ-150	145A
WQ-150A	145A
WQ-150B	145A
WQ-150C	145A
WQ-150D	145A
WQ-157	5075A
WQ-157A	5075A
WQ-157B	5075A
WQ-157C	5075A
WQ-157D	5075A
WQ-162	5075A
WQ-162A	5075A
WQ-162B	5075A
WQ-162C	5075A
WQ-162D	5075A
WQ-167	5075A
WQ-167A	5075A
WQ-167B	5075A
WQ-167C	5075A
WQ-167D	5075A
WQ-172	5077A
WQ-172A	5077A
WQ-172B	5077A
WQ-172C	5077A
WQ-172D	5077A
WQ-177	5077A
WQ-177A	5077A
WQ-177B	5077A
WQ-177C	5077A
WQ-177D	5077A
WQ-182	5077A
WQ-182A	5077A
WQ-182B	5077A
WQ-182C	5077A
WQ-182D	5077A
WQ-230	5081A
WQ-230A	5081A
WQ-230B	5081A
WQ-230C	5081A
WQ-230D	5081A
WQ-240	5081A
WQ-240A	5081A
WQ-240B	5081A
WQ-240C	5081A
WQ-240D	5081A
WQ-250	5081A
WQ-250A	5081A
WQ-250B	5081A
WQ-250C	5081A
WQ-250D	5081A
WQ-260	146A
WQ-260A	146A
WQ-260B	146A
WQ-260C	146A
WQ-260D	146A
WQ-270	146A
WQ-270A	146A
WQ-270B	146A
WQ-270C	146A
WQ-270D	146A
WQ-290	5084A
WQ-290A	5084A
WQ-290B	5084A
WQ-290C	5084A
WQ-290D	5084A
WQ-300	5084A
WQ-300A	5084A
WQ-300B	5084A
WQ-300C	5084A
WQ-300D	5084A
WQ-330	147A
WQ-330A	147A
WQ-330B	147A
WQ-330C	147A
WQ-330D	147A
WQ-340	147A
WQ-340A	147A
WQ-340B	147A
WQ-340C	147A
WQ-340D	147A
WR006	116
WR030	166
WR040	166
WR011	166
WR013	116
WR1	156
WR2	156
WR3	5809
WR10	5492
WR30	5850
WR31	5852
WR32	5854
WR33	5858
WR34	5862
WR40	5870
WR41	5872
WR42	5874
WR43	5878
WR44	5882
WR50	5980
WR51	5982
WR52	5986
WR53	5990
WR54	5994
WR60	5980
WR61	5982
WR62	5986
WR63	5990
WR64	5994
WR100	116
WR200	116
WR300	116
WR400	116
WR-006	5800
WR-030	5800
WR-040	5800
WR-050	135A
WR-050A	135A
WR-050B	135A
WR-050C	135A
WR-050D	135A
WR-090	139A
WR-090A	139A
WR-090B	139A
WR-090C	139A
WR-090D	139A
WR-013	116
WR-052	135A
WR-052A	135A
WR-052B	135A
WR-052C	135A
WR-052D	135A
WR-054	136A
WR-054A	136A
WR-054B	136A
WR-054C	136A
WR-054D	136A
WR-056	136A
WR-056A	136A
WR-056B	136A
WR-056C	136A
WR-056D	136A
WR-058	136A
WR-058A	136A
WR-058B	136A
WR-058C	136A
WR-058D	136A
WR-061	137A
WR-061A	137A
WR-061B	137A
WR-061C	137A
WR-061D	137A
WR-063	137A
WR-063A	137A
WR-063B	137A
WR-063C	137A
WR-063D	137A
WR-065	137A
WR-065A	137A
WR-065B	137A
WR-065C	137A
WR-065D	137A
WR-071	138A
WR-071A	138A
WR-071B	138A
WR-071C	138A
WR-071D	138A
WR-073	138A
WR-073A	138A
WR-073B	138A
WR-073C	138A
WR-073D	138A
WR-075	138A
WR-075A	138A
WR-075B	138A
WR-075C	138A
WR-075D	138A
WR-077	138A
WR-077A	138A
WR-077B	138A
WR-077C	138A
WR-077D	138A
WR-079	5072A
WR-079A	5072A
WR-079B	5072A
WR-079C	5072A
WR-079D	5072A
WR-081	5072A
WR-081A	5072A
WR-081B	5072A
WR-081C	5072A
WR-081D	5072A
WR-083	5072A
WR-083A	5072A
WR-083B	5072A
WR-083C	5072A
WR-083D	5072A
WR-085	5072A
WR-085A	5072A
WR-085B	5072A
WR-085C	5072A
WR-085D	5072A
WR-088	139A
WR-088A	139A
WR-088B	139A
WR-088C	139A
WR-088D	139A
WR-092	139A
WR-092A	139A
WR-092B	139A
WR-092C	139A
WR-092D	139A
WR-094	139A
WR-094A	139A
WR-094B	139A
WR-094C	139A
WR-094D	139A
WR-098	140A
WR-098A	140A
WR-098B	140A
WR-098C	140A
WR-098D	140A
WR-100	140A
WR-100A	140A
WR-100B	140A
WR-100C	140A
WR-100D	140A
WR-110	5074A
WR-110A	5074A
WR-110B	5074A
WR-110C	5074A
WR-110D	5074A
WR-115	141A
WR-115A	141A
WR-115B	141A
WR-115C	141A
WR-115D	141A
WR-120	142A
WR-120A	142A
WR-120B	142A
WR-120C	142A
WR-120D	142A
WR-125	143A
WR-125A	143A
WR-125B	143A
WR-125C	143A
WR-125D	143A
WR-130	143A
WR-130A	143A
WR-130B	143A
WR-130C	143A
WR-130D	143A
WR-140	144A
WR-140A	144A
WR-140B	144A
WR-140C	144A
WR-140D	144A
WR-150	145A
WR-150A	145A
WR-150B	145A
WR-150C	145A
WR-150D	145A
WR-157	5075A
WR-157A	5075A
WR-157B	5075A
WR-157C	5075A
WR-157D	5075A
WR-162	5075A
WR-162A	5075A
WR-162B	5075A
WR-162C	5075A
WR-162D	5075A
WR-167	5075A
WR-167A	5075A
WR-167B	5075A
WR-167C	5075A
WR-167D	5075A
WR-172	5077A
WR-172A	5077A
WR-172B	5077A
WR-172C	5077A
WR-172D	5077A
WR-177	5077A
WR-177A	5077A
WR-177B	5077A
WR-177C	5077A
WR-177D	5077A
WR-182	5077A
WR-182A	5077A
WR-182B	5077A
WR-182C	5077A
WR-182D	5077A
WR-200	116
WR-230	5081A
WR-230A	5081A
WR-230B	5081A
WR-230C	5081A
WR-230D	5081A
WR-240	5081A
WR-240A	5081A
WR-240B	5081A
WR-240C	5081A
WR-240D	5081A
WR-250	5081A
WR-250A	5081A
WR-250B	5081A
WR-250C	5081A
WR-250D	5081A
WR-260	146A
WR-260A	146A
WR-260B	146A
WR-260C	146A
WR-260D	146A
WR-270	146A
WR-270A	146A
WR-270B	146A
WR-270C	146A
WR-270D	146A
WS-075A	138A
WRKH91-12	5721
WRKL56-12	5712
WRKL91-12	5722
WRKT56-12	5710
WRKT91-12	5720
WRR1952	123AP
WRR1953	123AP
WRR1954	123AP
WRR1955	5804
WRR1956	5804
WRT1114	102
WS20-1	503
WS20-1B	503
WS20-1S	503
WS100	177
WS100A	177
WS100B	177
WS100C	177
WS200	177
WS200A	177
WS200B	177
WS200C	177
WS300	177
WS300A	177
WS300B	177
WS300C	177
WS6945-2	9945
WS-050	135A
WS-050A	135A
WS-050B	135A
WS-050C	135A
WS-050D	135A
WS-090	139A
WS-090A	139A
WS-090B	139A
WS-090C	139A
WS-090D	139A
WS-052	135A
WS-052A	135A
WS-052B	135A
WS-052C	135A
WS-052D	135A
WS-054	136A
WS-054A	136A
WS-054B	136A
WS-054C	136A
WS-054D	136A
WS-056	136A
WS-056A	136A
WS-056B	136A
WS-056C	136A
WS-056D	136A
WS-058	136A
WS-058A	136A
WS-058B	136A
WS-058C	136A
WS-058D	136A
WS-061	137A
WS-061A	137A
WS-061B	137A
WS-061C	137A
WS-061D	137A
WS-063	137A
WS-063A	137A
WS-063B	137A
WS-063C	137A
WS-063D	137A
WS-065	137A
WS-065A	137A
WS-065B	137A
WS-065C	137A
WS-065D	137A
WS-071	138A
WS-071A	138A
WS-071B	138A
WS-071C	138A
WS-071D	138A
WS-073	138A
WS-073A	138A
WS-073B	138A
WS-073C	138A
WS-073D	138A
WS-075	138A
WS-075A	138A

PART NUMBER	NTE REPLACEMENT
WS-075B	138A
WS-075C	138A
WS-075D	138A
WS-077	138A
WS-077A	138A
WS-077B	138A
WS-077C	138A
WS-077D	138A
WS-079	5072A
WS-079A	5072A
WS-079B	5072A
WS-079C	5072A
WS-079D	5072A
WS-081	5072A
WS-081A	5072A
WS-081B	5072A
WS-081C	5072A
WS-081D	5072A
WS-083	5072A
WS-083A	5072A
WS-083B	5072A
WS-083C	5072A
WS-083D	5072A
WS-085	5072A
WS-085A	5072A
WS-085B	5072A
WS-085C	5072A
WS-085D	5072A
WS-088	139A
WS-088A	139A
WS-088B	139A
WS-088C	139A
WS-088D	139A
WS-092	139A
WS-092A	139A
WS-092B	139A
WS-092C	139A
WS-092D	139A
WS-094	139A
WS-094A	139A
WS-094B	139A
WS-094C	139A
WS-094D	139A
WS-098	140A
WS-098A	140A
WS-098B	140A
WS-098C	140A
WS-098D	140A
WS-100	140A
WS-100A	140A
WS-100B	140A
WS-100C	140A
WS-100D	140A
WS-110	5074A
WS-110A	5074A
WS-110B	5074A
WS-110C	5074A
WS-110D	5074A
WS-115	141A
WS-115A	141A
WS-115B	141A
WS-115C	141A
WS-115D	141A
WS-120	142A
WS-120A	142A
WS-120B	142A
WS-120C	142A
WS-120D	142A
WS-125	143A
WS-125A	143A
WS-125B	143A
WS-125C	143A
WS-125D	143A
WS-130	143A
WS-130A	143A
WS-130B	143A
WS-130C	143A
WS-130D	143A
WS-140	144A
WS-140A	144A
WS-140B	144A
WS-140C	144A
WS-140D	144A
WS-150	145A
WS-150A	145A
WS-150B	145A
WS-150C	145A
WS-150D	145A
WS-157	5075A
WS-157A	5075A
WS-157B	5075A
WS-157C	5075A
WS-157D	5075A
WS-162	5075A
WS-162A	5075A
WS-162B	5075A
WS-162C	5075A
WS-162D	5075A
WS-167	5075A
WS-167A	5075A
WS-167B	5075A
WS-167C	5075A
WS-167D	5075A
WS-172	5077A
WS-172A	5077A
WS-172B	5077A
WS-172C	5077A
WS-172D	5077A
WS-177	5077A
WS-177A	5077A
WS-177B	5077A
WS-177C	5077A
WS-177D	5077A
WS-182	5077A
WS-182A	5077A
WS-182B	5077A
WS-182C	5077A
WS-182D	5077A
WS-230	5081A
WS-230A	5081A
WS-230B	5081A
WS-230C	5081A
WS-230D	5081A
WS-240	5081A
WS-240A	5081A
WS-240B	5081A
WS-240C	5081A
WS-240D	5081A
WS-250	5081A
WS-250A	5081A
WS-250B	5081A
WS-250C	5081A
WS-250D	5081A
WS-260	146A
WS-260A	146A
WS-260B	146A
WS-260C	146A
WS-260D	146A
WS-270	146A
WS-270A	146A
WS-270B	146A
WS-270C	146A
WS-270D	146A
WS-290	5084A
WS-290A	5084A
WS-290B	5084A
WS-290C	5084A
WS-290D	5084A
WS-300	5084A
WS-300A	5084A
WS-300B	5084A
WS-300C	5084A
WS-300D	5084A
WS-330	147A
WS-330A	147A
WS-330B	147A
WS-330C	147A
WS-330D	147A
WS-340	147A
WS-340A	147A
WS-340B	147A
WS-340C	147A
WS-340D	147A
WSD002C	177
WSEP-2203	1090
WT16X7	113A
WT26030	5635
WT-050	135A
WT-050A	135A
WT-050B	135A
WT-050C	135A
WT-050D	135A
WT-090	139A
WT-090A	139A
WT-090B	139A
WT-090C	139A
WT-090D	139A
WT-052	135A
WT-052A	135A
WT-052B	135A
WT-052C	135A
WT-052D	135A
WT-054	136A
WT-054A	136A
WT-054B	136A
WT-054C	136A
WT-054D	136A
WT-056	136A
WT-056A	136A
WT-056B	136A
WT-056C	136A
WT-056D	136A
WT-058	136A
WT-058A	136A
WT-058B	136A
WT-058C	136A
WT-058D	136A
WT-061	137A
WT-061A	137A
WT-061B	137A
WT-061C	137A
WT-061D	137A
WT-063	137A
WT-063A	137A
WT-063B	137A
WT-063C	137A
WT-063D	137A
WT-065	137A
WT-065A	137A
WT-065B	137A
WT-065C	137A
WT-065D	137A
WT-071	138A
WT-071A	138A
WT-071B	138A
WT-071C	138A
WT-071D	138A
WT-073	138A
WT-073A	138A
WT-073B	138A
WT-073C	138A
WT-073D	138A
WT-075	138A
WT-075A	138A
WT-075B	138A
WT-075C	138A
WT-075D	138A
WT-077	138A
WT-077A	138A
WT-077B	138A
WT-077C	138A
WT-077D	138A
WT-079	5072A
WT-079A	5072A
WT-079B	5072A
WT-079C	5072A
WT-079D	5072A
WT-081	5072A
WT-081A	5072A
WT-081B	5072A
WT-081C	5072A
WT-081D	5072A
WT-083	5072A
WT-083A	5072A
WT-083B	5072A
WT-083C	5072A
WT-083D	5072A
WT-085	5072A
WT-085A	5072A
WT-085B	5072A
WT-085C	5072A
WT-085D	5072A
WT-088	139A
WT-088A	139A
WT-088B	139A
WT-088C	139A
WT-088D	139A
WT-092	139A
WT-092A	139A
WT-092B	139A
WT-092C	139A
WT-092D	139A
WT-094	139A
WT-094A	139A
WT-094B	139A
WT-094C	139A
WT-094D	139A
WT-098	140A
WT-098A	140A
WT-098B	140A
WT-098C	140A
WT-098D	140A
WT-10C	143A
WT-100	140A
WT-100A	140A
WT-100B	140A
WT-100C	140A
WT-100D	140A
WT-110	5074A
WT-110A	5074A
WT-110B	5074A
WT-110C	5074A
WT-110D	5074A
WT-115	141A
WT-115A	141A
WT-115B	141A
WT-115C	141A
WT-115D	141A
WT-120	142A
WT-120A	142A
WT-120B	142A
WT-120C	142A
WT-120D	142A
WT-125	143A
WT-125A	143A
WT-125B	143A
WT-125C	143A
WT-125D	143A
WT-130	143A
WT-130A	143A
WT-130B	143A
WT-130C	143A
WT-130D	143A
WT-140	144A
WT-140A	144A
WT-140B	144A
WT-140C	144A
WT-140D	144A
WT-150	145A
WT-150A	145A
WT-150B	145A
WT-150C	145A
WT-150D	145A
WT-157	5075A
WT-157A	5075A
WT-157B	5075A
WT-157C	5075A
WT-157D	5075A
WT-162	5075A
WT-162A	5075A
WT-162B	5075A
WT-162C	5075A
WT-162D	5075A
WT-167	5075A
WT-167A	5075A
WT-167B	5075A
WT-167C	5075A
WT-167D	5075A
WT-172	5077A
WT-172A	5077A
WT-172B	5077A
WT-172C	5077A
WT-172D	5077A
WT-177	5077A
WT-177A	5077A
WT-177B	5077A
WT-177C	5077A
WT-177D	5077A
WT-182	5077A
WT-182A	5077A
WT-182B	5077A
WT-182C	5077A
WT-182D	5077A
WT-230	5081A
WT-230A	5081A
WT-230B	5081A
WT-230C	5081A
WT-230D	5081A
WT-240	5081A
WT-240A	5081A
WT-240B	5081A
WT-240C	5081A
WT-240D	5081A
WT-250	5081A
WT-250A	5081A
WT-250B	5081A
WT-250C	5081A
WT-250D	5081A
WT-260	146A
WT-260A	146A
WT-260B	146A
WT-260C	146A
WT-260D	146A
WT-270	146A
WT-270A	146A
WT-270B	146A
WT-270C	146A
WT-270D	146A
WT-290	5084A
WT-290A	5084A
WT-290B	5084A
WT-290C	5084A
WT-290D	5084A
WT-300	5084A
WT-300A	5084A
WT-300B	5084A
WT-300C	5084A
WT-300D	5084A
WT-330	147A
WT-330A	147A
WT-330B	147A
WT-330C	147A
WT-340	147A
WT-340A	147A
WT-340B	147A
WT-340C	147A
WT-340D	147A
WTV3MC	160
WTV6MC	160
WTV6PWR	121
WTV12MC	160
WTV12PWR	121
WTV15MG	102A
WTV15VMG	102A
WTV20MC	160
WTV20MG	102A
WTV20VH6	102A
WTV20VHG	102A
WTV20VMG	102A
WTV25PWR	121
WTV30LVG	176
WTV30VH6	158
WTV30VHG	102A
WTV30VLG	102A
WTV30VMG	102A
WTV40PWR	121
WTV99PWR	121
WTV129PWR	105
WTV199PWR	121
WTV299PWR	105
WTV-BMC	102A
WTV-L6	101
WTVAT6	102A
WTVAT6A	160
WTVB5	160
WTVB5A	102A
WTVB6	100
WTVB6A	102
WTVBA6	160
WTVBA6A	102A
WTVBE6	160
WTVBE6A	102A
WTVBMC	158
WTVL6	103
WTVSA7	101
WTVSK7	101
WTVSQ7	101
WU065A	137A
WU2N1307	140A
WU-050	135A
WU-050A	135A
WU-050B	135A
WU-050C	135A
WU-050D	135A
WU-090	139A
WU-090A	139A
WU-090B	139A
WU-090C	139A
WU-090D	139A
WU-052	135A
WU-052A	135A
WU-052B	135A
WU-052C	135A
WU-052D	135A
WU-054	136A
WU-054A	136A
WU-054B	136A
WU-054C	136A
WU-054D	136A
WU-056	136A
WU-056A	136A
WU-056B	136A
WU-056C	136A
WU-056D	136A
WU-058	136A
WU-058A	136A
WU-058B	136A
WU-058C	136A
WU-058D	136A
WU-061	137A
WU-061A	137A
WU-061B	137A
WU-061C	137A
WU-061D	137A
WU-063	137A
WU-063A	137A
WU-063B	137A
WU-063C	137A
WU-063D	137A
WU-065	137A
WU-065B	137A
WU-065C	137A
WU-065D	137A
WU-071	138A
WU-071A	138A
WU-071B	138A
WU-071C	138A
WU-071D	138A
WU-073	138A
WU-073A	138A
WU-073B	138A
WU-073C	138A
WU-073D	138A
WU-075	138A
WU-075A	138A
WU-075B	138A
WU-075C	138A
WU-075D	138A
WU-077	138A
WU-077A	138A
WU-077B	138A
WU-077C	138A
WU-077D	138A
WU-079	5072A
WU-079A	5072A
WU-079B	5072A
WU-079C	5072A
WU-079D	5072A
WU-081	5072A
WU-081A	5072A
WU-081B	5072A
WU-081C	5072A
WU-081D	5072A
WU-083	5072A
WU-083A	5072A
WU-083B	5072A
WU-083C	5072A
WU-083D	5072A
WU-085	5072A
WU-085A	5072A
WU-085B	5072A
WU-085C	5072A
WU-085D	5072A
WU-088	139A
WU-088A	139A
WU-088B	139A
WU-088C	139A
WU-088D	139A
WU-092	139A
WU-092A	139A
WU-092B	139A
WU-092C	139A
WU-092D	139A
WU-094	139A
WU-094A	139A
WU-094B	139A
WU-094C	139A
WU-094D	139A
WU-098	140A
WU-098A	140A
WU-098B	140A
WU-098C	140A
WU-098D	140A
WU-20B	142A
WU-100	140A
WU-100A	140A
WU-100B	140A
WU-100C	140A
WU-100D	140A
WU-110	5074A
WU-110A	5074A
WU-110B	5074A
WU-110C	5074A
WU-110D	5074A
WU-115	141A
WU-115A	141A
WU-115B	141A
WU-115C	141A
WU-115D	141A
WU-120	142A
WU-120A	142A
WU-120C	142A
WU-120D	142A
WU-125	142A
WU-125A	142A
WU-125B	142A
WU-125C	142A
WU-125D	142A
WU-130	143A
WU-130A	143A
WU-130B	143A
WU-130C	143A
WU-130D	143A
WU-140	144A
WU-140A	144A
WU-140B	144A
WU-140C	144A
WU-140D	144A
WU-150	145A
WU-150A	145A
WU-150B	145A
WU-150C	145A
WU-150D	145A
WU-157	5075A
WU-157A	5075A
WU-157B	5075A
WU-157C	5075A
WU-157D	5075A
WU-162	5075A
WU-162A	5075A
WU-162B	5075A
WU-162C	5075A
WU-162D	5075A
WU-167	5075A
WU-167A	5075A
WU-167B	5075A
WU-167C	5075A
WU-167D	5075A
WU-172	5077A
WU-172A	5077A
WU-172B	5077A
WU-172C	5077A
WU-172D	5077A
WU-177	5077A
WU-177A	5077A
WU-177B	5077A
WU-177C	5077A
WU-177D	5077A
WU-182	5077A
WU-182A	5077A
WU-182B	5077A
WU-182C	5077A
WU-182D	5077A
WU-230	5081A
WU-230A	5081A
WU-230B	5081A
WU-230C	5081A
WU-230D	5081A
WU-240	5081A
WU-240A	5081A
WU-240B	5081A
WU-240C	5081A
WU-240D	5081A
WU-250	5081A
WU-250A	5081A
WU-250B	5081A
WU-250C	5081A
WU-250D	5081A
WU-260	146A
WU-260A	146A
WU-260B	146A
WU-260C	146A
WU-260D	146A
WU-270	146A
WU-270A	146A
WU-270B	146A
WU-270C	146A
WU-270D	146A
WU-290	5084A
WU-290A	5084A
WU-290B	5084A
WU-290C	5084A
WU-290D	5084A
WU-300	5084A
WU-300A	5084A
WU-300B	5084A
WU-300C	5084A
WU-300D	5084A
WU-330	147A
WU-330A	147A
WU-330B	147A
WU-330C	147A
WU-330D	147A
WU-340	147A
WU-340A	147A
WU-340B	147A
WU-340C	147A
WU-340D	147A
WV-050	135A
WV-050A	135A
WV-050B	135A
WV-050C	135A
WV-050D	135A
WV-090	139A
WV-090A	139A
WV-090B	139A
WV-090C	139A
WV-090D	139A
WV-052	135A
WV-052A	135A
WV-052B	135A
WV-052C	135A
WV-052D	135A
WV-054	136A
WV-054A	136A
WV-054B	136A
WV-054C	136A
WV-054D	136A
WV-056	136A
WV-056A	136A
WV-056B	136A
WV-056C	136A
WV-056D	136A
WV-058	136A
WV-058A	136A
WV-058B	136A
WV-058C	136A
WV-058D	136A
WV-061	137A
WV-061A	137A
WV-061B	137A
WV-061C	137A
WV-061D	137A
WV-063	137A
WV-063A	137A
WV-063B	137A
WV-063C	137A
WV-063D	137A
WV-065	137A
WV-065A	137A
WV-065B	137A
WV-065C	137A
WV-065D	137A
WV-071	138A
WV-071A	138A
WV-071B	138A
WV-071C	138A
WV-071D	138A
WV-073	138A
WV-073A	138A
WV-073B	138A
WV-073C	138A
WV-073D	138A
WV-075	138A
WV-075A	138A
WV-075B	138A
WV-075C	138A
WV-075D	138A
WV-077	138A
WV-077A	138A
WV-077B	138A
WV-077C	138A
WV-077D	138A
WV-079	5072A
WV-079A	5072A
WV-079B	5072A
WV-079C	5072A
WV-079D	5072A
WV-081	5072A
WV-081A	5072A
WV-081B	5072A
WV-081C	5072A
WV-081D	5072A
WV-083	5072A
WV-083A	5072A
WV-083B	5072A
WV-083C	5072A
WV-083D	5072A
WV-085	5072A
WV-085A	5072A
WV-085B	5072A
WV-085C	5072A
WV-085D	5072A
WV-088	139A
WV-088A	139A
WV-088B	139A
WV-088C	139A
WV-088D	139A
WV-092	139A
WV-092A	139A
WV-092B	139A
WV-092C	139A
WV-092D	139A
WV-094	139A
WV-094A	139A
WV-094B	139A
WV-094C	139A
WV-094D	139A
WV-098	140A
WV-098A	140A
WV-098B	140A
WV-098C	140A
WV-098D	140A
WV-100	140A
WV-100A	140A
WV-100B	140A
WV-100C	140A
WV-100D	140A
WV-110	5074A
WV-110A	5074A
WV-110B	5074A
WV-110C	5074A
WV-110D	5074A
WV-115	141A
WV-115A	141A
WV-115B	141A
WV-115C	141A
WV-115D	141A
WV-120	142A
WV-120A	142A
WV-120B	142A
WV-120C	142A
WV-120D	142A
WV-125	143A
WV-125A	143A
WV-125B	143A
WV-125C	143A
WV-125D	143A
WV-130	143A
WV-130A	143A
WV-130B	143A
WV-130C	143A
WV-130D	143A
WV-140	144A
WV-140A	144A
WV-140B	144A
WV-140C	144A
WV-140D	144A
WV-150	146A
WV-150A	146A
WV-150B	146A
WV-150C	146A
WV-150D	146A
WV-157	5075A
WV-157A	5075A
WV-157B	5075A
WV-157C	5075A
WV-157D	5075A
WV-162	5075A

PART NUMBER	NTE REPLACEMENT
WV-162A	5075A
WV-162B	5075A
WV-162C	5075A
WV-162D	5075A
WV-167	5075A
WV-167A	5075A
WV-167B	5075A
WV-167C	5075A
WV-167D	5075A
WV-170	146A
WV-172	5077A
WV-172A	5077A
WV-172B	5077A
WV-172C	5077A
WV-172D	5077A
WV-177	5077A
WV-177A	5077A
WV-177B	5077A
WV-177C	5077A
WV-177D	5077A
WV-182	5077A
WV-182A	5077A
WV-182B	5077A
WV-182C	5077A
WV-182D	5077A
WV-230	5081A
WV-230A	5081A
WV-230B	5081A
WV-230C	5081A
WV-230D	5081A
WV-240	5081A
WV-240A	5081A
WV-240B	5081A
WV-240C	5081A
WV-240D	5081A
WV-250	5081A
WV-250A	5081A
WV-250B	5081A
WV-250C	5081A
WV-250D	5081A
WV-260	146A
WV-260A	146A
WV-260B	146A
WV-260C	146A
WV-260D	146A
WV-270	146A
WV-270A	146A
WV-270B	146A
WV-270C	146A
WV-270D	146A
WV-290	5084A
WV-290A	5084A
WV-290B	5084A
WV-290C	5084A
WV-290D	5084A
WV-300	5084A
WV-300A	5084A
WV-300B	5084A
WV-300C	5084A
WV-300D	5084A
WV-330	147A
WV-330A	147A
WV-330B	147A
WV-330C	147A
WV-330D	147A
WV-340	147A
WV-340A	147A
WV-340B	147A
WV-340C	147A
WV-340D	147A
WW-050	135A
WW-050A	135A
WW-050B	135A
WW-050C	135A
WW-050D	135A
WW-090	139A
WW-090A	139A
WW-090B	139A
WW-090C	139A
WW-090D	139A
WW-052	135A
WW-052A	135A
WW-052B	135A
WW-052C	135A
WW-052D	135A
WW-054	136A
WW-054A	136A
WW-054B	136A
WW-054C	136A
WW-054D	136A
WW-056	136A
WW-056A	136A
WW-056B	136A
WW-056C	136A
WW-056D	136A
WW-058	136A
WW-058A	136A
WW-058B	136A
WW-058C	136A
WW-058D	136A
WW-061	137A
WW-061A	137A
WW-061B	137A
WW-061C	137A
WW-061D	137A
WW-063	137A
WW-063A	137A
WW-063B	137A
WW-063C	137A
WW-065	137A
WW-065A	137A
WW-065B	137A
WW-065C	137A
WW-065D	137A
WW-071	138A
WW-071A	138A
WW-071B	138A
WW-071C	138A
WW-071D	138A
WW-073	138A
WW-073A	138A
WW-073B	138A
WW-073C	138A
WW-073D	138A
WW-075	138A
WW-075A	138A
WW-075B	138A
WW-075C	138A
WW-075D	138A
WW-077	138A
WW-077A	138A
WW-077B	138A
WW-077C	138A
WW-077D	138A
WW-079	5072A
WW-079A	5072A
WW-079B	5072A
WW-079C	5072A
WW-079D	5072A
WW-081	5072A
WW-081A	5072A
WW-081B	5072A
WW-081C	5072A
WW-081D	5072A
WW-083	5072A
WW-083A	5072A
WW-083B	5072A
WW-083C	5072A
WW-083D	5072A
WW-085	5072A
WW-085A	5072A
WW-085B	5072A
WW-085C	5072A
WW-085D	5072A
WW-088	139A
WW-088A	139A
WW-088B	139A
WW-088C	139A
WW-088D	139A
WW-092	139A
WW-092A	139A
WW-092B	139A
WW-092C	139A
WW-092D	139A
WW-094	139A
WW-094A	139A
WW-094B	139A
WW-094C	139A
WW-094D	139A
WW-098	140A
WW-098A	140A
WW-098B	140A
WW-098C	140A
WW-098D	140A
WW-100	140A
WW-100A	140A
WW-100B	140A
WW-100C	140A
WW-100D	140A
WW-110	5074A
WW-110A	5074A
WW-110B	5074A
WW-110C	5074A
WW-110D	5074A
WW-115	142A
WW-115A	142A
WW-115B	142A
WW-115C	142A
WW-115D	142A
WW-120	142A
WW-120A	142A
WW-120B	142A
WW-120C	142A
WW-120D	142A
WW-125	144A
WW-125A	144A
WW-125B	144A
WW-125C	144A
WW-125D	144A
WW-130	144A
WW-130A	144A
WW-130B	144A
WW-130C	144A
WW-130D	144A
WW-140	144A
WW-140A	144A
WW-140B	144A
WW-140C	144A
WW-140D	144A
WW-150	145A
WW-150A	145A
WW-150B	145A
WW-150C	145A
WW-150D	145A
WW-157	5075A
WW-157A	5075A
WW-157B	5075A
WW-157C	5075A
WW-157D	5075A
WW-162	5075A
WW-162A	5075A
WW-162B	5075A
WW-162C	5075A
WW-162D	5075A
WW-167	5075A
WW-167A	5075A
WW-167B	5075A
WW-167C	5075A
WW-167D	5075A
WW-172	5077A
WW-172A	5077A
WW-172B	5077A
WW-172C	5077A
WW-172D	5077A
WW-177	5077A
WW-177A	5077A
WW-177B	5077A
WW-177C	5077A
WW-177D	5077A
WW-182	5077A
WW-182A	5077A
WW-182B	5077A
WW-182C	5077A
WW-182D	5077A
WW-230	5081A
WW-230A	5081A
WW-230B	5081A
WW-230C	5081A
WW-230D	5081A
WW-240	5081A
WW-240A	5081A
WW-240B	5081A
WW-240C	5081A
WW-240D	5081A
WW-250	5081A
WW-250A	5081A
WW-250B	5081A
WW-250C	5081A
WW-250D	5081A
WW-260	146A
WW-260A	146A
WW-260B	146A
WW-260C	146A
WW-260D	146A
WW-270	146A
WW-270A	146A
WW-270B	146A
WW-270C	146A
WW-270D	146A
WW-290	5084A
WW-290A	5084A
WW-290B	5084A
WW-290C	5084A
WW-290D	5084A
WW-300	5084A
WW-300A	5084A
WW-300B	5084A
WW-300C	5084A
WW-300D	5084A
WW-330	147A
WW-330A	147A
WW-330B	147A
WW-330C	147A
WW-330D	147A
WW-340	147A
WW-340A	147A
WW-340B	147A
WW-340C	147A
WW-340D	147A
WX6	109
WX-050	135A
WX-050A	135A
WX-050B	135A
WX-050C	135A
WX-050D	135A
WX-090	139A
WX-090A	139A
WX-090B	139A
WX-090C	139A
WX-090D	139A
WX-052	135A
WX-052A	135A
WX-052B	135A
WX-052C	135A
WX-052D	135A
WX-054	136A
WX-054A	136A
WX-054B	136A
WX-054C	136A
WX-054D	136A
WX-056	136A
WX-056A	136A
WX-056B	136A
WX-056C	136A
WX-056D	136A
WX-058	136A
WX-058A	136A
WX-058B	136A
WX-058C	136A
WX-058D	136A
WX-061	137A
WX-061A	137A
WX-061B	137A
WX-061C	137A
WX-061D	137A
WX-063	137A
WX-063A	137A
WX-063B	137A
WX-063C	137A
WX-063D	137A
WX-065	137A
WX-065A	137A
WX-065B	137A
WX-065C	137A
WX-065D	137A
WX-071	138A
WX-071A	138A
WX-071B	138A
WX-071C	138A
WX-071D	138A
WX-073	138A
WX-073A	138A
WX-073B	138A
WX-073C	138A
WX-073D	138A
WX-075	138A
WX-075A	138A
WX-075B	138A
WX-075C	138A
WX-075D	138A
WX-077	138A
WX-077A	138A
WX-077B	138A
WX-077C	138A
WX-077D	138A
WX-079	5072A
WX-079A	5072A
WX-079B	5072A
WX-079C	5072A
WX-079D	5072A
WX-081	5072A
WX-081A	5072A
WX-081B	5072A
WX-081C	5072A
WX-081D	5072A
WX-083	5072A
WX-083A	5072A
WX-083B	5072A
WX-083C	5072A
WX-083D	5072A
WX-085	5072A
WX-085A	5072A
WX-085B	5072A
WX-085C	5072A
WX-085D	5072A
WX-088	139A
WX-088A	139A
WX-088B	139A
WX-088C	139A
WX-088D	139A
WX-092	139A
WX-092A	139A
WX-092B	139A
WX-092C	139A
WX-092D	139A
WX-094	139A
WX-094A	139A
WX-094B	139A
WX-094C	139A
WX-094D	139A
WX-098	140A
WX-098A	140A
WX-098B	140A
WX-098C	140A
WX-098D	140A
WX-100	140A
WX-100A	140A
WX-100B	140A
WX-100C	140A
WX-100D	140A
WX-110	141A
WX-110A	141A
WX-110B	141A
WX-110C	141A
WX-110D	141A
WX-115	141A
WX-115A	141A
WX-115B	141A
WX-115C	141A
WX-115D	141A
WX-120	142A
WX-120A	142A
WX-120B	142A
WX-120C	142A
WX-120D	142A
WX-125	143A
WX-125A	143A
WX-125B	143A
WX-125C	143A
WX-125D	143A
WX-130	143A
WX-130A	143A
WX-130B	143A
WX-130C	143A
WX-130D	143A
WX-140	144A
WX-140A	144A
WX-140B	144A
WX-140C	144A
WX-140D	144A
WX-150	145A
WX-150A	145A
WX-150B	145A
WX-150C	145A
WX-150D	145A
WX-157	5075A
WX-157A	5075A
WX-157B	5075A
WX-157C	5075A
WX-157D	5075A
WX-162	5075A
WX-162A	5075A
WX-162B	5075A
WX-162C	5075A
WX-162D	5075A
WX-167	5075A
WX-167A	5075A
WX-167B	5075A
WX-167C	5075A
WX-167D	5075A
WX-172	5077A
WX-172A	5077A
WX-172B	5077A
WX-172C	5077A
WX-172D	5077A
WX-177	5077A
WX-177A	5077A
WX-177B	5077A
WX-177C	5077A
WX-177D	5077A
WX-182	5077A
WX-182A	5077A
WX-182C	5077A
WX-182D	5077A
WX-230	5081A
WX-230A	5081A
WX-230B	5081A
WX-230C	5081A
WX-230D	5081A
WX-240	5081A
WX-240A	5081A
WX-240B	5081A
WX-240C	5081A
WX-240D	5081A
WX-250	5081A
WX-250A	5081A
WX-250B	5081A
WX-250C	5081A
WX-250D	5081A
WX-260	146A
WX-260A	146A
WX-260B	146A
WX-260C	146A
WX-260D	146A
WX-270	146A
WX-270A	146A
WX-270B	146A
WX-270C	146A
WX-270D	146A
WX-290	5084A
WX-290A	5084A
WX-290B	5084A
WX-290C	5084A
WX-290D	5084A
WX-300	5084A
WX-300A	5084A
WX-300B	5084A
WX-300C	5084A
WX-300D	5084A
WX-330	147A
WX-330A	147A
WX-330B	147A
WX-330C	147A
WX-330D	147A
WX-340	147A
WX-340A	147A
WX-340B	147A
WX-340C	147A
WX-340D	147A
WY-050	135A
WY-050A	135A
WY-050B	135A
WY-050C	135A
WY-050D	135A
WY-090	139A
WY-090A	139A
WY-090B	139A
WY-090C	139A
WY-090D	139A
WY-052	135A
WY-052A	135A
WY-052B	135A
WY-052C	135A
WY-052D	135A
WY-054	136A
WY-054A	136A
WY-054B	136A
WY-054C	136A
WY-054D	136A
WY-056	136A
WY-056A	136A
WY-056B	136A
WY-056C	136A
WY-056D	136A
WY-058	136A
WY-058A	136A
WY-058B	136A
WY-058C	136A
WY-058D	136A
WY-061	137A
WY-061A	137A
WY-061B	137A
WY-061C	137A
WY-061D	137A
WY-063	137A
WY-063A	137A
WY-063B	137A
WY-063C	137A
WY-063D	137A
WY-065	137A
WY-065A	137A
WY-065B	137A
WY-065C	137A
WY-065D	137A
WY-071	138A
WY-071A	138A
WY-071B	138A
WY-071C	138A
WY-071D	138A
WY-073	138A
WY-073A	138A
WY-073B	138A
WY-073C	138A
WY-073D	138A
WY-075	138A
WY-075A	138A
WY-075B	138A
WY-075C	138A
WY-075D	138A
WY-077	138A
WY-077A	138A
WY-077B	138A
WY-077C	138A
WY-077D	138A
WY-079	5072A
WY-079A	5072A
WY-079B	5072A
WY-079C	5072A
WY-079D	5072A
WY-081	5072A
WY-081A	5072A
WY-081B	5072A
WY-081C	5072A
WY-081D	5072A
WY-083	5072A
WY-083A	5072A
WY-083B	5072A
WY-083C	5072A
WY-083D	5072A
WY-085	5072A
WY-085A	5072A
WY-085B	5072A
WY-085C	5072A
WY-085D	5072A
WY-088	139A
WY-088A	139A
WY-088B	139A
WY-088C	139A
WY-088D	139A
WY-092	139A
WY-092A	139A
WY-092B	139A
WY-092C	139A
WY-092D	139A
WY-094	139A
WY-094A	139A
WY-094B	139A
WY-094C	139A
WY-094D	139A
WY-098	140A
WY-098A	140A
WY-098B	140A
WY-098C	140A
WY-098D	140A
WY-100	140A
WY-100A	140A
WY-100B	140A
WY-100C	140A
WY-100D	140A
WY-110	5074A
WY-110A	5074A
WY-110B	5074A
WY-110C	5074A
WY-110D	5074A
WY-115	141A
WY-115A	141A
WY-115B	141A
WY-115C	141A
WY-115D	141A
WY-120	142A
WY-120A	142A
WY-120B	142A
WY-120C	142A
WY-120D	142A
WY-125	143A
WY-125A	143A
WY-125B	143A
WY-125C	143A
WY-125D	143A
WY-130	143A
WY-130A	143A
WY-130B	143A
WY-130C	143A
WY-130D	143A
WY-140	144A
WY-140A	144A
WY-140B	144A
WY-140C	144A
WY-140D	144A
WY-150	145A
WY-150A	145A
WY-150B	145A
WY-150C	145A
WY-150D	145A
WY-157	5071A
WY-157A	5071A
WY-157B	5075A
WY-157C	5075A
WY-157D	5075A
WY-162	5075A
WY-162A	5075A
WY-162B	5075A
WY-162C	5075A
WY-162D	5075A
WY-167	5075A
WY-167A	5075A
WY-167B	5075A
WY-167C	5075A
WY-167D	5075A
WY-172	5077A
WY-172A	5077A
WY-172B	5077A
WY-172C	5077A
WY-172D	5077A
WY-177	5077A
WY-177A	5077A
WY-177B	5077A
WY-177C	5077A
WY-177D	5077A
WY-182	5077A
WY-182A	5077A
WY-182B	5077A
WY-182C	5077A
WY-182D	5077A
WY-230	5081A
WY-230A	5081A
WY-230B	5081A
WY-230C	5081A
WY-230D	5081A
WY-240	5081A
WY-240A	5081A
WY-240B	5081A
WY-240C	5081A
WY-240D	5081A
WY-250	5081A
WY-250A	5081A
WY-250B	5081A
WY-250C	5081A
WY-250D	5081A
WY-260	146A
WY-260A	146A
WY-260B	146A
WY-260C	146A
WY-270	146A
WY-270A	146A
WY-270B	146A
WY-270C	146A
WY-270D	146A
WY-290	5084A
WY-290A	5084A
WY-290B	5084A
WY-290C	5084A
WY-290D	5084A
WY-300	5084A
WY-300A	5084A
WY-300B	5084A
WY-300C	5084A
WY-300D	5084A
WY-330	147A
WY-330A	147A
WY-330B	147A
WY-330C	147A
WY-330D	147A
WY-340	147A
WY-340A	147A
WY-340B	147A
WY-340C	147A
WY-340D	147A
WZ050	5010A
WZ060	136A
WZ090	5018A
WZ090A	140A
WZ036	5006A
WZ052	136A
WZ056	5011A
WZ061	5013A
WZ065	137A
WZ069	5071A
WZ071	138A
WZ075	5015A
WZ075A	138A
WZ081	5072A
WZ085	5073A
WZ092	139A
WZ094	5018A
WZ096	140A
WZ3.6	134A
WZ5	135A
WZ5.6	136A
WZ6.2	137A
WZ7.5	138A
WZ9.1	139A
WZ10	140A
WZ11.5	141A
WZ12	142A
WZ12.8	143A
WZ13B	143A
WZ14	144A
WZ15	145A
WZ27	146A
WZ33	147A
WZ55	148A
WZ62	149A
WZ82	150A
WZ100	5019A
WZ110	151A
WZ120	5021A
WZ125	143A
WZ130	143A
WZ140	145A
WZ150	145A
WZ177	5078A
WZ192	5078A
WZ220	5030A
WZ240	5081A
WZ250	5032A
WZ270	5033A
WZ280	5034A
WZ300	5035A
WZ330	5036A
WZ350	5037A
WZ360	5037A
WZ522	135A
WZ523	136A
WZ533	140A
WZ535	142A
WZ537	144A
WZ538	145A
WZ542	5027A
WZ544	5029A
WZ905	135A
WZ916	141A
WZ917	142A
WZ919	144A
WZ920	145A
WZ061	137A
WZ-050	5010A
WZ-050A	135A
WZ-090	5018A

PART NUMBER	NTE REPLACEMENT
WZ-07S	5015A
WZ-047	5009A
WZ-049	5069A
WZ-052	5011A
WZ-052A	135A
WZ-054	5011A
WZ-054A	136A
WZ-056	5011A
WZ-056A	136A
WZ-058	136A
WZ-058A	136A
WZ-061	5013A
WZ-061A	137A
WZ-063	5013A
WZ-063A	137A
WZ-065	5014A
WZ-065A	137A
WZ-067	5014A
WZ-069	5014A
WZ-071	138A
WZ-071A	138A
WZ-073	5015A
WZ-073A	138A
WZ-075	5015A
WZ-077	5015A
WZ-077A	138A
WZ-079	5016A
WZ-079A	5072A
WZ-081	5072A
WZ-081A	5072A
WZ-083	5016A
WZ-083A	5072A
WZ-085	5017A
WZ-085A	5072A
WZ-088	5017A
WZ-088A	140A
WZ-092	5018A
WZ-092A	140A
WZ-094	5018A
WZ-094A	140A
WZ-096	5019A
WZ-098	5019A
WZ-098A	140A
WZ-90	139A
WZ-100	5019A
WZ-100A	140A
WZ-105	5020A
WZ-110	5020A
WZ-110A	5074A
WZ-115	141A
WZ-115A	141A
WZ-120	5021A
WZ-125	5022A
WZ-130	5022A
WZ-135	5023A
WZ-140	5023A
WZ-145	5024A
WZ-150	145A
WZ-157	5025A
WZ-162	5025A
WZ-167	5026A
WZ-172	5026A
WZ-177	5077A
WZ-182	5027A
WZ-187	5028A
WZ-192	5028A
WZ-197	5029A
WZ-210	5080A
WZ-220	5030A
WZ-230	5031A
WZ-240	5081A
WZ-250	5032A
WZ-260	5033A
WZ-270	5033A
WZ-280	5034A
WZ-290	5035A
WZ-300	5035A
WZ-310	5035A
WZ-320	5036A
WZ-330	5036A
WZ-340	5036A
WZ-350	5037A
WZ-538	145A
WZ-920	145A
WZ-07S	5015A
X0600CE	15035
X004CE	712
X0017TA	712
X0017TAZZ	712
X0043CE	712
X0054CE	1140
X0065CE	1550
X0069CE	4001B
X0092CE	1413
X0093CE	1532
X0094CE	1496
X0260	5096A
X0260C	1658
X0301	130
X0302	192A
X0303	263
X0304	172A
X0305	287
X0306	272
X0307	291
X0308	243
X0309	159
X0320	123A
X0360	6502
X0401	4081B
X0402	7404
X0402BE	5455
X0402DE	5457
X0402ME	5458

PART NUMBER	NTE REPLACEMENT
X0403	7405
X0403BE	5455
X0403DE	5457
X0403ME	5458
X0404	7408
X0406	7417
X0407	7432
X0408	7448
X0409	74154
X0410	74175
X0420	7400
X0507	435P18
X0508	423
X092	139A
X0137	1751
X0137CE	1751
X0137CEZZ	1751
X0212CE	1671
X0212CEZZ	1671
X0213CE	1616
X0225C	1377
X0238CE	1676
X0251	5006A
X0252CE	1413
X0253	116
X0254	116
X0255	136A
X0256	5072A
X0257	142A
X0258	5077A
X0259	5085A
X0261	519
X0262	143A
X0263	5801
X0275CE	1572
X0275CE(M0D25KT15)	1572
X0276CE	1570
X0311	247
X0313	159
X0314	287
X0315	247
X0321	159
X0322	270
X0356	65101
X0384	7407
X0393	941M
X0397	7414
X0411	74LS05
X0412	74H21
X0413	4049
X0414	4528B
X0417	74121
X0419	74LS139
X0421	7402
X0422	923D
X0423	7474
X0424	74C04
X0425	7490
X0426	7442
X0428	74LS02
X0432	74LS30
X0434	74LS74A
X0437	74LS138
X0452	967
X0453	923
X0459	309K
X0473	966
X0514	416
X0631	955M
X0632	740A
X0641	291
X1-548	130
X1-549	175
X1C1644	102A
X5M6	116
X10G1829	123AP
X16	109
X16A545-7	123AP
X16A1938	123AP
X16E3860	123AP
X16E3890	192
X16E3960	123AP
X16N1485	123AP
X18	109
X29A829	159
X32A1389	159
X32C4211	123AP
X32C4293	160
X32C4296	123AP
X32C5099	128
X32C5111	128
X32C5198	123AP
X32C6105	123AP
X32D5422	123AP
X32M5026	123AP
X32P5660	108
X34E1226	159
X34E2111	123AP
X37C	615P
X40N121	171
X42	160
X43C248	189
X44C358	152
X44H454	377
X45C359	153
X45C-H06	102A
X72A42416	177
X78	100
X92CE(IC)	1413
X110	8115
X126	8125
X130	8125
X137	105
X145	8149

PART NUMBER	NTE REPLACEMENT
X165	8167
X194-3005829A	130
X300-1300A	128
X713	184
X735-40C	196
X735-41	123AP
X1000	213
X1005	121
X1190CE	7010
X6584-C	123AP
X6661A	726
X19001-A	123AP
X19001-B	128
X19001-C	128
X19001-D	199
X253223	124
X330302	142A
X925940-501B	177
X925940-5018	177
X1022220-1	177
X7338934	175
X7338935	191
X300071592	374
X300101500	290A
X300101502	290A
X300101509	290A
X300102009	25
X300115080	290A
X300117500	290A
X300117593	290A
X301076530	262
X301077251	374
X301079400	254
X302056430	294
X302094530	85
X302116292	373
X302138400	293
X302181502	85
X302181509	85
X302181589	85
X302251600	54
X302278500	85
X302278530	85
X302278593	85
X302278594	85
X303056009	261
X303088000	152
X303088080	152
X303121800	2334
X303139200	2334
X320001480	177
X320010070	519
X320010079	519
X320010080	519
X320010190	506
X320010240	116
X320010380	552
X320010390	519
X320010430	506
X320010450	552
X320010452	519
X320010460	519
X320010512	116
X320010939	519
X320011201	519
X330000059	5009A
X330000230	5032A
X330000320	5000A
X330000342	5019T1
X330000422	5022A
X330000442	5030A
X330000492	5029A
X330000522	5005A
X330000550	5020A
X330000560	139A
X330000570	5037A
X330000582	5010A
X330020020	5137A
X330030288	5040A
X330160109	5009A
X330180069	5006A
X340040030	5304
X340300010	5314
X340330017	5309
X340400030	5304
X340400040	166
X340400060	5312
X350030030	56006
X400040161	2128
X400104162	2117
X400141640	2164
X420100060	7406
X420100070	7407
X420100160	7416
X420100170	7417
X420300000	74LS00
X420300020	74LS02
X420300040	74LS04
X420300050	74LS05
X420300320	74LS32
X420300740	74LS74A
X420300750	74LS75
X420300860	74LS86
X420301390	74LS139
X420301450	74LS145
X420301560	74LS156
X420301640	74LS164
X420301750	74LS175
X420302210	74LS221
X420302450	74LS245
X420303670	74LS367
X420303730	74LS373
X420305410	74LS541
X420500740	74LS74A

PART NUMBER	NTE REPLACEMENT
X440029020	987
X440029040	928M
X440032060	7406
X440057330	927D
X440058120	966
X440063050	960
X440069050	961
X440070490	4049
X440072920	943M
X440078051	977
X440079120	967
X440095550	955M
X440150640	1680
X440160660	4066B
X440193050	1930
X440223110	922M
X440672200	1885
X440751880	75188
X440751890	75189
X440759820	1736
X460409300	4093B
X460458400	4016B
X-78	102A
X-19002	941D
X-19031-A	519
X-23305-3	5804
X-23305-4	5804
X-439623	912
X-2408784	9951
XA101	160
XA102	160
XA103	160
XA104	160
XA111	160
XA112	160
XA121	116
XA122	102A
XA123	160
XA124	160
XA126	160
XA131	160
XA141	160
XA142	160
XA143	160
XA151	158
XA152	158
XA161	160
XA492D	129
XA494	159
XA495	159
XA495(C)	159
XA495AC	159
XA495C	159
XA495D	129
XA701	101
XA702	101
XA703	101
XA1018	128
XA1199	197
XA-495	159
XA-495C	129
XA-1071	123AP
XA-1072	159
XA-1078	130
XA-1093	124
XA-1095	128
XA-1139	123AP
XA-1140	159
XA-1160	152
XA-1161	130
XA-1164	234
XAA104	7402
XAA105	7430
XAA106	7440
XAA107	7473
XAA108	7476
XAA109	7490
XAN351	3054
XAN354	3059
XAN361	3052
XAN362	3065
XAN381	3055
XAN384	3060
XAN3051	3054
XAN3054	3059
XAN3061	3052
XAN3062	3065
XAN3064	3056
XAN3081	3055
XAN3084	3060
XAN6032	3065
XAN-351	3054
XAN-361	3052
XAN-362	3065
XAN-364	3056
XAN-381	3055
XAN-3054	3059
XAN-3062	3065
XAN-3064	3056
XAN-3081	3055
XAN-3084	3060
XB1	102
XB1A	102A
XB2	102
XB2.XB4(NPN)	103A
XB2.XB4(NPU)	103A
XB2.XB4(PNP)	102A
XB2/XB4(NPN)	103A
XB2/XB4(PNP)	102A
XB2A	102A
XB3	102
XB3A	102A
XB3B	102
XB3BN	102A

PART NUMBER	NTE REPLACEMENT
XB3C	102
XB3C-1	102A
XB4	103
XB4-1	102A
XB5	104
XB7	104
XB8	160
XB9	160
XB10	160
XB12	128
XB13	102A
XB14	121
XB102	102A
XB103	102A
XB104	102A
XB112	102A
XB113	102A
XB114	102A
XB152	145A
XB401	186
XB404	152
XB408	152
XB413	320
XB476	152
XB-5	121
XB-7	121
XC70	5071A
XC101	102A
XC121	102A
XC131	102A
XC141	121
XC142	121
XC155	104
XC156	104
XC171	102A
XC209	3007
XC209A	3009
XC209Y	3011
XC371	107
XC372	123AP
XC373	123AP
XC374	123AP
XC556	3025
XC556-2	3025
XC723	130
XC1312	799
XC1312A	799
XC1312P	799
XC5053	3020
XC5053A	3023
XC5053G	3024
XC5053R	3020
XC5053Y	3021
XC-209G	3010
XC-209Y	3011
XC-556	3025
XC-556-2	3025
XC-1312A	799
XC-5053	3020
XC-5053A	3023
XC-5053G	3024
XC-5053Y	3021
XD2A	110MP
XD-258-42	5635
XD-2581-42	5635
XEJ040017	123AP
XF-148217	102A
XG1	160
XG2	160
XG3	160
XG5	160
XG8	102A
XG10	160
XG11	160
XG12	160
XG24	160
XG28	103A
XG29	103A
XG30	123AP
XG32	158
XG33	103A
XI-548	130
XI-549	175
XJ13	102
XJ13-1	102A
XJ71	160
XJ72	160
XJ73	160
XL56	3011
XL-56	3011
XN12A	104
XN12B	104
XN12C	104
XN12E	104
XN12F	104
XN-400-318-P1	123AP
XN-400-319-P2	159
XNC101	103
XO137	1751
XP-2581-82	5635
XP-2581-82	5635
XPS30800	124
XQ-1N60	109
XQ-1S1555	177
XQ-1S2339	610
XQ-1SS16	112
XQ-2N5062	5402
XQ-2N6558	171
XQ-2SB568	398
XQ-2SC383	85
XQ-2SC605	313
XQ-2SC606	313
XQ-2SC684	107
XQ-2SC1106	94

PART NUMBER	NTE REPLACEMENT
XQ-2SC1514	376
XQ-2SD478	375
XQ-601-36	283
XQ-ERB24-04D	552
XQ-ERB26-20	525
XQ-ERC26-13	506
XQ-LM1274	107
XQ-LM2152	123AP
XQ-LM2682	128
XQ-MC1352	749
XQ-MJE9742	157
XQ-MPS9433	123AP
XQ-MPS9682	159
XQ-RD6.2E	5013A
XQ-RD11FB	5074A
XQ-RD12EC	142A
XQ-RD12FB	142A
XQ-W06	116
XQ-WO6	116
XR555	955M
XR556	978
XR567	832
XR567C	832
XR567CP	832
XR1310	801
XR1488	75188
XR1488N	75188
XR1488P	75188
XR1489	75189
XR1489N	75189
XR1489P	75189
XR2001	2011
XR2001CP	2011
XR2002	2012
XR2002CP	2012
XR2003	2013
XR2003CP	2013
XR2004	2014
XR2005	2015
XR2201CP	2011
XR2202CP	2012
XR2203CP	2013
XR2204CP	2014
XR2917	995
XR2917CP	995
XR3470	3470
XR3470ACN	3470
XR3470CP	3470
XR3524	1720
XR3525	1721
XR3525A	1721
XR4136	997
XR4136CP	997
XR4558	778A
XR6118CP	2021
XR8038	864
XR8038CN	864
XR8038CP	864
XR8038P	864
XR14412	2047
XR14412FP	2047
XR14412VP	2047
XR-558CP	926
XR-2917	995
XR-2917CP	995
XR-3470	3470
XS1	108
XS2	108
XS3	108
XS4	108
XS6	108
XS9.1B	139A
XS10	116
XS14	108
XS15	108
XS16	116
XS16A	116
XS17	116
XS17A	116
XS18	116
XS19	159
XS21	123AP
XS22	123AP
XS22(RECT.)	116
XS23	116
XS23A	116
XS26	103A
XS30	128
XS31	116
XS36	161
XS37	161
XS38	161
XS39	161
XS40	107
XS40A	116
XS101	158
XS104	158
XS121	158
XS-10	116
XS-31	116
XT1A	191
XT1B	191
XT15X3	108
XT100	158
XT200	158
XT300	126
XT400	126
XT515	190
XT516	190
XT517	190
XT518	190
XT519	190
XT520	190
XT-548A	130

PART NUMBER	NTE REPLACEMENT
XT-549A	175
XU604	116
XV604	125
XZ060	5012A
XZ070	5071A
XZ090	139A
XZ055	136A
XZ057	5011A
XZ062	5013A
XZ064	5072A
XZ084	5072A
XZ092	139A
XZ098	140A
XZ100	140A
XZ102	140A
XZ132	5022A
XZ-070	5071A
XZ-080	5072A
XZ-090	139A
XZ-049	135A
XZ-064	5072A
XZ-072	138A
XZ-076	138A
XZ-082	5072A
XZ-086	5073A
XZ-092	139A
XZ-096	140A
XZ-100	140A
XZ-122	142A
XZ-152	145A
Y0-6A	116
Y065	5071A
Y068	5014A
Y74LS266D1	74LS266
Y363	102A
Y410	121
Y633	158
Y49001-21	123AP
Y56001-21	519
Y56001-86	123AP
Y56601-08	123AP
Y56601-44	234
Y56601-45	123AP
Y56601-46	129
Y56601-47	128
Y56601-48	234
Y56601-49	123AP
Y56601-50	159
Y56601-51	123AP
Y56601-63	159
Y56601-73	123AP
Y56601-74	159
Y56601-75	123AP
Y56601-76	129
Y56601-79	159
Y56601-80	123AP
Y56601-82	159
Y56601-84	159
Y56601-86-AD	123AP
Y56601-86-AH(GREEN)	123AP
Y56601-86-AH(ORANGE)	123AP
Y56601-86AH(YELLOW)	123AP
Y56601-93	123AP
Y1531589	107
Y13310146	506
Y13310149	5015A
Y15310157	712
Y15310159	116
Y130213002	1245
Y130213003	85
Y130213004	157
Y130213005	289A
Y130213006	283
Y130213007	290A
Y130213041	519
Y130213042	525
Y130213043	116
Y130213044	525
Y130213045	552
Y133101321	107
Y133101323	85
Y133101410	177
Y133101411	109
Y133101412	109
Y133101413	177
Y133101414	5010A
Y133101415	611
Y133101417	177
Y133101419	116
Y133101440	116
Y420100070	7407
Y422306000	34
Y422306000(3)	34
Y424800104	2716
Y426800101	2716
YAAD001	5072A
YAAD004	116
YAAD007	116
YAAD009	109
YAAD010	601
YAAD020	116
YAAD017	5072A
YAAD018	177
YAAD019	116
YAAD021	5072A
YAAD022	116
YAAM003	1006
YAAN2SC1096	186
YAAN2SC1096K	186
YAAN2SC1096L	186
YAAN2SC1096M	186
YAAN2SC1096N	186
YAAN2SD141	175
YAANL2SC1096	186

PART NUMBER	NTE REPLACEMENT
YAANL2SC1096K	186A
YAANL2SC1096KLMN	186A
YAANL2SC1096L	186A
YAANL2SC1096M	186A
YAANL2SC1096N	186A
YAANL2SC1096Q	186
YAANL2SC1096R	186
YAANZ	186
YAANZSC1096	184
YAANZ2S1096	186
YAANZ2SC1096	186
YAANZ2SC1096-BLUE	186
YAANZ2SC1096-GREEN	186
YAANZ2SC1096-RED	186
YAANZ2SC1096K	186
YAANZ2SC1096L	186
YAANZ2SC1096M	186
YANZ2SC1096	186
YANZ2SC1096K	186
YANZ2SC1096L	186
YANZ2SC1096M	186
YBAD009	116
YC02P11/2	156
YD1121	177
YEAD005	614
YEAD010	5072A
YEAD030	116
YEAD014	5072A
YEAD015	139A
YEAD024	5072A
YEAD029	614
YEAD032	109
YEAD1N60P	109
YEAD1SV53	614
YEADAW01-06	137A
YEADUPC577H	1082
YEAM004	1098
YEAM53274P	7474
YEAMJM78L05	977
YEAMM5152L	1170
YEAMNJ58L05	977
YEAMNJM78L05	977
YEAMUPC577H	1082
YEAN2SC941	123AP
YEAN3SK39G	222
YGS-V47-7-51	113A
YL56	3002
YL212	3011
YL4484	3011
YL4550	3021
YL-56	3002
YL-212	3011
YL-4484	3011
YL-4550	3021
YL-4850	3021
YOD4	117
YR011	116
YR-011	116
YSG-20024	116
YSG-V47-1-3	116
YSG-V47-7-51-2	116
YSG-V47-7-51-1	116
YSG-V81-2-3	178MP
YSG-V139-2-2	109
YSG-V139-22	109
YV1	102A
YV1A	102A
YV2	102A
YZ060	5071A
YZ080	138A
YZ037	5067A
YZ047	5069A
YZ047A	5069A
YZ058	136A
YZ063	5013A
YZ065F	5071A
YZ284	5084A
YZ2065F	5071A
YZ-080	5072A
YZ-047	5069A
YZ-284	5083A
Z0040-UAA	568A
Z0064-UAA	568
Z0105BA	5655
Z0105DA	5656
Z0105MA	5657
Z0109BA	5655
Z0109DA	5656
Z0109MA	5657
Z0110BA	5655
Z0110DA	5656
Z0110MA	5657
Z0220	140A
Z0302BG	5651
Z0302DG	5652
Z0302MG	5653
Z0305BG	5651
Z0305DG	5652
Z0305MG	5653
Z0309BG	5651
Z0309DG	5652
Z0309MG	5653
Z0310BG	5641
Z0310DG	5642
Z0310MG	5643
Z0402	134A
Z0405BE	5629
Z0405DE	5629
Z0406	135A
Z0407	136A
Z0408	137A
Z0409BE	5629
Z0409DE	5629
Z0410	138A
Z0410BE	5629
Z0410DE	5629
Z0420	5077A
Z0-12	142A
Z0-12A	142A
Z0-12B	142A
Z0-27	146A
Z0-27A	146A
Z0-27B	146A
Z0A2.4	5000A
Z0A3.3	134A
Z0A3.9	134A
Z0A5.1	5010T1
Z0A5.6	5011T1
Z0A6.2	5013T1
Z0A10	5019T1
Z0A12	5021T1
Z0B3.3	134A
Z0B3.9	134A
Z0B4.7	135A
Z0B5.1	135A
Z0B5.6	136A
Z0B6.2	5013A
Z0B6.8	5014A
Z0B8.2	5016A
Z0B9.1	139A
Z0B10	140A
Z0B12	142A
Z0B15	145A
Z0B22	5030A
Z0B27	146A
Z0B27A	146A
Z0B-12	142A
Z0B-15	145A
Z0C3.3	134A
Z0C3.9	134A
Z0C4.7	135A
Z0C5.1	135A
Z0C5.6	136A
Z0C6.2	137A
Z0C6.8	5014A
Z0C8.2	5016A
Z0C9.1	139A
Z0C10	140A
Z0C12	142A
Z0C15	145A
Z0C18	5027A
Z0C20	5029A
Z0C22	5030A
Z0C27	146A
Z0C27A	146A
Z0C-15	145A
Z0D3.3	134A
Z0D3.9	134A
Z0D4.7	135A
Z0D5.1	135A
Z0D5.6	136A
Z0D6.2	137A
Z0D8.2	5016A
Z0D9.1	139A
Z0D10	140A
Z0D12	142A
Z0D15	145A
Z0D20	5029A
Z0D22	5030A
Z0D27	5033A
Z0D27B	146A
Z0D-15	145A
Z01-13	143A
Z0211	135A
Z0212	136A
Z0214	137A
Z0216	138A
Z0217	5072A
Z0219	139A
Z0222	142A
Z0225	145A
Z0228	5077A
Z0234	146A
Z0254	5098A
Z0255	5099A
Z0411	5072A
Z0412	139A
Z0413	140A
Z0414	5074A
Z0415	142A
Z0416	143A
Z0417	144A
Z0418	145A
Z0419	5075A
Z0423	5081A
Z0424	146A
Z0426	147A
Z0427	5085A
Z0432	148A
Z0433	149A
Z0436	150A
Z0439	151A
Z1A2.4	5000A
Z1A2.7	5002A
Z1A3.3	134A
Z1A3.9	134A
Z1A4.7	5009A
Z1A8.2	5072A
Z1A8.2A	5072A
Z1A8.2B	5072A
Z1A103-018	125
Z1B3.9	134A
Z1B4.7	135A
Z1B5.1	135A
Z1B5.6	136A
Z1B6.2	137A
Z1B6.8	5014A
Z1B7.5	138A
Z1B8.2	5016A
Z1B9.1	139A
Z1B10	140A
Z1B12	142A
Z1B15	145A
Z1B18	5027A
Z1B20	5029A
Z1B22	5030A
Z1B27	146A
Z1B27A	146A
Z1B-15	145A
Z1C3.3	134A
Z1C3.9	134A
Z1C4.7	135A
Z1C5.1	135A
Z1C5.6	135A
Z1C6.2	137A
Z1C8.2	5016A
Z1C9.1	5018A
Z1C10	140A
Z1C12	142A
Z1C15	145A
Z1C18	5027A
Z1C20	5029A
Z1C22	5030A
Z1C27	146A
Z1C27B	146A
Z1C-15	145A
Z1D3.3	134A
Z1D3.9	5007A
Z1D4.7	135A
Z1D5.1	135A
Z1D5.6	136A
Z1D6.2	137A
Z1D7.5	138A
Z1D8.2	5016A
Z1D9.1	5018A
Z1D10	140A
Z1D12	142A
Z1D15	145A
Z1D18	5027A
Z1D20	5029A
Z1D22	5030A
Z1D27	5033A
Z1D27A	146A
Z1D-15	145A
Z2.75	5063A
Z2A33F	5066A
Z2A36F	134A
Z2A51F	135A
Z2A56CF	136A
Z2A56F	136A
Z2A62F	137A
Z2A82F	5072A
Z2A91F	139A
Z2A120F	142A
Z2A150F	145A
Z2A-150F	145A
Z2B3.9	5113A
Z2B4.7	5115A
Z2B5.6	5117A
Z2B6.2	5119A
Z2B7.5	5121A
Z2B9.1	5124A
Z2B10	5125A
Z2B12	5127A
Z2B15	5130A
Z2B18	5133A
Z2B22	5136A
Z2B33	5142A
Z2C3.9	5113A
Z2C4.7	5115A
Z2C5.6	5117A
Z2C6.2	5119A
Z2C7.5	5121A
Z2C9.1	5124A
Z2C10	5125A
Z2C12	5127A
Z2C15	5130A
Z2C18	5133A
Z2C22	5136A
Z2C33	5142A
Z2D3.9	5113A
Z2D5.6	5117A
Z2D6.2	5119A
Z2D7.5	5121A
Z2D9.1	5124A
Z2D10	5125A
Z2D12	5127A
Z2D15	5130A
Z2D18	5133A
Z2D22	5136A
Z2D27	5139A
Z2D33	5142A
Z3.3	5005A
Z3.6	134A
Z3.9	134A
Z3B3.9	5174AK
Z3B3.9R	5174A
Z3B4.3	5175AK
Z3B4.3R	5175A
Z3B4.7	5176AK
Z3B4.7R	5176A
Z3B5.1	5177AK
Z3B5.1R	5177A
Z3B5.6	5178AK
Z3B5.6R	5178A
Z3B6.2	5180AK
Z3B6.2R	5180A
Z3B6.8	5181AK
Z3B6.8R	5181A
Z3B7.5	5182AK
Z3B7.5R	5182A
Z3B8.2	5183AK
Z3B8.2R	5183A
Z3B9.1	5185AK
Z3B9.1R	5185A
Z3B10	5186AK
Z3B10R	5186A
Z3B11	5187AK
Z3B11R	5187A
Z3B12	5188AK
Z3B12R	5188A
Z3B13	5189AK
Z3B13R	5189A
Z3B15	5191AK
Z3B15R	5191A
Z3B16	5192AK
Z3B16R	5192A
Z3B18	5194AK
Z3B18R	5194A
Z3B20	5196AK
Z3B20R	5196A
Z3B22	5197AK
Z3B22R	5197A
Z3B24	5198AK
Z3B24R	5198A
Z3B27	5200AK
Z3B27R	5200A
Z3B30	5202AK
Z3B30R	5202A
Z3B33	5203AK
Z3B33R	5203A
Z3B36	5204AK
Z3B39	5205AK
Z3B39CE	5113A
Z3B39R	5205A
Z3B43	5206AK
Z3B43R	5206A
Z3B47	5208AK
Z3B47CF	5115A
Z3B47R	5208A
Z3B51	5210AK
Z3B51R	5210A
Z3B56	5212AK
Z3B56CF	5117A
Z3B56R	5212A
Z3B62	5214AK
Z3B62CF	5119A
Z3B62R	5214A
Z3B68	5215AK
Z3B68R	5215A
Z3B75	5216AK
Z3B75CF	5121A
Z3B75R	5216A
Z3B82	5217AK
Z3B82R	5217A
Z3B91	5219AK
Z3B91CF	5124A
Z3B91R	5219A
Z3B100	5220AK
Z3B100CF	5125A
Z3B100R	5220A
Z3B110	5222AK
Z3B110R	5222A
Z3B120	5223AK
Z3B120CF	5127A
Z3B120R	5223A
Z3B130	5224AK
Z3B130R	5224A
Z3B150	5226AK
Z3B150CF	5130A
Z3B150R	5226A
Z3B160	5227AK
Z3B160R	5227A
Z3B180	5230AK
Z3B180CF	5133A
Z3B180R	5230A
Z3B200	5232AK
Z3B200R	5232A
Z3B220CF	5136A
Z3B270CF	5139A
Z3B330CF	5142A
Z3B560CF	5148A
Z3B820CF	5153A
Z3B1000CF	5156A
Z3R36R	5204A
Z4.7	135A
Z4A8.2	5072A
Z4B	5007A
Z4B4.3	5068A
Z4B5.1	135A
Z4B5.6	136A
Z4B9.1	139A
Z4B12	142A
Z4B15	145A
Z4B27	146A
Z4B27-9	146A
Z4B33	147A
Z4B43	5087A
Z4B51	5089A
Z4B91	5095A
Z4B110	151A
Z4B130	5098A
Z4B-15	145A
Z4C3.6	134A
Z4C5.6	136A
Z4D3.6	134A
Z4D5.6	136A
Z4MW333	123AP
Z4X5.1A	135A
Z4X5.1B	135A
Z4X5.6	136A
Z4X9.1	139A
Z4X11	141A
Z4X12	142A
Z4X13	143A
Z4X14	144A
Z4X14B	144A
Z4X15	145A
Z4X-15	145A
Z4XL6.2	137A
Z4XL6.2B	137A
Z4XL7.5	138A
Z4XL9.1	139A
Z4XL9.1B	139A
Z4XL12	142A
Z4XL12B	142A
Z4XL14	144A
Z4XL14B	144A
Z4XL75	138A
Z5.1	5010A
Z5.1B	5010A
Z5.1BTA	5010A
Z5.6	136A
Z5.6BMTA	5011A
Z5A3.3	5005A
Z5A3.9	134A
Z5A5.1	5010T1
Z5A5.6	5011T1
Z5A6.2	5013T1
Z5A10	5019T1
Z5A12	5021T1
Z5B2	142A
Z5B3.3	134A
Z5B3.6	134A
Z5B3.9	134A
Z5B4.7	135A
Z5B5.1	135A
Z5B5.6	136A
Z5B6.2	137A
Z5B6.8	5014A
Z5B8.2	5016A
Z5B9.1	139A
Z5B10	140A
Z5B12	142A
Z5B15	145A
Z5B18	5027A
Z5B20	5029A
Z5B22	5030A
Z5B-15	145A
Z5C3.3	134A
Z5C3.9	134A
Z5C4.7	135A
Z5C5.1	135A
Z5C5.6	136A
Z5C6.2	137A
Z5C6.8	5014A
Z5C8.2	5016A
Z5C9.1	139A
Z5C10	140A
Z5C12	142A
Z5C15	145A
Z5C18	5027A
Z5C20	5029A
Z5C22	5030A
Z5C-15	145A
Z5D3.3	134A
Z5D3.9	134A
Z5D4.7	135A
Z5D5.1	135A
Z5D5.6	136A
Z5D6.2	137A
Z5D6.8	5014A
Z5D8.2	5016A
Z5D9.1	139A
Z5D10	140A
Z5D12	142A
Z5D15	145A
Z5D18	5027A
Z5D20	5029A
Z5D22	5030A
Z5D91CF	5185A
Z5D100CF	5186A
Z5D110CF	5187A
Z5D120CF	5188A
Z5D130CF	5189A
Z5D150CF	5191A
Z5D160CF	5192A
Z5D180CF	5194A
Z5D200CF	5196A
Z5D220CF	5197A
Z5D240CF	5198A
Z5D270CF	5200A
Z5D300CF	5202A
Z5D330CF	5203A
Z5D360CF	5204A
Z5D390CF	5205A
Z5D430CF	5206A
Z5D470CF	5208A
Z5D510CF	5210A
Z5D560CF	5029A
Z5D620CF	5214A
Z5D680CF	5215A
Z5D750CF	5216A
Z5D820CF	5217A
Z5D910CF	5219A
Z5D1000CF	5220A
Z5D-15	145A
Z6	5070A
Z6.2	137A
Z6.2A	137A
Z6.8	5014A
Z6.8BHTA	5014A
Z6.8V	5071A
Z6A2	5012A
Z7.5	138A
Z7A1(ZENER)	5014A
Z8.2	5016A
Z8.2A	5072A
Z8.2B	5072A
Z8.2C	5072A
Z8.2D	5072A
Z9.1B	139A
Z9.1B1	139A
Z9.1BL	5018A
Z10	140A
Z10A	5019A
Z10B	5019A
Z10K	140A
Z11B	5020A
Z11B1	5020A
Z11BL	5020A
Z11BLTA	5020A
Z11BM	5020A
Z12.0	5021A
Z12(ZENER)	5021A
Z12A	142A
Z12B	5021A
Z12BM	5021A
Z12BMTA	5021A
Z12K	142A
Z14B	144A
Z15	145A
Z15K	145A
Z18	5027A
Z20	104
Z22	5030A
Z24	5031A
Z24A	5031A
Z24BL	5023A
Z27	5033A
Z27-A	146A
Z30	5036A
Z30B	5035A
Z30BM	5035A
Z33	147A
Z35	5085A
Z80	3880
Z80-CPU-CS	3880
Z80-CPU-PS	3880
Z80-CPUB1	3880
Z80-CPUD1	3880
Z80-CTC-CS	3882
Z80-CTC-PS	3882
Z80-CTCB1	3882
Z80-CTCD1	3882
Z80-P10	3881
Z80-PI0	3881
Z80-PIO	3881
Z80-PIO-CS	3881
Z80-PIO-PS	3881
Z80-PIOB1	3881
Z80-PIOD1	3881
Z80A	3880
Z80A-CPU	3880
Z80A-CPU-CS	3880
Z80A-CPU-PS	3880
Z80A-CPUB1	3880
Z80A-CPUD1	3880
Z80A-CTC	3882
Z80A-CTC-CS	3882
Z80A-CTC-PS	3882
Z80A-CTCB1	3882
Z80A-CTCD1	3882
Z80A-PIO	3881
Z80A-PIO-CS	3881
Z80A-PIO-PS	3881
Z80A-PIOB1	3881
Z80A-PIOD1	3881
Z80ACPU	3880
Z80ACTC	3882
Z80APIO	3881
Z80PIO	3881
Z92	194
Z101	5072A
Z111Z	142A
Z537	147A
Z631	149A
Z694	139A
Z714	139A
Z801	137A
Z1000	5005A
Z1002	5007A
Z1004	5009A
Z1006	5011A
Z1008	5014A
Z1010	5016A
Z1012	5019A
Z1014	5021A
Z1016	5024A
Z1018	5027A
Z1020	5030A
Z1022	5033A
Z1024	5036A
Z1100	5067A
Z1100-C	5067A
Z1102	5069A
Z1102-C	5069A
Z1103	135A
Z1104	136A
Z1104-C	136A
Z1106	5071A
Z1106-C	5071A
Z1107	138A
Z1108	5072A
Z1108-C	5072A
Z1109	139A
Z1110	140A
Z1110-C	140A
Z1112	142A
Z1112-C	142A
Z1112C	142A
Z1114	145A
Z1114-C	145A
Z1116	5077A
Z1116-C	5077A
Z1118	5080A
Z1118-C	5080A
Z1120	146A
Z1120-C	146A
Z1122	147A
Z1124	5086A
Z1125	5086A
Z1126	5088A
Z1128	5090A
Z1130	149A
Z1132	150A
Z1134	151A
Z1136	5097A
Z1138	5100A
Z1140	5011A
Z1145	5011A
Z1150	5011A
Z1155	5011A
Z1160	5011A
Z1165	5011A
Z1170	5011A
Z1200	5113A
Z1202	5069A
Z1203	5116A
Z1204	5117A
Z1206	5120A
Z1207	5121A
Z1208	5122A
Z1209	5124A
Z1210	140A
Z1212	142A
Z1214	145A
Z1216	5077A
Z1218	5136A
Z1220	146A
Z1222	147A
Z1226	148A
Z1238	5161A
Z1240	5011A
Z1245	5011A
Z1250	5011A
Z1255	5011A
Z1260	5011A
Z1265	5011A
Z1270	5011A
Z1302	5176AK
Z1304	5178AK
Z1306	5181AK
Z1308	5183AK
Z1310	5186A
Z1312	5188A
Z1314	5191A
Z1316	5194A
Z1318	5197A
Z1320	5200A
Z1322	5203A
Z1324	5205A
Z1326	5208A
Z1328	5212A
Z1330	5215A
Z1332	5217A
Z1334	5220A
Z1336	5223A
Z1338	5226A
Z1340	5230A
Z1500	5113A
Z1502	5115A
Z1504	5116A
Z1506	5117A
Z1507	5120A
Z1508	5121A
Z1510	5122A
Z1512	5124A
Z1514	5125A
Z1516	5127A
Z1518	5131A
Z1520	5133A
Z1522	5136A
Z1524	5139A
Z1526	5142A
Z1528	5146A
Z1530	5147A
Z1532	5156A
Z1540	5011A
Z1545	5011A
Z1550	5011A
Z1555	5011A
Z1560	5011A
Z1565	5011A
Z1570	5011A
Z2525	5136A
Z2530	5141A
Z2548	5159A
Z3305	5247A
Z3307	5249A
Z3309	5252A
Z3311	5254A
Z3314	5257A
Z3317	5260A
Z3320	5263A
Z3323	5266A
Z3325	5269A
Z3327	5271A
Z3334	5278A
Z3340	5285A
Z5140	5011A
Z5145	5011A
Z5150	5011A
Z5155	5011A
Z5160	5011A
Z5165	5011A
Z5170	5011A
Z5240	5011A

PART NUMBER	NTE REPLACEMENT
Z5250	5011A
Z5255	5011A
Z5260	5011A
Z5265	5011A
Z5270	5011A
Z5540	5011A
Z5545	5011A
Z5550	5011A
Z5555	5011A
Z5560	5011A
Z5565	5011A
Z5570	5011A
Z8400APS	3880
Z10003	923D
Z330611	116
Z-15	145A
Z-15K	145A
Z-175-011	177
Z-963B	142A
Z-1004	5069A
Z-1006	136A
Z-1010	138A
Z-1012	5019A
Z-1014	142A
Z-1016	145A
Z-1016A	145A
Z-1022	146A
Z-1022-3	146A
Z-1024	147A
Z-1068	4959
Z-1102	5069A
Z-1104	136A
Z-1112C	142A
Z-1114	145A
Z-1120	146A
Z-1122	147A
Z-1128	148A
Z-1132	150A
Z-1140	136A
Z-1145	136A
Z-1150	136A
Z-1155	136A
Z-1160	136A
Z-1165	136A
Z-1170	136A
Z-1240	136A
Z-1245	136A
Z-1250	136A
Z-1255	136A
Z-1260	136A
Z-1265	136A
Z-1270	136A
Z-1540	136A
Z-1545	136A
Z-1550	136A
Z-1555	136A
Z-1560	136A
Z-1565	136A
Z-1570	136A
Z-5140	136A
Z-5145	136A
Z-5150	136A
Z-5155	136A
Z-5160	136A
Z-5165	136A
Z-5170	136A
Z-5240	136A
Z-5245	136A
Z-5250	136A
Z-5255	136A
Z-5260	136A
Z-5265	136A
Z-5270	136A
Z-5540	136A
Z-5545	136A
Z-5550	136A
Z-5555	136A
Z-5560	136A
Z-5565	136A
Z-5570	136A
Z-28058-1	123AP
Z/D27	146A
ZA8.2	5072A
ZA8.2A	5072A
ZA8.2B	5072A
ZA9.1	139A
ZA9.1A	139A
ZA9.1B	139A
ZA11	141A
ZA11A	141A
ZA11B	141A
ZA12	142A
ZA12A	142A
ZA12B	142A
ZA13	143A
ZA13A	143A
ZA13B	143A
ZA15	145A
ZA15A	145A
ZA15B	145A
ZA15V	145A
ZA27	146A
ZA27A	146A
ZA27B	145A
ZA33	147A
ZA33A	147A
ZA33B	147A
ZA56	148A
ZA56A	148A
ZA56B	148A
ZA62	149A
ZA62A	149A
ZA62B	149A
ZA82	150A
ZA82A	150A
ZA82B	150A
ZA110	151A
ZA110A	151A
ZA110B	151A
ZA150	166
ZA29312	519
ZA100962E	108
ZA105604	102A
ZA-15B	145A
ZAC7.5	5121A
ZAC7.5A	5121A
ZAC7.5B	5121A
ZAC9.1	5124A
ZAC9.1A	5124A
ZAC9.1B	5124A
ZAC10	5125A
ZAC10A	5125A
ZAC10B	5125A
ZAC12	5127A
ZAC12A	5127A
ZAC12B	5127A
ZAC15	5130A
ZAC15A	5130A
ZAC15B	5130A
ZAC18	5133A
ZAC18A	5133A
ZAC18B	5133A
ZAC22	5136A
ZAC22A	5136A
ZAC22B	5136A
ZAC27	5139A
ZAC27A	5139A
ZAC27B	5139A
ZAC33	5142A
ZAC33A	5142A
ZAC33B	5142A
ZAC56	5148A
ZAC56A	5148A
ZAC56B	5148A
ZAC82	5153A
ZAC82A	5153A
ZAC82B	5153A
ZAC100	5156A
ZAC100A	5156A
ZAC100B	5156A
ZAC120	5158A
ZAC120A	5158A
ZAC120B	5158A
ZAG-9673	159
ZAR110	5809
ZAR210	5890
ZAR610	5809
ZAR710	5809
ZAX9.1	118
ZB1	5079A
ZB1.8	138A
ZB1-09	139A
ZB1-1	5074A
ZB1-6	5070A
ZB1-7	5071A
ZB1-8	137A
ZB1-9	139A
ZB1-9V	139A
ZB1-10	142A
ZB1-10A	140A
ZB1-11	141A
ZB1-12	142A
ZB1-13	143A
ZB1-14	144A
ZB1-15	145A
ZB1-16	5075A
ZB1-16V	5075A
ZB1-18	5077A
ZB1-19	5078A
ZB1-23	5081A
ZB1-27	146A
ZB1-31	5084A
ZB1-35	147A
ZB1-50	5089A
ZB1-100	5096A
ZB1-100-2	5096A
ZB1-110	151A
ZB1-125	5098A
ZB1-130	5098A
ZB3.3	134A
ZB3.6A	134A
ZB3.6B	134A
ZB4.7	135A
ZB5.1	135A
ZB5.6	136A
ZB5.6A	136A
ZB5.6B	136A
ZB6.2	137A
ZB6.2A	137A
ZB6.2B	137A
ZB6.8	5014A
ZB6.8A	5071A
ZB6.8B	5071A
ZB7.5	138A
ZB7.5A	138A
ZB7.5B	138A
ZB8.2	5016A
ZB8.2A	5072A
ZB8.2B	5072A
ZB9.1	139A
ZB9.1A	139A
ZB9.1B	139A
ZB10	140A
ZB10A	140A
ZB10B	140A
ZB10X	140A
ZB11	143A
ZB11A	5074A
ZB11B	5074A
ZB12	142A
ZB12A	142A
ZB12B	142A
ZB13	143A
ZB13A	145A
ZB13B	143A
ZB15	145A
ZB15A	145A
ZB15B	145A
ZB16	5075A
ZB16A	5075A
ZB16B	5075A
ZB18	5027A
ZB18A	5077A
ZB18B	5077A
ZB20	5029A
ZB20A	5079A
ZB20B	5079A
ZB22	5030A
ZB22A	5080A
ZB22B	5080A
ZB24	5081A
ZB24A	5081A
ZB24B	5081A
ZB27	146A
ZB27-3	146A
ZB27A	146A
ZB27A-3	146A
ZB27B	146A
ZB27B-3	146A
ZB30	5084A
ZB30A	5084A
ZB30B	5084A
ZB33	147A
ZB33A	147A
ZB33B	147A
ZB36	5085A
ZB36A	5085A
ZB36B	5085A
ZB39	5086A
ZB39A	5086A
ZB39B	5086A
ZB43	5087A
ZB43A	5087A
ZB43B	5087A
ZB47	5088A
ZB47A	5088A
ZB47B	5088A
ZB51	5089A
ZB51A	5089A
ZB51B	5089A
ZB56	5090A
ZB56A	5090A
ZB56B	5090A
ZB62	149A
ZB62A	149A
ZB62B	149A
ZB68	5092A
ZB68A	5092A
ZB68B	5092A
ZB75	5093A
ZB75A	5093A
ZB75B	5093A
ZB82	150A
ZB82A	150A
ZB82B	150A
ZB91	5095A
ZB91A	5095A
ZB91B	5095A
ZB100	5096A
ZB100A	5096A
ZB100B	5096A
ZB110	151A
ZB110A	151A
ZB110B	151A
ZB120	5097A
ZB120A	5097A
ZB120B	5097A
ZB130	5098A
ZB130A	5098A
ZB130B	5098A
ZB150	5100A
ZB150A	5100A
ZB150B	5100A
ZB160	5101A
ZB160A	5101A
ZB160B	5101A
ZB180	5103A
ZB180A	5103A
ZB180B	5103A
ZB200	5105A
ZB200A	5105A
ZB200B	5105A
ZB203	134A
ZB204	5068A
ZB205	136A
ZB206	137A
ZB207	138A
ZB209	5073A
ZB210	140A
ZB212	142A
ZB215	5075A
ZB220	5079A
ZB225	5082A
ZB230	5084A
ZB235	5085A
ZB240	5087A
ZB250	5089A
ZB-1	141A
ZB-1-9.5	139A
ZB-1-15A	118
ZB-1-35	147A
ZB-11	5074A
ZB-15A	145A
ZB-31.12	142A
ZBC7.5	5121A
ZBC12	5127A
ZBC15	5130A
ZBC18	5133A
ZBC22	5136A
ZBC27	5139A
ZBC33	5142A
ZBC56	5148A
ZBC82	5153A
ZBC100	5156A
ZBC120	5158A
ZBI-09	139A
ZBI-13	136A
ZBU-19	5079A
ZC02-3	146A
ZC012	142A
ZC015	145A
ZC027	146A
ZC027-3	146A
ZC033	147A
ZC1N34A	109
ZC1S352M	614
ZC1S358S	177
ZC2SA70	160
ZC2SA71	160
ZC2SA71A	160
ZC2SA101	160
ZC2SA101BA	160
ZC2SA102	160
ZC2SA102CA	160
ZC2SA103	160
ZC2SA103CA	160
ZC2SA377	160
ZC2SA700A	160
ZC2SA700B	160
ZC2SB172	158
ZC2SB172A	158
ZC7.5	5121A
ZC9.1	5124A
ZC10	5125A
ZC12	5127A
ZC18	5133A
ZC22	5136A
ZC27	5139A
ZC33	5142A
ZC56	5148A
ZC82	5153A
ZC100	5156A
ZC103	134A
ZC105	136A
ZC106	137A
ZC107	138A
ZC109	5073A
ZC110	140A
ZC112	142A
ZC115	145A
ZC120	5158A
ZC125	5082A
ZC130	5084A
ZC135	5085A
ZC140	5087A
ZC150	5089A
ZC160	149A
ZC180	150A
ZC2010	5125A
ZC2012	5127A
ZC2015	5130A
ZC2018	5133A
ZC2022	5136A
ZC2027	5139A
ZC2033	5142A
ZC-015	145A
ZC-140	152
ZCC7.5	5121A
ZCC12	5127A
ZCC15	5130A
ZCC22	5136A
ZCC27	5139A
ZCC33	5142A
ZCC36	5143A
ZCC36A	5143A
ZCC36B	5143A
ZCC56	5148A
ZCC82	5153A
ZCC100	5156A
ZCC120	5158A
ZCOM3679	116
ZCOM-5683-0	116
ZD012	142A
ZD015	145A
ZD027	146A
ZD033	147A
ZD2.7EB1	5002A
ZD3.9	5067A
ZD4.7	5113A
ZD5.1	135A
ZD5.1A	135A
ZD5.1B	135A
ZD5.6	136A
ZD5.6A	136A
ZD5.6B	136A
ZD5V	135A
ZD6.2	137A
ZD6.2A	137A
ZD6.2B	137A
ZD6.2V	137A
ZD6.8	5071A
ZD7.5	138A
ZD9.1	139A
ZD9.1A	139A
ZD9.1B	139A
ZD10	140A
ZD10B	139A
ZD11V	5074A
ZD12	142A
ZD12(C)	5021A
ZD12A	142A
ZD12B	142A
ZD12C	5021A
ZD13	143A
ZD14	5129A
ZD14V	144A
ZD15	145A
ZD15A	145A
ZD15B	108
ZD18	5077A
ZD19	5078A
ZD20	5079A
ZD27	146A
ZD27-3	146A
ZD27A	146A
ZD27B	146A
ZD30	5084A
ZD33	147A
ZD33A	147A
ZD33B	147A
ZD36	5085A
ZD36A	134A
ZD36B	134A
ZD51A	135A
ZD51B	135A
ZD56	5090A
ZD56A	136A
ZD56B	137A
ZD62	149A
ZD62A	149A
ZD62B	149A
ZD75	5152A
ZD82	150A
ZD82A	150A
ZD82B	150A
ZD91	138A
ZD91A	138A
ZD91B	138A
ZD110	151A
ZD110A	151A
ZD110B	151A
ZD200	5105A
ZD2010	5125A
ZD2012	5127A
ZD2015	5130A
ZD2018	5133A
ZD2027	5139A
ZD2028	5136A
ZD2033	5142A
ZD-015	145A
ZD-027-3	146A
ZD-4.1V	5068A
ZD-6.8V	5014A
ZD-15	145A
ZD-15A	145A
ZD-15B	145A
ZDDGGZA10Y	5019A
ZDP-D22-69-54	129
ZDP-D22-69:54	129
ZDT	123AP
ZDT10	108
ZDT11	108
ZDT20	108
ZDT21	108
ZDT30	108
ZDT31	108
ZDT-30	108
ZDT-31	108
ZE4.7	5009A
ZE5.6	136A
ZE6.8	5014A
ZE8.2	5016A
ZE9.1	139A
ZE10	140A
ZE12	142A
ZE12A	142A
ZE12B	142A
ZE15	145A
ZE15A	145A
ZE15B	145A
ZE22	5030A
ZE27	146A
ZE27A	146A
ZE27B	146A
ZE33	147A
ZE33A	147A
ZE33B	147A
ZE62	149A
ZE62A	149A
ZE62B	149A
ZE82	150A
ZE82A	150A
ZE82B	150A
ZE110	151A
ZE110A	151A
ZE110B	151A
ZE-1.5	109
ZE-15	145A
ZE-15A	145A
ZE-15B	145A
ZE-18	5027A
ZEC5.6	136A
ZEC12	142A
ZEC27	146A
ZEN100	123AP
ZEN101	129
ZEN102	123AP
ZEN103	123AP
ZEN104	108
ZEN105	161
ZEN106	159
ZEN107	159
ZEN108	108
ZEN109	108
ZEN110	123AP
ZEN111	123AP
ZEN112	123AP
ZEN113	123AP
ZEN114	123AP
ZEN115	123AP
ZEN116	199
ZEN117	229
ZEN118	108
ZEN119	123AP
ZEN120	123AP
ZEN121	229
ZEN122	159
ZEN123	132
ZEN124	221
ZEN125	194
ZEN126	123AP
ZEN127	123AP
ZEN128	172A
ZEN129	6409
ZEN200	124
ZEN201	225
ZEN202	184
ZEN203	185
ZEN204	162
ZEN205	154
ZEN206	165
ZEN207	225
ZEN208	191
ZEN209	182
ZEN210	184
ZEN211	185
ZEN300	160
ZEN301	160
ZEN302	158
ZEN303	102
ZEN304	158
ZEN305	158
ZEN306	102
ZEN307	158
ZEN308	158
ZEN309	102A
ZEN310	102A
ZEN311	126
ZEN312	126
ZEN313	126
ZEN314	126
ZEN315	101
ZEN325	104
ZEN326	121
ZEN327	213
ZEN328	127
ZEN330	121
ZEN331	121
ZEN401	5806
ZEN403	5878
ZEN430	109
ZEN431	112
ZEN432	178MP
ZEN433	167
ZEN452	612
ZEN453	614
ZEN500	5013A
ZEN501	138A
ZEN502	5021A
ZEN503	5027A
ZEN504	5033A
ZEN505	138A
ZEN506	143A
ZEN507	144A
ZEN508	145A
ZEN512	147A
ZEN513	5098A
ZEN514	5099A
ZEN515	5085A
ZEN516	5137A
ZEN517	5141A
ZEN602	722
ZEN604	708
ZEN605	712
ZEN607	714
ZENER-122	142A
ZENER-132	5082A
ZENER-136	5078A
ZENER7-1V	138A
ZF2.7	5063A
ZF2.7P	5002A
ZF3.3	5066A
ZF3.3P	5005A
ZF3.6	134A
ZF3.9	134A
ZF4.3	5068A
ZF4.7	135A
ZF5.1	135A
ZF5.6	136A
ZF6.2	137A
ZF6.8	5071A
ZF7.5	138A
ZF8.2	5072A
ZF8.2P	5072A
ZF8A	5072A
ZF9.1	139A
ZF10	140A
ZF11A	151A
ZF12	142A
ZF12A	142A
ZF12B	142A
ZF13	143A
ZF13.3R	5066A
ZF13.6R	134A
ZF15	145A
ZF15.6R	136A
ZF15A	145A
ZF15B	145A
ZF16	5075A
ZF16.2	137A
ZF17.5	138A
ZF18	5077A
ZF19.1	139A
ZF20	5079A
ZF22	5080A
ZF23.3R	5066A
ZF23.6R	134A
ZF23.9R	5067A
ZF24.3R	5068A
ZF24.7R	5069A
ZF25.6R	136A
ZF26.2	137A
ZF26.8	5071A
ZF27.8	138A
ZF27A	146A
ZF27B	146A
ZF29.1	139A
ZF30	5084A
ZF33	147A
ZF33A	147A
ZF33B	147A
ZF43	5068A
ZF62	149A
ZF62A	149A
ZF62B	149A
ZF82	150A
ZF82A	150A
ZF82B	150A
ZF110	140A
ZF112	142A
ZF113	143A
ZF115	145A
ZF116	5075A
ZF122	5080A
ZF124	5081A
ZF127	146A
ZF130	5084A
ZF133	147A
ZF136	5085A
ZF139	5086A
ZF156	5090A
ZF162	149A
ZF182	150A
ZF210	140A
ZF211	5074A
ZF212	142A
ZF213	143A
ZF215	145A
ZF216	5075A
ZF222	5080A
ZF224	5081A
ZF227	146A
ZF230	5084A
ZF233	147A
ZF236	5085A
ZF239	5086A
ZF262	149A
ZF282	150A
ZF413	5068A
ZF-8.2	5072A
ZF-15	145A
ZF-15A	145A
ZF-15B	145A
ZF-16	145A
ZG2.7	5002A
ZG3.3	5005A
ZG3.9	134A
ZG4.7	135A
ZG5.6	136A
ZG6.8	5014A
ZG8.2	5016A
ZG9.1	139A
ZG10	140A
ZG12	142A
ZG15	145A
ZG15A	145A
ZG15B	145A
ZG18	5027A
ZG22	5030A
ZG27	146A
ZG27A	146A
ZG27B	146A
ZG33	147A
ZG33A	147A
ZG33B	147A
ZG62	149A
ZG62A	149A
ZG62B	149A
ZG82	150A
ZG82A	150A
ZG82B	150A
ZG100118	5085A
ZG100119	145A
ZG100120	5080A
ZG-15	145A
ZG-15B	145A
ZH9.1	139A
ZH9.1A	139A
ZH9.1B	139A
ZH11	141A
ZH11A	141A
ZH11B	141A
ZH12	142A
ZH12A	142A
ZH12B	142A
ZH13	143A
ZH13A	143A
ZH13B	143A

PART NUMBER	NTE REPLACEMENT
ZH15	145A
ZH15A	145A
ZH15B	145A
ZH27	146A
ZH27A	146A
ZH27B	146A
ZH33	147A
ZH33A	147A
ZH33B	147A
ZH56	148A
ZH56A	148A
ZH56B	148A
ZH62	149A
ZH62A	149A
ZH62B	149A
ZH82	150A
ZH82A	150A
ZH82B	150A
ZH103	134A
ZH105	136A
ZH106	137A
ZH107	138A
ZH109	5073A
ZH110	151A
ZH110A	151A
ZH110B	151A
ZH112	142A
ZH115	5075A
ZH120	5079A
ZH125	5082A
ZH130	5084A
ZH135	5085A
ZH140	5087A
ZH150	5089A
ZH160	149A
ZH170	5092A
ZH180	150A
ZH212	5188A
ZH225	5199A
ZH-15	145A
ZH-15A	145A
ZH-15B	145A
ZJ12	142A
ZJ12A	142A
ZJ12B	142A
ZJ13	158
ZJ15	145A
ZJ15A	145A
ZJ15B	145A
ZJ27	146A
ZJ27A	146A
ZJ27B	146A
ZJ33	147A
ZJ33A	147A
ZJ33B	147A
ZJ40	108
ZJ62	149A
ZJ62A	149A
ZJ62B	149A
ZJ72	160
ZJ73	160
ZJ82	150A
ZJ82A	150A
ZJ82B	150A
ZJ110	151A
ZJ110A	151A
ZJ110B	151A
ZJ252B	116
ZJ-15	145A
ZJ-15A	145A
ZJ-15B	145A
ZL6	5012A
ZM3.3	5066A
ZM3.3A	5066A
ZM3.3B	5066A
ZM3.6	134A
ZM3.6A	134A
ZM3.6B	134A
ZM3.9	5067A
ZM3.9A	5067A
ZM3.9B	5067A
ZM4.3	5068A
ZM4.3A	5068A
ZM4.3B	5068A
ZM4.7	5069A
ZM4.7A	5069A
ZM4.7B	5069A
ZM5.1	135A
ZM5.1A	135A
ZM5.1B	135A
ZM5.6	136A
ZM5.6A	136A
ZM5.6B	136A
ZM6	5012A
ZM6.2	137A
ZM6.2A	137A
ZM6.2B	137A
ZM6.8	5071A
ZM6.8A	5071A
ZM6.8B	5071A
ZM6A	5012A
ZM6B	5012A
ZM7.5	138A
ZM7.5A	138A
ZM7.5B	138A
ZM8.2	5072A
ZM8.2A	5072A
ZM8.2B	5072A
ZM8.2C	5072A
ZM8.2D	5072A
ZM8.7	5073A
ZM8.7A	5073A
ZM8.7B	5073A
ZM9.1	139A
ZM9.1A	139A
ZM9.1B	139A
ZM10	140A
ZM10A	140A
ZM10B	140A
ZM11	5074A
ZM11A	5074A
ZM11B	5074A
ZM12	142A
ZM12A	142A
ZM12B	142A
ZM13	5022A
ZM13A	5022A
ZM13B	143A
ZM14	5023A
ZM14A	5023A
ZM14B	5023A
ZM15	145A
ZM15A	145A
ZM15B	145A
ZM16	5075A
ZM16A	5075A
ZM16B	5025A
ZM17	5076A
ZM17A	5076A
ZM17B	5076A
ZM18	5077A
ZM18A	5077A
ZM18B	5077A
ZM19	5078A
ZM19A	5078A
ZM19B	5078A
ZM20	5079A
ZM20A	5079A
ZM20B	5079A
ZM22	5080A
ZM22A	5080A
ZM22B	5080A
ZM24	5081A
ZM24A	5081A
ZM24B	5081A
ZM25	5082A
ZM25A	5082A
ZM25B	5082A
ZM27	146A
ZM27A	146A
ZM27B	146A
ZM28	5034A
ZM28A	5034A
ZM28B	5034A
ZM30	5084A
ZM30A	5084A
ZM30B	5084A
ZM33	147A
ZM33A	147A
ZM33B	147A
ZMZ205	135A
ZN7400E	7400
ZN7400F	7400
ZN7401E	7401
ZN7401F	7401
ZN7402E	7402
ZN7402F	7402
ZN7403E	7403
ZN7403J	7403
ZN7404E	7404
ZN7405E	7405
ZN7408E	7408
ZN7408J	7408
ZN7409E	7409
ZN7409J	7409
ZN7410E	7410
ZN7410F	7410
ZN7412E	7412
ZN7412J	7412
ZN7420E	7420
ZN7420F	7420
ZN7425E	7425
ZN7425J	7425
ZN7427E	7427
ZN7427J	7427
ZN7428E	7428
ZN7428J	7428
ZN7430E	7430
ZN7430F	7430
ZN7432E	7432
ZN7432J	7432
ZN7437E	7437
ZN7437J	7437
ZN7438E	7438
ZN7438J	7438
ZN7440E	7440
ZN7440F	7440
ZN7441AE	7441
ZN7442J	7442
ZN7450E	7450
ZN7450F	7450
ZN7451E	7451
ZN7451F	7451
ZN7453E	7453
ZN7453F	7453
ZN7454E	7454
ZN7454F	7454
ZN7460E	7460
ZN7460F	7460
ZN7470E	7470
ZN7470F	7470
ZN7472E	7472
ZN7472F	7472
ZN7473E	7473
ZN7473F	7473
ZN7474E	7474
ZN7474F	7474
ZN7475E	7475
ZN7476E	7476
ZN7486E	7486
ZN7486J	7486
ZN7490E	7490
ZN7490F	7490
ZN7492AE	7492
ZN7492AJ	7492
ZN7492E	7492
ZN7492F	7492
ZN7493AE	7493A
ZN7493AJ	7493A
ZN7493E	7493A
ZN7493F	7493A
ZN74107E	74107
ZN 35024712	197
ZN350504111	198
ZN37001003	1047
ZN37002001	1046
ZN37003008	738
ZN37004002	1050
ZN37011002	749
ZN-35024712	197
ZN-35050412	198
ZN-35050511	198
ZN-35062712	198
ZNM442E	7442
ZNR10K241U	2V150
ZO-12	142A
ZO-12A	142A
ZO-12B	142A
ZO-15	145A
ZO-15A	145A
ZO-15AC	145A
ZO-15B	145A
ZO-15BY	145A
ZO-27	146A
ZO-27A	146A
ZO-27B	146A
ZO-33	147A
ZO-33A	147A
ZO-33B	147A
ZO-62	149A
ZO-62A	149A
ZO-62B	149A
ZO-82	150A
ZO-82A	150A
ZO-82B	150A
ZO-110	151A
ZO-110A	151A
ZO-110B	151A
ZOA2.4	5000A
ZOA2.7	5002A
ZOB3.6	134A
ZOB5.1	135A
ZOB5.6	136A
ZOB6.2	137A
ZOB12	142A
ZOB15	145A
ZOB20	5079A
ZOB27	146A
ZOB27B	146A
ZOB33	147A
ZOB62	149A
ZOB82	150A
ZOB110	151A
ZOB-15	145A
ZOD6.2	137A
ZOD6.8	5071A
ZOD15	145A
ZOD18	5027A
ZOD27	146A
ZOD33	147A
ZOD62	149A
ZOD82	150A
ZOD110	151A
ZOD-15	145A
ZP2.7	5002A
ZP3.3	5005A
ZP3.8	5071A
ZP3.9	5007A
ZP4.3	5068A
ZP4.7	5009A
ZP5.1	135A
ZP5.6	136A
ZP6.2	137A
ZP6.8	5014A
ZP8.2	5072A
ZP9.1	139A
ZP9.1A	139A
ZP9.1B	139A
ZP10	140A
ZP12	142A
ZP12A	142A
ZP12B	142A
ZP15	145A
ZP15A	145A
ZP15B	145A
ZP16	5075A
ZP18	5027A
ZP20	5079A
ZP22	5030A
ZP27	146A
ZP27A	146A
ZP27B	146A
ZP33	147A
ZP33A	147A
ZP33B	147A
ZP62	149A
ZP62A	149A
ZP62B	149A
ZP82	150A
ZP82A	150A
ZP82B	150A
ZP110	151A
ZP110A	151A
ZP110B	151A
ZP-15	145A
ZP-15A	145A
ZP-15B	145A
ZPD2.7	5002A
ZPD3	5004A
ZPD3.0	5004A
ZPD3.3	5005A
ZPD3.6	5006A
ZPD3.9	6007A
ZPD4.3	5008A
ZPD4.3V	5008A
ZPD4.7	5009A
ZPD5.1	5010A
ZPD5.6	5011A
ZPD6.2	5013A
ZPD6.8	5014A
ZPD8.2	5016A
ZPD9.1	5018A
ZPD12	5021A
ZPD13	5022A
ZPD15	5024A
ZPD20	5029A
ZPD27	5033A
ZPD30	5035A
ZPD33	5036A
ZPD36	5037A
ZPD39	5038A
ZPD43	5039A
ZPD47	5040A
ZPD51	5041A
ZPD618	5071A
ZPFAK-50701	2732A
ZPFAK-50801	2732A
ZPFAK-50901	2732A
ZPFAK-51001	2732A
ZPU100	5096A
ZPU150	5100A
ZPU180	5103A
ZPY4.3	5068A
ZPY4.7	5069A
ZPY5.1	135A
ZPY5.6	136A
ZPY6.2	137A
ZPY6.8	5071A
ZPY7.5	138A
ZPY8.2	5072A
ZPY9.1	139A
ZPY10	140A
ZPY11	5074A
ZPY12	142A
ZPY13	143A
ZPY15	145A
ZPY16	5075A
ZPY18	5077A
ZPY20	5079A
ZPY22	5080A
ZPY24	5081A
ZPY27	146A
ZPY30	5084A
ZPY33	147A
ZPY36	5085A
ZPY39	5086A
ZPY43	5087A
ZPY47	5088A
ZPY51	5089A
ZPY56	5090A
ZPY62	149A
ZPY68	5092A
ZPY75	5093A
ZPY82	150A
ZPY91	5095A
ZPY100	5096A
ZQ9.1	139A
ZQ9.1A	139A
ZQ9.1B	139A
ZQ12	142A
ZQ12A	142A
ZQ12B	142A
ZQ15	145A
ZQ15A	145A
ZQ15B	145A
ZQ15X	145A
ZQ27	146A
ZQ27A	146A
ZQ27B	146A
ZQ33	147A
ZQ33A	147A
ZQ33B	147A
ZQ62	149A
ZQ62A	149A
ZQ62B	149A
ZQ82	150A
ZQ82A	150A
ZQ82B	150A
ZQ110	151A
ZQ110A	151A
ZQ110B	151A
ZQ-6	5070A
ZQ-15	145A
ZQ-15A	145A
ZQ-15B	145A
ZQ-108-01	712
ZR10	5800
ZR11	5801
ZR12	5802
ZR13	5804
ZR14	5804
ZR15	116
ZR20	5940
ZR21	5944
ZR22	5944
ZR50B793-1	142A
ZR50B793-3	146A
ZR50B849-1	146A
ZR50B921-1	146A
ZR50B921-2	138A
ZR50B921-3	145A
ZR50B921-10	5084A
ZR51B071-1	5137A
ZR51B071-2	5130A
ZR51B155-2	5130A
ZR51B155-5	5139A
ZR60	116
ZR61	116
ZR62	116
ZR63	116
ZR64	116
ZR66	116
ZR68	156
ZR200	5870
ZR201	5872
ZR202	5874
ZR203	134A
ZR204	5878
ZR205	136A
ZR206	5882
ZR207	138A
ZR208	5886
ZR209	5073A
ZR209T1	5073A
ZR209T3	5073A
ZR210	5073A
ZR212	142A
ZR215	5075A
ZR220	5079A
ZR225	5082A
ZR230	5084A
ZR235	5085A
ZR240	5087A
ZR500	116
ZR590	116
ZR590A	116
ZR601	5801
ZR602	5802
ZR604	5804
ZR606	5806
ZR608	156
ZR1025	116
ZR1031	116
ZR1035	116
ZR1076	116
ZR3470CN	3470
ZR50921-1	5081A
ZR50921-2	5071A
ZR518071-2	5130A
ZR518071-3	5142A
ZR-10B	116
ZR-61	116
ZR-63	116
ZR-500	116
ZR-590	116
ZR-590A	116
ZR-1025	116
ZR-1031	116
ZR-1035	116
ZR-1076	116
ZRB51B155-1	5137A
ZRB51B254-1	5084A
ZRB921-4	146A
ZS4F	177
ZS5.6	136A
ZS5.6A	136A
ZS5.6B	136A
ZS7	116
ZS8	116
ZS9.1	139A
ZS9.1A	139A
ZS9.1B	139A
ZS10A	116
ZS10B	116
ZS12	142A
ZS12A	142A
ZS12B	142A
ZS15	145A
ZS15A	145A
ZS15B	145A
ZS20A	116
ZS20B	116
ZS21	116
ZS22	116
ZS23	116
ZS24	116
ZS25	116
ZS27	146A
ZS27A	146A
ZS27B	146A
ZS30	116
ZS30A	116
ZS30B	116
ZS31	116
ZS31A	116
ZS31B	116
ZS32	116
ZS32A	116
ZS32B	116
ZS33	147A
ZS33A	147A
ZS33B	147A
ZS34	116
ZS34A	116
ZS34B	116
ZS38	158
ZS40	177
ZS50	116
ZS51	116
ZS52	116
ZS53	116
ZS56	158
ZS60	5091A
ZS62	149A
ZS62A	149A
ZS62B	149A
ZS70	116
ZS71	116
ZS72	116
ZS73	116
ZS74	116
ZS74B	116
ZS76	116
ZS78	125
ZS78A	125
ZS78B	125
ZS82	150A
ZS82A	150A
ZS82B	150A
ZS90	116
ZS91	116
ZS92	116
ZS94	116
ZS100	116
ZS101	116
ZS102	116
ZS103	116
ZS104	116
ZS108	116
ZS110	151A
ZS110A	151A
ZS110B	151A
ZS120	116
ZS121	116
ZS122	116
ZS123	116
ZS124	116
ZS142	177
ZS173	116
ZS174	116
ZS174B	116
ZS270	5800
ZS271	5801
ZS272	5802
ZS274	5804
ZS276	5806
ZS278	156
ZS701	5802
ZS702	5802
ZS-10B	116
ZS-15A	145A
ZS-15B	145A
ZS-20A	116
ZS-20B	116
ZS-21	116
ZS-23	116
ZS-24	116
ZS-25	116
ZS-30A	116
ZS-30B	116
ZS-31A	116
ZS-31B	116
ZS-32A	116
ZS-32B	116
ZS-33A	116
ZS-33B	116
ZS-34A	116
ZS-34B	116
ZS-50	116
ZS-52	116
ZS-53	116
ZS-71	116
ZS-73	116
ZSC535B	108
ZSD235Y	196
ZSF88.2	5072A
ZT5.6	136A
ZT5.6A	136A
ZT5.6B	136A
ZT6.2	137A
ZT6.2A	137A
ZT6.2B	137A
ZT9.1	139A
ZT9.1A	139A
ZT9.1B	139A
ZT12	142A
ZT12A	142A
ZT12B	142A
ZT15	145A
ZT15A	145A
ZT15B	145A
ZT20	123AP
ZT20-1	123AP
ZT20-12	123AP
ZT20-55	123AP
ZT20A	123AP
ZT20B	123AP
ZT20C	123AP
ZT21	123AP
ZT21-1	123AP
ZT21-12	123AP
ZT21-55	123AP
ZT21A	123AP
ZT21B	123AP
ZT21C	123AP
ZT22	123AP
ZT22-1	123AP
ZT22-12	123AP
ZT22-55	123AP
ZT22A	123AP
ZT22B	123AP
ZT22C	123AP
ZT23	123AP
ZT23-1	123AP
ZT23-12	123AP
ZT23A	123AP
ZT23B	123AP
ZT23C	123AP
ZT24	123AP
ZT24-1	123AP
ZT24-12	123AP
ZT24-55	123AP
ZT24A	123AP
ZT24B	123AP
ZT24C	123AP
ZT27	146A
ZT27A	146A
ZT27B	146A
ZT33	147A
ZT33A	147A
ZT33B	147A
ZT40	123AP
ZT41	123AP
ZT42	123AP
ZT43	123AP
ZT44	123AP
ZT50	123AP
ZT60	123AP
ZT60-1	123AP
ZT60-12	123AP
ZT60-55	123AP
ZT60A	123AP
ZT60B	123AP
ZT60C	123AP
ZT61	123AP
ZT61-1	123AP
ZT61-12	123AP
ZT61-55	123AP
ZT61A	123AP
ZT61B	123AP
ZT61C	123AP
ZT62	149A
ZT62-1	123AP
ZT62-12	123AP
ZT62-15	123AP
ZT62A	149A
ZT62B	149A
ZT62C	123AP
ZT63	123AP
ZT63-1	123AP
ZT63-12	123AP
ZT63-55	123AP
ZT63A	123AP
ZT63B	123AP
ZT63C	123AP
ZT64	123AP
ZT64-1	123AP
ZT64-5	123AP
ZT64-12	123AP
ZT64-55	123AP
ZT64A	123AP
ZT64B	123AP
ZT64C	123AP
ZT66	123AP
ZT66A	128
ZT66B	128
ZT66C	128
ZT68	123AP
ZT80	123AP
ZT81	123AP
ZT82	149A
ZT82(TRANS)	123AP
ZT82A	149A
ZT82B	149A
ZT83	123AP
ZT84	123AP
ZT86	123AP
ZT87	123AP
ZT88	123AP
ZT89	123AP
ZT90	128
ZT93	128
ZT94	128
ZT110	151A
ZT110A	151A
ZT110B	151A
ZT111	123AP
ZT112	123AP
ZT113	123AP
ZT114	123AP
ZT116	123AP
ZT117	123AP
ZT118	123AP
ZT119	123AP
ZT131	159
ZT131A	159
ZT152	159
ZT152A	159
ZT153	159
ZT153A	159
ZT154	159
ZT154A	159
ZT180	159
ZT180A	159
ZT181	159
ZT181A	159
ZT182	159
ZT182A	159
ZT183	159
ZT183A	159
ZT184	159
ZT184A	159
ZT187	159
ZT187A	159
ZT189	159
ZT190	128
ZT191	128
ZT192	128

PART NUMBER	NTE REPLACEMENT
ZT193	128
ZT202	123AP
ZT203	123AP
ZT204	123AP
ZT210	128
ZT211	128
ZT280	159
ZT280A	159
ZT281	159
ZT281A	159
ZT282	159
ZT282A	159
ZT283	159
ZT283A	159
ZT284	159
ZT284A	159
ZT286	129
ZT287	159
ZT287A	159
ZT323.55	123AP
ZT402	123AP
ZT403	123AP
ZT404	123AP
ZT406	123AP
ZT600	186
ZT696	123AP
ZT697	123AP
ZT706	123AP
ZT706A	123AP
ZT708	123AP
ZT709	108
ZT917	108
ZT918	108
ZT930	199
ZT1420	123AP
ZT1479	128
ZT1481	128
ZT1483	152
ZT1484	152
ZT1485	152
ZT1486	152
ZT1487	130
ZT1488	130
ZT1489	130
ZT1490	130
ZT1511	182
ZT1512	182
ZT1513	182
ZT1613	128
ZT1700	128
ZT1701	152
ZT1702	130
ZT1708	123AP
ZT1711	123AP
ZT2102	102
ZT2205	123AP
ZT2206	123AP
ZT2270	192
ZT2368	108
ZT2369	108
ZT2369A	108
ZT2475	108
ZT2476	123AP
ZT2477	123AP
ZT2708	108
ZT2857	108
ZT2876	152
ZT2938	108
ZT3053	192
ZT3269A	108
ZT3375	186
ZT3440	198
ZT3512	128
ZT3600	108
ZT3866	128
ZT-15	145A
ZT-15A	145A
ZT-15B	145A
ZT-62	123AP
ZT-82	123AP
ZT-110	123AP
ZTE5.1	5010A
ZTK33A	615P
ZTK33B	615
ZTK-33	147A
ZTR-1N60	109
ZTR-B54	102A
ZTR-B56	102A
ZTR-F0R2B	5402
ZTR-F0R2B	5402
ZTR-W06B	116
ZTR-W06B	116
ZTR-W06C	116
ZTX3IU	108
ZTX107	199
ZTX108	199
ZTX109	199
ZTX300	123AP
ZTX301	123AP
ZTX302	128
ZTX303	192
ZTX304	123AP
ZTX310	123AP
ZTX311	123AP
ZTX312	123AP
ZTX320	108
ZTX321	108
ZTX325	316
ZTX326	316
ZTX330	123AP
ZTX331	128
ZTX341	171
ZTX342	171
ZTX360	188
ZTX500	129
ZTX501	159
ZTX502	159
ZTX503	159
ZTX504	159
ZTX510	159
ZTX530	159
ZTX530A	159
ZTX530B	159
ZTX530C	159
ZTX530D	159
ZTX531	159
ZTX531A	159
ZTX531B	159
ZU12	142A
ZU12A	142A
ZU12B	142A
ZU15	145A
ZU15A	145A
ZU15B	145A
ZU27	146A
ZU27A	146A
ZU27B	146A
ZU33	147A
ZU33A	147A
ZU33B	147A
ZU62	149A
ZU62A	149A
ZU62B	149A
ZU82	150A
ZU82A	150A
ZU82B	150A
ZU110	151A
ZU110A	151A
ZU110B	151A
ZU-15	145A
ZU-15A	145A
ZU-15B	145A
ZV9.1	139A
ZV9.1A	139A
ZV9.1B	139A
ZV12	142A
ZV12A	142A
ZV12B	142A
ZV15	145A
ZV15A	145A
ZV15B	145A
ZV27	146A
ZV27A	146A
ZV27B	146A
ZV33	147A
ZV33A	147A
ZV33B	147A
ZV62	149A
ZV62A	149A
ZV62B	149A
ZV82	150A
ZV82A	150A
ZV82B	150A
ZV110	151A
ZV110A	151A
ZV110B	151A
ZV-15	145A
ZV-15A	145A
ZV-15B	145A
ZW0-9.1	139A
ZW2	116
ZW2.7	5063A
ZW3.3	5066A
ZW9.1	139A
ZX070	138A
ZX9.1	139A
ZXL-14	144A
ZXY14B	144A
ZXY-14	144A
ZY12	142A
ZY12A	142A
ZY12B	142A
ZY15	145A
ZY15A	145A
ZY15B	145A
ZY27	146A
ZY27A	146A
ZY27B	146A
ZY33	147A
ZY33A	147A
ZY33B	147A
ZY62	149A
ZY62A	149A
ZY62B	149A
ZY82	150A
ZY82A	150A
ZY82B	150A
ZY110	151A
ZY110A	151A
ZY110B	151A
ZY-15	145A
ZY-15A	145A
ZY-15B	145A
ZZ3.3	5005A
ZZ3.6	134A
ZZ3.9	134A
ZZ4.1	135A
ZZ4.7	135A
ZZ5.1	135A
ZZ5.6	136A
ZZ6.2	137A
ZZ6.8	5014A
ZZ8.2	5016A
ZZ9.1	139A
ZZ10	140A
ZZ12	142A
ZZ15	145A
ZZ18	5027A
ZZ22	5030A
ZZ27	146A
ZZ33	147A
ZZ62	149A
ZZ82	150A
ZZ110	151A
ZZ-15	145A
00000DS13	199
00000DS18	116
00000DS131	116
00000DS410	177
00000DS-38	125
00000FR202	116
00000MZ206	136A
00000S1B01	116
00000WZ090	139A
000000DG13	174
000000DS17	116
000000DS18	116
000000DS38	116
000000DS-38	116
000000SD1A	506
000000SD1AB	116
000000SD1AB(BOOST)	506
000000SD1Y	116
000000SD46	109
000000SV31	158
000000SZT8	138A
000001S188	109
000001S330	135A
000001S331	5070A
000001S334	139A
000001S553	614
000001S990	177
000002SB22	102A
0000000FR1	116
0000000FR2	116
0000000FRI	116
0000000MV4	117
0000000S15	116
0000000SD1	116
0000001N60	109
0000001S85	109
0000010DC1	116
0000010D1	116
0000015330A	5010A
0000-0100	290A
0000-00011-050	184
0000-00011-046	177
0000-00011-049	123A
0000-00011-054	312
0000-00011-055	312
0000-0070	187A
0000-0071	187A
0000-0140	290A
0000-0150	290A
0000-04	123AP
0000-0141	290A
0000DS410	177
0000DS410R	177
0000FR202	116
0000HA1306	1029
0000LA1201	1003
0000LA1201B	1003
0000LA3301	1006
0000RS1542	116
0000SD1	109
0000SD46	109
0000SD-1AUF	177
0000WZ090	139A
040001	107
080001	126
003002	109
080003	102A
000704	123AP
080004	102A
080006	108
003007	116
003008	177
0300005	102A
0300006	103A
0300008B	102A
0800039	519
08000001	519
08000015	519
08000016	156
08000017	5802
08000018	519
08000022	125
08000028	519
08000039	519
08000040	587
08000044	116
08000048	116
00200118	116
04000655-1	519
00001N60	109
00001S155	177
00001S188	109
00001S188AM	109
00001S330A	5010A
00001S334	139A
00001S446D	109
00001S1210	177
00001S1555	177
00001S1849	116
00001S1849R	116
00001S2076	177
00001S4460	109
000010DC1R	116
0000101	126
0000102	126
0000103	102A
0000104	102A
00001201	1003
00002S606	107
00002SA10	160
00002SA101	126
00002SA202	102A
00002SA550	159
00002SA609	159
00002SB22	102A
00002SB185	102A
00002SB185-0	102A
00002SB186	102A
00002SB186-0	102A
00002SB187	102A
00002SB303	102A
00002SB303-0	102A
00002SB405	158
00002SB405R	158
00002SB435	153
00002SB460	107
00002SB474	226
00002SB481	131MP
00002SB492	176
00002SB968	123AP
00002SC373	123A
00002SC460	107
00002SC460A	108
00002SC460B	108
00002SC460C	108
00002SC461	108
00002SC492	176
00002SC535	107
00002SC536	199
00002SC537	123A
00002SC606	108
00002SC609	195A
00002SC644	199
00002SC668	108
00002SC735	123A
00002SC772	107
00002SC828	123A
00002SC829	107
00002SC838	123AP
00002SC858	199
00002SC870	123A
00002SC870A	123A
00002SC870B	123A
00002SC870C	123A
00002SC929	199
00002SC930	199
00002SC945	289
00002SC968	123
00002SC1023	123AP
00002SC1026	161
00002SC1032	161
00002SC1061	196
00002SD235	152
00002SD261	192
000062	129
000071090	131
000071120	187
000071130	187A
000071131	187A
000071150	159
000071151	159
000072020	116
000072050	116
000072090	109
000072130	177
000072150	139A
000072160	109
000072180	5072A
000072190	139A
000073070	199
000073080	199
000073090	123A
000073100	123A
000073110	128
000073120	123A
000073130	123A
000073140	229
000073230	123A
000073231	123A
000073280	186
000073290	123A
000073300	192
000073301	192
000073302	192
000073303	192
000073305	192
000073310	123A
000073320	186
000073332	123A
000073333	123A
000073350	199
000073351	199
000073360	199
000073361	199
000073370	123AP
000073373	199
000073374	199
000073380	186
000073381	186A
000073390	123A
000073391	123A
000074010	1006
000074020	1045
000074030	1142
0300	116
03500	109
0400	116
0200	5944
0100	116
09800	159
09500	199
0700	116
0500	177
000-04	123A
09800-12	129
09800C	290
000HA1306U	1029
000LA1201	1003
000LA1201B	1003
000LA1306U	1029
000LA3300	1005
000LA3301	1006
000LD1020A	1012
0700NR14-3	2V420
0700NR20-4	524V42
000RS1542	116
000SD-1AUF	177
000WG1010	177
0100ZR07-1	1V060
0100ZR14-3	2V060
043001	108
041001	290
036001	703
081001	102A
084001	159
057001	109
084001C	121
057001H	109
085002	109
014002-1	177
087003	102A
085003	177
085004	109
085005	110MP
075005	109
057005	109
057005H	109
085006	109
082006	123AP
014007-1	519
014007-2	519
0310002	176
0440002-003	128
0510006	116
0620014	558
0320031	123AP
0320051	154
0320064	289
0620076	503
0510079	160
0510079H	160
0610083	290A
0610084	290A
0620089	605A
0630090	1471
0620090	125
0620091	5092A
06400001	5404
06200001	109
06200002	109
06400002	230
06200003	109
06500004	605A
06200005	125
06300005	1046
06100007	292
06100008	292
06200009	125
06300009	712
06200010	506
06200011	5092A
06200012	5014A
06200013	519
06200014	552
06200015	177
06100015	290A
06100016	290A
06200017	109
06200030	506
06100030	288
06300031	1550
06200032	5074A
06100033	153
06300034	1416
06100034	159
06100035	290A
06200038	506
06200039	116
08200040	1434
02600043	109
08200043	960
06200044	519
08200045	950
06200045	109
06200046	605A
06200047	601
06100047	290
06200048	519
08200050	1903
06200050	506
06300050	1532
06200051	125
06200052	116
06100053	234
06300054	1195
06200055	137A
06200056	144A
06200057	5071A
06300058	1548
06200058	142A
06100058	288
06200059	145A
06200060	116
06200061	552
06100061	234
06200062	116
06100062	290
08200064	1903
06200065	5801
06300066	1522
08200069	977
06200071	116
06200072	552
06200073	519
06200076	503
06100076	398
06300080	1471
06100081	290A
06100082	290A
06200083	5012A
06100083	290A
06200084	5020A
06100084	290A
06200085	5018A
06100085	290A
06100086	290A
06200088	552
06200089	605A
06100089	398
06300090	1471
06200090	580
08200091	943M
06200091	5092A
08200093	1934X
06200095	109
06100095	290A
06200096	109
06200100	552
06200102	552
06200103	552
06200104	552
06200105	552
06200106	506
06200107	125
06200108	5013A
06200109	558
06300111	1719
06200112	5013A
06200113	5018A
06300113	1725
06200114	5020A
06200115	177
06300115	1650
06200116	177
06200117	177
06200118	116
06200119	116
06300120	712
06200120	525
06200121	503
06200122	552
06200123	552
06200124	116
06200127	142A
06200130	519
06200131	5074A
06100131	2331
06200149	5020A
06200150	519
06300154	15018
06200159	552
06200164	5011A
06200167	519
06200168	142A
06200170	125
06200177	5020A
06200179	519
06200181	552
06200182	552
06200183	552
06200186	109
06200189	552
06300191	4053B
06300192	4053B
06200194	5074A
06200202	552
06200203	552
06200206	5020A
06200207	552
06200211	552
06200226	519
06200228	5020A
06200229	116
06200230	552
06200231	552
06200232	552
06200233	5020A
06300248	74LS04
06200263	580
06200288	552
06300311	829
06300334	1792
06300342	960
06300357	1728
06300359	1845
06300360	1773
06300403	15040
06300440	3041
06300491	1797
06300574	1845
06300616	1728
06300629	1777
06300761	859
06300763	7010
06300766	1685
06300767	1781
062000131	109
0500100F	5567
0001S49	116
0001S188	109
0001S188AM	109
0001S188FM	109
0001S334	139A
0001S2144Z	177
030010	123AP
030010-1	123AP
030011	128
030011-1	128
030011-2	128
003015	116
003016	109
003017	519
0600105	552
008010028	519
0300111008	109
0300111010	177
03002	181
05002GOF	5567
0500200F	5567
0002SB186-0	102A
0002SB187	102A
0002SB187(RED)	102A
0002SB303-0	102A
0002SB405	158
0002SB405R	158
0002SB1860	102
0002SB3030	102A
0002SC373	123A
0002SC373W	199
0002SC458B	123A
0002SC458C	123AP
0002SC531F	123AP
0002SC537F	123AP
0002SC644R	199
0002SC644S	199
0002SC644S,R,Q	199
0002SC668D	108
0002SC710B	123AP
0002SC710C	123AP
0002SC772C	107
0002SC828	123AP
0002SC828H	123AP
0002SC828Q	123AP
0002SC930D	199
0002SC930E	199
0002SC945Q	199
0002SC968P	128
0002SC1023	107
0002SC1026	107
0002SC1026A	107
0002SC1026B	107
0002SC1026C	107
0002SC1032	107
0002SC1032A	107
0002SC1032B	107
0002SC1032C	107
0002SC1061	152
0002SC1061A	152
0002SC1061B	152
0002SC1061C	152
0002SC1162	184
0002SC1317	123AP
0002SC1383	128
080021	108
080022	108
003023	116
080023	108
080026	160
080027	160
080028	160
080020029	5013A
0003-009700	142A
05003GOF	5568
0500300F	5568
0300313013	5021A
0004-003500	116
05004GOF	5568
0500400F	5568
080040	116
080041	108
080042	108
080043	102A
080047	102A
040048	226
080048	121
09005	703
05005GOF	5568
0500500F	5568
080050	116
080052	102A
080059	108
0500500F	5568
09006	703
05006GOF	5568
0500600F	5568
080060	108
080061	160
05007GOF	5569
0500700F	5569
080071	160
080072	126
080073	102A
03008-1	123A
05008GOF	5569
0500800F	5569
05009GOF	5569
0500900F	5569
07009502	290A
0300919026	116
09010	746
0010-0041	292
0010-0180	398
05010GOF	5569

PART NUMBER	NTE REPLACEMENT
05010OOF	5569
003102	139A
003101402	109
003104021	109
0031013002	229
0031013007	229
0031013010	123AP
0031013017	187A
0031013019	193
0031013022	123AP
0031013026	192
0031013027	287
0031013029	229
0031013031	159
0031013045	123AP
0031013047	198
0031013048	287
0031013049	123AP
0031013050	159
0031013051	123AP
0031013052	159
0031013053	229
0031013056	229
0031013063	123AP
0031013064	187A
0031013065	193
0031013066	379
0031013067	186A
0031014003	552
0031014007	506
0031014008	116
0081014009	5015A
0031014009	5015A
0031014013	177
0031014014	5010A
0031014021	109
0031014022	177
0031014024	116
0031014029	519
0031014030	552
0031015010	712
0031015012	712
00310013044	376
003101014008	116
000157GN	109
000188-4	175
000188GN	109
0001849	116
0001849R	116
000192-3	175
0020-0800	198
0020-0190	85
0020-0220	186A
0020-0250	289A
0020-0330	85
0020-0350	229
0020-0360	107
0020-0402	85
0020-0403	85
0020-0404	85
0020-0420	399
0020-0540	399
0020-0630	85
0020-0801	198
0020-0191	85
0020-0193	85
0020-0221	107
0020-0271	289A
0020-0381	85
0020-0411	85
0020-0432	107
0020-0451	85
0020-0541	399
0020-0643	157
0020-0761	198
080206	126
0012060	109
08020007	137A
08020020	5079A
08020022	5082A
08020025	116
08020028	5022A
08020029	5013A
08020030	5009A
08020033	5014A
08020036	5002A
08020037	5081A
08020040	5006A
08020052	147A
08020054	146A
08020056	5019A
08020067	5008A
08020075	5009A
030200112	312
0032013045	123AP
00023645	123AP
0030-0060	152
0030-0091	291
0030-0370	89
0030-0161	375
003307	519
08030002	552
08030003	6246
0063050118	116
0404011-001	9937
0404012-001	9949
0044028-014	123A
0044028-14	123A
04040501-1	909D
04040503-1	910
04040505	941D
04040505-001	941D
04040751-001	923D
0004201	102A
0004202	102A
0004203	131
08050	116
0050-0300	519
0050-0020	5009A
0050-0050	600
0050-0070	519
0050-0080	552
0050-0090	552
0050-0011	109
0050-0024	110MP
0050-0031	109
0050-0033	109
0050-0130	519
0050-0250	519
0050-0301	519
0050-0302	519
003501	1003
000546-1	123AP
000583954	5994
000653	123AP
05070	174
0070-0210	1616
0207046	1108
0048000	102A
0069000	56010
00	199
00HA1306P-U	1029
00HA1306PU	1029
001	6400
001(MCINTOSH)	726
001(UMI)	8098
001-0000-00	109
001-002050	129
001-02010	158
001-0010-00	109
001-02020	123AP
001-0020-00	110MP
001-0020-0	109
001-0020-02	1087
001-00	123AP
001-007-00	116
001-02011	123
001-0022-00	109
001-0072-00	125
001-0072-00(MUNTZ)	113A
001-0077-00	116
001-0081	109
001-0081-00	117
001-0082-00	5071A
001-0085-00	614
001-0091	1140
001-0095-00	177
001-0095-02	519
001-0099-00	138A
001-0099-01	138A
001-0099-02	138A
001-02101-0	123AP
001-01101-0	101
001-0101-01	5073A
001-02101-1	123AP
001-021010	199
001-011010	101
001-021011	199
001-02102-0	123AP
001-021020	199
001-02103-0	123AP
001-021030	85
001-02104-0	123AP
001-021040	199
001-02105-0	123AP
001-021050	199
001-02106-0	123AP
001-021060	199
001-02107-0	123AP
001-021070	199
001-02108-0	123AP
001-021080	199
001-02109-0	123AP
001-021090	199
001-02110	123
001-02110-0	123AP
001-021100	289
001-021101	85
001-021200	130
001-0130-00	613
001-0130-01	614
001-021300	154
001-02150	85
001-0160-00	614
001-02190	128
001-02201-0	159
001-022010	129
001-012010	102
001-012011	102
001-01202-1	100
001-022020	159
001-012020	100
001-022021	159
001-012021	158
001-022022	159
001-022023	159
001-01203-1	100
001-022030	192A
001-012030	102
001-022031	192A
001-012031	102
001-022032	159
001-01204	105
001-01204-0	104
001-022040	4000
001-012040	104
001-01205-0	104
001-01205-1	104
001-022050	153
001-012050	121
001-012051	104
001-012052	179
001-012053	179
001-01206-0	102
001-022060	397
001-012060	102
001-022070	281
001-022080	292
001-022082	197
001-022090	292
001-022103	232
001-01250	121
001-023020	5181A
001-023021	5198A
001-023027	146A
001-02303-0	135A
001-02303-3	137A
001-02303-4	145A
001-023030	5069A
001-023031	5080A
001-023032	5079A
001-023033	136A
001-023034	145A
001-023035	140A
001-023036	5069A
001-023037	142A
001-023038	5075A
001-023041	5130A
001-023042	5120A
001-024010	116
001-024020	117
001-024030	117
001-024040	5994
001-02405-0	116
001-02405-1	116
001-02405-2	116
001-024050	116
001-024051	116
001-024052	116
001-02406-0	156
001-02406-1	156
001-024060	5994
001-024061	156
001-024070	5980
001-024080	85
001-01501-0	109
001-015010	109
001-015011	109
001-02601-0	116
001-026010	519
001-02603-0	116
001-026030	177
001-026050	6402
001-026060	177
001-02701-1	133
001-027010	132
001-02702-0	133
001-027020	132
001-02703-0	312
001-027030	132
001-02	159
001-03	159
001-04	159
001-028-000	909
001-0112-00	519
001-0125-00	177
001-0127-00	140A
001-0151-00	177
001-0151-01	177
001-0152-00	5072A
001-0153-00	116
001-0161-00	5072A
001-0163-02	135A
001-0163-04	136A
001-0163-10	5015A
001-0163-13	5017A
001-0163-15	139A
001-0176-00	614
001-01251	121
001-01252	104
001-01253	104
001-01254	121
001-01255	121
001-01256	121
001-01257	121
001-01258	121
001-01259	121
001-02111	123
001-02111-0	123AP
001-02111-1	123AP
001-021110	123
001-021111	123
001-02113-2	123AP
001-02113-3	123AP
001-02113-4	123AP
001-02113-5	123AP
001-021130	85
001-021131	85
001-021132	199
001-021133	199
001-021134	199
001-021135	199
001-021136	199
001-02114-0	198
001-021140	396
001-02115-0	124
001-021150	175
001-021151	175
001-02116-0	124
001-021160	124
001-021161	124
001-021162	124
001-021163	124
001-02117-2	193
001-021170	159
001-021171	159
001-021172	159
001-021173	159
001-02118	123A
001-021180	130
001-02119-0	128
001-021190	128
001-02121-0	123AP
001-021210	85
001-021211	123A
001-021218	289
001-021230	123AP
001-021231	289
001-021232	123AP
001-021240	186
001-021260	199
001-021260-0	199
001-021261	159
001-021270	130
001-021270-001	130
001-021270-1	130
001-021280	181
001-021290	181
001-02131	123AP
001-021314	199
001-021320	152
001-021321	152
001-021322	152
001-021330	196
001-021340	287
001-021341	287
001-021350	46
001-021360	263
001-021382	270
001-022114	159
001-022121	159
001-0221201	159
001-022130	264
001-022152	271
001-044272-002	289
001-044272-0	85
001-044273-002	128
001-044273-0	128
001-044274-0	175
001-044275	175
001-044275-002	128
001-044276	175
001-044277-002	116
001-044672-001	102A
001-044672-0	158
001-044673-001	102A
001-044673-0	158
001-044674-001	289
001-044676-001	519
001-044677-001	161
001-044677-0	85
001-044678-1	85
001-1	172A
001-533-00	159
001-21011	123AP
001-223027	146A
001-223034	145A
001-226010	519
001-226030	116
001B(MCINTOSH)	726
002(UMI)	8115
002-00900	160
002-007000	104
002-009000	160
002-012000	123
002-011000	102A
002-010100	121
002-007100	160
002-008100	104
002-009100	124
002-005100	102A
002-007200	160
002-008300	123AP
002-010300	159
002-006300	126
002-007300	102A
002-010300-6	129
002-010300A	159
002-00840	102
002-007400	160
002-008400	102A
002-010400	123AP
002-009500	123AP
002-006500	123
002-010500	159
002-010500A	159
002-009501	123AP
002-009502	123AP
002-009502-12	123
002-006600	102A
002-009600	108
002-010600	128
002-009601	108
002-009601-12	161
002-009700	104
002-010700	129
002-009701	121
002-010800	123AP
002-006800	102A
002-009800	159
002-008800	121
002-009800-12	129
002-009800A	290
002-010900	159
002-009900	123AP
002-006900	102A
002-010900A	159
002-0105-00	106
002-011400	161
002-011500	161
002-011600	126
002-011700	103A
002-011800	176
002-011900	102A
002-012100	185
002-012200	184
002-012300	153
002-012400	152
002-012500	128
002-012600	129
002-012700	121
002-012700-12	127
002-012800	159
002-012800A	159
002-03	123AP
002-1(SYLVANIA)	196
002-2(SYLVANIA)	196
002-3(SYLVANIA)	241
002-4(SYLVANIA)	196
002-104-000	199
002-9501	199
002-9502	199
002-9502-12	199
002-9601	108
002-9601-12	108
002-9700	121
002-9800-12	129
002-9800-A	159
002-11700	103A
002-11800	102A
002-11900	102A
002-12000	123AP
002D235RY	152
002SA203AA	126
002SB185AA	102A
002SB435RY	153
002SB18500	102A
002SC203	192
002SC203A	192
002SC203AA	126
002SC668D	107
002SC735-0Y	123AP
002SC7350Y	123AP
002SC1061	186
002SC1209C	297
002SC7350Y	289
002SD235RY	152
003	110MP
003(UMI)	8125
003-02000	110MP
003-00200	110MP
003-009000	109
003-010000	142A
003-009100	145A
003-004200	109
003-002200	113A
003-009200	142A
003-005400	109
003-009400	116
003-007500	110MP
003-009600	109
003-006700	109
003-009700	142A
003-009900	116
003-009900(AIRLINE)	506
003-001	116
003-0	5402
003-01	229
003-H03	102
003H03	102
004	1098
004(MCINTOSH)	725
004(TOYOTA)	1098
004(UMI)	8125
004-00900	177
004-002000	117
004-004000	116
004-003000	116
004-003000#	116
004-03300	116
004-03200	118
004-03600	116
004-03700	116
004-03500	116
004-004100	116
004-003200	118
004-009200	109
004-003300	116
004-003400	116
004-003500	506
004-003600	116
004-002700	116
004-003700	120
004-003700(SR-37)	120
004-002800	116
004-002900	113A
004-003900	116
004-00	123AP
004-001	179
004-0027-00	116
004-1	189
004-1A	129
004-2	196
004-8000	121
005(UMI)	8149
005-011000	522
005-010300	500A
005-010400	522
005-010800	522
005-010900	522
005-011200	522
005-012200	534
005-013600	531
005-02	123AP
005-1	291
006-0000004	519
006-0001003	154
006-0001011	154
006-0002034	5513
006-0002088	154
006-0000134	123AP
006-0000135	159
006-0000137A	130
006-0000146	7400
006-0000147	7410
006-0000151	7472
006-0000155A	102A
006-0000162	74107
006-000138B	181
006-0004270-001	909D
006-0004443	133
006-0004956	129
006-0005191	129
006-00055182	234
006-0006903	397
006-02	159
006-6400902	519
006-6450032	123AP
006B2M	722
007(UMI)	8181
007-0030	175
007-0040-00	130
007-00	171
007-009-00	726
007-0051	128
007-0051-00	128
007-0051-01	128
007-0072-00	181
007-0074	175
007-0150-00	818
007-023200	191
007-0112	152
007-0112-00	196
007-0112-03	152
007-0112-04	196
007-0112-05	152
007-0189-00	222
007-0197-00	5695
007-0214-00	133
007-0214-01	133
007-112-04	152
007-117-02	222
007-214-00	133
007-6016-00	519
007-6060-00	519
007-16687C1	911
007-25005-01	519
007-25013-01	519
007-25016-01	519
007-73203-01	102A
007-73401-02	160
007-74004-01	159
007-74008-01	159
007-74655-02	123AP
007-74655-06	123AP
007-74659-01	128
007-74659-04	128
007-74659-06	128
007-74661-01	123AP
007-166870I	911
007-1668601	910
007-1668602	910D
007-1669602	941M
007-1669901	923D
007-1671101	912
007-1695001	7400
007-1695101	7420
007-1695301	7404
007-1695701	7440
007-1695901	7410
007-1696001	7485
007-1696101	7414
007-1696201	7402
007-1696301	7437
007-1696701	7411
007-1696801	74145
007-1696901	7406
007-1697701	74180
007-1697801	7441
007-1698301	74192
007-1698401	74193
007-1698901	7450
007-1699201	7411
007-1699301	7408
007-1699401	7403
007-1699801	7474
007-7450301	130
007-7450301C	130
007-7466101	123AP
008-024-00	116
009-000	165
009-00	165
009-301003	102A
010-001	912
010-694	171
010-694(AMPEX)	154
05011GOF	5569
05010OOF	5569
080114	160
07011751	290A
07011752	290A
07011757	290A
0012-911	116
05012OOF	5569
0201201	1003
07012611	183
0301201115	85
0301201117	85
0301201134	199
0301201150	373
0301201163	107
0013-911	116
0014-911	177
0015-911	116
020156	100
09017	722
0018	123AP
09018	788
0018ZR07-1	1V010
0018ZR14-3	2V010
0019-003485	175
0019-003485A	290
0019-1313	1410
020-00030	109
020-00011	110MP
020-00012	110MP
020-00023	126
020-00024	107
020-00025	107
020-00026	108
020-00027	108
020-00028	107
020-00031	614
020-114-007	703
020-114-008	703
020-1110-004	106
020-1110-004(SCOTT)	159
020-1110-004C	159
020-1110-005	234
020-1110-005(SCOTT)	159
020-1110-005C	290
020-1110-006	160
020-1110-006(SCOTT)	160
020-1110-007(SCOTT)	129
020-1110-008	128
020-1110-008(SCOTT)	128
020-1110-009	129
020-1110-009(SCOTT)	129
020-1110-010	199
020-1110-010(SCOTT)	123AP
020-1110-011	123AP
020-1110-011(SCOTT)	123AP
020-1110-012	199
020-1110-012(SCOTT)	123AP
020-1110-013	199
020-1110-013(SCOTT)	123AP
020-1110-014	129
020-1110-014(SCOTT)	154
020-1110-015(SCOTT)	129
020-1110-016	133
020-1110-016(SCOTT)	133
020-1110-017	123AP
020-1110-017(SCOTT)	123AP
020-1110-018	133
020-1110-018(SCOTT)	133
020-1110-021	133
020-1110-022	133
020-1110-025	158
020-1110-025(SCOTT)	102A
020-1110-027	234
020-1110-038	194
020-1111-002	130
020-1111-002(SCOTT)	130
020-1111-003	162
020-1111-003(SCOTT)	130
020-1111-004	153
020-1111-004(SCOTT)	185
020-1111-005	152
020-1111-005(SCOTT)	184
020-1111-006(SCOTT)	179
020-1111-007	130
020-1111-007(SCOTT)	130
020-1111-008	130
020-1111-008(SCOTT)	130
020-1111-009	219
020-1111-009(SCOTT)	180
020-1111-010(SCOTT)	182
020-1111-080	219
020-1111-011(SCOTT)	183
020-1111-017	129
020-1111-018	128
020-1111-019	130
020-1111-038	128
020-1112-001	123AP
020-1112-001(SCOTT)	128
020-1112-002	312
020-1112-002(SCOTT)	132
020-1112-003	161
020-1112-004	107
020-1112-004(SCOTT)	123AP
020-1112-005	133
020-1112-006	132
020-1112-007	133
020-1112-008	133
020-1112-009	133
020-1114-003	725
020-1114-005	725
020-1114-007	703
020-1114-007(SCOTT)	703
020-1114-008	703
020-1114-008(SCOTT)	703
020-1114-013	725
020-1114-015	941M
020-1114-016	912
080224	126
080225	126
080228	126
080236	126

PART NUMBER	NTE REPLACEMENT
0024ZR07-1	1V014
0024ZR14-3	2V014
080244	160
080245	160
080253	126
030254	85
080258	160
080266	160
080267	160
080269	160
0027ZR07-1	1V017
0027ZR14-3	2V017
080274	126
080275	126
080276	126
080277	126
030	156
030-007-0	129
030-034-0	103A
0033ZR07-1	1V020
0033ZR14-3	2V020
0303452162	1206
0303452177	1206
0036-001	159
0039ZR07-1	1V025
0039ZR14-3	2V025
020425-3	196
020426-3	197
0043-004793	722
0047ZR07-1	1V030
0047ZR14-3	2V030
04049B	116
050-0011-00	116
050A1G0F	5567
050A100F	5567
050AAG0F	5567
050AA0OF	5567
050BBG0F	5567
050BB0OF	5567
0051-0400	5457
0051-0100	552
0051-0010	116
0051-0070	552
0051-0110	552
0051-0130	552
0051-0160	552
0051-0290	116
0051-0340	552
0051-0291	116
030512-1	123AP
030512-2	123AP
030515	123AP
030515-4	123AP
0052-0010	613
030527	123AP
04053	234
0053-030-51003	580
0053-030-61001	5801
0053-015-71100	5019A
0053-015-71919	5018A
0053-018-11001	177
0053-018-11002	519
0053-024-71001	112
0053-026-01002	580
0053-026-11001	552
0053-026-21001	125
0053-029-91002	587
0053-031-01001	580
0053-032-91629	5013T1
0053-033-71120	5021A
0053-033-71330	5036A
0053-033-71479	5009A
0053-033-71919	5018A
0053-901-30479	5009A
0053-901-50479	5009A
0053-901-50519	5010A
0053-901-71829	5016A
0053-909-00100	5018A
0053-912-00520	116
0053-915-00610	580
0053-915-00270	519
0053-919-00100	5018A
030531-1	105
030536	123AP
030536-1	123AP
030537	123AP
030537-1	123AP
030537-2	123AP
030538	123AP
030539-1	130
0054-0020	5009A
0054-0050	5014A
0054-0060	5015A
0054-0110	552
0054-0240	5021A
0054-0250	519
0054-0115	5020A
0054-0152	5036A
0054-0191	5010A
0054-0611	5033A
030542	123AP
030542-1	123AP
030543	123AP
030543-1	123AP
030543-2	123AP
030548	123AP
0055	129
0056ZR07-1	1V035
0056ZR14-3	2V035
010562	290
02057-1	185
01057-1	184
0061-015-80003	159
0061-022-40001	123AP
0061-022-49001	199
0061-043-49001	159
0061-043-59001	123AP
0061-043-59002	123AP
0061-044-00120	85
0061-044-00123	290A
0061-044-30001	48
0061-049-99001	123AP
0061-055-49001	399
0061-055-50002	2302
0061-232-70001	1566
0061-238-00001	4066B
0061-247-90001	960
0061-257-40001	1797
0061-258-60004	1777
0061-262-50001	1773
0061-900-05600	289A
0061-900-05200	54
0061-900-04412	107
0061-901-02160	153
0061-920-01330	1789
0061-920-60090	1674
0061-969-90130	977
0064-030XX-XXBP	116
02064-5A	248
01064-5A	247
0064-130XX-XXJX	5019A
0064-131XX-XXJX	5020A
0064-133XX-XXJX	5021A
0065-085XX-XXCX	130
0065-105XX-XXHX	199
0065-213XX-XXCX	123AP
0065-215XX-XXCX	159
0065-342XX-XXCX	219
0065-379XX-XXDX	263
0065-385XX-XXDX	378
0065-428XX-XXCX	123AP
0065-485XX-XXMX	152
0065-488XX-XXMX	153
0065-492XX-XXMX	261
0065-493XX-XXMX	262
0065-500XX-XXCX	262
0065-560XX-XXBX	377
0065-563XX-XXDX	268
0066-004BX-XXAX	956
0066-020BX-XXAX	834
0066-050XX-XXAX	955M
0066-012BX-XXAX	987
0066-022BX-XXAX	966
0066-034BX-XXAX	928M
0066-037BX-XXAX	990
0066-043DX-XXAX	1232
0066-065BX-XXAX	992
0066-068AX-XXCX	74LS138
0066-091BX-XXEX	4555B
0066-094BX-XXDX	829
0066-69AX-XXXX	74LS139
0066-100BX-XXDX	4024B
0066-104XX-XXAX	941M
0066-124BX-XX2X	3880
0066-131XE-XAAX	2114
0066-140AX-XXBX	74153
0066-145AX-XXBX	74154
0066-160AX-XXBX	74157
0066-161AX-XXBX	74LS157
0066-166AX-XXHX	74LS158
0066-180AX-XXHX	74161
0066-183AX-XXHX	74LS161A
0066-193AX-XXCX	74LS163A
0066-196AX-XXDX	74LS164
0066-209XX-XXDX	4008B
0066-214XX-XXDX	4013B
0066-218XX-XXBX	4016B
0066-228XE-XXDX	2104
0066-240AX-XXBX	74174
0066-243AX-XXBX	74LS174
0066-248AX-XXCX	74LS175
0066-260BX-XXCX	2013
0066-275XX-XXEX	4066B
0066-277XX-XXDX	4068B
0066-301XX-XXDX	4078B
0066-304XX-XXDX	4081B
0066-311XX-XXEX	4099B
0066-320XX-XXDX	40174B
0066-322XX-XXDX	40175B
0066-331XX-XXDX	4516B
0066-336XX-XXDX	4539B
0066-412XX-XXBX	6810
0066-417AX-XXBX	74LS194
0066-450XX-XXBX	7400
0066-453XX-XXAX	74LS00
0066-460XX-XXBX	7402
0066-463XX-XXXX	74LS02
0066-464AX-XXHX	74LS241
0066-467AX-XXHX	74LS244
0066-468AX-XXCX	74LS245
0066-470XX-XXBX	7404
0066-473XX-XXXX	74LS04
0066-480XX-XXBX	7406
0066-490XX-XXAX	7408
0066-493XX-XXXX	74LS08
0066-500XX-XXBX	7410
0066-502XX-XXBX	74LS10
0066-520XX-XXAX	7414
0066-521XX-XXAX	74LS14
0066-530XX-XXCX	7416
0066-550XX-XXBX	7420
0066-553XX-XXCX	74LS20
0066-575XX-XXAX	7425
0066-583AX-XXCX	74LS253
0066-585XX-XXAX	7427
0066-600XX-XXAX	7430
0066-603XX-XXHX	74LS30
0066-610XX-XXHX	7432
0066-611XX-XXXX	74LS32
0066-643AX-XXDX	74LS257
0066-645AX-XXDX	74LS259
0066-654AX-XXCX	74LS273
0066-658AX-XXAX	74LS283
0066-660XX-XXBX	7442
0066-661XX-XXCX	74LS42
0066-690XX-XXBX	7448
0066-700AX-XXBX	74LS367
0066-701AX-XXNX	74LS368
0066-717AX-XXBX	74LS374
0066-792AX-XXCX	966
0066-820XX-XXAX	7474
0066-821XX-XXCX	74S74
0066-823XX-XXDX	74LS74A
0066-827XX-XXNX	74LS75
0066-880XX-XXBX	7486
0066-883XX-XXDX	74LS86
0066-895XX-XX1X	7489
0066-915XX-XXBX	7493A
0066-985XX-XXBX	74107
0066-986XX-XXAX	74LS107
0068ZR07-1	1V040
0068ZR14-3	2V040
0069-108XX-XXWX	428
0069-109XX-XXWX	430
0069-131XX-XXGX	3047
070	130
070-001	160
070-003	110MP
070-004	125
070-005	125
070-006	125
070-007	125
070-008	125
070-009	125
070-010	125
070-020	100
070-030	125
070-011	140A
070-013	125
070-014	125
070-015	125
070-016	125
070-017	125
070-019	116
070-021	145A
070-022	177
070-024	140A
070-025	5093A
070-027	5809
070-028	125
070-031	156
070-032	125
070-033	125
070-035	156
070-036	5809
070-041	156
070-043	5809
070-047	177
070-048	5075A
070-049	5081A
0071-0030	1210
0207120	1087
0207205	1155
0073-0010	1003
0073-0180	1413
0079-0510	1538
0079-1313	1410
080	184
0081-0050	605A
030812-1	103A
0082ZR07-1	1V050
0082ZR14-3	2V050
030828	199
0086	148A
0087	146A
090A64-1	109
030930	229
0101	177
06101	85
0101-0060A	108
0101-0034	126
0101-0540	123AP
0101-0222	126
0101-0439	193
0101-0448	187
0101-0448A	187
0101-0465	185
0101-0466	187
0101-0491	123AP
0101-0531	108
0101-439	129
081018	102A
081019	102A
0102	116
06102	290A
0102-0371	102A
081026	158
081027	158
081029	158
0103	133
0103-00608	123AP
0103-0060	108
0103-0060(B)	123AP
0103-0060-6438	108
0103-0060A	123AP
0103-0060B	108
0103-014	123AP
0103-0014(R,S)	128
0103-0014/4460	123AP
0103-0014R	128
0103-0014S	128
0103-0014T	128
0103-0014U	128
0103-0051	128
0103-0088	123AP
0103-0088/4460	199
0103-0088H	123AP
0103-0088R	123AP
0103-0088S	123AP
0103-0503	128
0103-0503S	128
0103-0504	123AP
0103-0540	123AP
0103-0607	128
0103-052	161
0103-0191	108
0103-0389	108
0103-0419	186
0103-0419A	186
0103-0473	123AP
0103-0482	123AP
0103-0491	123AP
0103-0491-6438	123
0103-0491/4460	123AP
0103-0492	199
0103-0521	108
0103-0521(B)	123AP
0103-0521B	108
0103-0531	108
0103-0531-4460	123A
0103-0531-6438	123A
0103-0531/4460	107
0103-0568	107
0103-0568/4460	107
0103-0616	128
0103-90	116
0103-93	199
0103-94	123AP
0103-95	158
0103-389	108
0103-512M	186
0103-9531/4460	108
031033	109
031034	116
081038	102A
06104	199
0104-0013	128
0104-0013-6438	128
031040	109
081042	131MP
081046	102A
081047	102A
081048	102A
081049	102A
0105-0012	132
081050	102A
081056	102A
081059	158
06106	153
06107	290A
081077	128
07107071	197
07107951	254
06108	152
07108251	197
07108841	262
06109	158
0110	116
06110	234
0110-0011	116
0110-0209	116
0110-0209-6438	116
0110-0141	116
0110-0141-6438	116
0110-0141/4460	116
011103	113A
06110032	292
0011193	5072A
00113041	89
06120	291
041200-30110	177
06120001	154
06120003	152
06120005	85
06120006	85
06120008	199
06120009	229
06120012	283
06120015	107
06120018	152
06120021	152
06120025	85
06120026	107
06120028	287
06120030	152
06120041	376
06120053	157
06120063	289
06120073	108
06120083	376
06120085	233
06120087	85
06120088	375
06120091	375
06120096	123A
06120097	198
06120098	198
06120109	198
06120110	198
06120126	399
06120134	399
06120141	198
06120144	157
06120145	375
06120148	375
06120149	376
06120150	376
06120151	85
06120152	399
06120153	238
06120155	157
06120156	157
06120161	399
06120162	399
06120168	85
06120169	85
06120170	85
06120171	85
06120172	85
06120173	289A
06120174	289A
06120177	376
06120181	186A
06120182	186A
06120183	186A
06120186	198
06120187	198
06120200	157
06120202	375
06120204	85
06120207	375
06120208	389
06120212	382
06120217	399
06120218	399
06120220	376
06120221	376
06120229	123AP
06120230	123AP
06120240	85
06120253	290A
061200081	290A
0130	128
0613033	152
06130014	375
06130017	375
06130018	291
06130019	238
06130036	375
06130037	165
06130042	89
06130046	375
06130047	375
06130052	375
06130053	375
06130118	2302
06130134	2331
0140-5	199
0140-6	123AP
0140-7	186
0140-8	116
0140-9	116
001422	123AP
0150NR07-1	1V095
0150NR14-3	2V095
06150012	399
0015107	506
06160006	89
06160008	107
04170	166
0517022	109
06170028	2302
00192-6	175
0201	5944
0220100N	5562
012013-1	123AP
012015	128
082019	123AP
0220100N	5562
0220200N	5562
082020	233
082022	195A
082025	237
082028	289
082029	237
0220200N	5562
0820220	123AP
0220300N	5564
082033	195A
0220300N	5564
0220400N	5564
0220400N	5564
0205	722
0205(DYNACO)	722
0220500N	5566
0220500N	5566
05206-00	199
05206-0	199
0220600N	5566
0220600N	5566
022070	180
012085	175
012099-1	129
0210	5944
0621063	175
08210001	74LS00
08210002	74LS04
08210004	74LS42
08210006	7406
08210008	555M
08210017	74LS05
06210018	101
08210022	74LS93
08210023	74LS14
08210029	74LS138
08210030	74LS55
08210032	74LS08
08210033	74LS74A
08210038	74LS373
08210039	74LS157
08210040	74LS257
08210046	74LS139
08210047	75188
08210048	75189
08210050	74LS645
08210052	74LS374
08210053	74LS32
08210058	74LS11
08210059	74LS123
08210063	74LS22
08210064	74LS393
08210068	74LS365A
08210069	74LS244
08210070	74LS86
08210071	74LS151
08210072	74LS02
08210103	74LS06
0220	5944
0622035	5020A
0622070	116
08220014	2732A
06220021	552
06220022	5801
08220027	2128
08220030	2764
07220031	85
08220033	2764
08220047	21128
06220069	116
06220071	116
08220072	74LS42
08220092	834
06220120	5018A
06220167	519
06220168	5006A
06220227	5010A
06220228	5011A
06220233	5018A
06220235	5020A
06220242	5035A
0022481	131
00234-B	175
0023645	107
0023828	123AP
0023829	107
0250NR07-1	1V150
0250NR14-3	2V150
0250NR20-4	524V15
0525001	614
0525002	109
0525002H	109
0301	116
0301-3055-00	130
023010ON	5562
09301020	102A
09301027	158
0302	116
0230200N	5562
0230200N	5562
09303	199
0230300N	5564
0330302	142A
0304	116
0230400N	5564
0230400N	5564
09305	229
0230500N	5566
0230500N	5566
0230600N	5566
09306244	177
0307	125
07307741	382
09308004	703
09308038	1142
07308631	382
0310	116
023100N	5562
0531014	102A
0531015	102A
0531016	102A
01310131-0035	116
003111	139A
003113	135A
003114	142A
0320	116
05320023	123A
05320074	123A
05320074H	123AP
003449	229
003460	199
003461	199
0535001	109
0535005	109
003515	801
003516	1217
00351980	128
003522	1052
003526	1170
00352080	123AP
003542	7403
023606	312
0401	116
094013	179
0402	116
014024	519
0410	116
04410025-001	519
04410025-005	519
04410042-001	519
00415	159
0444028-010	123A
0444028-014	123A
04440028-001	123AP
04440028-002	123A
04440028-003	123AP
04440028-006	123AP
04440028-007	123A
04440028-008	123AP
04440028-013	123AP
04440032-002	159
04440032-003	159
04440032-004	159
04440032-005	159
04440032-006	159
04440032-007	159
04440032-008	159
04440032-009	159
04440052-001	123AP
04440052-002	123AP
00444028-010	123AP
00444028-014	123AP
00444028-002	123AP
004440028-006	123AP
004440028-007	123AP
004440028-008	123AP
004440028-010	123AP
004440028-014	123AP
0450	116
0450NR07-1	1V300
0450NR14-3	2V300
0450NR20-4	524V30
04450002-001	123AP
04450002-004	123AP
04450002-005	123AP
04450016-001	159
04450016-002	159
04450016-003	129
04450023-001	130
04450023-005	181
04450023-006	130
04450023-007	181
04450037-001	181
04450037-002	182
04450300-1	5675
04450303-001	56006
04450303-002	56006
04450304	56006
004567	116
0460	116
05470	138A
004746	159
004747	273
004763	177
004781	197
004792	107
004795	726
004887	142A
09501	199
085016	109
09502	199
09502-8	123AP
025026	116
085026	110MP
015040/7	7404
025056	116
07506562	5635
025072	125
075085-36	614
0551029	166
0551029H	166
0552005	506
0552005H	117
0552006	116
0552006H	116
0552007	506
0552007H	117
0552010	116
0552010H	116
0455000	199
005575	181
09602	128
0602	5876
0604	5882
0260540	139A
0606	5890
0563012H	102A
01630052	54
01630053	54
09701	129
0701	116
057019H	109
0702	116
0703	108
0170301	177
0704	116
057040	104
0570519	109
0707	125
037077	175
037085	130
037085BL	181
037085BR	181
037085GR	181
037085OR	181
037085R	181
037085Y	181
09709	264
0710	116
0573001	102A
0573001-14	102A
0573001H	102A
0573002	126
0573003	102A
0573003H	102A
0573004	102A
0573005	102A
0573005-14	102A
0573005H	102A

PART NUMBER	NTE REPLACEMENT
0573011	102A
0573012	102A
0573012H	102A
0573018	102A
0573018H	102A
0573022	102A
0573022H	102A
0573023	102A
0573023A	102A
0573023H	102A
0573024	102A
0573024-14	102A
0573025	102A
0573030	131
0573030-14	131
0573031	131MP
0573034	102A
0573036	102A
0573036H	102A
0573037	103A
0573037H	103A
0573040	104MP
0573055	158
0573056	102A
0573066	123AP
057500	109
0575001	109
0575001H	109
0575002	109
0575002AH	109
0575002H	109
0575004	109
0575005	109
0575005H	109
0575007	109
0575010	614
0575010H	614
0575019	110MP
0575019H	110MP
0575024	614
0575024(8)	614
0575024H	614
0575027	614
0575047	506
0575047H	506
0575048	174
0575048H	174
0575049	506
0575049H	506
0575050	125
0575051	116
0575054	506
0575066	506
0575067	109
0575099	109
0576001	102A
0576054	116
0576054(BIAS)	116
0576054(SW)	177
00764-16	175
00765A	175
00766-18	175
04770	109
0770	185
0577001	109
018069	129
018077	128
09820555	1292
0690403A47	2V150
04970	125
0899024	5312
08990202	5309
08990207	5312
08990208	166
08990210	5312
08990211	5314
08990214	5312
0099201-325	5081A
0099202-128	147A
0099203-005	116
0099203-007	116
0.5Z5.1U	5010A
0-00(AMPEX)	129
0-008	128
0-008(AMPEX)	129
0-009	129
0A01-08R	5072A
0A7	109
0A8-1	160
0A8-1-12-7	160
0A8-1-12	160
0A9	109
0A9M	109
0A10	5806
0A70	109
0A73	109
0A81	109
0A90	109
0A90A-G	109
0A90AM	109
0A90FM	110MP
0A90G	109
0A90LF	109
0A90M	109
0A90MLF	112
0A90Z	109
0A90ZA	109
0A91	109
0A95	110MP
0A99	109
0A126/10	5020A
0A126/12	142A
0A180	109
0A12612	142A
0AZ209	135A
0AZ213	142A
0AZ243	137A
0AZ244	5014A
0AZ246	5016A
0AZ269	135A
0B2764K-2	2764
0C3K	102
0C16	104
0C19	121
0C20	121
0C22	104
0C23	104
0C24	104
0C25	104
0C26	104
0C32	102
0C35	104
0C36	104
0C41	102
0C45	102A
0C46	102A
0C56	102
0C71	102A
0C72	102A
0C74	102A
0C74N	158
0C76	102A
0C83	158
0C84	158
0C169	160
0C238	123AP
0C308	158
0C463K	194
0C-16	121
0C-22	121
0C-23	121
0C-24	121
0C-25	121
0C-26	121
0C-30A	121
0C-35	121
0C-36	121
0C-44	100
0C-45	100
0C-46	100
0C-47	100
0C-130	100
0C-304	176
0DD3000EJ	552
0DD20000AF	552
0DD100009AC	552
0DD100009AE	552
0DD100009BA	552
0DD200009AF	552
0DD300009AB	580
0DD400000AF	506
0DD400209AA	116
0DD400509BA	116
0DD414809ED	177
0DD606000AA	5330
0DFD120000BB	597
0DZ51009AB	5010A
0DZ62000BA	137A
0DZ240009BB	5023A
0DZ360000BA	5006A
0DZ510009AB	5010A
0DZ680009AA	5014A
0DZ910009AB	139A
0DZ910009BA	139A
0F66	506
0F160	116
0F162	177
0F164	116
0F173	109
0G02	5876
0ISS330000A	615P
0IT0631000A	3041
0LM7805CK	931
0N020540	128
0N064071-1	102A
0N047204-2	123AP
0N008341C-2	102A
0N008351	100
0N097164	124
0N271	123AP
0N769	47
0N47204-1	123AP
0N101881	903
0N120623	519
0N143285	519
0N161646C	102A
0N187840	941
0N188320-2	4001B
0N198382-2	4016B
0N206068	519
0S4.000654	177
0S22.3504-060	102
0S22.3504-040	102
0S22.3505-910	102
0S22.3511-780	160
0S22.3511-790	160
0S22.3511-770	160
0S22.3516-380	126
0S22.3640-080	108
0S22.3640-050	121
0S22.3640-081	224
0S22.3640-082	224
0S22.3901-001	109
0S22.3902-001	109
0S22.3905-001	116
0S133.0008T	159
0S133.1003T	159
0S492	176
0S536G	123AP
0S-90	109
0SD0033	138A
0SD-0033	138A
0TR188600AA	2324
0TR206800BB	376
0TR595000AB	55
0V02	506
0Z12T5	142A
0Z12T10	142A
0Z27T5	146A
0Z27T10	146A
0ZA7.5V	5015A
01	159
01-080019	453
01-070019	132
01-070030	132
01-080045	222
01-080059	222
01-040201	130
01-030509	290
01-030509(NPN)	289
01-030900	199
01-040234	152
01-040243	152
01-040299	238
01-040313	196
01-030372	199
01-030373	199
01-030380	229
01-030388	233
01-040389	152
01-030394	229
01-030454	289
01-030458	199
01-040471	293
01-010473	153
01-040476	196
01-030495	295
01-010495	159
01-030536	199
01-020562	294
01-010562	290
01-010564	234
01-020566	197
01-010628	159
01-030643	238
01-030668	229
01-010673	290
01-030682	161
01-030710	107
01-030711	199
01-010719	290
01-040724	291
01-030732	199
01-010733	294
01-030733	129
01-030734	128
01-030735	289
01-030763	229
01-030784	199
01-030785	229
01-030828	199
01-030829	123AP
01-010844	234
01-030930	107
01-030945	199
01-030983	287
01-031018	299
01-031047	229
01-031096	186A
01-031306	235
01-031507	198
01-031906	107
01-031909	235
01-032028	295
01-032029	235
01-032057	319P
01-032076	123AP
01-032078	235
01-032092	235
01-031166	297
01-031173	236
01-031175	123AP
01-031213	289
01-031239	237
01-031293	233
01-031317	289
01-031318	297
01-031327	199
01-031359	229
01-031360	107
01-031364	123AP
01-031446	198
01-031514	376
01-031520	198
01-031550	157
01-031674	107
01-031675	229
01-031678	235
01-031685	199
01-031686	229
01-031687	123AP
01-031688	123AP
01-031756	198
01-031760	306
01-031815	199
01-0318145	199
01-031846	306
01-031855	229
01-031921	287
01-031923	233
01-031957	295
01-031964	235
01-032314	295
01-03945	199
01-201-0	123AP
01-1201-0	102A
01-1205-OP	179
01-1501	177
01-2101	123AP
01-2101-0	123AP
01-2102	123AP
01-2104	123AP
01-2105	123AP
01-2106	123AP
01-2107	123AP
01-2108	123AP
01-2109	123AP
01-2110	128
01-2111	128
01-2114	128
01-2303-0	5080A
01-2303-1	5080A
01-2303-3	5071A
01-2405-0	116
01-2405-1	116
01-2405-2	116
01-2406-1	116
01-2601	177
01-2601-0	177
01-2603-0	177
01-9011-5/2221-3	123AP
01-9011-52221-3	123AP
01-9013-7/2221-3	123AP
01-9013-72221-3	123AP
01-9014-2/2221-3	123AP
01-9014-22221-3	123AP
01-9016-4/2221-3	123AP
01-9016-42221-3	108
01-9018-6/2221-3	123AP
01-9018-62221-3	108
01-30828	229
01-30829	123AP
01-57291	152
01-117005	108
01-117006	108
01-119185-01	740A
01-119185-02	740A
01-119185-03	740A
01-121365	712
01-349418	123AP
01-349423	123A
01-349426	229
01-349634	123AP
01-349681	159
01-472814	289
01-571591	159
01-571751	159
01-571794	161
01-571804	233
01-571811	123AP
01-571821	123AP
01-571831	287
01-571921	124
01-571941	154
01-572088	171
01-572588	159
01-572631	238
01-572774	153
01-572784	152
01-572791	152
01-572811	290
01-572814	289
01-572831	154
01-572861	152
01-680415	287
01-680815	123AP
01-690261	192
01-690471	297
01-690564	298
01-690643	193A
01-690733	294
01-690945	199
01-691167	229
01-691674	229
01-700542	159
01F	703
01F-SL8020	703
01K5.4E	135A
01K6.5E	137A
01K-3.6E	134A
01K-3.8E	5067A
01K-4.6E	5069A
01K-5.0E	135A
01K-5.2E	135A
01K-5.4E	136A
01K-5.8E	136A
01K-6.5E	137A
01ST-MPS9700D	123AP
02-010103	1192
02-010612	1249
02-091128	712
02-2SC458LGC	199
02-1001-1/2221-3	109
02-1001-1221-3	109
02-1006-2/2221-3	177
02-1006-22221-3	177
02-1078-01	123AP
02-3002-2/2221-3	116
02-3002-22221-3	116
02-5004	5697
02-5004-6	5695
02-5184-11	5675
02-33379-6	128
02-33379-7	172A
02-56125-1	815
02-103898	2061
02-121201	1003
02-121365	712
02-124422	1155
02-165143	712
02-257130	1234
02-257205	1155
02-257310	1192
02-263001	1192
02-280007	1262
02-300023	1046
02-300574	147A
02-300577	1082
02-310023	1046
02-341125	712
02-341128	712
02-341358	712
02-343065	712
02-360002	1233
02-373001	1192
02-403065	712
02-437205	1155
02-437310	1192
02-537666	712
02-540800	1116
02-561171	791
02-561201	783
02-561251	815
02-561410	714
02-781050	977
02-781060	989
02-RECT-UG-1044	116
02B3	5021A
02BZ2.2	5000A
02BZ2.7	5002A
02BZ3.3	5005A
02BZ3.9	5067A
02BZ4.7	5069A
02P1B	159
02P1BC	189
02RECT-UG-1004	5304
02SC458LGC	123AP
02ST-2SC1815GR	85
02ST-2SC1815Y	85
02ST-2SC1875	389
02Z5.6	136A
02Z5.6A	5011A
02Z5.6Y	5011A
02Z6	5013A
02Z6.2	137A
02Z6.2A	5013A
02Z6.2U	5013A
02Z6.2W	5013A
02Z6.2WFA-1	5013A
02Z6.8A	5014A
02Z7.5	138A
02Z7.5A	138A
02Z8.2	5072A
02Z8.2A	5072A
02Z9.1	139A
02Z9.1A	139A
02Z10A	140A
02Z10A-U	140A
02Z11A	5074A
02Z12A	5021A
02Z12GR	5021A
02Z13A	5022A
02Z15	145A
02Z15A	145A
02Z16A	5075A
02Z18	5079A
02Z18A	5077A
02Z20A	5029A
02Z22A	5030A
02Z24	5081A
02Z24A	5081A
02Z62A	137A
02Z102A	139A
02Z-6.2A	137A
02Z-7.5A	138A
02Z-8.2A	5072A
02Z-9.1A	139A
02Z-10A	140A
03-0020-0	102
03-0018-0	116
03-0018-6	124
03-0021-0	109
03-0022	102
03-0023-0	102
03-0063-04	177
03-034-042	519
03-57-001	126
03-57-002	126
03-57-003	160
03-57-101	126
03-57-102	160
03-57-200	160
03-57-201	126
03-57-202	160
03-57-301	102
03-57-302	102A
03-57-304	102
03-57-501	121
03-156B	102A
03-160	109
03-460C	108
03-461B	108
03-535A	108
03-1585/G	123AP
03-3016	116
03-931051	109
03-931601	116
03-931609	116
03-931641	177
03-931642	177
03-931645	177
03-931771	109
03-931971	116
03-933935	5086A
03-933943	142A
03-936011	506
03A02	293
03A03	107
03A04	106
03A05	123AP
03A06	159
03A09	312
03A10	222
03A11	123AP
03A12	123AP
03K-3.5E	134A
03K-4.2E	5067A
03SI-MC1352P	749
03SZ-RD12EB	5021A
04-00460-03	123AP
04-000653	519
04-000655-1	519
04-00072-01	103A
04-02090-02	123AP
04-07150-01	187A
04-00156-03	158
04-00461-02	107
04-00535-02	107
04-00535-06	108
04-01585-06	123AP
04-01585-07	123AP
04-01585-08	107
04-2	614
04-57-303	102
04-4600-02	123AP
04-8054-3	116
04-8054-4	116
04-8054-7	116
04-11620-01	186A
04-15850-06	107
04-38190-01	132
04-46000-02	229
04-67000-01	159
04-440032-002	159
04-440032-008	159
04A1	121
04A1-12	121
04A-1-12-7	121
04AZ4.3X	5008A
04AZ4.3Y	5008A
04AZ4.7X	5010T1
04AZ4.7Y	5009A
04AZ5.1X	5010A
04AZ5.1Y	5010T1
04AZ5.6-X	5011T1
04AZ5.6X	5010A
04AZ5.6Y	5011T1
04AZ5.6Z	5011T1
04AZ6.2-Y	5013T1
04AZ6.2X	5013T1
04AZ6.2Y	5013A
04AZ6.8-Z	5014A
04AZ6.8X	5014A
04AZ6.8Y	5014A
04AZ6.8Z	5014A
04AZ6.85	5014A
04AZ7.5-X	584
04AZ7.5X	5014A
04AZ8.2X	5015A
04AZ8.2Z	5016A
04AZ9.1X	5018A
04AZ9.1Y	5018A
04AZ9.1Z	5018A
04AZ10-X	5019T1
04AZ10X	5018A
04AZ12-Y	5021T1
04AZ12X	5021T1
04AZ12Y	5021T1
04AZ15-Z	5024A
04AZ15Z	5024A
04AZ20-Y	5028A
04AZ20Y	5028A
04AZ20Z	5028A
04AZ27.5X	5015A
04S05	299
04S06	235
04S30	159
04S48	123AP
04S51	287
04ST-2SC9450(AU)E	85
04SZ-UZ-6.2B	5013A
05-00000-00	109
05-00060-00	109
05-00060-01	109
05-040004	552
05-000104	116
05-040006	552
05-04800-02	5072A
05-04001-02	116
05-001100	116
05-00160-01	109
05-00085-00	614
05-060110	5074A
05-03016-01	116
05-02160-01	177
05-002139	611
05-02638-01	614
05-18155	177
05-69669-01	5071A
05-95017	5077A
05-110046	506
05-110106	5071A
05-110107	5071A
05-110108	138A
05-110442	177
05-111011	5074A
05-112404	506
05-112406	125
05-123103	552
05-141025	116
05-150018	116
05-150046	605A
05-170034	109
05-170060	109
05-174002	116
05-174004	116
05-180034	109
05-180053	177
05-180188	109
05-180553	612
05-180953	519
05-181555	177
05-181658	613
05-182076	519
05-182236	612
05-182688	614
05-190061	116
05-200310	614
05-320301	177
05-328518	614
05-330150	177
05-330161	519
05-331091	5015A
05-370151	503
05-429602	116
05-472209	614
05-480086	5017A
05-480204	5067A
05-480205	135A
05-480306	5070A
05-490090	109
05-490091	109
05-490095	109
05-540001	116
05-540082	5072A
05-540091	139A
05-540094	139A
05-540112	116
05-610046	109
05-740012	552
05-750010	116
05-780251	614
05-800015	506
05-860002	506
05-931601	116
05-931609	116
05-931642	177
05-931645	177
05-931771	109
05-931971	116
05-932510	109
05-933935	5086A
05-933943	142A
05-933948	5076A
05-933950	5075A
05-935201	116
05-936010	506
05-936470	177
05-950177	5077A
05-990094	139A
05A	5009A
05A01	177
05A03	109
05A05	177
05A06	519
05A07	116
05A08	614
05A7.5-Y	138A
05AZ5.6Y	5011A
05AZ75	5046A
05AZ75-R	5046A
05B	5009A
05B1Z	712
05B2B	712
05B2D	712
05B2M	712
05B2Z	712
05B486	161
05C	5010A
05D	5010A
05DS442S2	519
05M1	5010A
05M1(ZENER)	5010A
05ST-2SA844C	234
05ST-2SC2482	399
05V-50	116
05Z3.0-Y	5004A
05Z3.0Y	5004A
05Z3.3XLC-5	5005A
05Z3.9X	5007A
05Z3.9Y	5007A
05Z3.0Y	5004A
05Z4.3-X	5008A
05Z4.3-Y	5008A
05Z4.3X	5008A
05Z4.3Y	5008A
05Z4.7-Z	5009A
05Z4-3Y	5008A
05Z5.1	5010A
05Z5.1-X	5010A
05Z5.1L	135A
05Z5.1X	5010A
05Z5.1Y	5010A
05Z5.1Z	5010A
05Z5.6	5011A
05Z5.6-X	5011A
05Z5.6X	5011A
05Z5.6Y	5011A

PART NUMBER	NTE REPLACEMENT
05Z5.6Z	5011A
05Z5-1X	5010A
05Z5-1Y	5010A
05Z6.2	137A
05Z6.2-Z	5013A
05Z6.2W	5013A
05Z6.2WFA-1	5013A
05Z6.2Y	5013A
05Z6.2Z	5013A
05Z6.8	5014A
05Z6.8-X	5014A
05Z6.8-Y	5014A
05Z6.8X	5014A
05Z6.8Y	5014A
05Z6.8Z	5014A
05Z7.5	5013A
05Z7.5-L	138A
05Z7.5-UNI	138A
05Z7.5-X	138A
05Z7.5-Y	5015A
05Z7.5Y	5015A
05Z8.2	5072A
05Z8.2X	5072A
05Z8.2Z	5016A
05Z9.1	139A
05Z9.1-Z	5018A
05Z9.1L	139A
05Z9.1U	139A
05Z9.1Z	5018A
05Z10	140A
05Z10L	140A
05Z11	5074A
05Z11-Z	5020A
05Z11Y	5020A
05Z11Z	5020A
05Z12	5021A
05Z12-X	5021A
05Z12-Y	5021A
05Z12-Z	5021A
05Z12X	5021A
05Z12Y	5021A
05Z12Z	5021A
05Z13	5022A
05Z13X	5022A
05Z13Y	5022A
05Z13Z	143A
05Z15	5024A
05Z15-X	145A
05Z15-Y	5024A
05Z15L	5024A
05Z15X	5024A
05Z15Y	5024A
05Z15Z	5024A
05Z16	5075A
05Z16X	5025A
05Z18	5077A
05Z18L	5027A
05Z20	5029A
05Z20-X	5029A
05Z20-Y	5029A
05Z20X	5029A
05Z20Y	5029A
05Z22	5030A
05Z22X	5030A
05Z24	5031A
05Z24AU	5031A
05Z24L	5031A
05Z24Y	5031A
05Z27	5033A
05Z30	5035A
05Z33-Y	5036A
05Z33Y	5036A
05Z72	5093A
05Z82	5047A
05Z-6.2L	5013A
05Z-10	140A
05Z-22X	5030A
05Z-24A	5013A
05ZB2	5047A
05ZH.7-X	5009A
06 ST-2SC1906	107
06A	5011A
06A(ZENER)	5012A
06B1AH	722
06B1B	722
06B1D	722
06B1M	722
06B1Z	722
06B2Z	722
06B-3	121MP
06B-3-12	121MP
06B-3-12-7	121MP
06C	5012A
06D	5012A
06M	5012A
06M6(ZENER)	5012A
06M(ZENER)	5012A
06P1C	121
06ST-2SC1906	107
07-07113	290
07-07119	102A
07-07124	123AP
07-07125	123AP
07-07129	229
07-07139	123AP
07-07141	237
07-07156	123AP
07-07158	132
07-07159	133
07-07163	289
07-07164	237
07-07165	186A
07-07166	199
07-07167	103A
07-07459	161
07-1075-01	102A
07-1075-02	102A
07-1077-02	102A
07-1156-03	102A
07-1458-85	123AP
07-1777-03	283
07-2012-04	102A
07-3012-04	102A
07-3015-05	102A
07-3080-06	160
07-3350-57	126
07-4233-19	160
07-4235-13	160
07-4235-73	160
07-5085-36	614
07-5134-14	109
07-5134-14A	109
07-5134-14B	109
07-5134-14C	109
07-5160-15	110MP
07-5160-15A	112
07-5160-15B	112
07-5160-15C	112
07-5331-86	137A
07-5331-86A	136A
07-5331-86B	136A
07-5331-86C	136A
07-5331-86D	136A
07-6015-16	102A
07-22816-90	519
07-28777-40	1123
07-28777-41	712
07-28777-42	1263
07-28777-45	1266
07-28777-47	1268
07-28777-56	1408
07-28777-70	290A
07-28777-71	290A
07-28777-72	374
07-28777-76	107
07-28777-83	289A
07-28777-87	373
07-28777-91	601
07-28777-92	519
07-28777-93	109
07-28777-94	110MP
07-28777-95	605A
07-28777-96	112
07-28777-100	5013A
07-28777-101	3025
07-28777-102	3021
07-28777-108	610
07-28777-109	112
07-28777-110	610
07-28778-72	1425
07-28778-75	1419
07-28778-79	373
07-28778-80	289A
07-28778-82	234
07-28778-84	219
07-28778-85	312
07-28778-86	519
07-28815-73	5022A
07-28815-75	290A
07-28815-76	290A
07-28815-77	290A
07-28815-82	85
07-28815-83	107
07-28815-84	85
07-28815-86	85
07-28815-89	199
07-28815-92	125
07-28815-97	5011A
07-28815-100	1402
07-28815-101	958
07-28815-103	153
07-28815-108	290A
07-28815-116	519
07-28816-70	1428
07-28816-71	1400
07-28816-72	1422
07-28816-73	1223
07-28816-74	187A
07-28816-75	85
07-28816-76	109
07-28816-77	116
07-28816-78	5007A
07-28816-81	615P
07-28816-83	9403
07-28816-84	4016B
07-28816-85	4050B
07-28816-86	4069
07-28816-87	290A
07-28816-88	85
07-28816-89	519
07-28816-90	519
07-28816-91	109
07-28816-92	144A
07-28816-93	147A
07-28816-94	290A
07-28817-71	1422
07-28817-78	4012B
07-28817-79	4001B
07-28817-80	4011B
07-28817-81	4013B
07-28817-82	4023B
07-28817-83	4027B
07-28817-84	4069
07-28817-85	4081B
07-28817-86	4503B
07-28817-112	5011A
07-28817-119	125
07-28817-120	519
07-28817-336	615P
07-28817-375	5022A
07-28817-376	5015A
07-28817-378	140A
07-28817-379	5013A
07-28977-79	4025B
07-28977-80	4049
07-28977-81	4066B
07-28977-82	4078B
07-28977-86	834
07-28977-87	7416
07-28977-89	962
07-28977-90	391
07-28977-101	5012A
07-28977-105	5041A
07-28977-106	5010A
07-28977-107	605A
07-28977-113	5022A
07-28977-119	605A
07-28977-120	552
07-28977-121	5010A
07-28977-123	5016A
07-28977-125	960
07-28977-127	5025A
07-28977-128	1414
07-46100-100	1425
07-58977-122	5014A
07B1Z	708
07B2B	708
07B2Z	788
07B3B	708
07B3C	708
07B3D	708
07B3M	708
07B3Z	708
07B27	708
07B(ZENER)	5014A
07D	5015A
07M	5014A
07M6	5014A
07SD-1S1555	177
07SD-1S1887	116
07SD-1S-1887	116
07SD-1S-1887(AU)	116
07SD-IS-1887(AU)	116
07SD-IS1887(AU)	116
07ST-2SC383W	85
07SZ-UZP-11B	5074A
08	139A
08-0040	116
08-08120	145A
08-0821	116
08-08111	109
08-08112	110MP
08-08117	177
08-08119	177
08-08122	116
08-08125	139A
08-302152	229
08A	5015A
08A159-007	177
08A159-009	601
08A161-001	HVD-1
08A161-002	HVD-1
08A161-003	HVD-1
08A165-001	177
08A8300-2	123AP
08B1M	725
08B2D	725
08B2M	725
08D	156
08P-2	102A
08P-2-12	102A
08P-2-12-7	102A
08P-12-12	102A
08SD-1K34A	109
08ST-2SC945Q/R	85
09-033006	103A
09-002012	123AP
09-005	703
09-006	703
09-010	746
09-030214	123
09-017	722
09-018	788
09-3-2123	210
09-306-083	116
09-309-070	161
09-309-071	152
09-820-555	1292
09-3470-0	102A
09-3557-0	159
09-5506-0	140A
09-5507-0	126
09-5508-0	102A
09-5509-0	104
09-5961-0	123A
09-5963-0	6401
09-6516-0	102
09-7016-0	102A
09-7407-0	199
09-7554-0	102A
09-30011	126
09-30012	160
09-30036	129
09-30063	159
09-30104B	102A
09-30126	102A
09-30205	224
09-30313	102A
09-30318	152
09-30319	192
09-30501	199
09-30514	132
09-30636	110MP
09-30864	1006
09-30970	199
09-32124	108
09-36154	519
09-300002	126
09-300005	158
09-300006	126
09-300007	126
09-300011	126
09-300012	126
09-300015	126
09-300016	126
09-300017	102A
09-300021	160
09-300024	160
09-300026	234
09-300027	126
09-300028	160
09-300029	126
09-300036	234
09-300037	159
09-300037A	121
09-300043	129
09-300059	159
09-300061	159
09-300062	159
09-300063	159
09-300064	290
09-300067	187
09-300068	187
09-300070	290
09-300071	294
09-300072	193
09-300073	187A
09-300074	159
09-300076	294
09-300077	159
09-300078	126
09-300079	126
09-300080	290
09-300081	290
09-300084	160
09-300090	153
09-300307	159
09-301001	102A
09-301002	102A
09-301002-6	102A
09-301003	102A
09-301004	102A
09-301005	102A
09-301006	102A
09-301007	102A
09-301008	158
09-301008-18	102A
09-301009	102A
09-301010	104
09-301012	158
09-301014	158
09-301015	176
09-301016	102A
09-301019	158
09-301020	102A
09-301022	158
09-301023	102A
09-301024	131
09-301025	102A
09-301025-6	102A
09-301026	102A
09-301027	158
09-301030	226MP
09-301031	176
09-301032	102A
09-301034	131
09-301036	102A
09-301039	161
09-301048	102A
09-301050	288
09-301052	121
09-301054	158
09-301056	102A
09-301066	158
09-301071	127
09-301072	102A
09-301073	127
09-301074	102A
09-301075	131
09-301077	153
09-301079	127
09-301081	292
09-302002	229
09-302003	229
09-302004	233
09-302005	108
09-302006	229
09-302007	123AP
09-302009	108
09-302010	108
09-302012	123AP
09-302014	107
09-302015	195A
09-302016	233
09-302017	108
09-302019	123AP
09-302020	289
09-302028	161
09-302030	195A
09-302032	107
09-302033	123AP
09-302034	123AP
09-302035	195A
09-302036	229
09-302037	229
09-302037(I.C.)	1006
09-302038	199
09-302039	123AP
09-302040	289
09-302041	123AP
09-302044	107
09-302045	123AP
09-302045-12	123AP
09-302046	300
09-302050	237
09-302051	237
09-302053	199
09-302054	123AP
09-302055	195A
09-302056	237
09-302058	123AP
09-302060	108
09-302061	316
09-302062	123AP
09-302063	107
09-302068	195A
09-302072	107
09-302073	107
09-302074	123AP
09-302074(SHARP)	199
09-302075	192
09-302078	123AP
09-302079	107
09-302080	186A
09-302081	195A
09-302082	195A
09-302083	152
09-302085	199
09-302086	199
09-302090	128
09-302090(DIODE)	177
09-302092	107
09-302093	199
09-302095	229
09-302097	199
09-302099	154
09-302101	123AP
09-302102	299
09-302103	107
09-302106	123AP
09-302107	199
09-302113	186
09-302114	107
09-302115	108
09-302116	192
09-302117	237
09-302118	123AP
09-302119	235
09-302121	186A
09-302122	130
09-302123	186A
09-302124	123AP
09-302125	199
09-302126	186A
09-302127	199
09-302128	161
09-302129	107
09-302130	194
09-302131	123AP
09-302132	152
09-302135	299
09-302136	295
09-302138	107
09-302139	199
09-302140	123AP
09-302141	108
09-302142	107
09-302143	107
09-302144	107
09-302145	107
09-302146	124
09-302148	123AP
09-302149	108
09-302150	287
09-302151	107
09-302152	107
09-302153	123AP
09-302155	293
09-302156	124
09-302157	164
09-302158	163A
09-302159	162
09-302160	124
09-302161	193
09-302162	108
09-302164	152
09-302165	123AP
09-302169	237
09-302170	187
09-302171	128
09-302172	123AP
09-302173	289
09-302174	161
09-302175	123AP
09-302176	163A
09-302177	163A
09-302185	124
09-302186	198
09-302187	165
09-302189	123AP
09-302190	108
09-302191	123AP
09-302192	236
09-302193	236
09-302194	199
09-302199	161
09-302200	233
09-302201	161
09-302202	315
09-302203	107
09-302204	123AP
09-302206	229
09-302207	229
09-302212	295
09-302215	123AP
09-302216	107
09-302218	175
09-302219	302
09-302220	108
09-302222	297
09-302224	229
09-302225	229
09-302226	192
09-302227	123AP
09-302236	152
09-302237	198
09-302238	238
09-302240	161
09-302241	108
09-302242	229
09-302243	171
09-302244	123AP
09-302245	238
09-302246	165
09-302325	137A
09-303005	175
09-303006	103A
09-303012	103A
09-303013	103A
09-303018	152
09-303019	192
09-303020	196
09-303021	196
09-303022	152
09-303023	103A
09-303025	123AP
09-303028	124
09-303029	198
09-303030	103A
09-303031	152
09-303032	152
09-303033	152
09-303034	291
09-303036	287
09-303042	229
09-303058	123
09-304011	160
09-304012	159
09-304017	132
09-304019	107
09-304042	229
09-304043	229
09-304044	123AP
09-304045	123AP
09-304046	171
09-304047	159
09-304048	123AP
09-304049	159
09-304050	159
09-304051	159
09-304052	191
09-304055	182
09-304056	165
09-304057	164
09-304058	123AP
09-304140	152
09-305006	161
09-305007	107
09-305011	161
09-305014	132
09-305021	133
09-305023	133
09-305024	159
09-305031	133
09-305032	312
09-305033	107
09-305034	123AP
09-305036	107
09-305040	222
09-305041	107
09-305048	199
09-305049	300
09-305050	229
09-305051	229
09-305052	199
09-305058	234
09-305062	123AP
09-305063	123AP
09-305064	123AP
09-305065	123AP
09-305066	123AP
09-305067	123AP
09-305068	123AP
09-305069	108
09-305070	108
09-305071	108
09-305072	108
09-305073	159
09-305074	108
09-305075	129
09-305076	128
09-305077	123AP
09-305091	237
09-305092	297
09-305093	229
09-305094	229
09-305095	235
09-305096	229
09-305123	199
09-305124	315
09-305126	199
09-305131	102A
09-305132	161
09-305133	133
09-305134	129
09-305135	132
09-305136	235
09-305137	236
09-305139	123AP
09-305140	152
09-305148	123AP
09-305149	159
09-305150	287
09-305151	288
09-305152	123AP
09-306002	109
09-306008	614
09-306009	109
09-306010	109
09-306012	109
09-306014	614
09-306015	614
09-306018	614
09-306019	110MP
09-306020	109
09-306021	614
09-306023	614
09-306024	109
09-306024(ZENER)	145A
09-306028	174
09-306030	506
09-306031	506
09-306033	116
09-306034	116
09-306036	109
09-306037	109
09-306039	109
09-306040	109
09-306042(ZENER)	5072A
09-306046	116
09-306047	109
09-306049	109
09-306050	116
09-306051	109
09-306052	5014A
09-306053	156
09-306054	116
09-306055	137A
09-306057	110MP
09-306058	109
09-306059	116
09-306060	177
09-306061	109
09-306062	177
09-306063	116
09-306064	109
09-306073	5070A
09-306077	112
09-306083	116
09-306088	116
09-306089	112
09-306091	109
09-306093	109
09-306100	116
09-306101	113A
09-306102	125
09-306103	116
09-306104	116
09-306106	139A
09-306107	109
09-306108	109
09-306109	136A
09-306110	177
09-306110(ZENER)	145A
09-306111	177
09-306112	116
09-306113	177
09-306114	116
09-306115	116
09-306119	116
09-306124	139A
09-306125	116
09-306126	614
09-306127	143A
09-306129	177
09-306134	177
09-306135	519
09-306138	116
09-306141	506
09-306144	506
09-306145	177
09-306148	177
09-306149	116
09-306151	177
09-306154	177
09-306157	116
09-306158	139A
09-306159	177
09-306160	116
09-306161	177
09-306162	116
09-306163	177
09-306165	139A
09-306167	614
09-306168	178MP
09-306169	116
09-306170	177
09-306171	177
09-306172	116
09-306173	5022A
09-306176	116
09-306177	116
09-306178	177
09-306179	142A
09-306180	139A
09-306181	138A
09-306183	137A
09-306191	5010A

PART NUMBER	NTE REPLACEMENT
09-306192	116
09-306193	113A
09-306194	139A
09-306195	177
09-306196	5072A
09-306197	138A
09-306198	177
09-306199	177
09-306200	109
09-306201	614
09-306202	177
09-306204	177
09-306205	116
09-306206	177
09-306208	5070A
09-306209	112
09-306210	112
09-306211	177
09-306211(DIODE)	177
09-306211(ZENER)	5015A
09-306212	5015A
09-306212(RECT)	506
09-306212(ZENER)	5015A
09-306213	116
09-306214	116
09-306215	5071A
09-306216	112
09-306219	177
09-306220	177
09-306221	177
09-306222	109
09-306223	177
09-306224	116
09-306225	125
09-306226	125
09-306227	156
09-306228	140A
09-306229	110MP
09-306230	614
09-306231	177
09-306232	139A
09-306233	177
09-306235	140A
09-306236	177
09-306237	506
09-306238	5072A
09-306239	139A
09-306240	612
09-306241	139A
09-306242	5072A
09-306243	5075A
09-306244	519
09-306245	116
09-306247	139A
09-306248	177
09-306249	116
09-306250	116
09-306251	614
09-306253	614
09-306254	116
09-306255	116
09-306256	601
09-306257	177
09-306258	116
09-306259	116
09-306260	506
09-306261	112
09-306262	112
09-306263	116
09-306264	116
09-306265	614
09-306266	177
09-306268	5075A
09-306270	109
09-306274	125
09-306275	139A
09-306276	177
09-306277	5072A
09-306278	144A
09-306283	177
09-306285	116
09-306286	5071A
09-306287	139A
09-306288	177
09-306289	5068A
09-306290	109
09-306291	177
09-306300	116
09-306301	174
09-306302	116
09-306303	116
09-306304	156
09-306305	138A
09-306309	177
09-306310	505
09-306311	125
09-306312	116
09-306313	177
09-306314	5072A
09-306315	116
09-306323	116
09-306324	5075A
09-306325	5071A
09-306326	177
09-306327	139A
09-306329	614
09-306330	109
09-306331	109
09-306332	139A
09-306333	116
09-306334	109
09-306335	110MP
09-306336	109
09-306339	109
09-306341	116
09-306349	109
09-306350	116
09-306351	139A
09-306352	614
09-306353	116
09-306354	5072A
09-306355	5077A
09-306356	5072A
09-306359	614
09-306365	116
09-306366	116
09-306367	145A
09-306368	177
09-306369	614
09-306370	109
09-306373	177
09-306374	614
09-306375	139A
09-306376	116
09-306377	137A
09-306378	5072A
09-306379	156
09-306380	5067A
09-306381	5072A
09-306382	139A
09-306383	5070A
09-306384	116
09-306389	116
09-306390	177
09-306391	142A
09-306392	506
09-306393	504
09-306394	116
09-306401	139A
09-306417	116
09-306418	506
09-306419	5071A
09-306420	504
09-306421	116
09-306422	116
09-306423	506
09-306424	125
09-306425	506
09-306426	177
09-306427	116
09-306428	5074A
09-306429	5074A
09-306430	503
09-306431	116
09-306432	116
09-306433	116
09-307037	605A
09-307039	177
09-307043	116
09-307045	177
09-307055	177
09-307056	601
09-307075	177
09-307080	177
09-307081	177
09-307082	138A
09-307083	177
09-307084	116
09-307085	177
09-307088	5071A
09-307089	177
09-308004	703
09-308008	1003
09-308009	1046
09-308010	726
09-308011	1054
09-308013	703
09-308017	704
09-308019	703
09-308021	9946
09-308022	7400
09-308023	1004
09-308026	1091
09-308027	1047
09-308030	1089
09-308033	1045
09-308034	1006
09-308036	1103
09-308037	1029
09-308038	1142
09-308041	1100
09-308043	1103
09-308044	1120
09-308049	1019
09-308050	1002
09-308052	1082
09-308053	1075A
09-308054	1045
09-308058	1005
09-308059	1100
09-308061	1097
09-308062	1135
09-308063	1003
09-308064	1006
09-308065	1016
09-308066	1106
09-308067	1107
09-308069	1047
09-308070	1108
09-308071	1142
09-308072	107
09-308076	1052
09-308077	1012
09-308079	714
09-308080	1155
09-308084	1127
09-308089	1004
09-308090	749
09-308094	1243
09-308095	1087
09-308096	1092
09-308098	1045
09-308099	791
09-308100	1045
09-308102	1049
09-308208	137A
09-309006	123AP
09-309007	108
09-309012	123AP
09-309013	108
09-309015	108
09-309023	123AP
09-309024	108
09-309027	108
09-309028	108
09-309029	172A
09-309030	193
09-309031	192
09-309032	108
09-309038	159
09-309042	159
09-309049	123AP
09-309050	123AP
09-309059	199
09-309060	123AP
09-309061	289
09-309062	195A
09-309063	297
09-309064	123AP
09-309065	229
09-309069	107
09-309070	199
09-309071	186
09-309072	107
09-309073	108
09-309074	132
09-309075	103A
09-309076	123AP
09-309171	177
09-309672	107
09-310171	127
09-3002006	229
09-3060111	177
09-SI-BF459	157
09A02	746
09A04	74LS193
09A05	4020B
09A07	787
09C5	5018A
09D	5018A
09L-4	102A
09L-4-12	102A
09L-4-12-7	102A
09N1	123AP
09ST-2SA755C	153
09ST-BF459	157
011(UMI)	8098
011-00	191
011-021231	192A
011-H01	100
011H01	100
012(UMI)	8115
012-00	182
012-0121-001	177
012-1	123AP
012-1-12	123AP
012-1-12-7	123AP
012-1020-005	177
012-1021-001	177
012-1023-007	136A
012-1024-001	177
012-1025-002	156
012-103002	152
012-H02	100
012E	123AP
012H01	100
013(UMI)	8125
013-005002-06	754
013-0144-6438	116
013-1	5351
013-3	5351
013-339	116
013-768	5084A
014(UMI)	8125
014-556	105
014-611	159
014-652	159
014-652C	159
014-680	123AP
014-686	123AP
014-698	123AP
014-754	234
014-772	159
014-784	123AP
014-862	199
014A	121
014A-12	121
014A-12-7	121
015	108
015(LAMBDA)	912
015(UMI)	8149
015-002	116
015-006	116
015-1	5400
016	5636
016(UMI)	8167
016B12	123AP
016B810	123AP
016B812	123AP
017-003	199
017-012	290A
017-015	187A
017E824	123AP
018-00001	159
018-00002	159
018-00003	123AP
018-00004	187
018-00005	186
018-00006	116
018-00007	116
018-00008	116
018-00009	116
018-0008	116
018-0009	116
018-011	143A
018-2	379
018B	107
019-00010	123AP
019-005006	123AP
019-00009	123AP
019-005010	159
019-00301980	109
019-005021	123AP
019-005043	109
019-005045	5806
019-004094	199
019-002	3012
019-001918	109
019-001980	109
019-002691	5066A
019-002718	109
019-002935	116
019-002964	177
019-003315	160
019-003317	103
019-003318	103
019-003319	103
019-003324	100
019-003342	100
019-003343	100
019-003349	123AP
019-003411	140A
019-003415	158
019-003416	158
019-003420	116
019-003485	175
019-003637	128
019-003675-196	123AP
019-003675-203	123AP
019-003675-205	199
019-003675-207	123AP
019-003675-231	159
019-003675-232	159
019-003675-234	159
019-003675-246	123AP
019-003675-257	159
019-003676-334	519
019-003691	195A
019-003692	195A
019-003777	126
019-003778	160
019-003870-020	116
019-003870-013	116
019-003928	5012A
019-003929	108
019-003931	159
019-003932	123AP
019-003934	123AP
019-003935	224
019-004111	123AP
019-004428-002	123AP
019-004558	159
019-005157	161
019-005179	159
019-301980	109
021	128
021-0121-00	123AP
021-0137-00	128
021-0224-00	129
022	177
022.3504-040	102
022.3504-060	102
022.3505-910	102
022.3511-770	160
022.3511-780	160
022.3511-790	160
022.3516-380	126
022.3640-050	121
022.3640-080	108
022.3640-081	195A
022.3640-082	195A
022.3640-253	158
022.3901-001	109
022.3902-001	109
022.3905-001	116
022.5311-770	126
022-2876-005	133
022-2876-006	312
022-2876-007	319P
022-2876-008	222
022-2876-009	312
022-2876-010	295
022-2876-011	235
022-2876-012	236
022-3504-040	102
022-3504-060	102
022-3505-910	102
022-3511-770	160
022-3511-780	160
022-3511-790	160
022-3516-380	126
022-3640-050	121
022-3640-080	108
022-3640-081	195A
022-3640-082	195A
022-3640-253	158
022-3901-001	109
022-3902-001	109
022-3905-001	116
022-5311-770	126
022-5311-780	126
022-5311-798	126
022-5511-790	160
022-3511780	160
022-3511790	160
022A	703
022D	116
023	175
023(UMI)	8125
024	218
025	130
025(UMI)	8149
025-009600	107
025-1	730
025-10029	125
025-10030	123AP
025-10031	102A
025-100003	108
025-100004	108
025-100008	112
025-100009	108
025-100011	614
025-100012	161
025-100013	108
025-100014	108
025-100015	128
025-100016	116
025-100017	199
025-100018	123AP
025-100024	116
025-100026	107
025-100027	109
025-100028	116
025-100029	116
025-100030	123AP
025-100031	158
025-100035	116
025-100036	161
025-100036-12	161
025-100037	161
025-100037-12	161
025-100038	161
025-100038-12	161
025-100039	614
025-100040	123AP
025B	123AP
025B1C	730
025B-YEL	123AP
026-1000-20	104
026-100003	121
026-100004	121MP
026-100005	102
026-100012	102
026-100013	128
026-100017	123
026-100018	102
026-100019	129
026-100020	121MP
026-100026	123AP
026-100028	121
027-000306	116
027-000296	116
027-000312	116
027-300226	113A
028	124
028-300-226	110MP
029-JE	5882
029-JP	129
029-NB	5801
029-PN	3043
029-RB	311
031	156
031-002-0	123AP
031-025-0	123AP
031-098-0	235
031A	123AP
032	156
033-014-0	222
033-3	128
033-31(SYLVANIA)	123AP
033A	199
034-001-0	109
034-018-0	601
034-032-0	519
034A	194
035	156
035-013-0	611
037	123AP
037-250	5081A
038	128
039	129
041	123AP
041A	222
042	123AP
044-0603-210	316
044-9667-02	123AP
045	211
045-1	107
045-1(SYLVANIA)	108
045-2	107
045-2(SYLVANIA)	108
046-07037	5873
046-0909	177
046-0134	177
046-1	186
046-1(SYLVANIA)	186
046-40209	5872
047	221
047(DIODE)	177
047-1	187
047-1(SYLVANIA)	187
048(ZENER)	5075A
049	5081A
051-0100-00	1167
051-0003	177
051-0006	116
051-0020	177
051-0020-00	1087
051-0020-02	1087
051-0050-00	801
051-0050-01	801
051-003	177
051-0011-00	1103
051-0011-00-04	1103
051-0011-00-05	1107
051-0011-01	1103
051-0011-02	1103
051-0011-03	1103
051-0011-04	1103
051-0016-00	116
051-0017-00	722
051-0021-00	746
051-0022-00	709
051-0024	139A
051-0035-01	1087
051-0035-02	1087
051-0035-03	1087
051-0035-04	1087
051-0038-00	1005
051-0046	123AP
051-0047	123AP
051-0049	107
051-0055-0203	1155
051-0055-02	1155
051-0055-03	1155
051-0062	160
051-0062-00	1337
051-0063	160
051-0068-02	1003
051-0079	126
051-0086-00	1226
051-0088-00101	1217
051-0088-00	1217
051-0107	159
051-0107B	290
051-0151	175
051-0155	123AP
051-0156	195A
051-0157	195A
051-3999	542
052	172A
052A	172A
053	722
053-1	722
054	123AP
055	123AP
056	159
057	123AP
057B474H	161
058	116
058-001138	4016B
059	124
062	123AP
062-011200	HVD-2
062-011300	HVD-1
062-011400	HVD-4
062-012100	HVD-3
062-012500	HVD-12
065	175
065-001	132
065-002	132
065-004	123AP
065-006	199
065-007	186A
065-008	192
065-012	177
065-013	109
065-014	110MP
065-015	116
065-016	156
065-1	160
065-1-12	160
065-1-12-7	160
065-2	103A
065-2-12	103A
065-4	101
065-4-12	101
065-4-12-7	101
065-14	109
065-210	236
065A	160
065A-12	160
065A-12-7	160
065B	126
065B-12	126
065B-12-7	126
065C	121
065C-12	121
065C-12-7	121
066	128
066-1	102A
066-1-12	102A
066-1-12-7	102A
066-2	102A
066-2-12	102A
066-2-12-7	102A
066-3	102A
066-3-12	102A
066-3-12-7	102A
066X0040-007	5081A
066X0040-020	5018A
066X0040-018	5014A
066X0040-019	5007A
066X0040-021	5044A
066X0070-001	519
066X0023-009	116
066X0046-001	519
066X0066-001	113A
066X0068-001	525
066X0071-001	116
069	123AP
072	184
072-1	177
074-1	186A
074-1(PHILCO)	186
074-3	100
074-3-12-7	100
075-004016	4016B
075-004040	4040B
075-004052	4052B
075-004071	4071B
075-003080	902
075-004090	4066B
075-004093	4093B
075-004514	971
075-045037	9094
075-017824	972
075-017912	967
075-017915	969
075-017924	971
075-046270	7472
076-004001	4001B
076-004011	4011B
076-004012	4012B
076-004023	4023B
076-004052	4052B
077A	105
077A-12	105
077A-12-7	105
077B	121MP
077B-12	121MP
077B-12-7	121MP
077C	121
077C-12	121
077C-12-7	121
078-0016	116
078-1696	116
078-2400	116
078-5001	116
079	185
079-0510	1538
081	184
082	712
082.115.015	159
082-1	712
082A	712
082A(PACKARDBELL)	712
083-1	159
083-6	159
083A(PACKARD BELL)	196
083A(PACKARD-BELL)	196
084A	121
084A-12	121
084A-12-7	121
085	130
086	104
086-005132-02	123AP
086X0070-001	6402
086X0065-001	171
086X0066-001	159
086X0071-001	287
086X0072-001	159
086X0073-001	188
086X0074-001	182
086X0075-001	185
086X0113-001	123AP
086X0115-001	171
086X0116-001	171
086X0117-001	385
086X0118-001	165
086X0121-001	123AP
086X0123-001	130
086X0124-001	219
086X0127-001	108
086X0128-001	379
087	104
088-2	125
088B	160
088B-12	160
088B-12-7	160
088C	100
088C-12	100
088C-12-7	100
089-4	396
089-4(SYLVANIA)	157
089-214	108
089-215	108
089-216	108

PART NUMBER	NTE REPLACEMENT
089-220	126
089-222	102A
089-223	123AP
089-226	123AP
089-231	158
089-233	103
089-235	614
089-236	109
089-241	177
089-248	109
089-252	117
089-293	109
092-1	105
092-1-12	105
092-1-12-7	105
094	714
094-007	519
094-010	116
094-011	125
094-012	506
094-013	121
094-014	109
094-1	714
094A	714
094A(PACKARD BELL)	714
094A(PACKARD-BELL)	714
097	780
097-1	783
097A	780
097A(PACKARD BELL)	780
097A(PACKARD-BELL)	780
098-1	116
098-1(RCA)	154
098G1219	125
098GI219	125
099-1	152
099-1(PHILCO)	152
099-1(SYL)	152
0111	116
0112	116
0112-0019	109
0112-0026	109
0112-0028	109
0112-0028-6438	109
0112-0028/4460	109
0112-0028/5462	109
0112-0037	109
0112-0037-6438	109
0112-0046	109
0112-0073	109
0112-0082	109
0113-0027	614
0113-0036	614
0113-0036/4460	109
0114-0090	139A
0114-0090-6438	139A
0114-0017	139A
0114-0026/4460	5014A
0114-0260	5071A
0117-02	221
0117NR07-1	1V075
0117NR14-3	2V075
0121	123AP
0121(AIRLINE)	185
0122(AIRLINE)	184
0122-0028-6438	109
0123	185
0123(WARDS)	185
0124	184
0124(HOFFMAN)	184
0124(KNIGHT)	159
0124(WARDS)	184
0124A	159
0125	123AP
0126	123AP
0126(WARDS)	189
0127	123AP
0128	123AP
0131	123AP
0131-000100	102A
0131-000101	102A
0131-000802	160
0131-000102	102A
0131-000704	123AP
0131-003029	160
0131-002049	153
0131-001050	158
0131-001056	158
0131-002068	130
0131-000192	121
0131-000335	159
0131-000336	121
0131-000337	121
0131-000418	160
0131-000419	160
0131-000473	123AP
0131-000498	160
0131-000561	128
0131-000562	121
0131-000563	102A
0131-005807	128
0131-000859	160
0131-000862	160
0131-000863	160
0131-0026	116
0131-0035	116
0131-0044	116
0131-0053	116
0131-001182	160
0131-001314	160
0131-001328	159
0131-001329	159
0131-001332	160
0131-001417	123AP
0131-001418	123AP
0131-001419	102A
0131-001420	159
0131-001421	123AP
0131-001422	123AP
0131-001423	123AP
0131-001424	123AP
0131-001425	121
0131-001426	102A
0131-001427	129
0131-001428	129
0131-001429	128
0131-001430	128
0131-001433	160
0131-001434	160
0131-001435	160
0131-001436	160
0131-001438	106
0131-001439	159
0131-001464	123AP
0131-001597	130
0131-001697	160
0131-001864	123AP
0131-002656	102A
0131-004323	123AP
0131-004367	130
0131-004560	175
0131-004746	159
0131-004792	199
0131-005347	199
0131-005348	199
0131-005349	199
0131-005350	199
0131-005351	159
0131-005352	152
0131-005353	197
0131-04560	175
0131-026	116
0131-053	116
0131-0144-6438	601
0131-4328	159
0131-5352	196
0132	130
0133	159
0134	123AP
0135-1	5801
0137	219
0142	108
0148	552
0154	5642
0183NR07-1	1V115
0183NR07D	1V115
0183NR14-3	2V115
0211	5944
0216NR07=1	1V130
0216NR14-3	2V130
0221	5944
0234	116
0243	5836
0243-001	175
0244	116
0245	5840
0248	156
0276.8A	5071A
0311	116
0312	116
0314	116
0317	125
0321	116
0322	116
0324	116
0327	125
0383NR07-1	1V250
0383NR14-3	2V250
0411	116
0412	116
0415	196
0416NR07-1	1V275
0416NR14-3	2V275
0418	121MP
0418(HARMONKARDON)	121MP
0512GOF	5569
0514-040296	132
0514-023553	103A
0514-045244	159
0514-047828	210
0514-047829	211
0514-047830	186
0514-047837	211
0514-062121	197
0514-062122	196
0514-062161	197
0514-104031	46
0514-105395	123
0514-105396	129
0516-3101-250	313
0516-3101-406	313
0524.7X	5009A
0557-010	116
0575-005	109
0615	292
0648R	5071A
0684R	5071A
0727-50	116
0731	128
0737R	5071A
0765NR14-3	2V480
0765NR14DU	2V480
0765NR20-4	524V48
0772	184
0773	185
0776-0160	123AP
0776-0195	159
0783Z	709
0831	234
0838NR20-4	524V25
0847T0R402	15020E
0847TR2501	15019E
0912	288
011119	110MP
01122-0073	109
0112945	166
0112945(ELGIN)	166
011950	519
011956	519
013339	117
013339(RECT)	125
01339	116
013684	5882
014382	121
014558	154
014944	199
021154	116
022939	154
02375-A	175
023754	175
023762	130
02524	123AP
026237	123AP
02724A	5081A
031450	5802
033370	507
033421	507
033549	507
033563	192A
033571	129
033589	159
03571	109
041616	177
044883	181
046127	102
0517132	177
0517133	177
0517261B	614
0517550	116
0517550-3	116
0517750	116
0517750H	116
0517826	109
0517828	109
0517829	109
0518926	177
05253	121
0526224	109
0526232	177
053328	160
053480	161
053492	123AP
0537125	102A
0537640	116
0537640(DIO)	116
0537640(TRANS)	100
0537820	109
0539860	614
055210	117
055210H	116
055228	125
055228H	125
055269	125
057174	56006
0572480	85
057293	177
0573103	102
0573114	102A
0573114H	102A
0573117	102A
0573117-14	102A
0573119	102A
0573124H	126
0573125	102A
0573131	102A
0573139	103A
0573142	102A
0573142H	102A
0573152	102A
0573153	102A
0573153H	102A
0573166	104
0573184	158
0573185	176
0573187	102A
0573199	127
0573199H	127
0573200	102A
0573202	123AP
0573204	158
0573205	121
0573212	131
0573212H	127
0573328	102A
0573330	126
0573335	160
0573366	160
0573398	126
0573415	124
0573418	123AP
0573422	102A
0573422H	102A
0573427	126
0573428	160
0573429	102A
0573430	123AP
0573460	123AP
0573468	123AP
0573468(HITACHI)	107
0573469	123AP
0573469H	123AP
0573471	126
0573474	161
0573474H	161
0573475	161
0573479	289
0573479H	123AP
0573480	85
0573480H	128
0573481	123AP
0573481H	123AP
0573485	107
0573486	233
0573486H	108
0573487	233
0573487H	107
0573490	123AP
0573491	289
0573491H	123AP
0573492	289
0573494	108
0573495	108
0573481 5	85
0573501	154
0573506	108
0573506H	108
0573507	107
0573507H	108
0573508	107
0573509	229
0573509H	107
0573510	107
0573510H	107
0573511	108
0573511H	107
0573515	124
0573515H	124
0573517	128
0573518	126
0573519	154
0573523	123AP
0573525	175
0573526	163A
0573527	128
0573529	123AP
0573532	123AP
0573541	237
0573542	129
0573556	123AP
0573557	128
0573559	129
0573560	129
0573562	130
0573570	108
0573607	107
0573742	102A
0573981	123AP
057524	614
059395	109
059452	192A
06111	102A
06112	103A
06113	289A
06115	175
06116	280
06118	129
06119	162
06121	159
06124	158
06125	102A
06126	293
06127	199
06129	102A
06131	234
06135	290A
061366	199
0613761A02	2V150
06139	382
06141	43
06246-00	123AP
062971	5642
06511	133
06512	133
06516	458
06761	5635
071818	129
071964-001	130
07227851	85
07227853	85
07233301	85
07233312	293
07311951	261
07312371	54
07312731	56
07312771	261
0731395	2334
07313951	2334
07812	966
09152	123AP
09153	159
09161	123AP
09191	234
09212	159
09222	123AP
09232	199
09244	199
09262	123AP
09266	128
09271	199
09272	123A
09273	129
09311951	261
0939100A	925
09391000A	925
09554	242
09555	241
09556	242
09557	261
09558	262
09559	263
1	159
1.000.111-00	159
1.5B05	156
1.5BZ100D	5156A
1.5BZ110B	5157A
1.5BZ120	5158A
1.5BZ120C	5158A
1.5BZ130D	5159A
1.5BZ140B	5160A
1.5BZ150	5161A
1.5BZ150C	5161A
1.5C05	156
1.5DKZ6.8B	5120A
1.5DKZ6.8	5120A
1.5DKZ6.8A	5120A
1.5DKZ7.5A	5121A
1.5DKZ7.5	5121A
1.5DKZ8.2	5122A
1.5DKZ8.2A	5122A
1.5DKZ8.2B	5122A
1.5DKZ9.1	5124A
1.5DKZ9.1A	5124A
1.5DKZ9.1B	5124A
1.5DKZ10	5125A
1.5DKZ10A	5125A
1.5DKZ10B	5125A
1.5DKZ11	5126A
1.5DKZ11A	5126A
1.5DKZ11B	5126A
1.5DKZ12	5127A
1.5DKZ12A	5127A
1.5DKZ12B	5127A
1.5DKZ13	5128A
1.5DKZ13A	5128A
1.5DKZ13B	5128A
1.5DKZ15	5130A
1.5DKZ15A	5130A
1.5DKZ15B	5130A
1.5DKZ16	5131A
1.5DKZ16A	5131A
1.5DKZ16B	5131A
1.5DKZ18	5133A
1.5DKZ18A	5133A
1.5DKZ18B	5133A
1.5DKZ20	5135A
1.5DKZ20A	5135A
1.5DKZ20B	5135A
1.5DKZ22	5136A
1.5DKZ22A	5136A
1.5DKZ22B	5136A
1.5DKZ24	5137A
1.5DKZ24A	5137A
1.5DKZ24B	5137A
1.5DKZ27	5139A
1.5DKZ27A	5139A
1.5DKZ27B	5139A
1.5DKZ30	5141A
1.5DKZ30A	5141A
1.5DKZ30B	5141A
1.5DKZ33	5142A
1.5DKZ33A	5142A
1.5DKZ33B	5142A
1.5DKZ36	5143A
1.5DKZ36A	5143A
1.5DKZ36B	5143A
1.5DKZ39	5144A
1.5DKZ39A	5144A
1.5DKZ39B	5144A
1.5DKZ43	5145A
1.5DKZ43A	5145A
1.5DKZ43B	5145A
1.5DKZ47	5146A
1.5DKZ47A	5146A
1.5DKZ47B	5146A
1.5DKZ51	5147A
1.5DKZ51A	5147A
1.5DKZ51B	5147A
1.5DKZ56	5148A
1.5DKZ56A	5148A
1.5DKZ56B	5148A
1.5DKZ62	5150A
1.5DKZ62A	5150A
1.5DKZ62B	5150A
1.5DKZ68	5151A
1.5DKZ68A	5151A
1.5DKZ68B	5151A
1.5DKZ75	5152A
1.5DKZ75A	5152A
1.5DKZ75B	5152A
1.5E05	5800
1.5E1	5801
1.5E2	5802
1.5E3	156
1.5E4	5804
1.5E5	5805
1.5E6	5806
1.5E7	156
1.5E8	156
1.5E10	156
1.5E12	506
1.5E140	5160A
1.5J05	5800
1.5J1	5801
1.5J2	5802
1.5J3	5803
1.5J4	5804
1.5J5	5805
1.5J6	5806
1.5J7	156
1.5J8	156
1.5J10	156
1.5J12	506
1.5JA19B	5134A
1.5JZ6.8C	5120A
1.5JZ6.8	5120A
1.5JZ6.8A	5120A
1.5JZ6.8B	5120A
1.5JZ6.8D	5120A
1.5JZ7.5A	5121A
1.5JZ7.5C	5121A
1.5JZ7.5D	5121A
1.5JZ7.5B	5121A
1.5JZ7.5	5121A
1.5JZ8.2D	5122A
1.5JZ8.2C	5122A
1.5JZ8.2B	5122A
1.5JZ8.2	5122A
1.5JZ8.2A	5122A
1.5JZ9.1B	5124A
1.5JZ9.1A	5124A
1.5JZ9.1C	5124A
1.5JZ9.1D	5124A
1.5JZ9.1	5124A
1.5JZ10	5125A
1.5JZ10A	5125A
1.5JZ10B	5125A
1.5JZ10C	5125A
1.5JZ10D	5125A
1.5JZ11	5126A
1.5JZ11A	5126A
1.5JZ11B	5126A
1.5JZ11C	5126A
1.5JZ11D	5126A
1.5JZ12	5127A
1.5JZ12A	5127A
1.5JZ12B	5127A
1.5JZ12C	5127A
1.5JZ12D	5127A
1.5JZ13	5128A
1.5JZ13A	5128A
1.5JZ13B	5128A
1.5JZ13C	5128A
1.5JZ13D	5128A
1.5JZ14	5129A
1.5JZ14A	5129A
1.5JZ14B	5129A
1.5JZ14C	5129A
1.5JZ14D	5129A
1.5JZ15	5130A
1.5JZ15A	5130A
1.5JZ15B	5130A
1.5JZ15C	5130A
1.5JZ15D	5130A
1.5JZ16	5131A
1.5JZ16A	5131A
1.5JZ16B	5131A
1.5JZ16C	5131A
1.5JZ16D	5131A
1.5JZ17	5132A
1.5JZ17A	5132A
1.5JZ17B	5132A
1.5JZ17C	5132A
1.5JZ17D	5132A
1.5JZ18	5133A
1.5JZ18A	5133A
1.5JZ18B	5133A
1.5JZ18C	5133A
1.5JZ18D	5133A
1.5JZ19	5134A
1.5JZ19A	5134A
1.5JZ19B	5134A
1.5JZ19C	5134A
1.5JZ19D	5134A
1.5JZ20	5135A
1.5JZ20A	5135A
1.5JZ20B	5135A
1.5JZ20C	5135A
1.5JZ20D	5135A
1.5JZ22	5136A
1.5JZ22A	5136A
1.5JZ22B	5136A
1.5JZ22C	5136A
1.5JZ22D	5136A
1.5JZ24	5137A
1.5JZ24A	5137A
1.5JZ24B	5137A
1.5JZ24C	5137A
1.5JZ24D	5137A
1.5JZ25	5138A
1.5JZ25A	5138A
1.5JZ25B	5138A
1.5JZ25C	5132A
1.5JZ25D	5138A
1.5JZ27	5139A
1.5JZ27A	5139A
1.5JZ27B	5139A
1.5JZ27C	5139A
1.5JZ27D	5139A
1.5JZ30	5141A
1.5JZ30A	5141A
1.5JZ30B	5141A
1.5JZ30C	5141A
1.5JZ30D	5141A
1.5JZ33	5142A
1.5JZ33A	5142A
1.5JZ33B	5142A
1.5JZ33C	5142A
1.5JZ33D	5142A
1.5JZ36	5143A
1.5JZ36A	5143A
1.5JZ36B	5143A
1.5JZ36C	5143A
1.5JZ36D	5143A
1.5JZ39	5144A
1.5JZ39A	5144A
1.5JZ39B	5144A
1.5JZ39C	5144A
1.5JZ39D	5144A
1.5JZ43	5145A
1.5JZ43A	5145A
1.5JZ43B	5145A
1.5JZ43C	5145A
1.5JZ43D	5145A
1.5JZ47	5146A
1.5JZ47A	5146A
1.5JZ47B	5146A
1.5JZ47C	5146A
1.5JZ47D	5146A
1.5JZ51	5147A
1.5JZ51A	5147A
1.5JZ51B	5147A
1.5JZ51C	5147A
1.5JZ51D	5147A
1.5JZ56	5148A
1.5JZ56A	5148A
1.5JZ56B	5148A
1.5JZ56C	5148A
1.5JZ56D	5148A
1.5JZ62	5150A
1.5JZ62A	5150A
1.5JZ62B	5150A
1.5JZ62C	5150A
1.5JZ62D	5150A
1.5JZ68	5151A
1.5JZ68A	5151A
1.5JZ68B	5151A
1.5JZ68C	5151A
1.5JZ75	5152A
1.5JZ75A	5152A
1.5JZ75B	5152A
1.5JZ75C	5152A
1.5JZ75D	5152A
1.5JZ82	5153A
1.5JZ82A	5153A
1.5JZ82B	5153A
1.5JZ82C	5153A
1.5JZ82D	5153A
1.5JZ91	5155A
1.5JZ91A	5155A
1.5JZ91B	5155A
1.5JZ91C	5155A
1.5JZ91D	5155A
1.5JZ100	5156A
1.5JZ100A	5156A
1.5JZ100B	5156A
1.5JZ100C	5156A
1.5JZ110	5157A
1.5JZ110A	5157A
1.5JZ110C	5157A
1.5JZ110D	5157A
1.5JZ120A	5158A
1.5JZ120B	5158A
1.5JZ120D	5158A
1.5JZ130	5159A
1.5JZ130A	5159A
1.5JZ130B	5159A
1.5JZ130C	5159A
1.5JZ130D	5159A
1.5JZ140	5160A
1.5JZ140A	5160A
1.5JZ140C	5160A
1.5JZ140D	5160A
1.5JZ150A	5161A
1.5JZ150B	5161A
1.5JZ150D	5161A
1.5JZ160	5162A
1.5JZ160A	5162A
1.5JZ160B	5162A
1.5JZ160C	5162A
1.5JZ160D	5162A
1.5JZ200	5166A
1.5JZ200A	5166A
1.5JZ200B	5166A
1.5JZ200C	5166A
1.5JZ200D	5166A
1.5K6.8	4902
1.5K6.8A	4902
1.5K13	4918
1.5K13A	4918
1.5K18	4926
1.5K18A	4926
1.5K20	4928
1.5K20A	4928
1.5K27	4934
1.5K27A	4934
1.5K51	4950
1.5K51A	4950
1.5K68	4958
1.5K68A	4958
1.5K200	4988
1.5K200A	4988
1.5KE6.8CA	4903
1.5KE6.8	4902
1.5KE6.8A	4902
1.5KE13	4918
1.5KE13A	4918
1.5KE13AC	4919
1.5KE13C	4919
1.5KE13CA	4919
1.5KE18	4926
1.5KE18A	4926
1.5KE18AC	4927
1.5KE18C	4927
1.5KE18CA	4927
1.5KE20	4928
1.5KE20A	4928
1.5KE20AC	4929
1.5KE20C	4929

PART NUMBER	NTE REPLACEMENT
1.5KE20CA	4929
1.5KE27	4934
1.5KE27A	4934
1.5KE27AC	4935
1.5KE27C	4935
1.5KE27CA	4935
1.5KE51	4950
1.5KE51A	4950
1.5KE51AC	4951
1.5KE51C	4951
1.5KE51CA	4951
1.5KE68	4958
1.5KE68A	4958
1.5KE68AC	4959
1.5KE68C	4959
1.5KE68CA	4959
1.5KE200	4988
1.5KE200A	4988
1.5KE200AC	4989
1.5KE200C	4989
1.5KE200CA	4989
1.5M14Z	5129A
1.5M14Z10	5129A
1.5M17Z	5132A
1.5M17Z10	5132A
1.5M19Z	5134A
1.5M19Z10	5134A
1.5M25Z	5138A
1.5M25Z10	5138A
1.5M140Z	5160A
1.5R8.2	5122A
1.5R8.2B	5122A
1.5R8.2A	5122A
1.5R9.1B	5124A
1.5R9.1A	5124A
1.5R9.1	5124A
1.5R10	5125A
1.5R10A	5125A
1.5R10B	5125A
1.5R11	5126A
1.5R11A	5126A
1.5R11B	5126A
1.5R12	5127A
1.5R12A	5127A
1.5R12B	5127A
1.5R13	5128A
1.5R13A	5128A
1.5R13B	5128A
1.5R15	5130A
1.5R15A	5130A
1.5R15B	5130A
1.5R16	5131A
1.5R16A	5131A
1.5R16B	5131A
1.5R18	5133A
1.5R18A	5133A
1.5R18B	5133A
1.5R20	5135A
1.5R20A	5135A
1.5R20B	5135A
1.5R22	5136A
1.5R22A	5136A
1.5R22B	5136A
1.5R24	5137A
1.5R24A	5137A
1.5R24B	5137A
1.5R27	5139A
1.5R27A	5139A
1.5R27B	5139A
1.5R30	5141A
1.5R30A	5141A
1.5R30B	5141A
1.5R31	5144A
1.5R33	5142A
1.5R33A	5142A
1.5R33B	5142A
1.5R36	5143A
1.5R36A	5143A
1.5R36B	5143A
1.5R39A	5144A
1.5R39B	5144A
1.5R43	5145A
1.5R43A	5145A
1.5R43B	5145A
1.5R47	5146A
1.5R47A	5146A
1.5R47B	5146A
1.5R51	5147A
1.5R51A	5147A
1.5R51B	5147A
1.5R56	5148A
1.5R56A	5148A
1.5R56B	5148A
1.5R62	5150A
1.5R62A	5150A
1.5R62B	5150A
1.5R68	5151A
1.5R68A	5151A
1.5R68B	5151A
1.5R91	5155A
1.5R91A	5155A
1.5R91B	5155A
1.5R100	5156A
1.5R100A	5156A
1.5R100B	5156A
1.5R110	5157A
1.5R110A	5157A
1.5R110B	5157A
1.5R120	5158A
1.5R120A	5158A
1.5R120B	5158A
1.5R130	5159A
1.5R130A	5159A
1.5R130B	5159A
1.5R140	5160A
1.5R140A	5160A
1.5R140B	5160A
1.5R150	5161A
1.5R150A	5161A
1.5R150B	5161A
1.5R160	5162A
1.5R160A	5162A
1.5R160B	5162A
1.5R180	5164A
1.5R180A	5164A
1.5R180B	5164A
1.5R200	5166A
1.5R200A	5166A
1.5R200B	5166A
1.5SE6.8CA	4903
1.5SE18CA	4927
1.5SE27CA	4935
1.5SE51CA	4951
1.5SE68CA	4959
1.5SE200CA	4989
1.5Z6.8A	5120A
1.5Z6.8B	5120A
1.5Z6.8C	5120A
1.5Z6.8	5120A
1.5Z7.5B	5121A
1.5Z7.5A	5121A
1.5Z7.5	5121A
1.5Z7.5C	5121A
1.5Z7.5D	5121A
1.5Z8.2B	5122A
1.5Z8.2C	5122A
1.5Z8.2A	5122A
1.5Z8.2D	5122A
1.5Z8.2	5122A
1.5Z9.1B	5124A
1.5Z9.1	5124A
1.5Z9.1D	5124A
1.5Z9.1A	5124A
1.5Z9.1C	5124A
1.5Z10	5125A
1.5Z10A	5125A
1.5Z10B	5125A
1.5Z10C	5125A
1.5Z10D	5125A
1.5Z11	5126A
1.5Z11A	5126A
1.5Z11B	5126A
1.5Z11C	5126A
1.5Z11D	5126A
1.5Z12	5127A
1.5Z12A	5127A
1.5Z12B	5127A
1.5Z12C	5127A
1.5Z12D	5127A
1.5Z13	5128A
1.5Z13A	5128A
1.5Z13B	5128A
1.5Z13C	5128A
1.5Z13D	5128A
1.5Z14	5129A
1.5Z14A	5129A
1.5Z14B	5129A
1.5Z14C	5129A
1.5Z14D	5129A
1.5Z15	5130A
1.5Z15A	5130A
1.5Z15B	5130A
1.5Z15C	5130A
1.5Z16	5131A
1.5Z16A	5131A
1.5Z16B	5131A
1.5Z16C	5131A
1.5Z16D	5131A
1.5Z17	5132A
1.5Z17A	5132A
1.5Z17B	5132A
1.5Z17C	5132A
1.5Z17D	5132A
1.5Z18	5133A
1.5Z18A	5133A
1.5Z18B	5133A
1.5Z18C	5133A
1.5Z18D	5133A
1.5Z19	5134A
1.5Z19A	5134A
1.5Z19B	5134A
1.5Z19C	5134A
1.5Z19D	5134A
1.5Z20	5135A
1.5Z20A	5135A
1.5Z20B	5135A
1.5Z20C	5135A
1.5Z20D	5135A
1.5Z22	5136A
1.5Z22A	5136A
1.5Z22B	5136A
1.5Z22C	5136A
1.5Z22D	5136A
1.5Z24	5137A
1.5Z24A	5137A
1.5Z24B	5137A
1.5Z24C	5137A
1.5Z24D	5137A
1.5Z27	5139A
1.5Z27A	5139A
1.5Z27B	5139A
1.5Z27C	5139A
1.5Z27D	5139A
1.5Z30	5141A
1.5Z30A	5141A
1.5Z30B	5141A
1.5Z30C	5141A
1.5Z30D	5141A
1.5Z31C	5144A
1.5Z33	5142A
1.5Z33A	5142A
1.5Z33B	5142A
1.5Z33C	5142A
1.5Z33D	5142A
1.5Z36	5143A
1.5Z36A	5143A
1.5Z36B	5143A
1.5Z36C	5143A
1.5Z36D	5143A
1.5Z39	5144A
1.5Z39A	5144A
1.5Z39B	5144A
1.5Z39D	5144A
1.5Z43	5145A
1.5Z43A	5145A
1.5Z43B	5145A
1.5Z43C	5145A
1.5Z43D	5145A
1.5Z47	5146A
1.5Z47A	5146A
1.5Z47B	5146A
1.5Z47C	5146A
1.5Z47D	5146A
1.5Z51	5147A
1.5Z51A	5147A
1.5Z51B	5147A
1.5Z51C	5147A
1.5Z51D	5147A
1.5Z56	5148A
1.5Z56A	5148A
1.5Z56B	5148A
1.5Z56C	5148A
1.5Z56D	5148A
1.5Z62	5150A
1.5Z62A	5150A
1.5Z62B	5150A
1.5Z62C	5150A
1.5Z62D	5150A
1.5Z68	5151A
1.5Z68A	5151A
1.5Z68B	5151A
1.5Z68C	5151A
1.5Z68D	5151A
1.5Z75	5152A
1.5Z75A	5152A
1.5Z75B	5152A
1.5Z75C	5152A
1.5Z75D	5152A
1.5Z82	5153A
1.5Z82A	5153A
1.5Z82B	5153A
1.5Z82C	5153A
1.5Z82D	5153A
1.5Z91	5155A
1.5Z91A	5155A
1.5Z91B	5155A
1.5Z91C	5155A
1.5Z91D	5155A
1.5Z100	5156A
1.5Z100A	5156A
1.5Z100B	5156A
1.5Z100C	5156A
1.5Z100D	5156A
1.5Z110	5157A
1.5Z110A	5157A
1.5Z110B	5157A
1.5Z110C	5157A
1.5Z110D	5157A
1.5Z120	5158A
1.5Z120A	5158A
1.5Z120B	5158A
1.5Z120C	5158A
1.5Z120D	5158A
1.5Z130	5159A
1.5Z130A	5159A
1.5Z130B	5159A
1.5Z130C	5159A
1.5Z130D	5159A
1.5Z140	5160A
1.5Z140A	5160A
1.5Z140B	5160A
1.5Z140C	5160A
1.5Z140D	5160A
1.5Z150	5161A
1.5Z150A	5161A
1.5Z150B	5161A
1.5Z150C	5161A
1.5Z150D	5161A
1.5Z160	5162A
1.5Z160A	5162A
1.5Z160B	5162A
1.5Z160C	5162A
1.5Z160D	5162A
1.5Z180	5164A
1.5Z180A	5164A
1.5Z180B	5164A
1.5Z180C	5164A
1.5Z180D	5164A
1.5Z200	5166A
1.5Z200A	5166A
1.5Z200B	5166A
1.5Z200C	5166A
1.5Z200D	5166A
1-00030-010	117
1-00004-064	519
1-00006-003	123AP
1-00006-007	109
1-00006-281	519
1-000-099-00	7490
1-0002-0001	519
1-0002-001	519
1-0006-0021	123AP
1-0006-0022	123AP
1-0006-0023	159
1-00011-043	139A
1-00032-027	103A
1-00038-008	519
1-001-003-15	123AP
1-001/2207	177
1-002	130
1-003	130
1-014/2207	177
1-016	109
1-017	109
1-034/2207	159
1-035/2207	128
1-037/2207	109
1-041/2207	108
1-042/2207	123AP
1-043/2207	159
1-044/2207	123AP
1-021151	124
1-021162	124
1-021221	128
1-021270	130
1-021280	181
1-021290	128
1-20-001-890	116
1-20-001890	116
1-21-73	100
1-21-74	100
1-21-75	100
1-21-76	100
1-21-78	100
1-21-83	100
1-21-91	100
1-21-92	100
1-21-93	100
1-21-95	102A
1-21-96	102A
1-21-100	100
1-21-102	100
1-21-103	100
1-21-104	100
1-21-105	100
1-21-106	102A
1-21-107	102A
1-21-120	102A
1-21-128	100
1-21-135	160
1-21-137	160
1-21-138	126
1-21-139	160
1-21-148	102A
1-21-150	160
1-21-157	160
1-21-161	100
1-21-162	100
1-21-164	102A
1-21-179	100
1-21-180	100
1-21-184	102A
1-21-186	100
1-21-189	126
1-21-190	160
1-21-191	102A
1-21-192	102A
1-21-225	102A
1-21-226	102A
1-21-227	102A
1-21-228	160
1-21-229	160
1-21-230	160
1-21-231	160
1-21-232	102A
1-21-233	160
1-21-234	100
1-21-235	100
1-21-236	100
1-21-240	100
1-21-241	100
1-21-242	126
1-21-243	126
1-21-244	126
1-21-246	102A
1-21-254	100
1-21-256	160
1-21-257	126
1-21-258	160
1-21-259	160
1-21-260	160
1-21-266	102A
1-21-267	102A
1-21-270	121
1-21-271	121
1-21-272	102A
1-21-273	100
1-21-274	102A
1-21-275	100
1-21-276	123AP
1-21-277	123AP
1-21-278	123AP
1-21-279	123AP
1-21-289	100
1-101	116
1-210	136A
1-232-680-11	5013A
1-235-971-12	801
1-425-636	109
1-506-319	156
1-530-012-11	116
1-531-016	116
1-531-024	167
1-531-027	116
1-531-028	503
1-531-028-21	503
1-531-036-11	118
1-531-5-11	116
1-531-105	116
1-531-105-11	116
1-531-105-13	116
1-531-106	116
1-531-106-17	116
1-531-106-13	116
1-531-10513	116
1-534-105-13	116
1-534-106-13	116
1-590-1261	7440
1-759-132-40	987
1-800-662-11	1185
1-801-003	123AP
1-801-003-13	108
1-801-003-14	108
1-801-003-12	108
1-801-003-15	108
1-801-004	123AP
1-801-004-17	123AP
1-801-005	158
1-801-005-23	102A
1-801-006	158
1-801-006-14	102A
1-801-006-12	102A
1-801-009-11	5651
1-801-099-11	6403
1-801-301-13	124
1-801-301-15	124
1-801-301-14	124
1-801-304-15	107
1-801-305-13	108
1-801-306	108
1-801-306-13	108
1-801-306-15	108
1-801-306-14	108
1-801-308	102A
1-801-308-24	102A
1-801-309	103A
1-801-310	158
1-801-314	123AP
1-801-314-15	123AP
1-801-314-16	123AP
1-805-105-11	1096
1-806-549-41	558
1-808-592-11	580
1-2114-0	128
1-6732	196
1-8259	116
1-12689	109
1-13989	519
1-16549	177
1-18341	614
1-20363	139A
1-20398	140A
1-79990A	128
1-464607-3	532
1-464607-5	532
1-464860-1	532
1-464865-1	532
1-466860-1	532
1-522210111	102A
1-522210111	102A
1-522210131	160
1-522210300	160
1-522210921	160
1-522211021	160
1-522211200	102A
1-522211328	102A
1-522211921	160
1-522214400	160
1-522214411	160
1-522214435	160
1-522214821	160
1-522214831	160
1-522216500	102A
1-522216600	160
1-522217400	160
1-522223720	123AP
1-6147191229	123AP
1-6171191368	123AP
1-6207190405	102A
1-6501190016	116
1-B527-062	113A
1-DI-007	177
1-DI-009	109
1-RE-004	116
1-TD-2684	102A
1-TR-046	108
1-TR-048	107
1-TR-111	102A
1-TR-112	103A
1/042/2207	123AP
1/2Z2TT5	146A
1/2Z3.9T5	5007A
1/2Z3.6T5	5006A
1/2Z3.3T5	5005A
1/2Z4.3T5	5008A
1/2Z4.7T5	5009A
1/2Z5.6T5	5011A
1/2Z5.1T5	5010A
1/2Z6.2T5	5013A
1/2Z6.8T5	5014A
1/2Z6.5T5	136A
1/2Z7.5T5	5015A
1/2Z8.2T5	5016A
1/2Z9.1T5	5018A
1/2Z10T5	5019A
1/2Z11T5	5020A
1/2Z12T5	504
1/2Z13T5	5022A
1/2Z15T5	5024A
1/2Z16T5	5025A
1/2Z18T5	5027A
1/2Z20T5	5029A
1/2Z22T5	5030A
1/2Z24T5	5031A
1/2Z27T5	5033A
1/2Z30T5	5035A
1/2Z33T5	140A
1/2Z36T5	5037A
1/2Z39T5	5038A
1/2Z43T5	5039A
1/2Z47T5	5040A
1/2Z51T5	5041A
1/2Z56T5	5042A
1/2Z62T5	5044A
1/2Z68T5	5045A
1/2Z75T5	5046A
1/2Z82T5	5047A
1/2Z91T5	5049A
1/2Z100T5	5050A
1/2Z105T5	140A
1/2Z276.5T5	139A
1/4A6.8	5014A
1/4A6.8A	5014A
1/4A6.8B	5014A
1/4A7.5	5015A
1/4A7.5A	5015A
1/4A8.2B	5016A
1/4A8.2A	5016A
1/4A8.2	5016A
1/4A9.1A	139A
1/4A9.1B	139A
1/4A9.1	139A
1/4A10	140A
1/4A10A	140A
1/4A10B	140A
1/4A11	5020A
1/4A11A	5020A
1/4A11B	5020A
1/4A12	142A
1/4A12A	142A
1/4A12B	142A
1/4A13	5022A
1/4A13A	5022A
1/4A13B	5022A
1/4A14	144A
1/4A14A	144A
1/4A14B	144A
1/4A15	145A
1/4A15A	145A
1/4A15B	145A
1/4A16	5025A
1/4A16A	5025A
1/4A17	5026A
1/4A17A	5026A
1/4A17B	5026A
1/4A18	5027A
1/4A18A	5027A
1/4A18B	5027A
1/4A19	5028A
1/4A19A	5028A
1/4A19B	5028A
1/4A20	5029A
1/4A20A	5029A
1/4A20B	5029A
1/4A22	5030A
1/4A22A	5030A
1/4A22B	5030A
1/4A24	5031A
1/4A24A	5031A
1/4A24B	5031A
1/4A25	5032A
1/4A25A	5032A
1/4A25B	5032A
1/4A27	146A
1/4A27A	146A
1/4A27B	146A
1/4A30	5035A
1/4A30A	5035A
1/4A30B	5035A
1/4A33	147A
1/4A33A	147A
1/4A33B	147A
1/4A36	5037A
1/4A36A	5037A
1/4A36B	5037A
1/4A39	5038A
1/4A39A	5038A
1/4A39B	5038A
1/4A43	5039A
1/4A43A	5039A
1/4A43B	5039A
1/4A47	5040A
1/4A47A	5040A
1/4A47B	5040A
1/4A56	5042A
1/4A56A	5042A
1/4A56B	5042A
1/4A62	149A
1/4A62A	149A
1/4A62B	149A
1/4A62V	149A
1/4A68	5045A
1/4A68A	5045A
1/4A68B	5045A
1/4A75	5046A
1/4A75A	5046A
1/4A75B	5046A
1/4A82	150A
1/4A82A	150A
1/4A82B	150A
1/4A91	5049A
1/4A91A	5049A
1/4A91B	5049A
1/4A100	5050A
1/4A100A	5050A
1/4A100B	5050A
1/4A110	151A
1/4A110A	151A
1/4A110B	151A
1/4A120	5052A
1/4A120A	5052A
1/4A120B	5052A
1/4A130	5053A
1/4A130A	5053A
1/4A130B	5053A
1/4A140	5054A
1/4A140A	5054A
1/4A140B	5054A
1/4A150	5055A
1/4A150A	5055A
1/4A150B	5055A
1/4A200	5060A
1/4A200A	5060A
1/4A200B	5060A
1/4AZ2.4D	5000A
1/4AZ2.4D10	5000A
1/4AZ2.4D5	5000A
1/4AZ2.7D	5002A
1/4AZ2.7D10	5002A
1/4AZ2.7D5	5002A
1/4AZ3.0D	5004A
1/4AZ3.0D10	5004A
1/4AZ3.0D5	5004A
1/4AZ3.9D5	5007A
1/4AZ3.6D5	5006A
1/4AZ3.3D	5005A
1/4AZ3.3D10	5005A
1/4AZ3.9D10	5007A
1/4AZ3.6D10	134A
1/4AZ3.6D	5006A
1/4AZ3.9D	5007A
1/4AZ3.3D5	5005A
1/4AZ4.3D5	5008A
1/4AZ4.7D10	5009A
1/4AZ4.7D5	5009A
1/4AZ4.3D	5008A
1/4AZ4.3D10	5008A
1/4AZ4.7D	5009A
1/4AZ5.1D	135A
1/4AZ5.6D10	5011A
1/4AZ5.6D5	136A
1/4AZ5.1D10	5010A
1/4AZ5.1D5	135A
1/4AZ5.6D	5011A
1/4AZ6.2D	5013A
1/4AZ6.8D10	5014A
1/4AZ6.2D10	5013A
1/4AZ6.8D	5014A
1/4AZ6.8D5	5014A
1/4AZ6.2D5	137A
1/4AZC3.6D5	134A
1/4LZ2.7D10	5002A
1/4LZ2.4D5	5000A
1/4LZ2.4D	5000A
1/4LZ2.7D	5002A
1/4LZ2.7D5	5002A
1/4LZ2.4D10	5000A
1/4LZ3.0D5	5004A
1/4LZ3.0D	5004A
1/4LZ3.0D10	5004A
1/4LZ3.9D5	5007A
1/4LZ3.6D	102
1/4LZ3.6D10	5006A
1/4LZ3.6D5	102
1/4LZ3.3D5	5005A
1/4LZ3.3D	5005A
1/4LZ3.9D	5007A
1/4LZ3.3D10	5005A
1/4LZ3.9D10	5007A
1/4LZ4.7D5	5009A
1/4LZ4.3D10	5008A
1/4LZ4.3D5	5008A
1/4LZ4.7D10	5009A
1/4LZ4.3D	5008A
1/4LZ4.7D	5009A
1/4LZ5.1D	5010A
1/4LZ5.1D10	5010A
1/4LZ5.6D	136A
1/4LZ5.6D5	136A
1/4LZ5.6D10	136A
1/4LZ5.1D5	5010A
1/4LZ6.8D5	5014A
1/4LZ6.2D5	137A
1/4LZ6.2D	137A
1/4LZ6.2D10	5013A
1/4LZ6.8D10	5014A
1/4LZ6.8D	5014A
1/4M2.4AZ10	5000A
1/4M2.4AZ5	5000A
1/4M2.7AZ	5002A
1/4M2.7AZ10	5002A
1/4M2.7AZ5	5002A
1/4M2.4AZ	5000A
1/4M3.0AZ10	5004A
1/4M3.0AZ	5004A
1/4M3.0AZ5	5004A
1/4M3.9AZ10	5007A
1/4M3.3AZ5	5005A
1/4M3.3AZ	5005A
1/4M3.9AZ	5007A
1/4M3.3AZ10	5005A
1/4M3.9AZ5	5007A
1/4M3.6AZ	5006A
1/4M3.6AZ5	5006A
1/4M3.6AZ10	5006A
1/4M4.7AZ	5009A
1/4M4.3AZ	5008A
1/4M4.7AZ10	5009A

PART NUMBER	NTE REPLACEMENT
1/4M4.3AZ5	5008A
1/4M4.3AZ10	5008A
1/4M4.7AZ5	5009A
1/4M5.1	5010A
1/4M5.6AZ2	5011T1
1/4M5.1AZ5	5010A
1/4M5.1AZ1	5010T1
1/4M5.6AZ	136A
1/4M5.6AZ25	136A
1/4M5.6AZ5	5011A
1/4M5.1AZ	5010A
1/4M5.1AZ25	135A
1/4M5.1A7Z	5010T1
1/4M5.6AZ1	5011T1
1/4M5.6AZ10	5011A
1/4M5.1AZ10	5010A
1/4M6.2AZ5	5013A
1/4M6.8Z	5014A
1/4M6.8AZ	5014A
1/4M6.8Z10	5014A
1/4M6.8AZ10	5014A
1/4M6.8Z5	5014A
1/4M6.2AZ	5013A
1/4M6.8AZ5	5014A
1/4M6.2AZ10	5013A
1/4M6.2AZ2	5013T1
1/4M6.2AZ1	5013T1
1/4M7.5Z	5015A
1/4M7.5Z10	5015A
1/4M7.5Z5	5015A
1/4M8.2Z5	5016A
1/4M8.2Z10	5016A
1/4M8.2Z	5016A
1/4M8/27	5016A
1/4M9.1Z10	5018A
1/4M9.1Z5	5018A
1/4M9.1Z	5018A
1/4M10Z	5019A
1/4M10Z1	5019T1
1/4M10Z5	5019A
1/4M10Z10	5019A
1/4M11Z	5020A
1/4M11Z5	5020A
1/4M11Z10	5020A
1/4M12Z	5021A
1/4M12Z5	5021A
1/4M12Z1	5021T1
1/4M12Z2	5021T1
1/4M12Z10	5021A
1/4M13Z	5022A
1/4M13Z5	143A
1/4M13Z10	5022A
1/4M14	144A
1/4M14Z	5023A
1/4M14Z5	144A
1/4M14Z10	5023A
1/4M15Z	5024A
1/4M15Z5	5024A
1/4M15Z10	145A
1/4M16Z	5025A
1/4M16Z5	5025A
1/4M16Z10	5025A
1/4M17Z10	5026A
1/4M18Z	5027A
1/4M18Z5	5077A
1/4M18Z10	5027A
1/4M19Z	5028A
1/4M19Z10	5028A
1/4M20Z	5029A
1/4M20Z10	5029A
1/4M22Z	5030A
1/4M22Z10	5030A
1/4M24Z	5031A
1/4M24Z5	5031A
1/4M24Z10	5031A
1/4M25Z5	5032A
1/4M25Z10	5032A
1/4M27Z	5033A
1/4M27Z5	146A
1/4M27Z10	5033A
1/4M30Z	5035A
1/4M30Z10	5035A
1/4M33Z	5036A
1/4M33Z5	5036A
1/4M33Z10	5036A
1/4M36Z	5037A
1/4M36Z5	5037A
1/4M36Z10	5037A
1/4M39Z	5038A
1/4M39Z10	5038A
1/4M43Z	5038A
1/4M43Z10	5039A
1/4M60Z10	5045A
1/4M62Z	149A
1/4M62Z5	149A
1/4M62Z10	5071A
1/4M62Z100	149A
1/4M68.Z10	5071A
1/4M75Z	5046A
1/4M82Z	5047A
1/4M82Z5	5047A
1/4M82Z10	5047A
1/4M91Z	5049A
1/4M91Z10	5049A
1/4M100Z	5050A
1/4M100Z10	5050A
1/4M110Z	5051A
1/4M110Z5	151A
1/4M110Z10	5051A
1/4M120Z	5052A
1/4M120Z5	5052A
1/4M120Z10	5052A
1/4M130Z	5053A
1/4M130Z5	5053A
1/4M130Z10	5053A
1/4M140Z	5054A
1/4M140Z10	5054A
1/4M150Z	5055A
1/4M150Z5	5055A
1/4M150Z10	5055A
1/4M160Z	5056A
1/4M160Z5	5056A
1/4M160Z10	5056A
1/4M172	5026A
1/4M175Z	5057A
1/4M175Z5	5057A
1/4M175Z10	5057A
1/4M180	5058A
1/4M180Z	5058A
1/4M180Z5	5058A
1/4M180Z10	5058A
1/4M200Z	5060A
1/4M200Z5	5060A
1/4M200Z10	5060A
1/4M227	5080A
1/4M472	5000A
1/4M1072	5019T1
1/4M3025	5084A
1/4Z5.1T5	5010A
1/4Z5.6T5	5011A
1/4Z6.2T5	5013A
1/4Z6.8D	5014A
1/4Z6.8D10	5014A
1/4Z6.8D5	5014A
1/4Z7.5D	5015A
1/4Z7.5D10	5015A
1/4Z7.5D5	5015A
1/4Z8.2D	5016A
1/4Z8.2D5	5016A
1/4Z8.2D10	5016A
1/4Z9.1D	5018A
1/4Z9.1D10	5018A
1/4Z9.1D5	5018A
1/4Z10D	5019A
1/4Z10D5	5019A
1/4Z10D10	5019A
1/4Z11D	5020A
1/4Z11D5	5020A
1/4Z11D10	5020A
1/4Z12D	5021A
1/4Z12D5	5021A
1/4Z12D10	5021A
1/4Z12T5	142A
1/4Z13D	5022A
1/4Z13D5	5022A
1/4Z14D	144A
1/4Z14D5	144A
1/4Z14D10	144A
1/4Z15D5	145A
1/4Z15D10	145A
1/4Z15T5	5024A
1/4Z16D	5025A
1/4Z16D5	5025A
1/4Z16D10	5025A
1/4Z17D	5026A
1/4Z17D5	5026A
1/4Z17D10	5026A
1/4Z18D	5027A
1/4Z18D5	5027A
1/4Z18D10	5027A
1/4Z19D	5028A
1/4Z19D5	5028A
1/4Z19D10	5028A
1/4Z20D5	5029A
1/4Z20D10	5029A
1/4Z22D	5030A
1/4Z22D5	5030A
1/4Z22D10	5030A
1/4Z24D	5031A
1/4Z24D5	5031A
1/4Z24D10	5031A
1/4Z25D	5032A
1/4Z25D5	5032A
1/4Z25D10	5032A
1/4Z27D	146A
1/4Z27D5	146A
1/4Z27D10	146A
1/4Z27T5	5033A
1/4Z30D	5035A
1/4Z30D5	5035A
1/4Z30D10	5035A
1/4Z33D	147A
1/4Z33D5	147A
1/4Z33D10	147A
1/4Z33T5	5036A
1/4Z36D	5037A
1/4Z36D5	5037A
1/4Z36D10	5037A
1/4Z39D	5038A
1/4Z39D5	5038A
1/4Z39D10	5038A
1/4Z39T5	5039A
1/4Z43D	5039A
1/4Z43D5	5039A
1/4Z43D10	5039A
1/4Z47D	5040A
1/4Z47D5	5040A
1/4Z47D10	5040A
1/4Z51D	5041A
1/4Z51D5	5041A
1/4Z51D10	5041A
1/4Z56D	5042A
1/4Z56D5	5042A
1/4Z56D10	5042A
1/4Z62D	149A
1/4Z62D5	149A
1/4Z62D10	149A
1/4Z62T5	5044A
1/4Z68D	5045A
1/4Z68D5	5045A
1/4Z68D10	5045A
1/4Z75D	5046A
1/4Z82D	150A
1/4Z82D5	5047A
1/4Z82D10	150A
1/4Z82T5	5047A
1/4Z91D	5049A
1/4Z91D5	5049A
1/4Z91D10	5049A
1/4Z100D	5050A
1/4Z100D5	5050A
1/4Z100D10	5050A
1/4Z110D	151A
1/4Z110D5	151A
1/4Z110D10	151A
1/4Z120D	5052A
1/4Z120D5	5052A
1/4Z120D10	5052A
1/4Z130D	5053A
1/4Z130D5	5053A
1/4Z130D10	5053A
1/4Z140D	5054A
1/4Z140D5	5054A
1/4Z140D10	5054A
1/4Z150D	5055A
1/4Z150D5	5055A
1/4Z150D10	5055A
1/4Z160D	5056A
1/4Z160D5	5056A
1/4Z160D10	5056A
1/4Z180D	5058A
1/4Z180D10	5058A
1/4Z200D	5060A
1/4Z200D5	5060A
1/4Z200D10	5060A
1/4Z220D	5029A
1/47M.1AZ5	135A
1/276.5T5	138A
1/M25Z	5032A
1,000,111-00	159
1A0020	123AP
1A0070	123AP
1A0080	123AP
1A0013	199
1A0021	123AP
1A0022	123AP
1A0024	123AP
1A0025	123AP
1A0027	175
1A0029	123AP
1A0032	123AP
1A0033	123AP
1A0034	123AP
1A0035	123AP
1A0037	123AP
1A0038	124
1A0043	123AP
1A0044	123AP
1A0045	123AP
1A0046	152
1A0048	175
1A0051	123AP
1A0055	102A
1A0056	102A
1A0058	152
1A0059	152
1A0063	123AP
1A0066	128
1A0067	123AP
1A0076	123AP
1A0077	123AP
1A0078	123AP
1A0079	123AP
1A0081	123AP
1A0083	123AP
1A0084	123AP
1A0909	285
1A01	128
1A02	129
1A03	16005
1A04	16004
1A05	129
1A06	128
1A07	128
1A08	129
1A09	396
1A7.5M	138A
1A7.5MA	138A
1A8-1A82	160
1A9.1M	139A
1A9.1MA	139A
1A10M	140A
1A10MA	140A
1A11	396
1A12M	142A
1A12MA	142A
1A13	396
1A13M	143A
1A13MA	143A
1A15	396
1A15M	145A
1A15MA	145A
1A16	191
1A17	128
1A18	128
1A19	129
1A27M	146A
1A27MA	146A
1A33M	147A
1A33MA	147A
1A34	128
1A34(R)	192
1A34(TV)	109
1A34R	128
1A35	519
1A38	192
1A38(R)	192
1A38R	192
1A50	116
1A52	5000A
1A53	5002A
1A54	5004A
1A55	5005A
1A56	5006A
1A56M	148A
1A56MA	148A
1A57	5007A
1A58	5008A
1A59	5009A
1A60	5010A
1A61	5011A
1A62	5013A
1A62M	149A
1A62MA	149A
1A82M	150A
1A82MA	150A
1A110M	151A
1A110MA	151A
1A348	128
1A348(R)	192
1A348R	128
1A493	5126A
1A4757-1	123AP
1A10425	116
1A10952	116
1A11184	116
1A11306	109
1A11671	116
1A12214	116
1A12407	116
1A12687	614
1A12688	139A
1A12689	109
1A12690	116
1A13219	116
1A13719	116
1A13720	116
1A14384	109
1A15790	116
1A16549	177
1A16550	116
1A16551	177
1A69425-1	519
1A99812-1001	519
1A1123100-1	181
1AC12	142A
1AC12A	142A
1AC12B	142A
1AC15	145A
1AC15A	145A
1AC15B	145A
1AC27	146A
1AC27A	146A
1AC27B	146A
1AC33	147A
1AC33A	147A
1AC33B	147A
1AC62	149A
1AC62A	149A
1AC62B	149A
1AC82	150A
1AC82A	150A
1AC82B	150A
1AC110	151A
1AC110A	151A
1AC110B	151A
1AMH2	525
1AS027	156
1AS029	156
1AU3	508
1B	504
1B05310	281
1B01	328
1B04	162
1B05	166
1B05J05	166
1B05J20	116
1B05J40	116
1B06	280
1B07	243
1B08	244
1B08T05	166
1B08T10	166
1B08T20	167
1B09	283
1B1	166
1B1.1	5304
1B2	167
1B2.K	5304
1B2C1	113A
1B2Z1	116
1B2Z1AY	116
1B3	508
1B3.C	5304
1B4	168
1B4.1	5304
1B4B1	5304
1B4B41	166
1B4B42	5332
1B6	169
1B8	170
1B10	170
1B10J20	116
1B759	142A
1B2992	519
1B3096-1	159
1B12421	5882
1B-2C1	116
1BZ61	116
1BZ61-A	116
1BZ61-B	116
1BZ61-C	116
1BZ61-D	116
1BZ61-K	116
1BZ61-L	116
1BZ61-OR	116
1BZ61-Y	116
1C0009	116
1C0020	138A
1C0017	116
1C0025	116
1C0026	116
1C0029	109
1C0031	116
1C0038	5071A
1C0039	109
1C03	291
1C04	197
1C05	116
1C06	197
1C07	182
1C08	183
1C09	152
1C1	116
1C2	116
1C4	116
1C6	116
1C8	125
1C10	125
1C11	197
1C12Z	142A
1C12ZA	142A
1C14	196
1C15	712
1C15Z	145A
1C15ZA	145A
1C16	264
1C17	746
1C18	747
1C26	712
1C27Z	146A
1C27ZA	146A
1C33Z	147A
1C33ZA	147A
1C62Z	149A
1C62ZA	149A
1C82Z	150A
1C82ZA	150A
1C91	703
1C110Z	151A
1C110ZA	151A
1C202	747
1C311	730
1C504	708
1C505	709
1C507	1045
1C509	714
1C513	722
1C3576	123AP
1C25681	529
1C73045	235
1C744005	161
1C744006	293
1C744009	236
1C-24	1003
1C-30	799
1C-101	172A
1C-112	1080
1C-142	712
1C-507	1003
1CL-101-TY	1171
1CL-101A-TY	1171
1CL-201-TY	1171
1CL-301A-PA	1171
1CL-301A-TY	1171
1CL-748-TY	1171
1D02560	152
1D08	145A
1D059	102A
1D098-001V-022	177
1D02591	291
1D1	116
1D2	116
1D2C1	125
1D2C1LC2	125
1DZ1	116
1D3.3	5066A
1D3.3A	5066A
1D3.3B	5066A
1D3.6	134A
1D3.6A	134A
1D3.6B	134A
1D3.9	5067A
1D3.9A	5067A
1D3.9B	5067A
1D4.3	5068A
1D4.3A	5068A
1D4.3B	5068A
1D4.7	5069A
1D4.7A	5069A
1D4.7B	5069A
1D4B2	5332
1D4B42	5332
1D5.1	135A
1D5.1A	135A
1D5.1B	135A
1D5.6	136A
1D5.6A	136A
1D5.6B	136A
1D6	116
1D6.2	137A
1D6.2A	137A
1D6.2B	137A
1D6.2SA	137A
1D6.2SB	137A
1D8	125
1D10	125
1D27Z5	146A
1D100	5402
1D101	5402
1D102	5402
1D103	5404
1D104	5404
1D261	116
1DA1Z8.2B	5072A
1DA1Z8.2C	5072A
1DA1Z8.2A	5072A
1DA1Z8.2O	5072A
1DA1Z18B	5077A
1DAZ3401	5072A
1DAZ3401A	5072A
1DAZ3401B	5072A
1DAZ3401C	5072A
1DAZ3401O	5072A
1DAZ3405B	5077A
1DC1	116
1DG2	109
1DZ12	142A
1DZ61	116
1DZ61-A	116
1DZ61-B	116
1DZ61-C	116
1DZ61-D	116
1DZ61-K	116
1DZ61-L	116
1DZ61-OR	116
1DZ61-Y	116
1DZ120	5097A
1E02	116
1E05	116
1E1	116
1E2	116
1E2Z5	142A
1E3	116
1E4	116
1E5	116
1E6	116
1E7	125
1E7.5Z	138A
1E7.5Z10	138A
1E8	125
1E9.1Z	139A
1E9.1Z10	139A
1E10	125
1E10Z	140A
1E10Z10	140A
1E11Z	141A
1E11Z10	141A
1E12Z	142A
1E12Z5	142A
1E12Z10	142A
1E14Z	144A
1E14Z5	144A
1E14Z10	144A
1E15Z	145A
1E15Z5	145A
1E15Z10	145A
1E27Z	146A
1E27Z5	146A
1E27Z10	146A
1E33Z	147A
1E33Z5	147A
1E33Z10	147A
1E62Z	149A
1E62Z5	149A
1E62Z10	149A
1E82Z	150A
1E82Z5	150A
1E82Z10	150A
1E110Z	151A
1E110Z5	151A
1E110Z10	151A
1E535A	229
1E535A/7825B	229
1E535B	107
1E703E	703
1E-1	128
1E-9A	160
1EA10A	117
1EA20A	117
1EA20D5	5079A
1EA30A	117
1EA40A	117
1EA50A	117
1EA60A	117
1EA70A	125
1EA80A	125
1EA100A	125
1EB10A	5872
1EB20A	5874
1EB30A	5876
1EB40A	5878
1EB50A	5862
1EB60A	5882
1EB70A	5886
1EB80A	5886
1EB100A	5890
1ER100A	5890
1ET02	116
1ET05	116
1ET1	116
1ET2	116
1ET3	116
1ET4	116
1ET5	116
1ET6	116
1ET7	125
1ET8	125
1ET10	125
1EZ3.3D	5066A
1EZ3.3D5	5066A
1EZ3.3D10	5066A
1EZ3.3T10	5066A
1EZ3.6	134A
1EZ3.6D	134A
1EZ3.6D5	134A
1EZ3.6D10	134A
1EZ3.6T10	134A
1EZ3.9D	5067A
1EZ3.9D5	5067A
1EZ3.9D10	5067A
1EZ3.9T10	5067A
1EZ3.610	134A
1EZ4.3D	5068A
1EZ4.3D5	5068A
1EZ4.3D10	5068A
1EZ4.7D	5069A
1EZ4.7D5	5069A
1EZ4.7D10	5069A
1EZ4.7T10	5069A
1EZ5.1	135A
1EZ5.1D	135A
1EZ5.1D5	135A
1EZ5.1D10	135A
1EZ5.1T10	135A
1EZ5.6	136A
1EZ5.6D	136A
1EZ5.6D5	136A
1EZ5.6D10	136A
1EZ5.6T10	136A
1EZ6.2D	137A
1EZ6.2D5	137A
1EZ6.2D10	137A
1EZ6.2T10	137A
1EZ6.8D	5071A
1EZ6.8D5	5071A
1EZ6.8D10	5071A
1EZ6.8T10	5071A
1EZ7.5D	138A
1EZ7.5D5	138A
1EZ7.5D10	138A
1EZ7.5T10	138A
1EZ7.5Z	138A
1EZ8.1D5	139A
1EZ8.2D	5072A
1EZ8.2D5	5072A
1EZ8.2D10	5072A
1EZ8.2T10	5072A
1EZ9.1	139A
1EZ9.1D	139A
1EZ9.1D5	139A
1EZ9.1D10	139A
1EZ9.1T10	139A
1EZ10D	140A
1EZ10D5	140A
1EZ10D10	140A
1EZ10T10	140A
1EZ11D	5074A
1EZ11D5	5074A
1EZ11D10	5074A
1EZ11T10	5074A
1EZ12	142A
1EZ12D	142A
1EZ12D5	142A
1EZ12D10	142A
1EZ12T10	142A
1EZ13D	143A
1EZ13D5	143A
1EZ13D10	143A
1EZ13T10	143A
1EZ14D	144A
1EZ14D10	144A
1EZ15	145A
1EZ15D	145A
1EZ15D5	145A
1EZ15D10	145A
1EZ15T10	145A
1EZ16D	5075A
1EZ16D5	5075A
1EZ16D10	5075A
1EZ16T10	5075A
1EZ17D	5076A
1EZ17D5	5076A
1EZ17D10	5076A
1EZ18D	5077A
1EZ18D5	5076A
1EZ18D10	5077A
1EZ18T10	5077A
1EZ19D	5078A
1EZ19D10	5078A
1EZ20D	5079A
1EZ20D10	5079A
1EZ20T10	5079A
1EZ22D	5080A
1EZ22D5	5080A
1EZ22D10	5080A
1EZ22T10	5080A
1EZ24D	5081A
1EZ24D5	5081A
1EZ24D10	5081A
1EZ24T10	5081A
1EZ27	146A
1EZ27D	146A
1EZ27D5	146A
1EZ27D10	146A
1EZ27DT10	146A
1EZ30D	5084A
1EZ30D5	5084A
1EZ30D10	5084A

PART NUMBER	NTE REPLACEMENT
1EZ30T10	5084A
1EZ33D	147A
1EZ33D5	147A
1EZ33D10	147A
1EZ36D	5085A
1EZ36D5	5085A
1EZ36D10	5085A
1EZ39D	5086A
1EZ39D5	5086A
1EZ39D10	5086A
1EZ43D	5087A
1EZ43D5	5087A
1EZ43D10	5087A
1EZ47D	5088A
1EZ47D5	5088A
1EZ47D10	5088A
1EZ51D	5089A
1EZ51D5	5089A
1EZ51D10	5089A
1EZ56D	5090A
1EZ56D5	5090A
1EZ56D10	5090A
1EZ62D	149A
1EZ62D5	149A
1EZ62D10	149A
1EZ68D	5092A
1EZ68D5	5092A
1EZ68D10	5092A
1EZ75D	5093A
1EZ75D5	5093A
1EZ75D10	5093A
1EZ82D	150A
1EZ82D5	150A
1EZ82D10	150A
1EZ91D	5095A
1EZ91D5	5095A
1EZ91D10	5095A
1EZ100D	5096A
1EZ100D5	5096A
1EZ100D10	5096A
1EZ110D	151A
1EZ110D5	151A
1EZ110D10	151A
1EZ120D	5097A
1EZ120D10	5097A
1EZ130D	5098A
1EZ130D5	5098A
1EZ130D10	5098A
1EZ140D	5099A
1EZ140D5	5099A
1EZ140D10	5099A
1EZ150D	5100A
1EZ150D5	5100A
1EZ150D10	5100A
1EZ160D	5101A
1EZ160D5	5101A
1EZ160D10	5101A
1EZ170D	5102A
1EZ170D10	5102A
1EZ180D	5103A
1EZ180D5	5103A
1EZ180D10	5103A
1EZ190D	5104A
1EZ190D10	5104A
1EZ200D	5105A
1EZ200D5	5104A
1EZ200D10	5105A
1EZ1905	5104A
1EZ-5Z10	138A
1F00063	5080A
1F05	116
1F2	116
1F8	125
1F10	125
1F14A	116
1FM2	116
1G001240	4011B
1G002380	4023B
1G028200	1327
1G038300	1337
1G01	109
1G02	109
1G2C1	125
1G2Z	116
1G2Z1	125
1G3	508
1G4B41	168
1G8	125
1G25	109
1G86	109
1G100	105
1GA	116
1GD2	109
1GD4	109
1GD5	614
1GD5X	109
1GD6	109
1GD10	109
1GH11F-FA	506
1GH62	506
1GSTK5431SL	1733
1GWJ43	585
1GZ61	116
1GZ61-A	116
1GZ61-B	116
1GZ61-C	116
1GZ61-D	116
1GZ61-K	116
1GZ61-L	116
1GZ61-OR	116
1GZ61-Y	116
1GZZ1	116
1H00031	5883
1H00052	6026
1HC-10F	116
1HC-10R	116
1HC-15F	116
1HC-15R	116
1HC-20F	116
1HC-20R	116
1HC-25F	116
1HC-25R	116
1HC-30F	116
1HC-30R	116
1HC-40F	116
1HC-40R	116
1HC-50F	116
1HC-50R	116
1HC-60F	116
1HC-60R	116
1HC-80F	125
1HC-80R	125
1HC-100F	125
1HC-100R	125
1HC-120F	506
1HC-120R	506
1HHA11715	1554
1HY40	116
1HY50	116
1HY80	125
1HY100	125
1J1	123AP
1J3	508
1J4B41	169
1JA16	121
1JH11F	116
1JH62	506
1JL50	116
1JL51	116
1JL52	116
1JL53	116
1JL56	116
1JL57	116
1JL58	125
1JL59	125
1JL63	125
1JL64	125
1JZ6	116
1JZ61	125
1JZ61-A	116
1JZ61-B	116
1JZ61-C	116
1JZ61-D	116
1JZ61-K	116
1JZ61-L	116
1JZ61-OR	116
1JZ61-Y	116
1K2	5802
1K3	508
1K34A	109
1K60	109
1K60A	109
1K60P	109
1K60R	109
1K60RF	109
1K90	109
1K110	109
1K188	109
1K188F	109
1K188FM	109
1K188FM-1	109
1K261	109
1K-3.5E	134A
1KF20-04	109
1L5.6U	5011A
1LE11	156
1LE11-A	125
1LE11-B	125
1LE11-C	125
1LE11-D	125
1LE11-K	125
1LE11-L	125
1LE11-OR	125
1LE11-Y	125
1LE11A	125
1LE11B	125
1LE11C	125
1LE11D	125
1LE11K	125
1LE11L	125
1LE11R	125
1LE11Y	125
1LF11	156
1LZ61	125
1LZ61-A	125
1LZ61-B	125
1LZ61-C	125
1LZ61-D	125
1LZ61-K	125
1LZ61-L	125
1LZ61-OR	125
1LZ61-Y	125
1M3.3AZ3	5005A
1M3.3AZ10	5066A
1M3.3Z	5066A
1M3.3Z5	5066A
1M3.3ZS5	5066A
1M3.3ZS10	5066A
1M3.6AZ5	134A
1M3.6AZ3	134A
1M3.6AZ10	134A
1M3.6Z	134A
1M3.6Z5	134A
1M3.6Z10	134A
1M3.6ZS	134A
1M3.6ZS5	134A
1M3.6ZS10	134A
1M3.9AZ10	5067A
1M3.9Z	5067A
1M3.9Z10	5067A
1M3.9ZS5	5067A
1M3.9ZS10	5067A
1M3.34Z3	5066A
1M4.3AZ10	5068A
1M4.3Z	5068A
1M4.3Z5	5068A
1M4.3Z10	5068A
1M4.3ZS5	5068A
1M4.3ZS10	5068A
1M4.7AZ10	5069A
1M4.7Z	5069A
1M4.7Z5	5069A
1M4.7Z10	5069A
1M4.7ZS5	5069A
1M4.7ZS10	5069A
1M5.1AZ3	135A
1M5.1AZ10	135A
1M5.1Z	135A
1M5.1Z5	135A
1M5.1Z10	135A
1M5.1ZS5	135A
1M5.1ZS10	135A
1M5.6AZ10	136A
1M5.6Z	136A
1M5.6Z5	136A
1M5.6Z10	136A
1M5.6ZS5	136A
1M5.6ZS10	136A
1M6.2AZ10	137A
1M6.2Z	137A
1M6.2Z5	137A
1M6.2Z10	137A
1M6.2ZS5	137A
1M6.2ZS10	137A
1M6.8AZ10	5071A
1M6.8Z	5071A
1M6.8Z5	5071A
1M6.8Z10	5071A
1M6.8ZS5	5071A
1M6.8ZS10	5071A
1M7.5AZ10	138A
1M7.5Z	138A
1M7.5Z5	138A
1M7.5Z10	138A
1M7.5ZS5	138A
1M7.5ZS10	138A
1M8.2Z	5072A
1M8.2Z5	5072A
1M8.2Z10	5072A
1M8.2ZS5	5072A
1M8.2ZS10	5072A
1M9.1Z	139A
1M9.1Z5	139A
1M9.1Z10	139A
1M9.1ZS5	139A
1M9.1ZS10	139A
1M10Z	140A
1M10Z5	140A
1M10Z10	140A
1M10ZS5	140A
1M10ZS10	140A
1M11Z	5074A
1M11Z5	5074A
1M11Z10	5074A
1M11ZS5	5074A
1M11ZS10	5074A
1M12Z	142A
1M12Z5	142A
1M12Z10	142A
1M12ZS5	142A
1M12ZS10	142A
1M13Z	143A
1M13Z5	143A
1M13Z10	143A
1M13ZS5	143A
1M13ZS10	143A
1M14OZ	5099A
1M14Z	144A
1M14Z5	144A
1M14Z10	144A
1M14ZS5	144A
1M14ZS10	144A
1M15Z	145A
1M15Z5	145A
1M15Z10	145A
1M15ZS5	145A
1M15ZS10	145A
1M16Z	5075A
1M16Z5	5075A
1M16Z10	5075A
1M16ZS5	5075A
1M16ZS10	5075A
1M17Z	5076A
1M17Z5	5076A
1M17Z10	5076A
1M17ZS5	5076A
1M17ZS10	5076A
1M18Z	5077A
1M18Z5	5077A
1M18Z10	5077A
1M18ZS5	5077A
1M18ZS10	5077A
1M19Z	5078A
1M19Z5	5078A
1M19Z10	5078A
1M19ZS5	5078A
1M19ZS10	5078A
1M20Z	5079A
1M20Z3	5079A
1M20Z5	5079A
1M20Z10	5079A
1M20Z20	5079A
1M20ZS5	5079A
1M20ZS10	5079A
1M22Z	5080A
1M22Z5	5080A
1M22Z10	5080A
1M22ZS5	5080A
1M22ZS10	5080A
1M24Z	5081A
1M24Z5	5081A
1M24Z10	5081A
1M24ZS5	5081A
1M24ZS10	5081A
1M25Z	5082A
1M25Z5	5082A
1M25Z10	5082A
1M25ZS5	5082A
1M25ZS10	5082A
1M27Z	146A
1M27Z5	146A
1M27Z10	146A
1M27ZS5	146A
1M27ZS10	146A
1M30Z	5084A
1M30Z5	5084A
1M30Z10	5084A
1M30ZS5	5084A
1M30ZS10	5084A
1M33Z	147A
1M33Z5	147A
1M33Z10	147A
1M33ZS5	147A
1M33ZS10	147A
1M36Z	5085A
1M36Z5	5085A
1M36Z10	5085A
1M36ZS5	5085A
1M36ZS10	5085A
1M39Z	5086A
1M39Z5	5086A
1M39Z10	5086A
1M39ZS5	5086A
1M39ZS10	5086A
1M43Z	5087A
1M43Z5	5087A
1M43Z10	5087A
1M43ZS5	5087A
1M43ZS10	5087A
1M47Z	5088A
1M47Z5	5088A
1M47Z10	5088A
1M47ZS5	5088A
1M47ZS10	5088A
1M51Z	5089A
1M51Z5	5089A
1M51Z10	5089A
1M51ZS5	5089A
1M51ZS10	5089A
1M55ZS5	148A
1M56Z	5090A
1M56Z5	5090A
1M56Z10	5090A
1M56ZS5	5090A
1M56ZS10	5090A
1M62Z	149A
1M62Z5	149A
1M62Z10	149A
1M62ZS5	149A
1M62ZS10	149A
1M68Z	5092A
1M68Z3	5092A
1M68Z5	5092A
1M68Z10	5092A
1M68ZS5	5092A
1M68ZS10	5092A
1M75Z	5093A
1M75Z3	5093A
1M75Z5	5093A
1M75Z10	5093A
1M75ZS5	5093A
1M75ZS10	5093A
1M82Z	150A
1M82Z5	150A
1M82Z10	150A
1M82ZS5	150A
1M82ZS10	150A
1M87ZS5	5094A
1M91Z	5095A
1M91Z3	5095A
1M91Z5	5095A
1M91Z10	5095A
1M91ZS5	5095A
1M91ZS10	5095A
1M100Z	5096A
1M100Z5	5096A
1M100Z10	5096A
1M100ZS5	5096A
1M100ZS10	5096A
1M110Z	151A
1M110Z3	151A
1M110Z5	151A
1M110Z10	151A
1M110ZS5	151A
1M110ZS10	151A
1M120Z	5097A
1M120Z3	5097A
1M120Z5	5097A
1M120Z10	5097A
1M120ZS5	5097A
1M120ZS10	5097A
1M130Z	5098A
1M130Z3	5098A
1M130Z5	5098A
1M130Z10	5098A
1M130ZS5	5098A
1M130ZS10	5098A
1M140Z	5099A
1M140Z5	5099A
1M140Z10	5099A
1M140ZS5	5099A
1M140ZS10	5099A
1M150Z	5100A
1M150Z3	5100A
1M150Z5	5100A
1M150Z10	5100A
1M150ZS5	5100A
1M150ZS10	5100A
1M160Z	5101A
1M160Z3	5101A
1M160Z5	5101A
1M160Z10	5101A
1M160ZS5	5101A
1M160ZS10	5101A
1M170ZS5	5102A
1M180Z	5103A
1M180Z3	5103A
1M180Z5	5103A
1M180Z10	5103A
1M180ZS5	5103A
1M180ZS10	5103A
1M190ZS5	5104A
1M200Z	5105A
1M200Z3	5105A
1M200Z5	5105A
1M200Z10	5105A
1M200ZS5	5105A
1M200ZS10	5105A
1M383T	1232
1M392S10	5086A
1M602S5	5091A
1M753A	137A
1M1140Z5	5099A
1M2086	116
1M8513A	116
1M.3Z10	5066A
1MA4	116
1MC1358P	712
1MJJ3.6	134A
1MJJ3.6A	134A
1MJJ6.2	137A
1MJJ6.2A	137A
1MJJ9.1	118
1MJJ9.1A	118
1MJJ12	142A
1MJJ12A	142A
1MZ10	5075A
1MZS22ZS10	5080A
1N1A13MA	143A
1N10	109
1N10D-4F	116
1N21A	112
1N21B	112
1N21C	112
1N21D	112
1N21DM	112
1N21DMR	112
1N21DR	112
1N21E	112
1N21EM	112
1N21EMR	112
1N21ER	112
1N21F	112
1N21FM	112
1N21FMR	112
1N21FR	112
1N21G	112
1N21GM	112
1N21GMR	112
1N21GR	112
1N21WD	112
1N21WDM	112
1N21WE	1N416E
1N21WEM	112
1N21WFM	112
1N21WG	112
1N21WGM	112
1N22	109
1N23	112
1N23A	1N415C
1N23B	1N415C
1N23C	1N415C
1N23D	1N415E
1N23DM	112
1N23DMR	112
1N23DR	112
1N23E	1N415E
1N23EM	112
1N23EMR	112
1N23ER	1N415E
1N23F	112
1N23FM	112
1N23FR	112
1N23G	112
1N23GM	112
1N23GMR	112
1N23GR	112
1N23H	112
1N23WD	112
1N23WDM	112
1N23WE	1N415E
1N23WEM	112
1N23WF	117
1N23WFM	112
1N23WGM	112
1N25	135A
1N28G	112
1N31A	109
1N34	109
1N34(TV)	109
1N34A	110MP
1N34A(MP)	110MP
1N34A-T	109
1N34A-Z	109
1N34AM	109
1N34AS	109
1N34G	109
1N34GA	109
1N34M	110MP
1N34Z	109
1N35	109
1N36	109
1N38	109
1N38A	109
1N38B	109
1N40	109
1N41	109
1N42	109
1N43	109
1N44	109
1N45	109
1N45A	109
1N46	109
1N46A	109
1N47	109
1N48	109
1N48A	109
1N49	109
1N50	109
1N51	109
1N52	109
1N52A	109
1N52B	5013A
1N54	109
1N54A	109
1N54G	109
1N54GA	109
1N56	109
1N56A	109
1N57	109
1N57A	109
1N58	109
1N58A	109
1N60	109
1N60(TV)	109
1N60(TV)(FA-1)	109
1N60-1	109
1N60-5	110MP
1N60-FA1	109
1N60-FM	109
1N60-M3	109
1N60-P	109
1N60-S	109
1N60-T	109
1N60-TF1	109
1N60-Z	109
1N60/0112-0028-6438	109
1N60/3490	109
1N60/4454C	109
1N60/7825B	109
1N60A	109
1N60AM	109
1N60B	109
1N60C	109
1N60D	109
1N60F	109
1N60FA1	109
1N60FD1	109
1N60FM	109
1N60FM1	109
1N60FM-1	109
1N60FMX	109
1N60G	109
1N60GA	109
1N60GB	109
1N60M	109
1N60M3	109
1N60MP	109
1N60P	109
1N60R	109
1N60S	109
1N60SD60	109
1N60T	109
1N60TV	109
1N60TV-TOGL	109
1N60TVGL	109
1N60TVTP	109
1N60TVTPGL	109
1N60Z	109
1N61A	102
1N62	109
1N63	109
1N63A	109
1N64	109
1N64A	109
1N64B	109
1N64G	109
1N64GA	109
1N64P	109
1N65	109
1N65A	109
1N66	109
1N66A	109
1N67	109
1N67A	109
1N67D	109
1N68	109
1N68A	109
1N69	109
1N69A	109
1N70	109
1N70A	109
1N71	109
1N72	109
1N72G	109
1N73	109
1N74	109
1N75A	109
1N76	109
1N76A	109
1N76C	109
1N76G	109
1N81	109
1N81A	109
1N82	112
1N82A	112
1N82AD	112
1N82AG	112
1N82D	112
1N82G	112
1N84	109
1N86	109
1N86AG	109
1N87	109
1N87A	109
1N87G	109
1N87GA	109
1N87S	109
1N87T	109
1N88	109
1N89	109
1N90	109
1N90G	109
1N90GA	109
1N91	116
1N92	116
1N93	116
1N93A	116
1N95	109
1N96	109
1N96A	109
1N97	109
1N97A	109
1N98	109
1N98A	109
1N99	109
1N99A	109
1N100	109
1N100A	109
1N103	109
1N104	109
1N105	109
1N107	109
1N108	109
1N109	109
1N110	112
1N111	109
1N112	109
1N113	109
1N114	109
1N115	109
1N116	109
1N116A	109
1N117	109
1N117A	109
1N118	109
1N118A	109
1N119	109
1N119A	109
1N120	109
1N120A	109
1N122B	117
1N124	112
1N124A	112
1N125	109
1N126	109
1N126A	109
1N128	109
1N128A	109
1N132	109
1N133	109
1N134	109
1N135	177
1N136	109
1N137	109
1N137A	177
1N137B	177
1N138	177
1N138A	177
1N138B	177
1N139	109
1N140	109
1N142	109
1N143	109
1N144	109
1N145	109
1N147	112
1N147A	112
1N148	109
1N151	116
1N152	116
1N153	116
1N158	116
1N169	116
1N172	112
1N173	112
1N176-1WHT	121
1N191	109
1N192	109
1N193	116
1N194	177
1N194A	177
1N194B	177
1N195	177
1N196	177
1N198	109
1N198A	109
1N198B	109

PART NUMBER	NTE REPLACEMENT
1N200	177
1N200AR	5875
1N201	177
1N202	177
1N203	177
1N203CA	140A
1N204	177
1N205	177
1N207	177
1N208	177
1N209	177
1N210	177
1N211	177
1N212	177
1N213	177
1N214	177
1N215	177
1N216	177
1N217	177
1N218	177
1N225	5017A
1N225A	5017A
1N226	5019A
1N226A	5019A
1N227	143A
1N227A	143A
1N228	5025A
1N228A	5025A
1N229	5028A
1N229A	5028A
1N230	5031A
1N230A	5031A
1N231	5034A
1N231A	5034A
1N234	5040A
1N234A	5040A
1N235	5043A
1N237	5048A
1N237A	5048A
1N239	5053A
1N248	5940
1N248A	5980
1N248AR	5981
1N248B	5980
1N248BR	5981
1N248C	5980
1N248CR	5981
1N248R	5941
1N248RC	5995
1N249	5942
1N249A	5982
1N249AR	5983
1N249B	5982
1N249BR	5983
1N249C	5982
1N249CR	5983
1N249R	5943
1N249RC	5995
1N250	5944
1N250A	5986
1N250AR	5987
1N250B	5986
1N250BR	5987
1N250C	5986
1N250CR	5987
1N250R	5945
1N250RC	5995
1N251	177
1N251A	177
1N252	177
1N252A	177
1N253	5832
1N254	5834
1N255	5838
1N256	5842
1N263	112
1N265	109
1N266	109
1N267	109
1N268	109
1N270	109
1N273	109
1N276	109
1N277	109
1N278	109
1N279	109
1N281	109
1N282	109
1N283	109
1N285	109
1N287	109
1N288	109
1N289	109
1N290	109
1N292	109
1N294	109
1N294A	109
1N295	109
1N295A	109
1N295S	109
1N295X	109
1N296	109
1N297	109
1N297A	109
1N298	109
1N298A	109
1N299	112
1N299B	112
1N300	177
1N300A	177
1N300B	177
1N301	177
1N301A	177
1N301B	177
1N303	177
1N303A	177
1N303B	177
1N304	109
1N305	109
1N306	109
1N307	109
1N308	109
1N309	109
1N310	109
1N312	109
1N314	109
1N315	116
1N315A	116
1N316	117
1N316A	117
1N317	117
1N317A	117
1N318	117
1N318A	117
1N319	117
1N319A	117
1N320	117
1N320A	117
1N321	116
1N321A	125
1N322	125
1N322A	125
1N323	117
1N323A	117
1N324	117
1N324A	117
1N325	117
1N325A	117
1N326	117
1N326A	117
1N327	117
1N327A	117
1N328	125
1N328A	125
1N329	125
1N329A	125
1N330	177
1N331	177
1N332	5838
1N332R	5839
1N333	5839
1N333R	5839
1N334	5836
1N334R	5837
1N335	5874
1N335R	5837
1N336	5834
1N336R	5835
1N337	5834
1N337R	5837
1N338	5832
1N338R	5833
1N339	5832
1N339R	5833
1N340	5832
1N340R	5833
1N341	5838
1N341R	5839
1N342	5838
1N342R	5839
1N343	5836
1N343R	5837
1N344	5836
1N344R	5837
1N345	5834
1N345R	5835
1N346	5834
1N346R	5835
1N347	5874
1N347R	5833
1N348	5832
1N348R	5833
1N349	5832
1N349R	5833
1N350	177
1N351	177
1N352	177
1N353	177
1N354	116
1N355	109
1N359	117
1N359A	116
1N360	117
1N360A	117
1N361	117
1N361A	117
1N362	117
1N362A	117
1N363	117
1N363A	117
1N364	125
1N364A	125
1N365	125
1N365A	125
1N367	109
1N367B	109
1N368	116
1N371	5000A
1N372	5065A
1N373	134A
1N374	5008A
1N375	5008A
1N376	135A
1N377	5070A
1N378	5014A
1N379	177
1N380	177
1N381	177
1N382	177
1N383	177
1N384	177
1N385	177
1N386	177
1N387	177
1N388	177
1N389	177
1N390	177
1N391	177
1N392	177
1N393	177
1N394	177
1N400	116
1N400B	116
1N405GP	116
1N411B	6154
1N412B	6154
1N413B	6154
1N414B	177
1N415B	1N415C
1N415C	1N415C
1N415D	1N415E
1N415E	1N415E
1N415OV	519
1N416B	1N416C
1N416C	1N416C
1N416D	1N416E
1N416E	1N416E
1N417	109
1N417SA	5085A
1N418	109
1N419	109
1N429	5013A
1N430	5016A
1N430A	5016A
1N430B	5016A
1N431	177
1N432	177
1N432A	177
1N432B	177
1N433	177
1N433A	177
1N433B	177
1N434	177
1N434A	177
1N434B	177
1N435	109
1N440	117
1N440B	117
1N441	117
1N441A	5079A
1N441B	117
1N442	117
1N442B	117
1N443	117
1N443B	117
1N444	117
1N444B	117
1N445	117
1N445B	117
1N446	117
1N447	109
1N448	116
1N449	109
1N450	116
1N451	116
1N452	109
1N453	116
1N454	109
1N455	109
1N456	177
1N456A	177
1N457	177
1N457A	177
1N457M	177
1N458	177
1N458A	177
1N458M	177
1N459	177
1N459A	177
1N459M	177
1N460	177
1N460A	177
1N460B	177
1N461	177
1N461A	177
1N462	177
1N462A	177
1N463	177
1N463A	177
1N464	177
1N464A	177
1N465	5002A
1N465A	5002A
1N466	5006A
1N466A	5006A
1N467	5007A
1N467A	5007A
1N468	5009A
1N468A	5009A
1N468B	135A
1N469	5014A
1N469A	5014A
1N470	5014A
1N470A	5014A
1N470B	5014A
1N471	134A
1N472	5008A
1N472A	5008A
1N472B	5008A
1N473	135A
1N473A	135A
1N473B	135A
1N474	5012A
1N474A	5012A
1N474B	5012A
1N475	5014A
1N475A	5014A
1N475B	5014A
1N476	109
1N477	109
1N478	109
1N479	109
1N480	109
1N480B	116
1N482	177
1N482A	177
1N482B	177
1N482C	177
1N483	177
1N483A	177
1N483AM	177
1N483B	177
1N483BM	177
1N483C	177
1N484	177
1N484A	177
1N484B	177
1N484C	177
1N485	177
1N485A	177
1N485B	177
1N485C	177
1N486	177
1N486A	177
1N486B	177
1N487	506
1N487A	506
1N487B	506
1N488	506
1N488A	506
1N488B	506
1N492	141A
1N492A	141A
1N492B	141A
1N493	141A
1N493A	141A
1N493B	141A
1N497	109
1N498	109
1N500	109
1N503	116
1N504	116
1N505	116
1N506	116
1N507	116
1N508	116
1N509	125
1N510	125
1N511	116
1N512	116
1N513	116
1N514	116
1N515	116
1N516	116
1N517	125
1N518	125
1N519	116
1N520	116
1N521	116
1N522	116
1N523	116
1N524	116
1N525	125
1N526	125
1N527	109
1N530	117
1N531	117
1N532	117
1N533	117
1N534	117
1N535	117
1N536	117
1N537	117
1N538	117
1N539	117
1N540	117
1N541	110MP
1N542	110MP
1N542A	109
1N542MP	110MP
1N543	506
1N543A	506
1N547	117
1N548	125
1N549	506
1N550	5832
1N550R	5833
1N551	5834
1N551R	5835
1N552	5836
1N552R	5837
1N553	5838
1N553R	5839
1N554	5840
1N554R	5841
1N555	5842
1N555R	5843
1N560	117
1N561	125
1N562	5846
1N562R	5847
1N563	5848
1N563R	5849
1N564	109
1N569	109
1N571	109
1N596	116
1N597	125
1N598	125
1N599	117
1N599A	117
1N600	117
1N600A	117
1N600KB	5075A
1N601	117
1N601A	117
1N601S34	109
1N602	117
1N602A	117
1N603	117
1N603A	117
1N604	117
1N604A	117
1N605	117
1N605A	117
1N606	117
1N606A	117
1N607	5830
1N607A	5830
1N608	5832
1N608A	5832
1N609	5834
1N609A	5834
1N610	5834
1N610A	5834
1N611	5836
1N611A	5836
1N612	5838
1N612A	5838
1N613	5840
1N613A	5840
1N614	5842
1N614A	5842
1N616	109
1N617	109
1N618	109
1N619	177
1N622	177
1N625	177
1N625A	177
1N625M	177
1N626	177
1N626A	177
1N626M	177
1N627	177
1N627A	177
1N628	177
1N628A	177
1N629	177
1N629A	177
1N631	109
1N632	109
1N633	177
1N636	109
1N636A	109
1N643	177
1N643A	177
1N645	116
1N645A	116
1N645B	116
1N646	116
1N647	116
1N648	116
1N649	116
1N658	177
1N658A	177
1N658M	177
1N659	177
1N659/A	177
1N659A	177
1N660	177
1N660A	177
1N661	177
1N661A	177
1N662	177
1N662A	177
1N663	177
1N663A	177
1N663M	177
1N664	5016A
1N665	142A
1N666	145A
1N667	5027A
1N668	5030A
1N669	146A
1N670	5045A
1N671	5050A
1N672	5055A
1N673	116
1N674	5009A
1N675	137A
1N676	116
1N677	116
1N678	116
1N679	116
1N681	116
1N682	116
1N683	116
1N684	116
1N685	116
1N686	116
1N687	116
1N689	116
1N690	177
1N692	116
1N693	506
1N695	109
1N695A	109
1N696	177
1N697	177
1N698	109
1N701	5019A
1N702	5002A
1N702A	5002A
1N703	5006A
1N703A	5006A
1N704	5008A
1N704A	5008A
1N705	5009A
1N705A	5009A
1N706	5012A
1N706A	5012A
1N707	5014A
1N707A	5014A
1N708	5011A
1N708A	5011A
1N708B	5011A
1N709	5013A
1N709A	5013A
1N709B	137A
1N710	5014A
1N710A	5014A
1N711	5015A
1N711A	5015A
1N712	5016A
1N712A	5016A
1N712B	5016A
1N713	5018A
1N713A	5018A
1N713B	139A
1N714	5019A
1N714A	5019A
1N714B	5019A
1N715	5020A
1N715A	5020A
1N716	5021A
1N716(ZENER)	142A
1N716A	5021A
1N716B	142A
1N717	5022A
1N717A	5022A
1N718	5024A
1N718A	5024A
1N718B	145A
1N719	5025A
1N719A	5025A
1N720	5027A
1N720A	5027A
1N720B	5027A
1N721	5029A
1N721A	5029A
1N722	5030A
1N722A	5030A
1N722B	5030A
1N723	5031A
1N723A	5031A
1N724	5033A
1N724A	5033A
1N724B	146A
1N725	5035A
1N725A	5035A
1N726	5036A
1N726A	5036A
1N726B	5036A
1N727	5037A
1N727A	5037A
1N727B	5085A
1N728	5038A
1N728A	5038A
1N729	5039A
1N729A	5039A
1N730	5040A
1N730A	5040A
1N731	5041A
1N731A	5041A
1N731B	5041A
1N732	5042A
1N732A	5042A
1N732B	5042A
1N733	5044A
1N733A	5044A
1N734	5045A
1N734A	5045A
1N734B	5045A
1N735	5046A
1N735A	5046A
1N735B	5046A
1N736	5047A
1N736A	5047A
1N736B	5047A
1N737	5049A
1N737A	5049A
1N737B	5049A
1N738	5050A
1N738A	5050A
1N738B	5050A
1N739	151A
1N739A	151A
1N739B	5051A
1N740	5052A
1N740A	5052A
1N740B	5052A
1N741	5053A
1N741A	5053A
1N741B	5055A
1N742	5055A
1N742A	5055A
1N742B	5055A
1N743	5056A
1N743A	5056A
1N743B	5056A
1N744	5058A
1N744A	5058A
1N744B	5058A
1N745	5060A
1N745A	5060A
1N745B	5060A
1N746	5005A
1N746A	5005A
1N747	5006A
1N747A	5006A
1N747B	134A
1N748	5007A
1N748A	5007A
1N749	5008A
1N749A	5008A
1N750	5009A
1N750A	5009A
1N751	5010A
1N751A	5010A
1N752	5011A
1N752A	5011A
1N753	5013A
1N753A	5013A
1N754	5014A
1N754A	5014A
1N755	5015A
1N755A	5015A
1N756	5016A
1N756A	5016A
1N757	5018A
1N757A	5018A
1N758	5019A
1N758A	5019A
1N759	5021A
1N759A	5021A
1N760	177
1N761	5009A
1N761-1	5009A
1N761-2	5010T1
1N761A	135A
1N762	5012A
1N762-1	5011A
1N762-2	5012A
1N762A	136A
1N763	5015A
1N763-1	5014A
1N763-2	5014A
1N763-3	5015A
1N763A	5015A
1N764	5073A
1N764-1	5016A
1N764-2	5017A
1N764-3	5018A
1N765	5019A
1N765-1	5019A
1N765-2	5020A
1N765A	5019A
1N766	5022A
1N766-1	5021A
1N766-2	5022A
1N766-3	144A
1N766A	143A
1N767	5025A
1N767-1	145A
1N767-2	5075A
1N767-3	5026A
1N767-22	5025A
1N767A	5025A
1N768	5028A
1N768-1	5027A
1N768-2	5028A
1N768-3	5029A
1N768A	5028A
1N769	5081A
1N769-1	5030A
1N769-2	5031A
1N769-3	5032A
1N769-4	5034A
1N769A	5031A
1N770	109
1N771	109
1N771A	109
1N771B	109
1N772A	109
1N773	109
1N773A	109
1N774	109
1N774A	109
1N775	109
1N776	109
1N777	109
1N778	177
1N779	177
1N781	109
1N788	177
1N789	177
1N789M	177
1N790	177
1N790M	177
1N791	177
1N791M	177
1N792	177
1N792M	177
1N793	177
1N793M	177
1N794	177
1N795	177
1N796	177
1N797	177
1N798	177
1N799	177
1N800	177
1N801	177
1N802	177
1N803	177
1N804	177
1N805	109

PART NUMBER	NTE REPLACEMENT
1N806	177
1N807	177
1N808	177
1N809	177
1N810	177
1N811	177
1N811M	177
1N812	177
1N812M	177
1N813	177
1N813M	177
1N814	177
1N814M	177
1N815	177
1N815M	177
1N816	5070A
1N817	177
1N818	177
1N818M	177
1N819	116
1N822	137A
1N822AG	112
1N824	137A
1N826	5014A
1N835	109
1N837	177
1N837A	177
1N838	177
1N839	177
1N840	177
1N840M	177
1N841	177
1N842	177
1N843	177
1N844	177
1N845	177
1N846	116
1N847	116
1N848	116
1N849	116
1N850	116
1N851	116
1N852	116
1N853	125
1N854	125
1N855	125
1N856	125
1N857	116
1N858	116
1N859	116
1N860	116
1N861	116
1N862	116
1N863	116
1N864	125
1N865	125
1N866	125
1N867	125
1N868	116
1N869	116
1N870	116
1N871	116
1N872	116
1N873	116
1N874	116
1N875	125
1N876	125
1N877	125
1N878	125
1N879	116
1N880	116
1N881	116
1N881B	116
1N882	116
1N883	116
1N884	116
1N885	116
1N886	125
1N887	125
1N888	125
1N889	125
1N890	177
1N891	177
1N892	177
1N893	506
1N897	177
1N898	177
1N899	177
1N900	177
1N901	177
1N902	177
1N903	177
1N903/A	177
1N903A	177
1N903AM	177
1N903M	177
1N904	519
1N904/A	177
1N904A	519
1N904AM	177
1N904M	177
1N905	177
1N905/A	177
1N905A	177
1N905AM	177
1N905M	177
1N906	177
1N906/A	177
1N906A	177
1N906AM	177
1N906M	177
1N907	177
1N907/A	177
1N907A	177
1N907AM	177
1N907M	177
1N908	177
1N908/A	177
1N908A	177
1N908AM	177
1N908M	177
1N909	109
1N910	109
1N911	109
1N914	519
1N914/A/B	519
1N914A	519
1N914B	519
1N914F	177
1N914M	519
1N915	177
1N916	519
1N916A	519
1N916B	519
1N917	177
1N919	177
1N920	177
1N921	177
1N922	177
1N923	506
1N924	177
1N925	177
1N926	177
1N927	177
1N928	177
1N929	177
1N930	177
1N931	177
1N932	177
1N933	177
1N934	177
1N945	141A
1N945A	141A
1N945B	141A
1N946	141A
1N946A	141A
1N946B	141A
1N947	116
1N948	177
1N949	109
1N954	614
1N957	5014A
1N957A	5014A
1N957B	5014A
1N958	5015A
1N958A	5015A
1N958B	5015A
1N959	5016A
1N959A	5016A
1N959B	5016A
1N960	139A
1N960A	139A
1N960B	5018A
1N961	140A
1N961A	5019A
1N961B	5019A
1N962	5020A
1N962A	5020A
1N962B	5019A
1N963	5021A
1N963A	5021A
1N963B	5021A
1N964	5022A
1N964A	5022A
1N964B	5022A
1N964B-F	143A
1N965	5024A
1N965A	5024A
1N965B	5024A
1N966	5025A
1N966A	5025A
1N966B	5025A
1N966B-F	5075A
1N967	5027A
1N967A	5027A
1N967B	5027A
1N967B-F	5077A
1N968	5029A
1N968A	5029A
1N968B	5029A
1N969	5080A
1N969A	5030A
1N969B	5030A
1N970	5031A
1N970A	5031A
1N970B	5031A
1N971A	5033A
1N971B	5033A
1N972	5035A
1N972A	5035A
1N972B	5035A
1N972B-F	5084A
1N973	5036A
1N973A	5036A
1N973B	5036A
1N974	5037A
1N974A	5037A
1N974B	5037A
1N975	5038A
1N975A	5038A
1N975B	5038A
1N976	5039A
1N976A	5039A
1N976B	5039A
1N977	5040A
1N977A	5040A
1N977B	5040A
1N978	5041A
1N978A	5041A
1N978B	5041A
1N979	5042A
1N979A	5042A
1N979B	5042A
1N980	5044A
1N980A	5044A
1N980B	5044A
1N981	5045A
1N981A	5045A
1N981B	5045A
1N982	5046A
1N982A	5046A
1N982B	5046A
1N983	5047A
1N983A	5047A
1N983B	5047A
1N984	5049A
1N984A	5049A
1N984B	5049A
1N985	5050A
1N985A	5050A
1N985B	5050A
1N986	5051A
1N986A	5051A
1N986B	5051A
1N987	5052A
1N987A	5052A
1N987B	5052A
1N988	5053A
1N988A	5053A
1N988B	5053A
1N989	5055A
1N989A	5055A
1N989B	5055A
1N990	5056A
1N990A	5056A
1N990B	5056A
1N991	5058A
1N991A	5058A
1N991B	5103A
1N991N	5058A
1N992	5060A
1N992A	5060A
1N992B	5060A
1N993	519
1N994	109
1N995	177
1N995M	109
1N996	109
1N997	177
1N998	116
1N999	177
1N1008	116
1N1028	116
1N1029	116
1N1030	116
1N1031	116
1N1032	116
1N1033	116
1N1035	5833
1N1036	5835
1N1037	5835
1N1038	5837
1N1039	5839
1N1040	5831
1N1041	5833
1N1042	5835
1N1043	5835
1N1044	5837
1N1045	5839
1N1046	5831
1N1047	5833
1N1048	5835
1N1049	5835
1N1050	5837
1N1051	5839
1N1052	116
1N1053	116
1N1054	166
1N1055	5802
1N1056	156
1N1057	156
1N1058	5851
1N1059	5853
1N1060	5855
1N1061	5855
1N1062	5857
1N1063	5859
1N1064	5851
1N1065	5853
1N1066	5854
1N1067	5854
1N1068	5856
1N1069	5874
1N1070	5851
1N1071	5853
1N1072	5855
1N1073	5855
1N1074	5857
1N1075	5859
1N1076	5913
1N1077	5895
1N1078	5944
1N1079	5897
1N1080	5946
1N1084	116
1N1093	109
1N1095	117
1N1096	117
1N1100	117
1N1101	117
1N1102	117
1N1103	117
1N1104	117
1N1104R	5983
1N1105	117
1N1108	117
1N1115	5832
1N1116	5834
1N1116R	5835
1N1117	5836
1N1117R	5839
1N1118	5838
1N1118R	5839
1N1119	5840
1N1119R	5843
1N1120	5842
1N1120R	5843
1N1122A	116
1N1124	5834
1N1124A	5854
1N1124AR	5855
1N1124R	5835
1N1125	5836
1N1125A	5856
1N1125AR	5857
1N1125R	5837
1N1126	5838
1N1126A	5858
1N1126AR	5859
1N1126R	5839
1N1127	5840
1N1127A	5860
1N1127AR	5861
1N1127R	5841
1N1128	5842
1N1128A	5862
1N1128AR	5863
1N1128R	5843
1N1169	116
1N1169A	117
1N1182	5994
1N1183	5980
1N1183A	5980
1N1183AR	5981
1N1183R	5981
1N1183RA	5981
1N1184	5982
1N1184A	5982
1N1184AR	5983
1N1184R	5983
1N1184RA	5987
1N1185	5986
1N1185A	5986
1N1185AR	5987
1N1185R	5987
1N1186	5986
1N1186A	5986
1N1186AR	5987
1N1186R	5987
1N1186RA	5987
1N1187	5988
1N1187A	5988
1N1187AR	5989
1N1187R	5989
1N1187RA	5989
1N1188	5990
1N1188A	5990
1N1188AR	5991
1N1188R	5991
1N1188RA	5991
1N1189	5992
1N1189A	5992
1N1189AR	5993
1N1189R	5993
1N1189RA	5993
1N1190	5994
1N1190A	5994
1N1190AR	5995
1N1190R	5995
1N1190RA	5995
1N1191	5980
1N1191A	5980
1N1191AR	5981
1N1191R	5981
1N1191RA	5871
1N1192	5982
1N1192A	5982
1N1192AR	5983
1N1192R	5983
1N1193	5986
1N1193A	5986
1N1193AR	5987
1N1193R	5987
1N1194	5986
1N1194A	5986
1N1194AR	5987
1N1194R	5987
1N1195	5988
1N1195A	5988
1N1195AR	5989
1N1195R	5989
1N1195RA	5995
1N1196	5990
1N1196A	5990
1N1196AR	5991
1N1196R	5991
1N1196RA	5995
1N1197	5992
1N1197A	5992
1N1197AR	5993
1N1197R	5993
1N1197RA	5995
1N1198	5994
1N1198A	5994
1N1198AR	5995
1N1198R	5995
1N1198RA	5995
1N1199	5870
1N1199A	5870
1N1199AR	5871
1N1199B	5870
1N1199C	5870
1N1199R	5871
1N1199RA	5883
1N1199RB	5871
1N1199RC	5871
1N1200	5872
1N1200A	5872
1N1200AR	5875
1N1200B	5872
1N1200BR	5875
1N1200C	5832
1N1200R	5873
1N1200RA	5875
1N1200RB	5873
1N1200RC	5833
1N1201	5874
1N1201A	5874
1N1201AR	5875
1N1201B	5874
1N1201BR	5875
1N1201R	5875
1N1201RA	5883
1N1201RB	5875
1N1202	5874
1N1202A	5874
1N1202AR	5875
1N1202B	5874
1N1202BR	5875
1N1202C	5834
1N1202R	5875
1N1202RA	5875
1N1202RB	5875
1N1202RC	5835
1N1203	5876
1N1203A	5876
1N1203AR	5879
1N1203B	5876
1N1203BR	5879
1N1203R	5877
1N1203RA	5877
1N1203RB	5877
1N1204	5878
1N1204A	5878
1N1204AR	5879
1N1204B	5878
1N1204BR	5879
1N1204C	5836
1N1204R	5879
1N1204RA	5879
1N1204RB	5879
1N1204RC	5839
1N1205	5880
1N1205A	5880
1N1205AR	5883
1N1205B	5880
1N1205BR	5883
1N1205R	5881
1N1205RA	5881
1N1205RB	5881
1N1206	5882
1N1206A	5882
1N1206AR	5883
1N1206B	5882
1N1206BR	5883
1N1206C	5840
1N1206R	5883
1N1206RA	5883
1N1206RB	5883
1N1206RC	5841
1N1217	117
1N1217A	117
1N1217B	116
1N1218	117
1N1218A	117
1N1218B	116
1N1219	117
1N1219A	117
1N1219B	116
1N1220	117
1N1220A	117
1N1220B	5802
1N1221	117
1N1221A	117
1N1221B	5803
1N1222	117
1N1222A	117
1N1222B	116
1N1223	117
1N1223A	117
1N1223B	5805
1N1224	117
1N1224A	117
1N1224B	5806
1N1225	156
1N1225A	125
1N1225B	156
1N1226	156
1N1226A	125
1N1226B	156
1N1227	5830
1N1227A	5830
1N1227AR	5831
1N1227B	5830
1N1227BR	5831
1N1227RA	5831
1N1227RB	5831
1N1228	5832
1N1228A	5832
1N1228AR	5835
1N1228B	5832
1N1228BR	5835
1N1229	5834
1N1229A	5834
1N1229B	5834
1N1229R	5835
1N1229RA	5835
1N1229RB	5835
1N1230	5834
1N1230A	5834
1N1230B	5834
1N1230R	5835
1N1230RA	5835
1N1230RB	5835
1N1231	5836
1N1231A	5836
1N1231B	5836
1N1231R	5839
1N1231RA	5839
1N1232	5838
1N1232A	5838
1N1232B	5838
1N1232RB	5839
1N1233	5840
1N1233A	5840
1N1233B	5840
1N1233R	5843
1N1233RA	5843
1N1233RB	5843
1N1234	5842
1N1234A	5842
1N1234B	5842
1N1234R	5843
1N1234RA	5843
1N1234RB	5843
1N1235	5846
1N1235A	5846
1N1235B	5846
1N1235R	5847
1N1235RA	5847
1N1235RB	5847
1N1236	5846
1N1236A	5846
1N1236B	5846
1N1236R	5847
1N1236RA	5847
1N1236RB	5847
1N1251	117
1N1252	117
1N1253	117
1N1254	117
1N1255	117
1N1255(WEST)	5982
1N1255A	116
1N1256	117
1N1256(WEST)	5986
1N1257	117
1N1257(WEST)	5988
1N1258	125
1N1259	117
1N1259(WEST)	5992
1N1260	117
1N1260(WEST)	5994
1N1261	125
1N1301	5980
1N1302	5982
1N1304	5986
1N1306	5988
1N1313	5017A
1N1313A	5017A
1N1314	5020A
1N1314A	5020A
1N1315	5022A
1N1315A	5022A
1N1316	5025A
1N1316A	5025A
1N1317	5028A
1N1317A	5028A
1N1318	5031A
1N1318A	5031A
1N1319	5034A
1N1319A	5034A
1N1320	5036A
1N1320A	5036A
1N1321	5038A
1N1321A	5038A
1N1322	5040A
1N1322A	5040A
1N1323	5043A
1N1323A	5043A
1N1324	5092A
1N1324A	5092A
1N1324AR	5883
1N1325	5048A
1N1325A	5048A
1N1326	151A
1N1326A	151A
1N1327	5053A
1N1327A	5053A
1N1337-5	116
1N1341	5850
1N1341A	5850
1N1341AR	5851
1N1341B	5850
1N1341BR	5851
1N1341R	5851
1N1341RB	5851
1N1342	5852
1N1342A	5852
1N1342AR	5855
1N1342B	5852
1N1342BR	5855
1N1342R	5853
1N1342RB	5853
1N1343	5854
1N1343A	5854
1N1343AR	5855
1N1343B	5854
1N1343BR	5855
1N1343R	5855
1N1343RB	5855
1N1344	5854
1N1344A	5854
1N1344AR	5855
1N1344B	5854
1N1344BR	5855
1N1344R	5855
1N1344RB	5855
1N1345	5856
1N1345A	5856
1N1345AR	5859
1N1345B	5856
1N1345BR	5859
1N1345R	5857
1N1345RB	5857
1N1346	5858
1N1346A	5858
1N1346AR	5859
1N1346B	5858
1N1346BR	5859
1N1346R	5859
1N1346RB	5859
1N1347	5860
1N1347A	5860
1N1347AR	5863
1N1347B	5860
1N1347BR	5863
1N1347R	5861
1N1347RB	5861
1N1348	5862
1N1348A	5862
1N1348AR	5863
1N1348B	5862
1N1348BR	5863
1N1348R	5863
1N1348RB	5863
1N1351	5186A
1N1351A	5186A
1N1351B	5186A
1N1351C	5186A
1N1351R	5186AK
1N1351RA	5186AK
1N1351RB	5186AK
1N1352	5187A
1N1352A	5187A
1N1352B	5187A
1N1352C	5187A
1N1352R	5187AK
1N1352RA	5187AK
1N1352RB	5187AK
1N1353	5188A
1N1353A	5188A
1N1353B	5188A
1N1353C	5188A
1N1353R	5188AK
1N1353RA	5188AK
1N1353RB	5188AK
1N1354	5189A
1N1354A	5189A
1N1354B	5189A
1N1354C	5189A
1N1354R	5189AK
1N1354RA	5189AK
1N1354RB	5189AK
1N1355	5191A
1N1355A	5191A
1N1355B	5191A
1N1355C	5191A
1N1355R	5191AK
1N1355RA	5191AK
1N1355RB	5191AK
1N1356	5192A
1N1356A	5192A
1N1356B	5192A
1N1356C	5192A
1N1356R	5192AK
1N1356RA	5192AK
1N1356RB	5192AK
1N1357	5194A
1N1357A	5194A
1N1357B	5194A
1N1357R	5194AK
1N1357RA	5194AK
1N1357RB	5194AK
1N1358	5196A
1N1358A	5196A
1N1358B	5196A
1N1358R	5196AK
1N1358RA	5196AK
1N1358RB	5196AK
1N1359	5197A
1N1359A	5197A
1N1359B	5197A
1N1359R	5197AK
1N1359RA	5197AK
1N1359RB	5197AK
1N1360	5198A
1N1360A	5198A
1N1360B	5198A
1N1360R	5198AK
1N1360RA	5198AK
1N1360RB	5198AK
1N1361	5200A
1N1361A	5200A
1N1361B	5200A
1N1361R	5200AK
1N1361RA	5200AK
1N1361RB	5200AK

PART NUMBER	NTE REPLACEMENT
1N1362	5202A
1N1362A	5202A
1N1362B	5202A
1N1362R	5202AK
1N1362RA	5202AK
1N1362RB	5202AK
1N1363	5203A
1N1363A	5203A
1N1363B	5203A
1N1363R	5203AK
1N1363RA	5203AK
1N1363RB	5203AK
1N1364	5204A
1N1364A	5204A
1N1364B	5204A
1N1364R	5204AK
1N1364RA	5204AK
1N1364RB	5204AK
1N1365	5205A
1N1365A	5205A
1N1365B	5205A
1N1365R	5205AK
1N1365RA	5205AK
1N1365RB	5205AK
1N1366	5206A
1N1366A	5206A
1N1366B	5206A
1N1366R	5206AK
1N1366RA	5206AK
1N1366RB	5206AK
1N1367	5208A
1N1367A	5208A
1N1367B	5208A
1N1367R	5208AK
1N1367RA	5208AK
1N1367RB	5208AK
1N1368	5210A
1N1368A	5210A
1N1368B	5210A
1N1368R	5210AK
1N1368RA	5210AK
1N1368RB	5210AK
1N1369	5212A
1N1369A	5212A
1N1369B	5212A
1N1369R	5212AK
1N1369RA	5212AK
1N1369RB	5212AK
1N1370	5214A
1N1370A	5214A
1N1370B	5214A
1N1370R	5214AK
1N1370RA	5214AK
1N1370RB	5214AK
1N1371	5215A
1N1371A	5215A
1N1371B	5215A
1N1371R	5215AK
1N1371RA	5215AK
1N1371RB	5215AK
1N1372	5216A
1N1372A	5216A
1N1372B	5216A
1N1372R	5216AK
1N1372RA	5216AK
1N1372RB	5216AK
1N1373	5217A
1N1373A	5217A
1N1373B	5217A
1N1373R	5217AK
1N1373RA	5217AK
1N1373RB	5217AK
1N1374	5219A
1N1374A	5219A
1N1374B	5219A
1N1374R	5219AK
1N1374RA	5219AK
1N1374RB	5219AK
1N1375	5220A
1N1375A	5220A
1N1375B	5220A
1N1375R	5220AK
1N1375RA	5220AK
1N1375RB	5220AK
1N1391	109
1N1396	6050
1N1399	6026
1N1401	6060
1N1406	117
1N1407	125
1N1408	125
1N1409	506
1N1415	116
1N1416	5183A
1N1417	5188A
1N1418	5191A
1N1419	5194A
1N1420	5197A
1N1421	5200A
1N1422	5215A
1N1423	5220A
1N1424	5226A
1N1425	5072A
1N1426	142A
1N1427	145A
1N1428	5077A
1N1429	5080A
1N1430	146A
1N1431	5092A
1N1432	5096A
1N1433	5100A
1N1434	5980
1N1435	5982
1N1436	5986

PART NUMBER	NTE REPLACEMENT
1N1437	5990
1N1438	5994
1N1439	116
1N1440	116
1N1441	116
1N1442	116
1N1443	125
1N1443A	125
1N1443B	5848
1N1444	5848
1N1444A	5848
1N1444B	5848
1N1446	5832
1N1447	5834
1N1448	5836
1N1449	5838
1N1450	5832
1N1451	5834
1N1452	5836
1N1453	5838
1N1482	5176A
1N1483	5180A
1N1484	5069A
1N1485	137A
1N1486	117
1N1487	117
1N1488	117
1N1489	117
1N1490	117
1N1491	117
1N1492	117
1N1507	5067A
1N1507A	5067A
1N1508	5069A
1N1508A	5069A
1N1509	136A
1N1509A	136A
1N1510	5071A
1N1510A	5071A
1N1511	5072A
1N1511A	5072A
1N1512	140A
1N1512A	140A
1N1513	142A
1N1513A	142A
1N1514	145A
1N1514A	145A
1N1515	5077A
1N1515A	5077A
1N1516	5080A
1N1516A	5080A
1N1517	146A
1N1517A	146A
1N1518	5067A
1N1518A	5067A
1N1519	5069A
1N1519A	5069A
1N1520	136A
1N1520A	136A
1N1521	5071A
1N1521A	5071A
1N1522	5072A
1N1522A	5072A
1N1523	140A
1N1523A	140A
1N1524	142A
1N1524A	142A
1N1524R	5883
1N1525	145A
1N1525A	145A
1N1526	5077A
1N1526A	5077A
1N1527	5080A
1N1527A	5080A
1N1528	146A
1N1528A	146A
1N1530	5073A
1N1530A	5073A
1N1531A	146A
1N1537	5830
1N1537R	5831
1N1538R	5833
1N1539	5834
1N1539R	5835
1N1540	5834
1N1540R	5835
1N1541	5836
1N1541R	5837
1N1542	5838
1N1542R	5839
1N1543	5840
1N1543R	5841
1N1544	5842
1N1544R	5843
1N1551	5832
1N1552	5834
1N1552R	5835
1N1553	5836
1N1553R	5839
1N1554	5838
1N1554R	5839
1N1555	5840
1N1555R	5843
1N1556	117
1N1557	117
1N1558	117
1N1559	117
1N1560	117
1N1561	109
1N1562	109
1N1563	5801
1N1563A	116
1N1564	5802
1N1564A	116

PART NUMBER	NTE REPLACEMENT
1N1565	5803
1N1565A	116
1N1566	5804
1N1566A	116
1N1567	5805
1N1567A	116
1N1568	5806
1N1568A	116
1N1575	5046A
1N1581	5830
1N1581R	5831
1N1582	5832
1N1582R	5833
1N1583	5834
1N1583R	5835
1N1584	5836
1N1584R	5837
1N1585	5838
1N1585R	5839
1N1586	5840
1N1586R	5841
1N1587	5842
1N1587R	5843
1N1588	5174AK
1N1588A	5174AK
1N1589	5176AK
1N1589A	5176AK
1N1590	5178AK
1N1590A	5178AK
1N1590R	5178A
1N1591	5181AK
1N1591A	5181AK
1N1591AR	5181A
1N1591R	5181A
1N1592	5183AK
1N1592A	5183AK
1N1592AR	5183A
1N1592R	5183A
1N1593	5186AK
1N1593A	5186A
1N1593AR	5186A
1N1593R	5186A
1N1594	5188AK
1N1594A	5188AK
1N1594AR	5188A
1N1594R	5188A
1N1595	5191AK
1N1595A	5191AK
1N1595AR	5191A
1N1595R	5191A
1N1596	5194AK
1N1596A	5194AK
1N1596AR	5194A
1N1596R	5194A
1N1597	5197AK
1N1597A	5197A
1N1598	5200AK
1N1598A	5200AK
1N1598AR	5200A
1N1598R	5200A
1N1599	5174AK
1N1599A	5174AK
1N1599AR	5174A
1N1599R	5174A
1N1600	5176AK
1N1600A	5176A
1N1600AR	5176A
1N1600R	5176A
1N1601	5178AK
1N1601A	5178AK
1N1601AR	5178A
1N1601R	5178A
1N1602	5181AK
1N1602A	5181A
1N1602AR	5181A
1N1602R	5181A
1N1603	5183AK
1N1603A	5183A
1N1603R	5183AK
1N1604	5186AK
1N1604A	5186AK
1N1604AR	5186A
1N1604R	5186A
1N1605	5188AK
1N1605A	5188A
1N1605AR	5188AK
1N1605R	5188AK
1N1605RA	5188AK
1N1606	5191AK
1N1606A	5191A
1N1606AR	5191AK
1N1606R	5191AK
1N1607	5194AK
1N1607A	5194A
1N1607AR	5194AK
1N1607R	5194AK
1N1608	5197AK
1N1608A	5197A
1N1608AR	5197AK
1N1608R	5197AK
1N1609	5200AK
1N1609A	5200A
1N1609AR	5200AK
1N1609R	5200AK
1N1612	5850
1N1612(REV.POL.)	5851
1N1612A	5850
1N1612AR	5851
1N1612R	5870
1N1613	5852
1N1613(REV.POL.)	5853
1N1613A	5852
1N1613AR	5853
1N1613R	5872

PART NUMBER	NTE REPLACEMENT
1N1614	5854
1N1614(REV.POL.)	5855
1N1614A	5854
1N1614AR	5855
1N1614B	5324
1N1614R	5874
1N1615	5858
1N1615A	5858
1N1615AR	5859
1N1615R	5878
1N1616	5861
1N1616(REV.POL.)	5863
1N1616A	5862
1N1616AR	5863
1N1616R	5882
1N1617	5801
1N1617AR	5883
1N1618	5802
1N1619	5803
1N1620	5804
1N1621	5872
1N1622	5874
1N1623	5876
1N1624	5878
1N1630	177
1N1638	177
1N1644	117
1N1645	117
1N1646	117
1N1647	117
1N1648	117
1N1649	117
1N1650	117
1N1651	117
1N1652	117
1N1653	117
1N1692	117
1N1693	117
1N1694	117
1N1695	117
1N1696	117
1N1697	117
1N1701	117
1N1702	117
1N1703	117
1N1704	117
1N1705	117
1N1706	117
1N1707	117
1N1708	117
1N1709	117
1N1710	117
1N1711	117
1N1712	117
1N1713	142A
1N1730	125
1N1730A	125
1N1731	525
1N1731A	525
1N1732	525
1N1735	5013A
1N1736	5021A
1N1736A	5021A
1N1737	5078A
1N1737A	5078A
1N1738	5082A
1N1738A	5082A
1N1739	5084A
1N1739A	5084A
1N1740	5143A
1N1740A	5143A
1N1741	5145A
1N1741A	5145A
1N1742	5147A
1N1742A	5147A
1N1744	140A
1N1763	5804
1N1763A	5804
1N1764	5805
1N1764A	5805
1N1765	135A
1N1765A	136A
1N1766	137A
1N1766A	137A
1N1767	5071A
1N1767A	5071A
1N1768	138A
1N1768A	138A
1N1769	5072A
1N1769A	5072A
1N1770	139A
1N1770A	139A
1N1771	140A
1N1771A	140A
1N1772	5074A
1N1772A	5174A
1N1773	142A
1N1773A	142A
1N1774	143A
1N1774A	143A
1N1775A	145A
1N1776	5075A
1N1776A	5075A
1N1777	5077A
1N1777A	5077A
1N1778	5079A
1N1778A	5079A
1N1779	5070A
1N1779A	137A
1N1780	5081A
1N1781	146A
1N1781A	146A
1N1782	5084A
1N1782A	5084A

PART NUMBER	NTE REPLACEMENT
1N1783	143A
1N1783A	147A
1N1784	5085A
1N1784A	5085A
1N1785	5086A
1N1785A	5086A
1N1786	5087A
1N1786A	5087A
1N1787	5088A
1N1787A	5088A
1N1788	5089A
1N1788A	5089A
1N1789	5090A
1N1789A	5090A
1N1790	149A
1N1790A	149A
1N1791	5092A
1N1791A	5092A
1N1792	5093A
1N1792A	5093A
1N1793	150A
1N1793A	150A
1N1794	5095A
1N1794A	5095A
1N1795	5096A
1N1795A	5096A
1N1796	151A
1N1796A	151A
1N1797	5097A
1N1798	5098A
1N1798A	5098A
1N1799	5100A
1N1799A	5100A
1N1800	5101A
1N1800A	5101A
1N1801	5103A
1N1801A	5103A
1N1802	5105A
1N1802A	5105A
1N1803	5178A
1N1803A	5178A
1N1803AR	5178A
1N1803B	5178AK
1N1803BR	5178A
1N1803R	5178A
1N1804	5180A
1N1804A	5180A
1N1805	5181A
1N1805A	5181A
1N1805AR	5181A
1N1805B	5181A
1N1805R	5181AK
1N1805RA	5181AK
1N1805RB	5181AK
1N1806	5182A
1N1806A	5182A
1N1807	5183A
1N1807A	5183A
1N1807AR	5133AK
1N1807B	5183A
1N1807BR	5133AK
1N1807R	5133AK
1N1808	5185A
1N1808A	5185A
1N1808B	5185A
1N1808C	5185A
1N1809	5222A
1N1809A	5222A
1N1809R	5222AK
1N1810	5223A
1N1810A	5223A
1N1810AR	5223AK
1N1810B	5223A
1N1810BR	5223AK
1N1810R	5223AK
1N1811	5224A
1N1811A	5224A
1N1811R	5224AK
1N1812	5226A
1N1812A	5226A
1N1812AR	5226AK
1N1812B	5226A
1N1812BR	5226AK
1N1812R	5226AK
1N1813	5227A
1N1813A	5227A
1N1813R	5227AK
1N1814	5230A
1N1814A	5230A
1N1814AR	5230A
1N1814B	5230A
1N1814BR	5230AK
1N1814R	5230AK
1N1815	5232A
1N1815A	5232A
1N1815R	5232AK
1N1816	5189A
1N1817	5191A
1N1817A	5191A
1N1817AR	5191AK
1N1817B	5191A
1N1817BR	5191AK
1N1817C	5191A
1N1817R	5191AK
1N1818	5192A
1N1819	5194A
1N1819A	5194A
1N1819AR	5194AK
1N1819B	5194A
1N1819R	5194AK
1N1820	5196A
1N1821	5197A
1N1821A	5197A
1N1821AR	5197AK

PART NUMBER	NTE REPLACEMENT
1N1821B	5197A
1N1821BR	5197AK
1N1821R	5197AK
1N1822	5198A
1N1823	5200A
1N1823A	5200A
1N1823AR	5200AK
1N1823B	5200A
1N1823BR	5200AK
1N1823R	5200AK
1N1824	5202A
1N1825	5203A
1N1825A	5203A
1N1825AR	5203AK
1N1825B	5203A
1N1825BR	5203AK
1N1825R	5203AK
1N1826	5204A
1N1827	5205A
1N1827A	5205A
1N1827AR	5205AK
1N1827B	5205A
1N1827BR	5205AK
1N1827R	5205AK
1N1828	5206A
1N1829	5208A
1N1829A	5208A
1N1829AR	5208AK
1N1829B	5208A
1N1829BR	5208AK
1N1829R	5208AK
1N1830	5210A
1N1831	5212A
1N1831A	146A
1N1831AR	5212AK
1N1831B	5212A
1N1831BR	5212AK
1N1831R	5212AK
1N1832	5214A
1N1833	5215A
1N1833A	5215A
1N1833AR	5215AK
1N1833B	5215A
1N1833BR	5215AK
1N1833R	5215AK
1N1834	5216A
1N1835	5217A
1N1835A	5217A
1N1835AR	5217AK
1N1835B	5217A
1N1835BR	5217AK
1N1835R	5217AK
1N1836	5219A
1N1839	177
1N1840	177
1N1841	177
1N1842	177
1N1843	177
1N1844	177
1N1845	177
1N1846	177
1N1847	177
1N1875	5072A
1N1875A	5072A
1N1875B	5072A
1N1876	140A
1N1876A	140A
1N1877	142A
1N1877A	142A
1N1878	145A
1N1878A	145A
1N1879	5077A
1N1879A	5077A
1N1880	5080A
1N1880A	5080A
1N1881	146A
1N1881A	146A
1N1882	147A
1N1882A	147A
1N1883	5086A
1N1883A	5086A
1N1884	5088A
1N1884A	5088A
1N1885	5090A
1N1885A	5090A
1N1886	5092A
1N1886A	5092A
1N1887	150A
1N1887A	150A
1N1888	5096A
1N1888A	5096A
1N1889	5097A
1N1890	5100A
1N1891	5183A
1N1892	5186A
1N1892A	5186A
1N1893	5188A
1N1894	5191A
1N1895	5194A
1N1896	5197A
1N1897	5200A
1N1898	5203A
1N1899	5205A
1N1900	5208A
1N1901	5212A
1N1902	5215A
1N1903	5217A
1N1904	5221A
1N1905	5223A
1N1906	5226A
1N1907	5800
1N1908	5801
1N1909	5802
1N1910	5803

PART NUMBER	NTE REPLACEMENT
1N1911	5804
1N1912	5805
1N1913	5806
1N1914	5808
1N1915	5808
1N1916	5809
1N1917	5850
1N1927	5007A
1N1927A	5007A
1N1928	5009A
1N1928A	5009A
1N1929	5011A
1N1929A	5011A
1N1929B	5011T1
1N1930	5014A
1N1931	5016A
1N1931A	5016A
1N1931B	5072A
1N1932	5019A
1N1932A	140A
1N1932B	5019T1
1N1933	5021A
1N1933B	5021T1
1N1934	5024A
1N1934A	145A
1N1934B	145A
1N1935	5027A
1N1935A	5027A
1N1936	5030A
1N1937	5033A
1N1937A	146A
1N1937B	146A
1N1938	5036A
1N1938A	147A
1N1938B	147A
1N1939	5038A
1N1940	5040A
1N1941	5042A
1N1942	5042A
1N1943	5047A
1N1943A	150A
1N1943B	150A
1N1944	5050A
1N1945	5052A
1N1946	5055A
1N1946A	5055A
1N1947	5058A
1N1954	5007A
1N1954A	5052A
1N1954B	5007A
1N1955	5009A
1N1955A	5009A
1N1956	5011A
1N1956A	5011A
1N1957	5014A
1N1957A	5014A
1N1958	5016A
1N1958A	5016A
1N1959	5019A
1N1960	5021A
1N1960A	142A
1N1960B	5021T1
1N1961	5023A
1N1962	5027A
1N1962A	5027A
1N1963	5030A
1N1964	5033A
1N1964A	146A
1N1964B	146A
1N1965	5036A
1N1965A	147A
1N1965B	147A
1N1966	5038A
1N1967	5040A
1N1968	5042A
1N1969	5045A
1N1970	5047A
1N1971	5050A
1N1972	5052A
1N1973	5055A
1N1974	5058A
1N1975	5051A
1N1981	5007A
1N1981A	5007A
1N1981B	5007A
1N1982	5009A
1N1983	5011A
1N1983A	5011A
1N1983B	5011A
1N1984	5014A
1N1985	5016A
1N1985A	5016A
1N1985B	5016A
1N1986	5019A
1N1986A	140A
1N1986B	140A
1N1987	5021A
1N1987A	5021A
1N1987B	5021A
1N1988	5024A
1N1988A	145A
1N1988B	145A
1N1989	5027A
1N1989A	5027A
1N1989B	5027A
1N1990	5030A
1N1991	5033A
1N1991A	146A
1N1991B	146A
1N1992	5036A
1N1992A	147A
1N1992B	147A
1N1993	5038A
1N1994	5040A

PART NUMBER	NTE REPLACEMENT
1N1995	5042A
1N1996	5045A
1N1997	5047A
1N1997A	150A
1N1998	5050A
1N1999	5052A
1N2000	5055A
1N2001	5058A
1N2001A	5058A
1N2001B	5058A
1N2008	5220A
1N2008A	5220A
1N2008AR	5220AK
1N2008R	5220AK
1N2009	5222A
1N2010	5223A
1N2010A	5223A
1N2010AR	5223AK
1N2010R	5223AK
1N2011	5224A
1N2012	526A
1N2012A	5227A
1N2012AR	5226AK
1N2012R	5226AK
1N2013	5800
1N2014	5801
1N2015	5802
1N2016	5802
1N2017	5803
1N2018	5803
1N2019	5804
1N2020	5804
1N2021	5944
1N2022	5946
1N2023	5946
1N2024	5948
1N2025	5948
1N2026	5830
1N2027	5834
1N2028	5836
1N2029	5838
1N2030	5840
1N2031	5842
1N2032	5069A
1N2032-2	135A
1N2032A	5069A
1N2033	5070A
1N2033-2	5070A
1N2033A	136A
1N2034	5071A
1N2034-2	5071A
1N2034-3	138A
1N2034A	5071A
1N2035	5073A
1N2035-1	139A
1N2035-12	5073A
1N2035A	5072A
1N2036	140A
1N2036-2	5074A
1N2037	143A
1N2037-1	142A
1N2037-2	143A
1N2037-3	144A
1N2037A	142A
1N2038	5075A
1N2038-1	145A
1N2038-2	5075A
1N2038-3	5076A
1N2038A	145A
1N2039	5078A
1N2039-1	5077A
1N2039-2	5078A
1N2039-3	5079A
1N2039A	5077A
1N2040	5081A
1N2040-2	5081A
1N2040-3	5082A
1N2040-4	5083A
1N2040A	5080A
1N2041	5176A
1N2041-1	5176AK
1N2041-2	5177A
1N2041A	5176A
1N2041B	5177AK
1N2041C	5177AK
1N2042	5179AK
1N2042-1	5178AK
1N2042-2	5179AK
1N2042A	5178AK
1N2042B	5179AK
1N2042C	5179AK
1N2043	5181AK
1N2043-1	5181AK
1N2043-2	5181AK
1N2043-3	5182AK
1N2043B	5181AK
1N2043C	5182AK
1N2044	5184AK
1N2044-1	5183AK
1N2044-2	5184AK
1N2044-3	5185AK
1N2044A	5016A
1N2044B	5184AK
1N2044C	5184AK
1N2045	5186AK
1N2045-1	5186A
1N2045-2	5187AK
1N2045A	5186AK
1N2045B	5186AK
1N2045C	5186AK
1N2046	5189A
1N2046-1	5188A
1N2046-2	5189AK
1N2046-3	5190AK
1N2046A	5188AK
1N2046B	5189AK
1N2046C	5190AK
1N2046R	5188AK
1N2047	5192AK
1N2047-1	5191A
1N2047-2	5192AK
1N2047-3	5193AK
1N2047A	5191AK
1N2047B	5192AK
1N2047C	5193AK
1N2048	5195AK
1N2048-1	5194A
1N2048-2	5195AK
1N2048-3	5196AK
1N2048A	5194AK
1N2048B	5195AK
1N2048C	5195AK
1N2049	5198AK
1N2049-1	5197A
1N2049-2	5198AK
1N2049-3	5200AK
1N2049-4	5201AK
1N2049A	5197A
1N2049B	5198AK
1N2049C	5082A
1N2050AR	5987
1N2050BR	5987
1N2054	6354
1N2055	6354
1N2056	6354
1N2057	6354
1N2058	6354
1N2059	6354
1N2060	6354
1N2061	6354
1N2062	6356
1N2063	6356
1N2064	6356
1N2065	6358
1N2066	6358
1N2067	6358
1N2068	6358
1N2069	116
1N2069A	116
1N2070	116
1N2070A	116
1N2071	116
1N2071A	116
1N2072	117
1N2073	117
1N2074	117
1N2075	117
1N2075K	177
1N2076	117
1N2076A	519
1N2077	117
1N2078	117
1N2079	117
1N2080	117
1N2081	117
1N2082	117
1N2083	117
1N2084	117
1N2085	117
1N2086	117
1N2088	116
1N2089	116
1N2090	116
1N2091	116
1N2092	116
1N2093	116
1N2094	116
1N2095	116
1N2096	116
1N2103	117
1N2104	117
1N2105	117
1N2106	117
1N2107	117
1N2108	117
1N2109	5830
1N2115	117
1N2116	116
1N2117	117
1N2128	6020
1N2128A	6020
1N2128AR	6021
1N2128R	6021
1N2128RA	6021
1N2129	6022
1N2129A	6022
1N2129AR	6023
1N2129R	6023
1N2129RA	6023
1N2130	6026
1N2130A	6026
1N2130AR	6027
1N2130R	6027
1N2130RA	6027
1N2131	6026
1N2131A	6026
1N2131AR	6027
1N2131R	6027
1N2131RA	6027
1N2132	6030
1N2132A	6030
1N2132AR	6031
1N2132R	6031
1N2133	6030
1N2133A	6030
1N2133AR	6031
1N2133R	6031
1N2133RA	6030
1N2134	6034
1N2134A	6034
1N2134AR	6035
1N2134R	6035
1N2135	6034
1N2135A	6034
1N2135AR	6035
1N2135R	6035
1N2135RA	6035
1N2136	6038
1N2136A	6038
1N2136AR	6039
1N2136R	6039
1N2137	6038
1N2137A	6038
1N2137AR	6039
1N2137R	6039
1N2137RA	6039
1N2138	6040
1N2138A	6040
1N2138AR	6041
1N2138R	6041
1N2138RA	6041
1N2139	6040
1N2139A	6040
1N2139AR	6041
1N2139R	6041
1N2147	5850
1N2147A	5850
1N2148	5852
1N2148A	5852
1N2149	5854
1N2149A	5854
1N2150	5856
1N2150A	5856
1N2151	5860
1N2151A	5858
1N2152A	5860
1N2153	5862
1N2153A	5862
1N2154	5980
1N2154R	5981
1N2155	5982
1N2155R	5983
1N2157	5988
1N2157R	5989
1N2158	5990
1N2158R	5991
1N2159	5992
1N2159R	5993
1N2160	5994
1N2160R	5995
1N2172	6154
1N2173	6154
1N2174	6154
1N2181	116
1N2214	136A
1N2216	5830
1N2217	5830
1N2218	5840
1N2219	5840
1N2220	5842
1N2221	5842
1N2222	5846
1N2222A	5846
1N2222B	5804
1N2222R	5847
1N2222RA	5847
1N2223	5846
1N2223A	5846
1N2223B	5805
1N2224	5848
1N2224A	5848
1N2224R	5849
1N2224RA	5849
1N2225	5848
1N2225A	5848
1N2225B	5808
1N2226	5808
1N2226A	5808
1N2226B	5808
1N2228	5850
1N2228A	5850
1N2229	5850
1N2229A	5850
1N2230	5854
1N2230A	5854
1N2231	5854
1N2231A	5854
1N2232	5856
1N2232A	5856
1N2233	5856
1N2233A	5856
1N2234	5850
1N2234A	5850
1N2235	5858
1N2235A	5858
1N2236	5860
1N2236A	5860
1N2237	5860
1N2237A	5860
1N2238	5862
1N2238A	5862
1N2239	5862
1N2239A	5862
1N2240	5866
1N2240A	5866
1N2241	5866
1N2241A	5866
1N2242	5868
1N2242A	5868
1N2243	5868
1N2243A	5868
1N2246	5870
1N2246A	5870
1N2247	5870
1N2247A	5870
1N2248	5872
1N2248A	5872
1N2249	5872
1N2249A	5872
1N2250	5874
1N2250A	5874
1N2251	5874
1N2251A	5874
1N2252	5876
1N2252A	5876
1N2253	5876
1N2253A	5876
1N2254	5878
1N2254A	5878
1N2255	5878
1N2255A	5878
1N2256	5880
1N2256A	5880
1N2257	5880
1N2257A	5880
1N2258	5882
1N2258A	5882
1N2259	5882
1N2259A	5882
1N2260	5886
1N2260A	5886
1N2260RA	5887
1N2261	5886
1N2261A	5886
1N2262	5890
1N2262A	5890
1N2262R	5891
1N2262RA	5891
1N2263	5890
1N2263A	5890
1N2266	5830
1N2267	5830
1N2268	5840
1N2268R	5843
1N2269	5840
1N2270	5842
1N2270R	5843
1N2271	5842
1N2272	5912
1N2273	5914
1N2274	5916
1N2275	5918
1N2276	5922
1N2277	5924
1N2278	5928
1N2279	5928
1N2280	5932
1N2282	5988
1N2283	5990
1N2284	5992
1N2285	5994
1N2286	5998
1N2287	6002
1N2289	5830
1N2289A	5830
1N2290	5830
1N2290A	5830
1N2291	5834
1N2291A	5836
1N2291RA	5839
1N2292	5836
1N2292A	5836
1N2292RA	5839
1N2293	5838
1N2293A	5838
1N2293RA	5839
1N2323	116
1N2327	506
1N2348	5830
1N2349	5832
1N2350	5834
1N2350R	5835
1N2357	506
1N2372	5848
1N2373	117
1N2374	5808
1N2387	5084A
1N2390	5800
1N2391	5801
1N2392	5802
1N2393	5803
1N2394	5804
1N2395	5805
1N2396	5806
1N2397	5808
1N2398	5808
1N2399	5800
1N2400	5801
1N2401	5802
1N2402	5803
1N2403	5804
1N2404	5805
1N2405	5806
1N2406	5808
1N2407	5808
1N2408	5800
1N2409	5801
1N2410	5802
1N2411	5803
1N2412	5804
1N2413	5805
1N2414	5806
1N2415	5808
1N2416	5808
1N2422	116
1N2423	116
1N2424	125
1N2425	125
1N2426	6154
1N2427	6154
1N2428	6154
1N2429	6154
1N2430	6154
1N2431	6154
1N2432	6154
1N2433	6154
1N2434	6156
1N2435	6156
1N2436	6154
1N2437	6154
1N2438	6154
1N2439	6154
1N2440	6154
1N2443	6154
1N2444	6156
1N2445	6156
1N2446	6020
1N2447	6022
1N2448	6026
1N2449	5990
1N2450	6030
1N2451	6030
1N2452	6034
1N2453	6034
1N2454	6038
1N2455	6040
1N2456	6042
1N2457	6042
1N2458	6020
1N2459	6022
1N2460	6026
1N2461	6026
1N2462	6030
1N2463	6030
1N2464	6034
1N2465	6034
1N2466	6038
1N2467	6040
1N2468	6042
1N2469	6042
1N2473	177
1N2482	5802
1N2483	5804
1N2484	5806
1N2485	117
1N2486	117
1N2487	117
1N2488	117
1N2489	117
1N2491	5850
1N2492	5852
1N2493	5854
1N2494	5856
1N2495	5858
1N2496	5860
1N2497	5862
1N2498	5186A
1N2498A	5186A
1N2498AR	5186AK
1N2498C	5186A
1N2498R	5186AK
1N2498RA	5186AK
1N2498RC	5186AK
1N2499	5187A
1N2499A	5187A
1N2499C	5187A
1N2499R	5187AK
1N2499RA	5187AK
1N2499RC	5187AK
1N2500	5188A
1N2500A	5188A
1N2500AR	5188AK
1N2500B	5188A
1N2500C	5188A
1N2500CA	5188A
1N2500R	5188AK
1N2500RA	5188AK
1N2500RB	5188AK
1N2500RC	5188AK
1N2500RCA	5188AK
1N2501	117
1N2502	5809
1N2503	506
1N2504	506
1N2505	5808
1N2506	5809
1N2507	506
1N2508	506
1N2512	5832
1N2513	5834
1N2514	5836
1N2515	5838
1N2516	5860
1N2517	5842
1N2518	5832
1N2519	5854
1N2520	5836
1N2521	5838
1N2522	5860
1N2523	5842
1N2524	5830
1N2525	5832
1N2526	5834
1N2527	5836
1N2528	5838
1N2529	5840
1N2530	5842
1N2531	5846
1N2532	5846
1N2533	5848
1N2534	5848
1N2535	5830
1N2536	5832
1N2537	5834
1N2538	5836
1N2539	5838
1N2540	5840
1N2541	5842
1N2542	5846
1N2543	5846
1N2544	5848
1N2545	5848
1N2546	5830
1N2547	5832
1N2548	5834
1N2549	5836
1N2550	5838
1N2551	5840
1N2552	5842
1N2553	5846
1N2554	5846
1N2555	5848
1N2556	5848
1N2557	5866
1N2558	5866
1N2559	5868
1N2560	5868
1N2561	5866
1N2562	5866
1N2563	5868
1N2564	5868
1N2565	5850
1N2566	5852
1N2567	5854
1N2568	5856
1N2569	5858
1N2570	5860
1N2571	5862
1N2572	5866
1N2573	5866
1N2574	5868
1N2575	5868
1N2576	5870
1N2577	5872
1N2578	5874
1N2579	5876
1N2580	5878
1N2581	5880
1N2582	5882
1N2583	5886
1N2584	5886
1N2585	5890
1N2586	5890
1N2587	5870
1N2588	5872
1N2589	5874
1N2590	5876
1N2591	5878
1N2592	5880
1N2593	5882
1N2594	5886
1N2595	5886
1N2596	5890
1N2597	5890
1N2598	5870
1N2599	5872
1N2600	5874
1N2601	5876
1N2602	5878
1N2603	5880
1N2604	5882
1N2605	5886
1N2606	5886
1N2607	5890
1N2608	5890
1N2609	117
1N2610	117
1N2611	117
1N2612	117
1N2613	117
1N2614	117
1N2615	117
1N2616	5808
1N2617	5809
1N2618	506
1N2619	506
1N2638	116
1N2650	116
1N2653	125
1N2702	5832
1N2750	5832
1N2765	5014A
1N2765A	5014A
1N2766	5023A
1N2766A	5023A
1N2767	5079A
1N2767A	5079A
1N2768	146A
1N2768A	146A
1N2772	5808
1N2773	5808
1N2774	5809
1N2775	5809
1N2776	506
1N2777	506
1N2778	506
1N2779	506
1N2783	5150A
1N2784	5916
1N2785	5920
1N2786	5944
1N2786R	5945
1N2787	5948
1N2787R	5949
1N2788	6026
1N2788R	6027
1N2789	6034
1N2789R	6035
1N2790	5073A
1N2793	5940
1N2794	5942
1N2795	5944
1N2796	5944
1N2797	5946
1N2798	5946
1N2799	5948
1N2800	5948
1N2801	109
1N2847	5832
1N2848	5834
1N2849	5836
1N2850	5838
1N2851	5840
1N2852	5842
1N2858	117
1N2858A	5800
1N2859	117
1N2859A	5801
1N2860	117
1N2860A	5802
1N2861	117
1N2861A	5803
1N2862	117
1N2862A	5804
1N2863	117
1N2863A	5805
1N2864	117
1N2864A	5806
1N2865	5808
1N2866	5809
1N2867	5808
1N2868	5809
1N2878	5808
1N2879	5808
1N2880	5809
1N2881	5809
1N2882	5809
1N2883	5809
1N2884	506
1N2885	506
1N2887R	5995
1N2951	109
1N2970	5181A
1N2970A	5181A
1N2970AR	5181AK
1N2970B	5181A
1N2970BR	5181AK
1N2970R	5181AK
1N2970RA	5181AK
1N2970RB	5181AK
1N2971	5182A
1N2971A	5182A
1N2971B	5182A
1N2971R	5182AK
1N2971RA	5182AK
1N2971RB	5182AK
1N2972	5183A
1N2972A	5183A
1N2972B	5183A
1N2972BR	5183AK
1N2972R	5183AK
1N2972RA	5183AK
1N2972RB	5183AK
1N2973	5185A
1N2973A	5185A
1N2973B	5185A
1N2973R	5185AK
1N2973RA	5185AK
1N2973RB	5185AK
1N2974	5186A
1N2974A	5186A
1N2974AR	5186AK
1N2974B	5186A
1N2974R	5186AK
1N2974RA	5186AK
1N2974RB	5186AK
1N2975	5187A
1N2975A	5187A
1N2975B	5187A
1N2975R	5187AK
1N2975RA	5187AK
1N2975RB	5187AK
1N2976	5188A
1N2976A	5188A
1N2976AR	5188AK
1N2976B	5188A
1N2976BR	5188AK
1N2976R	5188AK
1N2976RA	5188AK
1N2976RB	5188AK
1N2976RC	5188AK
1N2977	5189A
1N2977A	5189A
1N2977B	5189A
1N2977R	5189AK
1N2977RA	5189AK
1N2977RB	5189AK
1N2978	5190A
1N2978A	5190A
1N2978B	5190A
1N2978R	5190AK
1N2978RA	5190AK
1N2978RB	5190AK
1N2979	5191A
1N2979A	5191A
1N2979AR	5191AK
1N2979B	5191A
1N2979BR	5191AK

PART NUMBER	NTE REPLACEMENT
1N2979R	5191AK
1N2979RA	5191AK
1N2979RB	5191AK
1N2980	5192A
1N2980A	5192A
1N2980B	5192A
1N2980R	5192AK
1N2980RA	5192AK
1N2980RB	5192AK
1N2981	5193A
1N2981A	5193A
1N2981B	5193A
1N2981R	5193AK
1N2981RA	5193AK
1N2981RB	5193AK
1N2982	5194A
1N2982A	5194A
1N2982AR	5194AK
1N2982B	5194A
1N2982BR	5194AK
1N2982R	5194AK
1N2982RA	5194AK
1N2982RB	5194AK
1N2983	5195A
1N2983A	5195A
1N2983B	5195A
1N2983R	5195AK
1N2983RA	5195AK
1N2983RB	5195AK
1N2984	5196A
1N2984A	5196A
1N2984B	5196A
1N2984R	5196AK
1N2984RA	5196AK
1N2984RB	5196AK
1N2985	5197A
1N2985A	5197A
1N2985AR	5197AK
1N2985B	5197A
1N2985BR	5197AK
1N2985R	5197AK
1N2985RA	5197AK
1N2985RB	5197AK
1N2986	5198A
1N2986A	5198A
1N2986AN	5198AK
1N2986B	5198A
1N2986R	5198AK
1N2986RA	5198AK
1N2986RB	5198AK
1N2987A	5199A
1N2987B	5199A
1N2987R	5199A
1N2987RA	5199AK
1N2987RB	5199AK
1N2988	5200A
1N2988A	5200A
1N2988AR	5200AK
1N2988B	5200A
1N2988BR	5200AK
1N2988R	5200AK
1N2988RA	5200AK
1N2988RB	5200AK
1N2989	5202A
1N2989A	5202A
1N2989B	5202A
1N2989R	5202AK
1N2989RA	5202AK
1N2989RB	5202AK
1N2990	5203A
1N2990A	5203A
1N2990AR	5203AK
1N2990B	5203A
1N2990BR	5203AK
1N2990R	5203A
1N2990RA	5203AK
1N2990RB	5203AK
1N2991	5204A
1N2991A	5204A
1N2991B	5204A
1N2991R	5204AK
1N2991RA	5204AK
1N2991RB	5204AK
1N2992	5205A
1N2992A	5205A
1N2992AR	5205AK
1N2992B	5205A
1N2992BR	5205AK
1N2992R	5205AK
1N2992RA	5205AK
1N2992RB	5205AK
1N2993	5206A
1N2993A	5206A
1N2993B	5206A
1N2993R	5206AK
1N2993RA	5206AK
1N2993RB	5206AK
1N2994	5207A
1N2994A	5207A
1N2994B	5207A
1N2994R	5207AK
1N2994RA	5207AK
1N2994RB	5207AK
1N2995	5208A
1N2995A	5208A
1N2995AR	5208AK
1N2995B	5208A
1N2995BR	5208AK
1N2995R	5208AK
1N2995RA	5208AK
1N2995RB	5208AK
1N2996	5209A
1N2996A	5209A
1N2996B	5209A
1N2996R	5209AK
1N2996RA	5209AK
1N2996RB	5209AK
1N2997	5210A
1N2997A	5210A
1N2997B	5210A
1N2997R	5210AK
1N2997RA	5210AK
1N2997RB	5210AK
1N2998	5211A
1N2998A	5211A
1N2998B	5211A
1N2998R	5211AK
1N2998RA	5211AK
1N2998RB	5211AK
1N2999	5212A
1N2999A	5212A
1N2999AR	5212AK
1N2999B	5212A
1N2999BR	5212AK
1N2999R	5212AK
1N2999RA	5212AK
1N2999RB	5212AK
1N3000	5214A
1N3000A	5214A
1N3000B	5214A
1N3000R	5214AK
1N3000RA	5214AK
1N3000RB	5214AK
1N3001	5215A
1N3001A	5215A
1N3001AR	5215AK
1N3001B	5215A
1N3001BR	5215AK
1N3001R	5215AK
1N3001RA	5215AK
1N3001RB	5215AK
1N3002	5216A
1N3002A	5216A
1N3002B	5216A
1N3002R	5216AK
1N3002RA	5216AK
1N3002RB	5216AK
1N3003	5217A
1N3003A	5217A
1N3003B	5217A
1N3003BR	5217AK
1N3003R	5217AK
1N3003RA	5217AK
1N3003RB	5217AK
1N3004	5219A
1N3004A	5219A
1N3004B	5219A
1N3004R	5219AK
1N3004RA	5219AK
1N3004RB	5219AK
1N3005	5220A
1N3005A	5220A
1N3005AR	5220AK
1N3005B	5220A
1N3005BR	5220AK
1N3005R	5220AK
1N3005RA	5220AK
1N3005RB	5220AK
1N3006	5221A
1N3006A	5221A
1N3006B	5221A
1N3006R	5221AK
1N3006RA	5221AK
1N3006RB	5221AK
1N3007	5222A
1N3007A	5222A
1N3007B	5222A
1N3007R	5222AK
1N3007RA	5222AK
1N3007RB	5222AK
1N3008	5223A
1N3008A	5223A
1N3008AR	5223AK
1N3008B	5223A
1N3008BR	5223AK
1N3008R	5223AK
1N3008RA	5223AK
1N3008RB	5223AK
1N3009	5224A
1N3009A	5224A
1N3009B	5224A
1N3009R	5224AK
1N3009RA	5224AK
1N3009RB	5224AK
1N3010	5225A
1N3010A	5225A
1N3010B	5225A
1N3010R	5225AK
1N3010RA	5225AK
1N3010RB	5225AK
1N3011	5226A
1N3011A	5226A
1N3011AR	5226AK
1N3011B	5226A
1N3011BR	5226AK
1N3011R	5226AK
1N3011RA	5226AK
1N3011RB	5226AK
1N3012	5227A
1N3012A	5227A
1N3012B	5227A
1N3012R	5227AK
1N3012RA	5227AK
1N3012RB	5227AK
1N3013	5229A
1N3013A	5229A
1N3013B	5229A
1N3013R	5229AK
1N3013RA	5229AK
1N3013RB	5229AK
1N3014	5230A
1N3014A	5230A
1N3014AR	5230AK
1N3014B	5230A
1N3014BR	5230AK
1N3014R	5230AK
1N3014RA	5230AK
1N3014RB	5230AK
1N3015	5232A
1N3015A	5232A
1N3015B	5232A
1N3015R	5232AK
1N3015RA	5232AK
1N3015RB	5232AK
1N3016	5071A
1N3016A	5071A
1N3016B	5071A
1N3017	138A
1N3017A	138A
1N3017B	138A
1N3018	5072A
1N3018A	5072A
1N3018B	5072A
1N3018BA	5072A
1N3019	139A
1N3019A	139A
1N3019B	139A
1N3020	140A
1N3020A	140A
1N3020B	140A
1N3021	5074A
1N3021A	5074A
1N3021B	5074A
1N3022	142A
1N3022A	142A
1N3022B	142A
1N3023	143A
1N3023A	143A
1N3023B	143A
1N3024	145A
1N3024A	145A
1N3024B	145A
1N3025	5075A
1N3025A	5075A
1N3025B	5075A
1N3026	5077A
1N3026A	5077A
1N3026B	5077A
1N3027	5079A
1N3027A	5079A
1N3027B	5079A
1N3028	5080A
1N3028A	5080A
1N3028B	5080A
1N3029	5081A
1N3029A	5081A
1N3029B	5081A
1N3030	146A
1N3030A	146A
1N3030B	146A
1N3031	5084A
1N3031A	5084A
1N3031B	5084A
1N3032	147A
1N3032A	147A
1N3032B	147A
1N3033	5085A
1N3033A	5085A
1N3033B	5085A
1N3034	5086A
1N3034A	5086A
1N3034B	5086A
1N3035	5087A
1N3035A	5087A
1N3035B	5087A
1N3036	5088A
1N3036A	5088A
1N3036B	5088A
1N3037	5089A
1N3037A	5089A
1N3037B	5089A
1N3038	5090A
1N3038A	5090A
1N3038B	5090A
1N3039	149A
1N3039A	149A
1N3039B	149A
1N3040	5092A
1N3040A	5092A
1N3040B	5092A
1N3041	5093A
1N3041A	5093A
1N3041B	5093A
1N3042	150A
1N3042A	150A
1N3042B	150A
1N3043	5095A
1N3043A	5095A
1N3043B	5095A
1N3044	5096A
1N3044A	5096A
1N3044B	5096A
1N3045	151A
1N3045A	151A
1N3045B	151A
1N3046	5097A
1N3046A	5097A
1N3046B	5097A
1N3047	5098A
1N3047A	5098A
1N3047B	5098A
1N3048	5100A
1N3048A	5100A
1N3048B	5100A
1N3049	5101A
1N3049A	5101A
1N3049B	5101A
1N3050	5103A
1N3050A	5103A
1N3050B	5103A
1N3051	5105A
1N3051A	5105A
1N3051B	5105A
1N3062	519
1N3063	519
1N3064	519
1N3065	519
1N3066	519
1N3067	519
1N3068	177
1N3069	177
1N3069M	177
1N3070	177
1N3071	177
1N3072	117
1N3073	117
1N3074	117
1N3075	117
1N3076	117
1N3077	117
1N3078	117
1N3079	117
1N3080	117
1N3081	117
1N3082	117
1N3083	117
1N3084	117
1N3094	116
1N3098	5097A
1N3098A	5097A
1N3099	5100A
1N3099A	5100A
1N3100	5103A
1N3100A	5103A
1N3102	5223A
1N3102A	5223A
1N3103	5226A
1N3103A	5226A
1N3104	5230A
1N3106	5806
1N3107	5809
1N3108	139A
1N3109	5848
1N3110	109
1N3112	128
1N3121	109
1N3122	109
1N3123	177
1N3124	177
1N3125	109
1N3130	5160A
1N3139	6050
1N3142	6026
1N3146	109
1N3147	177
1N3148	5017A
1N3160	116
1N3161	6354
1N3162	6354
1N3163	6354
1N3164	6354
1N3165	6354
1N3166	6354
1N3167	6354
1N3168	6354
1N3169	6356
1N3170	6356
1N3171	6358
1N3172	6358
1N3173	6358
1N3181	138A
1N3182	614
1N3183	116
1N3184	116
1N3185	125
1N3186	125
1N3189	116
1N3190	116
1N3191	116
1N3191B	5101A
1N3193	116
1N3194	116
1N3195	117
1N3196	125
1N3197	177
1N3199	5016A
1N3203	116
1N3204	109
1N3206	177
1N3207	177
1N3208	5940
1N3208R	5941
1N3209	5942
1N3209R	5943
1N3210	5944
1N3210#	5994
1N3210R	5945
1N3211	5946
1N3211R	5947
1N3212	5948
1N3212R	5949
1N3213	5950
1N3213R	5951
1N3214	5952
1N3214R	5953
1N3221	125
1N3223	177
1N3227	5801
1N3228	5802
1N3229	5805
1N3230	5806
1N3231	5808
1N3232	5809
1N3233	506
1N3237	5800
1N3238	5801
1N3239	5802
1N3240	5804
1N3241	5806
1N3242	5808
1N3243	5809
1N3244	506
1N3246	5800
1N3247	5801
1N3248	5802
1N3249	5804
1N3250	5806
1N3251	5808
1N3252	5809
1N3253	117
1N3254	117
1N3255	117
1N3256	5808
1N3257	177
1N3258	177
1N3260	5354
1N3260R	5355
1N3261	5354
1N3261R	5355
1N3262	5354
1N3262R	5355
1N3263	5354
1N3263R	5355
1N3264	5354
1N3264R	5355
1N3265	5354
1N3265R	5355
1N3266	5354
1N3266R	5355
1N3267	5354
1N3267R	5355
1N3268	5356
1N3268R	5357
1N3269	5356
1N3269R	5357
1N3270	5358
1N3270R	5359
1N3271	5358
1N3271R	5359
1N3272	5358
1N3272R	5359
1N3273	5358
1N3273R	5359
1N3274	5362
1N3274R	5363
1N3275	5362
1N3275R	5363
1N3277	116
1N3278	116
1N3279	116
1N3280	125
1N3281	125
1N3282	125
1N3283	525
1N3287	109
1N3287N	109
1N3287W	5029A
1N3288	6154
1N3288A	6154
1N3288AR	6155
1N3288RA	6155
1N3289	6154
1N3289A	6154
1N3289AR	6155
1N3289R	6155
1N3289RA	6155
1N3290	6154
1N3290A	6154
1N3290AR	6155
1N3290R	6155
1N3290RA	6155
1N3291	6154
1N3291A	6154
1N3291AR	6155
1N3291R	6155
1N3291RA	6155
1N3292	6156
1N3292A	6156
1N3292AR	6157
1N3292R	6157
1N3292RA	6157
1N3293	6156
1N3293A	6156
1N3293AR	6157
1N3293R	6157
1N3293RA	6157
1N3294	6158
1N3294A	6158
1N3294AR	6159
1N3294R	6159
1N3294RA	6159
1N3295	6158
1N3295A	6158
1N3295AR	6159
1N3295R	6159
1N3295RA	6159
1N3296	6162
1N3296A	6162
1N3296AR	6163
1N3296R	6163
1N3296RA	6163
1N3297A	6162
1N3297AR	6163
1N3298	116
1N3298A	6154
1N3301	6407
1N3301A	6407
1N3302	6408
1N3302A	6408
1N3303A	6408
1N3305	5247A
1N3305A	5247A
1N3305AR	5247AK
1N3305B	5247A
1N3305BR	5247AK
1N3305R	5247AK
1N3305RA	5247AK
1N3305RB	5247A
1N3306	5248A
1N3306A	5248A
1N3306B	5248A
1N3306R	5248AK
1N3306RA	5248AK
1N3306RB	5248AK
1N3307	5249A
1N3307A	5249A
1N3307AR	5249AK
1N3307B	5249A
1N3307BR	5249AK
1N3307R	5249A
1N3307RA	5249A
1N3307RB	5249A
1N3308	5251A
1N3308A	5251A
1N3308B	5251A
1N3308R	5251AK
1N3308RA	5251AK
1N3308RB	5251AK
1N3309	5252A
1N3309A	5252A
1N3309AR	5252AK
1N3309B	5252A
1N3309BR	5252AK
1N3309R	5252AK
1N3309RA	5252AK
1N3309RB	5252AK
1N3310	5253A
1N3310A	5253A
1N3310R	5253AK
1N3310RA	5253AK
1N3310RB	5253AK
1N3311	5254A
1N3311A	5254A
1N3311AR	5254AK
1N3311B	5254A
1N3311BR	5254AK
1N3311R	5254AK
1N3311RA	5254AK
1N3311RB	5254AK
1N3312	5255A
1N3312A	5255A
1N3312B	5255A
1N3312RA	5255AK
1N3312RB	5255AK
1N3313	5256A
1N3313A	5256A
1N3313B	5256A
1N3313R	5256AK
1N3313RA	5256AK
1N3313RB	5256AK
1N3314	5257A
1N3314A	5257A
1N3314AR	5257AK
1N3314B	5257A
1N3314BR	5257AK
1N3314R	5257AK
1N3314RA	5257AK
1N3314RB	5257AK
1N3315	5258A
1N3315A	5258A
1N3315B	5258A
1N3315R	5258AK
1N3315RA	5258AK
1N3315RB	5258AK
1N3316	5259A
1N3316A	5259A
1N3316B	5259A
1N3316R	5259AK
1N3316RA	5259AK
1N3316RB	5259AK
1N3317	5260A
1N3317A	5260A
1N3317AR	5260AK
1N3317B	5260A
1N3317BR	5260AK
1N3317R	5260AK
1N3317RA	5260AK
1N3317RB	5260AK
1N3318	5261A
1N3318A	5261A
1N3318B	5261A
1N3318R	5261AK
1N3318RA	5261AK
1N3318RB	5261AK
1N3319	5262A
1N3319A	5262A
1N3319B	5262A
1N3319R	5262AK
1N3319RA	5262AK
1N3319RB	5262AK
1N3320	5263A
1N3320A	5263A
1N3320AR	5263AK
1N3320B	5263A
1N3320BR	5263AK
1N3320R	5263AK
1N3320RA	5263AK
1N3320RB	5263AK
1N3321	5264A
1N3321A	5264A
1N3321B	5264A
1N3321R	5264AK
1N3321RA	5264AK
1N3321RB	5264AK
1N3322	5265A
1N3322A	5265A
1N3322B	5265A
1N3322R	5265AK
1N3322RA	5265AK
1N3322RB	5265AK
1N3323	5266A
1N3323A	5266A
1N3323AR	5266AK
1N3323B	5266A
1N3323BR	5266AK
1N3323R	5266AK
1N3323RA	5266AK
1N3323RB	5266AK
1N3324	5268A
1N3324A	5268A
1N3324B	5268A
1N3324R	5268AK
1N3324RA	5268AK
1N3324RB	5268AK
1N3325	5269A
1N3325A	5269A
1N3325AR	5269AK
1N3325B	5269A
1N3325BR	5269AK
1N3325R	5296AK
1N3325RA	5296AK
1N3325RB	5269AK
1N3326	5270A
1N3326A	5270A
1N3326B	5270A
1N3326R	5270AK
1N3326RA	5270AK
1N3326RB	5270AK
1N3327	5271A
1N3327A	5271A
1N3327AR	5271AK
1N3327B	5271A
1N3327BR	5271AK
1N3327R	5271AK
1N3327RA	5271AK
1N3327RB	5271AK
1N3328	5272A
1N3328A	5272A
1N3328B	5272A
1N3328R	5272AK
1N3328RA	5272AK
1N3328RB	5272AK
1N3329	5273A
1N3329A	5273A
1N3329B	5273A
1N3329BR	5273AK
1N3329R	5273AK
1N3329RA	5273AK
1N3329RB	5273AK
1N3330	5274A
1N3330A	5274A
1N3330B	5274A
1N3330R	5274AK
1N3330RA	5274AK
1N3330RB	5274AK
1N3331	5275A
1N3331A	5275A
1N3331B	5275A
1N3331R	5275AK
1N3331RA	5275AK
1N3331RB	5275AK
1N3332	5276A
1N3332A	5276A
1N3332B	5276A
1N3332R	5276AK
1N3332RA	5276AK
1N3332RB	5276AK
1N3333	5277A
1N3333A	5277A
1N3333B	5277A
1N3333R	5277AK
1N3333RA	5277AK
1N3333RB	5277AK
1N3334	5278A
1N3334A	5278A
1N3334AR	5278AK
1N3334B	5278A
1N3334BR	5278AK
1N3334R	5278AK
1N3334RA	5278AK
1N3334RB	5278AK
1N3335	5280A
1N3335A	5280A
1N3335B	5280A
1N3335R	5280AK
1N3335RA	5280AK
1N3335RB	5280AK
1N3336	5281A
1N3336A	5281A
1N3336B	5281A
1N3336R	5281AK
1N3336RA	5281AK
1N3336RB	5281AK
1N3337	5282A
1N3337A	5282A
1N3337B	5282A
1N3337R	5282AK
1N3337RA	5282AK

PART NUMBER	NTE REPLACEMENT
1N3337RB	5282AK
1N3338	5283A
1N3338A	5283A
1N3338B	5283A
1N3338R	5283AK
1N3338RA	5283AK
1N3338RB	5283AK
1N3339	5284A
1N3339A	5284A
1N3339B	5284A
1N3339R	5284AK
1N3339RA	5284AK
1N3339RB	5284AK
1N3340	5285A
1N3340A	5285A
1N3340AR	5285AK
1N3340B	5285A
1N3340BR	5285AK
1N3340R	5285AK
1N3340RA	5285AK
1N3340RB	5285AK
1N3341	5286A
1N3341A	5286A
1N3341B	5286A
1N3341R	5286AK
1N3341RA	5286AK
1N3341RB	5286AK
1N3342	5287A
1N3342A	5287A
1N3342B	5287A
1N3342R	5287AK
1N3342RA	5287AK
1N3342RB	5287AK
1N3343	5288A
1N3343A	5288A
1N3343B	5288A
1N3343R	5288AK
1N3343RA	5288AK
1N3343RB	5288AK
1N3344	5289A
1N3344A	5289A
1N3344B	5289A
1N3344R	5289AK
1N3344RA	5289AK
1N3344RB	5289AK
1N3345	5290A
1N3345A	5290A
1N3345B	5290A
1N3345R	5290AK
1N3345RA	5290AK
1N3345RB	5290AK
1N3346	5291A
1N3346A	5291A
1N3346B	5291A
1N3346R	5291AK
1N3346RA	5291AK
1N3346RB	5291AK
1N3347	5292A
1N3347A	5292A
1N3347B	5292A
1N3347R	5292AK
1N3347RA	5292AK
1N3347RB	5292AK
1N3348	5293A
1N3348A	5293A
1N3348B	5293A
1N3348R	5293AK
1N3348RA	5293AK
1N3348RB	5293AK
1N3349	5294A
1N3349A	5294A
1N3349B	5294A
1N3349R	5294AK
1N3349RA	5294AK
1N3349RB	5294AK
1N3350	5296A
1N3350A	5296A
1N3350B	5296A
1N3350R	5296AK
1N3350RA	5296AK
1N3350RB	5296AK
1N3396	5005A
1N3399	136A
1N3400	5014A
1N3401	5016A
1N3401-0	5072A
1N3402	5019A
1N3403	5021A
1N3404	5024A
1N3405	5027A
1N3406	5030A
1N3407	5033A
1N3408	5036A
1N3409	5038A
1N3410	5040A
1N3411	5013A
1N3412	5014A
1N3413	5015A
1N3414	5016A
1N3415	5019A
1N3416	5021A
1N3417	5024A
1N3418	5027A
1N3419	5030A
1N3420	5033A
1N3421	5035A
1N3422	5036A
1N3423	5038A
1N3424	5040A
1N3425	5042A
1N3426	5045A
1N3427	5047A
1N3428	5050A
1N3429	5052A
1N3430	5055A
1N3431	5058A
1N3433	5072A
1N3434	140A
1N3435	142A
1N3436	145A
1N3437	5077A
1N3438	5080A
1N3439	146A
1N3440	147A
1N3441	5086A
1N3442	5088A
1N3443	137A
1N3445	5072A
1N3446	140A
1N3447	142A
1N3448	145A
1N3449	5077A
1N3450	5080A
1N3451	146A
1N3452	5084A
1N3453	147A
1N3454	5086A
1N3455	5088A
1N3456	5090A
1N3457	5092A
1N3458	150A
1N3459	5096A
1N3460	5097A
1N3461	5100A
1N3462	5103A
1N3465	109
1N3466	109
1N3467	109
1N3468	109
1N3469	109
1N3470	109
1N3471	177
1N3473	116
1N3474	116
1N3475	116
1N3476	125
1N3482	109
1N3483	109
1N3484	109
1N3486	5801
1N3487	506
1N3491	5962
1N3491R	5963
1N3492	5962
1N3492R	5963
1N3493	5962
1N3493R	5963
1N3494	5962
1N3494R	5963
1N3495	5962
1N3495R	5963
1N3496	137A
1N3497	137A
1N3498	137A
1N3499	137A
1N3500	137A
1N3506	5005A
1N3507	5006A
1N3508	5007A
1N3509	5008A
1N3510	5009A
1N3511	135A
1N3512	5011A
1N3513	137A
1N3514	5014A
1N3514R	5995
1N3515	5015A
1N3516	5016A
1N3517	5018A
1N3518	5019A
1N3519	5020A
1N3520	5021A
1N3521	5022A
1N3522	5024A
1N3523	5025A
1N3524	5027A
1N3525	5029A
1N3526	5030A
1N3527	5031A
1N3528	5033A
1N3529	5035A
1N3530	5036A
1N3531	5085A
1N3532	5038A
1N3533	5039A
1N3534	5040A
1N3537	142A
1N3541B	5882
1N3542B	5882
1N3544	5801
1N3544B	5882
1N3545	5802
1N3545B	5806
1N3546	5803
1N3546B	5882
1N3547	5804
1N3547B	5882
1N3548	5805
1N3548B	5882
1N3549	5806
1N3550	177
1N3553	5013A
1N3554	612
1N3563	5809
1N3564	109
1N3565	5830
1N3569	5852
1N3570	5854
1N3571	5856
1N3572	5858
1N3573	5860
1N3574	5862
1N3575	177
1N3576	177
1N3577	177
1N3584	141A
1N3584A	141A
1N3584B	141A
1N3593	177
1N3594	177
1N3595	177
1N3596	177
1N3598	177
1N3599	177
1N3600	519
1N3601	177
1N3602	177
1N3603	177
1N3604	519
1N3605	519
1N3606	177
1N3607	177
1N3608	177
1N3609	177
1N3610	5896
1N3611	5802
1N3612	5804
1N3613	5806
1N3614	5809
1N3615	5892
1N3615R	5893
1N3616	5894
1N3616R	5895
1N3617	5896
1N3617R	5897
1N3618R	5897
1N3619	5899
1N3619R	5900
1N3620	5900
1N3620R	5901
1N3621	5902
1N3621R	5903
1N3622	5904
1N3622R	5905
1N3623	5908
1N3623R	5909
1N3624	5910
1N3624R	5911
1N3625	177
1N3629	116
1N3630	116
1N3631	116
1N3632	116
1N3633	116
1N3634	116
1N3635	125
1N3636	125
1N3637	125
1N3638	125
1N3639	117
1N3640	117
1N3641	117
1N3642	5808
1N3649	5866
1N3649(REV.POL.)	5867
1N3649R	5868
1N3650	5868
1N3653	177
1N3654	177
1N3656	5802
1N3657	5804
1N3658	5806
1N3659	5962
1N3659R	5963
1N3660	5962
1N3660R	5963
1N3661	5962
1N3661R	5963
1N3662	5962
1N3662R	5963
1N3663	5962
1N3663R	5963
1N3666	177
1N3668	177
1N3669	116
1N3670	5886
1N3670A	5886
1N3670R	5887
1N3671	5886
1N3671A	5886
1N3671AR	5887
1N3671R	5887
1N3672	5890
1N3672A	5890
1N3672AR	5891
1N3672R	5891
1N3672RA	5891
1N3673	5890
1N3673A	5890
1N3673AR	5891
1N3673R	5891
1N3675	5071A
1N3675A	5071A
1N3676	138A
1N3676A	138A
1N3677	5072A
1N3677A	5072A
1N3677B	5072A
1N3678	139A
1N3678A	139A
1N3679	140A
1N3679A	140A
1N3680	5074A
1N3680A	5074A
1N3681	142A
1N3681A	142A
1N3681B	142A
1N3682	143A
1N3682A	143A
1N3682B	143A
1N3683	145A
1N3683A	145A
1N3683B	145A
1N3684	5075A
1N3684A	5075A
1N3685	5077A
1N3685A	5077A
1N3685B	5077A
1N3686	5079A
1N3686A	5079A
1N3687	5080A
1N3687A	5080A
1N3688	5081A
1N3688A	5081A
1N3689	146A
1N3689A	146A
1N3689B	146A
1N3690	5084A
1N3690A	5084A
1N3690B	5084A
1N3691	147A
1N3691A	147A
1N3691B	147A
1N3692	5085A
1N3692A	5085A
1N3693	5086A
1N3693A	5086A
1N3694	5087A
1N3694A	5087A
1N3695	5088A
1N3695A	5088A
1N3696	5089A
1N3696A	5089A
1N3696B	5089A
1N3697	5090A
1N3697A	5090A
1N3698	149A
1N3698A	149A
1N3698B	149A
1N3699	5092A
1N3699A	5092A
1N3700	5093A
1N3700A	5093A
1N3701	150A
1N3701A	150A
1N3701B	150A
1N3702	5095A
1N3702A	5095A
1N3703	5096A
1N3703A	5096A
1N3704	151A
1N3704A	151A
1N3704B	151A
1N3705	5097A
1N3705A	5097A
1N3706	5098A
1N3706A	5098A
1N3707	5100A
1N3707A	5100A
1N3708	5101A
1N3708A	5101A
1N3709	5103A
1N3709A	5103A
1N3710	5105A
1N3710A	5105A
1N3722	177
1N3723	5809
1N3724	506
1N3725	506
1N3726	525
1N3727	525
1N3729	506
1N3731	519
1N3732	135A
1N3735	6354
1N3735R	6355
1N3736	6354
1N3736R	6355
1N3737	6354
1N3737R	6355
1N3738	6354
1N3738R	6355
1N3739	6356
1N3739R	6357
1N3740	6356
1N3740R	6357
1N3741	6358
1N3741R	6359
1N3742	6358
1N3742R	6359
1N3748	5802
1N3749	5804
1N3750	5806
1N3751	5808
1N3752	5809
1N3753	109
1N3754	5801
1N3755	5802
1N3756	5804
1N3757	5802
1N3758	5804
1N3759	5806
1N3760	5808
1N3761	5809
1N3763	5135A
1N3765	5998
1N3765R	5999
1N3766	5998
1N3766R	5999
1N3767	6002
1N3767R	6003
1N3768	6002
1N3768R	6003
1N3773	109
1N3776	140A
1N3777	5998
1N3782	141A
1N3782A	141A
1N3782B	141A
1N3784	141A
1N3784A	141A
1N3784B	141A
1N3785	5120A
1N3785A	5120A
1N3785B	5120A
1N3786	5121A
1N3786A	5121A
1N3786B	5121A
1N3787	5122A
1N3787A	5122A
1N3787B	5122A
1N3788	5124A
1N3788A	5124A
1N3788B	5124A
1N3789	5125A
1N3789A	5125A
1N3789B	5125A
1N3790	5126A
1N3790A	5126A
1N3790B	5126A
1N3791	5127A
1N3791A	5127A
1N3791B	5127A
1N3792	5128A
1N3792A	5128A
1N3792B	5128A
1N3793	5130A
1N3793A	5130A
1N3793B	5131A
1N3794	5131A
1N3794A	5131A
1N3794B	5131A
1N3795	5133A
1N3795A	5133A
1N3795B	5133A
1N3796	5135A
1N3796A	5135A
1N3796B	5135A
1N3797	5136A
1N3797A	5136A
1N3797B	5136A
1N3798	5137A
1N3798A	5137A
1N3798B	5137A
1N3799	5139A
1N3799A	5139A
1N3799B	5139A
1N3800	5141A
1N3800A	5141A
1N3800B	5141A
1N3801	5142A
1N3801A	5142A
1N3801B	5142A
1N3802	5143A
1N3802A	5143A
1N3802B	5143A
1N3803	5144A
1N3803A	5144A
1N3803B	5144A
1N3804	5145A
1N3804A	5145A
1N3804B	5145A
1N3805	5146A
1N3805A	5146A
1N3805B	5146A
1N3806	5147A
1N3806A	5147A
1N3806B	5147A
1N3807	5148A
1N3807A	5148A
1N3807B	5148A
1N3808	5150A
1N3808A	5150A
1N3808B	5150A
1N3809	5151A
1N3809A	5151A
1N3809B	5151A
1N3810	5152A
1N3810A	5152A
1N3810B	5152A
1N3811	5153A
1N3811A	5153A
1N3811B	5153A
1N3812	5155A
1N3812A	5155A
1N3812B	5155A
1N3813	5156A
1N3813A	5156A
1N3813B	5156A
1N3814	5157A
1N3814A	5157A
1N3814B	5157A
1N3815	5158A
1N3815A	5158A
1N3815B	5158A
1N3816	5159A
1N3816A	5159A
1N3816B	5159A
1N3817	5161A
1N3817A	5161A
1N3817B	5161A
1N3818	5162A
1N3818A	5162A
1N3818B	5162A
1N3819	5164A
1N3819A	5164A
1N3819B	5164A
1N3820	5166A
1N3820A	5166A
1N3820B	5166A
1N3821	5066A
1N3821A	5066A
1N3822	134A
1N3822A	134A
1N3823	5067A
1N3823A	5067A
1N3824	5068A
1N3824A	5068A
1N3825	5069A
1N3825A	5069A
1N3826	135A
1N3826A	135A
1N3827	136A
1N3827A	136A
1N3828	137A
1N3828A	137A
1N3829	5071A
1N3829A	5071A
1N3830	138A
1N3830A	138A
1N3855A	139A
1N3864	177
1N3866	5802
1N3867	5804
1N3868	5806
1N3869	5809
1N3870	525
1N3872	177
1N3873	177
1N3874	507
1N3875	116
1N3879	5818
1N3879A	5818
1N3879R	5819
1N3879RA	5819
1N3880	5818
1N3880A	5818
1N3880R	5819
1N3880RA	5819
1N3881	5818
1N3881A	5818
1N3881R	5819
1N3881RA	5819
1N3882	5820
1N3882A	5820
1N3882R	5821
1N3882RA	5821
1N3883	5820
1N3883A	5820
1N3883R	5821
1N3883RA	5821
1N3889	5818
1N3889A	5818
1N3889R	5819
1N3889RA	5819
1N3890	5818
1N3890A	5818
1N3890R	5819
1N3890RA	5819
1N3891	5818
1N3891A	5818
1N3891R	5819
1N3891RA	5819
1N3892	5820
1N3892A	5820
1N3892R	5821
1N3892RA	5821
1N3893	5820
1N3893A	5820
1N3893R	5821
1N3893RA	5821
1N3895	116
1N3899	6006
1N3899R	6007
1N3900	6006
1N3900R	6007
1N3901	6006
1N3901R	6007
1N3902	6008
1N3902R	6009
1N3903	6008
1N3903R	6009
1N3909	6006
1N3909R	6007
1N3910	6006
1N3910R	6007
1N3911	6006
1N3911R	6007
1N3912	6008
1N3912R	6009
1N3913	6008
1N3913R	6009
1N3914	507
1N3915	506
1N3919	5868
1N3924	5890
1N3929	125
1N3938	5802
1N3939	5804
1N3940	5806
1N3941	5808
1N3942	5809
1N3943	5062A
1N3949	5196A
1N3950	5135A
1N3951	5138A
1N3952	5802
1N3953	177
1N3954	177
1N3956	177
1N3957	5809
1N3958	5874
1N3959	5874
1N3960	5874
1N3961	5874
1N3964	5916
1N3965	5920
1N3966	5924
1N3966R	5925
1N3967	5928
1N3968	6026
1N3968R	6027
1N3969	6034
1N3969R	6035
1N3970	6040
1N3970R	6041
1N3971	6042
1N3971R	6043
1N3972	6154
1N3973	6154
1N3974	6156
1N3975	6158
1N3976	6354
1N3977	6354
1N3978	6356
1N3981	5802
1N3982	5804
1N3983	5806
1N3984	5178A
1N3985	5179A
1N3986	5180A
1N3987	5866
1N3987R	5867
1N3988	5866
1N3988R	5867
1N3989	5868
1N3989R	5869
1N3990	5868
1N3990R	5868
1N3991	109
1N3993	5174AK
1N3993A	5174AK
1N3993R	5174A
1N3993RA	5174A
1N3994	5175AK
1N3994A	5175AK
1N3994R	5175A
1N3994RA	5175A
1N3995	5176AK
1N3995A	5176AK
1N3995R	5176A
1N3995RA	5176A
1N3996	5177AK
1N3996A	5177AK
1N3996R	5177A
1N3996RA	5177A
1N3997	5178AK
1N3997A	5178AK
1N3997R	5178A
1N3997RA	5178A
1N3998	5180AK
1N3998A	5180AK
1N3998R	5180A
1N3998RA	5180A
1N3999	5181AK
1N3999A	5181AK
1N3999R	5181A
1N3999RA	5181A
1N4000	5182AK
1N4000A	5182AK
1N4000R	5182A
1N4000RA	5182A
1N4001	116
1N4001GP	116
1N4002	116
1N4002GP	552
1N4002ID	116
1N4002L	116
1N4002TA	552
1N4003	552
1N4003-T3	552
1N4003-Z	116
1N4003GP	116
1N4003LF	116
1N4004	116
1N4004GP	116
1N4004TA	116
1N4005	116
1N4005BP	116
1N4005GP	116
1N4006	125
1N4007	125
1N4009	177
1N4010	5013A
1N4011	125
1N4012	5886
1N4012R	5887
1N4013	5886
1N4013R	5887
1N4014	5890
1N4014R	5891
1N4015	5890
1N4015R	5891
1N4016	5183A
1N4016A	5183A
1N4017	5185A
1N4017A	5185A
1N4018	5186A

PART NUMBER	NTE REPLACEMENT
1N4018A	5186A
1N4019	5187A
1N4019A	5187A
1N4020	5188A
1N4020A	5188A
1N4021	5189A
1N4021A	5189A
1N4022	5191A
1N4022A	5191A
1N4023	5192A
1N4023A	5192A
1N4024	5194A
1N4024A	5194A
1N4025	5196A
1N4025A	5196A
1N4026	5197A
1N4026A	5197A
1N4027	5198A
1N4027A	5198A
1N4028	5200A
1N4028A	5200A
1N4028B	5200A
1N4029	5202A
1N4029A	5202A
1N4030	5203A
1N4030A	5203A
1N4031	5204A
1N4031A	5204A
1N4032	5205A
1N4032A	5205A
1N4033	5206A
1N4033A	5206A
1N4034	5208A
1N4034A	5208A
1N4035	5210A
1N4035A	5210A
1N4036	5212A
1N4036A	5212A
1N4037	5214A
1N4037A	5214A
1N4038	5215A
1N4038A	5215A
1N4039	5216A
1N4039A	5216A
1N4040	5217A
1N4040A	5217A
1N4041	5219A
1N4041A	5219A
1N4042	5220A
1N4042A	5220A
1N4043	177
1N4044	6354
1N4044R	6355
1N4045	6354
1N4045R	6355
1N4046	6354
1N4046R	6355
1N4047	6354
1N4047R	6355
1N4048	6354
1N4048R	6355
1N4049	6354
1N4049R	6355
1N4050	6354
1N4050R	6355
1N4051	6356
1N4051R	6357
1N4052	6356
1N4052R	6357
1N4053	6358
1N4053R	6359
1N4054	6358
1N4054R	6359
1N4055	6358
1N4055R	6359
1N4056	6358
1N4056R	6359
1N4057	5127A
1N4057A	5127A
1N4058	5130A
1N4058A	5130A
1N4059	5132A
1N4059A	5132A
1N4060	5134A
1N4060A	5134A
1N4061	5135A
1N4061A	5135A
1N4062	5136A
1N4062A	5136A
1N4063	5139A
1N4063A	5139A
1N4064	5141A
1N4064A	5141A
1N4065	5142A
1N4065A	5142A
1N4066	5143A
1N4066A	5143A
1N4067	5145A
1N4067A	5145A
1N4068	5146A
1N4068A	5146A
1N4069	5147A
1N4069A	5147A
1N4070	5148A
1N4070A	5148A
1N4071	5150A
1N4071A	5150A
1N4072	5151A
1N4072A	5151A
1N4073	5152A
1N4073A	5152A
1N4074	5153A
1N4074A	5153A
1N4075	5154A
1N4075A	5154A
1N4076	5155A
1N4076A	5155A
1N4077	5156A
1N4077A	5156A
1N4078	5157A
1N4078A	5157A
1N4079	5157A
1N4079A	5157A
1N4080	5158A
1N4080A	5158A
1N4081	5159A
1N4081A	5159A
1N4082	5160A
1N4082A	5160A
1N4083	5161A
1N4083A	5161A
1N4084	5164A
1N4084A	5164A
1N4085	5166A
1N4085A	5166A
1N4087	177
1N4088	109
1N4089	5804
1N4092	177
1N4093	178MP
1N4095	5019A
1N4096	5155A
1N4097	5156A
1N4098	5161A
1N4103A	139A
1N4106A	142A
1N4108A	144A
1N4108B	144A
1N4121A	147A
1N4121B	147A
1N4127A	5090A
1N4127B	5090A
1N4129A	149A
1N4129B	149A
1N4132A	150A
1N4132B	150A
1N4136	6054
1N4137	6060
1N4138	6064
1N4139	5800
1N4140	5801
1N4141	5802
1N4142	5804
1N4143	5806
1N4144	5808
1N4145	5809
1N4146	506
1N4147	177
1N4148	519
1N4148F	519
1N4148T	519
1N4148TA	519
1N4148TE	519
1N4148V	519
1N4149	519
1N4150	519
1N4150V	519
1N4151	177
1N4152	519
1N4153	519
1N4154	519
1N4155	506
1N4158	5071A
1N4158A	5071A
1N4159	138A
1N4159A	138A
1N4160	5072A
1N4160A	5072A
1N4160B	5072A
1N4161	139A
1N4161A	139A
1N4161B	139A
1N4162	140A
1N4162A	140A
1N4163	5074A
1N4163A	5074A
1N4164	142A
1N4164A	142A
1N4164B	142A
1N4165	143A
1N4165A	143A
1N4165B	143A
1N4166	145A
1N4166A	145A
1N4166B	145A
1N4167	5075A
1N4167A	5075A
1N4167B	5075A
1N4168	5077A
1N4168A	5077A
1N4168B	5077A
1N4169	5079A
1N4169A	5079A
1N4170	5080A
1N4170A	5080A
1N4171	5081A
1N4171A	5081A
1N4172	146A
1N4172A	146A
1N4172B	146A
1N4173	5084A
1N4173A	5084A
1N4173B	5084A
1N4174	147A
1N4174A	147A
1N4174B	147A
1N4175	5085A
1N4175A	5085A
1N4176	5086A
1N4176A	5086A
1N4177	5087A
1N4177A	5087A
1N4177B	5087A
1N4178	5088A
1N4178A	5088A
1N4179A	5089A
1N4179B	5089A
1N4180	5090A
1N4180A	5090A
1N4180B	5090A
1N4181	149A
1N4181A	149A
1N4181B	149A
1N4182	5092A
1N4182A	5092A
1N4182B	5092A
1N4183	5093A
1N4183A	5093A
1N4183B	5093A
1N4184	150A
1N4184A	150A
1N4184B	150A
1N4185	5095A
1N4185A	5095A
1N4185B	5095A
1N4186	5096A
1N4186A	5096A
1N4186B	5096A
1N4187	151A
1N4187A	151A
1N4187B	151A
1N4188	5097A
1N4188A	5097A
1N4189	5098A
1N4189A	5098A
1N4189B	5098A
1N4190	5100A
1N4190A	5100A
1N4191	5101A
1N4191A	5101A
1N4192	5103A
1N4192A	5103A
1N4192B	5103A
1N4193	5105A
1N4193A	5105A
1N4194	5181A
1N4194A	5181A
1N4195	5182A
1N4195A	5182A
1N4196	5183A
1N4196A	5183A
1N4197	5185A
1N4197A	5185A
1N4198	5186A
1N4198A	5186A
1N4199	5187A
1N4199A	5187A
1N4200	5188A
1N4200A	5188A
1N4201	5189A
1N4201A	5189A
1N4202	5190A
1N4202A	5190A
1N4203	5191A
1N4203A	5191A
1N4204	5192A
1N4204A	5192A
1N4205	5193A
1N4205A	5193A
1N4206	5194A
1N4206A	5194A
1N4207	5195A
1N4207A	5195A
1N4208	5196A
1N4208A	5196A
1N4209	5197A
1N4209A	5197A
1N4210	5198A
1N4210A	5198A
1N4212	5200A
1N4212A	5200A
1N4213	5200A
1N4213A	5202A
1N4214	5203A
1N4214A	5203A
1N4215	5204A
1N4215A	5204A
1N4216	5205A
1N4216A	5205A
1N4217	5206A
1N4217A	5206A
1N4218	5207A
1N4218A	5207A
1N4219	5208A
1N4219A	5208A
1N4220	5209A
1N4220A	5209A
1N4221	5210A
1N4221A	5210A
1N4222	5211A
1N4222A	5211A
1N4223	5212A
1N4223A	5212A
1N4224	5124A
1N4224A	5124A
1N4225	5215A
1N4225A	5215A
1N4226	5216A
1N4226A	5216A
1N4227	5217A
1N4227A	5217A
1N4228	5219A
1N4228A	5219A
1N4229	5220A
1N4229A	5220A
1N4230	5221A
1N4230A	5221A
1N4231	5222A
1N4231A	5222A
1N4232	5223A
1N4232A	5223A
1N4233	5224A
1N4233A	5224A
1N4234	5225A
1N4234A	5225A
1N4235	5226A
1N4235A	5226A
1N4236	5227A
1N4236A	5227A
1N4237	5229A
1N4237A	5229A
1N4238	5230A
1N4238A	5230A
1N4239	5232A
1N4239A	5232A
1N4240	5177A
1N4241	5179A
1N4242	177
1N4243	177
1N4245	116
1N4246	116
1N4247	116
1N4248	125
1N4249	125
1N4250	125
1N4251	125
1N4252	506
1N4258	5181A
1N4258A	5181A
1N4259	5182A
1N4259A	5182A
1N4260	5183A
1N4260A	5183A
1N4261	5185A
1N4261A	5185A
1N4262	5186A
1N4262A	5186A
1N4263	5187A
1N4263A	5187A
1N4264	5188A
1N4264A	5188A
1N4265	5189A
1N4265A	5189A
1N4266	5191A
1N4266A	5191A
1N4267	5192A
1N4267A	5192A
1N4268	5194A
1N4268A	5194A
1N4269	5196A
1N4269A	5196A
1N4270	5197A
1N4270A	5197A
1N4271	5198A
1N4271A	5198A
1N4272	5200A
1N4272A	5200A
1N4273	5202A
1N4273A	5202A
1N4274	5203A
1N4274A	5203A
1N4275	5204A
1N4275A	5204A
1N4276	5205A
1N4276A	5205A
1N4277	5206A
1N4277A	5206A
1N4278	5208A
1N4278A	5208A
1N4279	5210A
1N4279A	5210A
1N4280	5212A
1N4280A	5212A
1N4281	5214A
1N4281A	5214A
1N4282	5215A
1N4282A	5215A
1N4283	5216A
1N4283A	5216A
1N4284	5217A
1N4284A	5217A
1N4285	5219A
1N4285A	5219A
1N4286	5220A
1N4286A	5220A
1N4287	5222A
1N4287A	5222A
1N4288	5223A
1N4288A	5223A
1N4289	5224A
1N4289A	5224A
1N4290	5226A
1N4290A	5226A
1N4291	5227A
1N4291A	5227A
1N4292	530
1N4292A	530
1N4293	5232A
1N4293A	5232A
1N4296	140A
1N4296A	140A
1N4301	5074A
1N4301A	5074A
1N4302	5073A
1N4302A	5073A
1N4303	5074A
1N4303A	5074A
1N4303B	141A
1N4304	5074A
1N4304A	5074A
1N4304B	141A
1N4305	519
1N4305F	519
1N4306	177
1N4307	177
1N4308	177
1N4309	177
1N4311	177
1N4315	177
1N4318	177
1N4321	5089A
1N4322	177
1N4323	5071A
1N4323A	5071A
1N4324	138A
1N4324A	138A
1N4325	5072A
1N4325A	5072A
1N4325B	5072A
1N4326	139A
1N4326A	139A
1N4326B	139A
1N4327	140A
1N4327A	140A
1N4328	5074A
1N4328A	5074A
1N4329	142A
1N4329A	142A
1N4329B	142A
1N4330	143A
1N4330A	143A
1N4330B	143A
1N4331	145A
1N4331A	145A
1N4331B	145A
1N4332	5075A
1N4332A	5075A
1N4332B	5075A
1N4333	5077A
1N4333A	5077A
1N4333B	5077A
1N4334	5079A
1N4334A	5079A
1N4335	5080A
1N4335A	5080A
1N4336	5081A
1N4336A	5081A
1N4337	146A
1N4337A	146A
1N4337B	147A
1N4338	5084A
1N4338A	5084A
1N4338B	5084A
1N4339	147A
1N4339A	147A
1N4339B	147A
1N4340	5085A
1N4340A	5085A
1N4341	5086A
1N4341A	5086A
1N4342	5087A
1N4342A	5087A
1N4342B	5087A
1N4343	5088A
1N4343A	5088A
1N4344	5089A
1N4344A	5089A
1N4344B	5089A
1N4345	5090A
1N4345A	5090A
1N4345B	5090A
1N4346	149A
1N4346A	149A
1N4346B	149A
1N4347	5092A
1N4347A	5092A
1N4347B	5092A
1N4348	5093A
1N4348A	5093A
1N4348B	5093A
1N4349	150A
1N4349A	150A
1N4349B	150A
1N4350	5095A
1N4350A	5095A
1N4350B	5095A
1N4351	5096A
1N4351A	5096A
1N4351B	5096A
1N4352	151A
1N4352A	151A
1N4352B	151A
1N4353	5097A
1N4353A	5097A
1N4354	5098A
1N4354A	5098A
1N4354B	5098A
1N4355	5100A
1N4355A	5100A
1N4356	5101A
1N4356A	5101A
1N4356B	5101A
1N4357	5103A
1N4357A	5103A
1N4357B	5103A
1N4358	5105A
1N4358A	5105A
1N4360	5000A
1N4361	125
1N4363	177
1N4364	5801
1N4365	5802
1N4366	5803
1N4367	5804
1N4368	5805
1N4369	5806
1N4370	5000A
1N4370A	5000A
1N4371	5002A
1N4371A	5002A
1N4372	5004A
1N4372A	5004A
1N4375	177
1N4376	177
1N4382	177
1N4383	5802
1N4384	5804
1N4385	5806
1N4389	177
1N4392	177
1N4395	177
1N4395A	177
1N4400	5071A
1N4400A	5071A
1N4401	138A
1N4401A	138A
1N4401B	138A
1N4402	5072A
1N4402A	5072A
1N4402B	5072A
1N4403	139A
1N4403A	139A
1N4403B	139A
1N4404	140A
1N4404A	140A
1N4405	5074A
1N4405A	5074A
1N4406	142A
1N4406A	142A
1N4406B	142A
1N4407	143A
1N4407A	143A
1N4407B	143A
1N4408	145A
1N4408A	145A
1N4408B	145A
1N4409	5075A
1N4409A	5075A
1N4410	5077A
1N4410A	5077A
1N4410B	5077A
1N4411	5079A
1N4411A	5079A
1N4412	5080A
1N4412A	5080A
1N4413	5081A
1N4413A	5081A
1N4414	146A
1N4414A	146A
1N4414B	146A
1N4415	5084A
1N4415A	5084A
1N4416	147A
1N4416A	147A
1N4416B	147A
1N4417	5085A
1N4417A	5085A
1N4418	5086A
1N4418A	5086A
1N4419	5087A
1N4419A	5087A
1N4419B	5087A
1N4420	5088A
1N4420A	5088A
1N4421	5089A
1N4421A	5089A
1N4422	5090A
1N4422A	5090A
1N4422B	5090A
1N4423	149A
1N4423A	149A
1N4423B	149A
1N4424	5092A
1N4424A	5092A
1N4424B	5092A
1N4425	5093A
1N4425A	5093A
1N4425B	5093A
1N4426	150A
1N4426A	150A
1N4426B	150A
1N4427	5095A
1N4427A	5095A
1N4427B	5095A
1N4428	5096A
1N4428A	5096A
1N4428B	5096A
1N4429	151A
1N4429A	151A
1N4429B	151A
1N4430	5097A
1N4430A	5097A
1N4431	5098A
1N4431A	5098A
1N4431B	5098A
1N4432	5100A
1N4432A	5100A
1N4433	5101A
1N4433A	5101A
1N4434	5103A
1N4434A	5103A
1N4434B	5103A
1N4435	5105A
1N4435A	5105A
1N4444	177
1N4446	519
1N4447	519
1N4448	519
1N4449	519
1N4450	177
1N4451	177
1N4454	519
1N4458	5866
1N4458R	5890
1N4459	5868
1N4459R	5869
1N4460	5119A
1N4461	5120A
1N4462	5121A
1N4463	5122A
1N4464	5124A
1N4465	5125A
1N4466	5126A
1N4467	5127A
1N4468	5128A
1N4469	5130A
1N4470	5131A
1N4471	5133A
1N4472	5135A
1N4473	5136A
1N4474	5137A
1N4475	5139A
1N4476	5141A
1N4477	5142A
1N4478	5143A
1N4479	5144A
1N4480	5145A
1N4481	5146A
1N4482	5147A
1N4483	5148A
1N4484	5150A
1N4485	5151A
1N4486	5152A
1N4487	5153A
1N4488	5155A
1N4489	5156A
1N4490	5157A
1N4491	5158A
1N4492	5159A
1N4493	5161A
1N4494	5162A
1N4495	5164A
1N4496	5166A
1N4499	137A
1N4500	5806
1N4501	5014A
1N4502	109
1N4503	5142A
1N4504	5166A
1N4506	5874
1N4507	5878
1N4508	5882
1N4509	5886
1N4510	5890
1N4517	5802
1N4523	109
1N4525	5986
1N4526	5990
1N4527	5994
1N4528	5998
1N4529	6002
1N4531	177
1N4532	177
1N4533	519
1N4534	519
1N4535	5066A
1N4536	519
1N4547	177
1N4548	177
1N4549	5240A
1N4549A	5240A
1N4549B	5240A
1N4549RA	5240AK
1N4549RB	5240AK
1N4550	5241A
1N4550A	5241A
1N4550B	5241A
1N4550R	5241AK
1N4550RA	5241AK
1N4550RB	5241AK
1N4551	5242A
1N4551A	5242A
1N4551B	5242A
1N4551R	5242AK
1N4551RA	5242AK
1N4551RB	5242AK
1N4552	5243A
1N4552A	5243A
1N4552B	5243A
1N4552R	5243AK
1N4552RA	5243AK
1N4552RB	5243AK
1N4553	5244A
1N4553A	5244A
1N4553B	5244A
1N4553R	5244AK
1N4553RA	5244AK
1N4553RB	5244AK
1N4554	5246A
1N4554A	5246A
1N4554B	5246A
1N4554R	5246AK
1N4554RA	5246AK
1N4554RB	5246AK
1N4555	5247A
1N4555A	5247A
1N4555AR	5247AK
1N4555B	5247A

PART NUMBER	NTE REPLACEMENT
1N4555R	5247AK
1N4555RA	5247AK
1N4555RB	5247AK
1N4556	5248A
1N4556A	5248A
1N4556B	5248A
1N4556R	5248AK
1N4556RA	5248AK
1N4556RB	5248AK
1N4558B	5247A
1N4586	5808
1N4587	6154
1N4587R	6155
1N4588	6154
1N4588R	6155
1N4589	6154
1N4589R	6155
1N4590	6154
1N4590R	6155
1N4591	6156
1N4591R	6157
1N4592	6156
1N4592R	6157
1N4593	6158
1N4593R	6159
1N4595	6162
1N4595R	6163
1N4596	6162
1N4596R	6163
1N4606	177
1N4606R	177
1N4609	613
1N4609A	613
1N4610	177
1N4611	5071A
1N4612	5071A
1N4612A	5071A
1N4612B	5071A
1N4612C	5071A
1N4613	5071A
1N4617	5000A
1N4618	5002A
1N4619	5004A
1N4620	5005A
1N4621	5006A
1N4622	5007A
1N4623	5008A
1N4624	5009A
1N4625	5010A
1N4626	5011A
1N4627	5013A
1N4628	5071A
1N4629	138A
1N4630	5072A
1N4631	139A
1N4632	140A
1N4633	5074A
1N4634	142A
1N4635	143A
1N4636	145A
1N4637	5075A
1N4638	5077A
1N4639	5079A
1N4640	5080A
1N4641	5081A
1N4642	146A
1N4643	5084A
1N4644	147A
1N4645	5085A
1N4646	5086A
1N4647	5087A
1N4648	5088A
1N4649	5066A
1N4650	134A
1N4651	5067A
1N4652	5068A
1N4653	5069A
1N4654	135A
1N4655	136A
1N4656	137A
1N4657	5071A
1N4658	138A
1N4659	5072A
1N4660	139A
1N4661	140A
1N4662	5074A
1N4663	142A
1N4664	143A
1N4665	145A
1N4666	5075A
1N4667	5077A
1N4668	5079A
1N4669	5080A
1N4670	5081A
1N4671	146A
1N4672	5084A
1N4673	147A
1N4674	5085A
1N4675	5086A
1N4676	5087A
1N4677	5088A
1N4681	5000A
1N4682	5002A
1N4683	5004A
1N4684	5005A
1N4685	5006A
1N4686	5007A
1N4687	5008A
1N4688	5009A
1N4689	5010A
1N4690	5011A
1N4691	5013A
1N4692	5014A
1N4693	5015A
1N4694	5016A
1N4695	5017A
1N4696	5018A
1N4697	5019A
1N4698	5020A
1N4699	5021A
1N4700	5022A
1N4701	5023A
1N4702	5024A
1N4703	5025A
1N4704	5026A
1N4705	5027A
1N4706	5028A
1N4707	5029A
1N4708	5030A
1N4709	5031A
1N4710	5032A
1N4711	5033A
1N4712	5034A
1N4713	5035A
1N4714	5036A
1N4715	5037A
1N4716	5038A
1N4717	5039A
1N4718	507
1N4719	5800
1N4719R	156
1N4720	5801
1N4720R	156
1N4721	5802
1N4721R	5802
1N4722	5804
1N4722R	156
1N4723	5806
1N4723R	156
1N4724	5808
1N4724R	156
1N4725	5809
1N4725R	156
1N4726	177
1N4727	177
1N4728	5066A
1N4728A	5066A
1N4728AG	5066A
1N4729	134A
1N4729A	134A
1N4730	5067A
1N4730A	5067A
1N4730AG	5067A
1N4731	5068A
1N4731A	5068A
1N4732	5069A
1N4732A	5069A
1N4733	135A
1N4733A	135A
1N4734	136A
1N4734A	136A
1N4735	137A
1N4735A	137A
1N4736	5071A
1N4736A	5071A
1N4737	138A
1N4737A	138A
1N4738	5072A
1N4738A	138A
1N4739	139A
1N4739A	139A
1N4740	140A
1N4740A	140A
1N4741	5074A
1N4741A	5074A
1N4742	142A
1N4742A	142A
1N4743	143A
1N4743A	143A
1N4744	145A
1N4744A	145A
1N4745	5075A
1N4745(A)	5075A
1N4745A	5075A
1N4746	5077A
1N4746A	5077A
1N4747	5135A
1N4747A	5079A
1N4748	5080A
1N4748A	5080A
1N4749	5081A
1N4749A	5081A
1N4750	146A
1N4750A	146A
1N4751	5084A
1N4751A	5084A
1N4752	147A
1N4752A	147A
1N4753	5085A
1N4753A	5085A
1N4754	5086A
1N4754A	5086A
1N4755	5087A
1N4755A	5087A
1N4755AE	5087A
1N4755AG	5087A
1N4756	5088A
1N4756A	5088A
1N4756AE	5088A
1N4756AG	5088A
1N4757	5089A
1N4757A	5089A
1N4757AE	5089A
1N4757AG	5089A
1N4758	5090A
1N4758A	5090A
1N4758AG	5090A
1N4758E	5090A
1N4759	149A
1N4759A	149A
1N4760	5092A
1N4760A	5092A
1N4760AE	5092A
1N4760AG	5092A
1N4761	5093A
1N4761A	5093A
1N4762	150A
1N4762A	150A
1N4763	5095A
1N4763A	5095A
1N4763AE	5095A
1N4763AG	5095A
1N4764	5096A
1N4764A	5096A
1N4786	610
1N4786A	610
1N4788A	611
1N4789	612
1N4789A	612
1N4792	613
1N4792A	613
1N4794	614
1N4794A	614
1N4801	610
1N4801A	610
1N4816	5800
1N4817	125
1N4818	125
1N4819	5803
1N4820	5804
1N4821	5805
1N4822	5806
1N4823	552
1N4824	552
1N4825	552
1N4826	506
1N4827	177
1N4831	139A
1N4831A	139A
1N4831B	5124A
1N4832	5125A
1N4832A	140A
1N4833	5074A
1N4833A	5074A
1N4834	142A
1N4834A	142A
1N4835	143A
1N4835A	143A
1N4836	145A
1N4836A	145A
1N4837	5075A
1N4837A	5075A
1N4838	5077A
1N4838A	5077A
1N4839	5079A
1N4839A	5079A
1N4840	5080A
1N4840A	5136A
1N4841	5081A
1N4841A	5081A
1N4842	146A
1N4842A	146A
1N4842B	146A
1N4843	5084A
1N4843A	5084A
1N4844	147A
1N4844A	147A
1N4844B	147A
1N4845	5085A
1N4845A	5085A
1N4846	5086A
1N4846A	5086A
1N4847	5087A
1N4847A	5087A
1N4848	5088A
1N4848A	5088A
1N4849	5089A
1N4849A	5089A
1N4850	5090A
1N4850A	5090A
1N4851	149A
1N4851A	149A
1N4851B	5150A
1N4852	5092A
1N4852A	5092A
1N4853	5093A
1N4853A	5093A
1N4854	150A
1N4854A	150A
1N4854B	150A
1N4855	5095A
1N4855A	5095A
1N4856	5096A
1N4856A	5096A
1N4857	151A
1N4857A	151A
1N4857B	151A
1N4858	5097A
1N4858A	5097A
1N4859	5098A
1N4859A	5098A
1N4860	5100A
1N4860A	5100A
1N4861	177
1N4862	177
1N4863	177
1N4864	177
1N4878	6154
1N4879	6354
1N4880	6354
1N4881	5135A
1N4882	5143A
1N4883	5127A
1N4884	5135A
1N4889	5150A
1N4896	142A
1N4896A	142A
1N4897	143A
1N4897A	143A
1N4898	143A
1N4898A	143A
1N4899	143A
1N4899A	143A
1N4900	143A
1N4900A	143A
1N4901	143A
1N4901A	143A
1N4902	143A
1N4902A	143A
1N4903	143A
1N4903A	143A
1N4904	143A
1N4904A	143A
1N4905	143A
1N4905A	143A
1N4906	143A
1N4906A	143A
1N4907	143A
1N4907A	143A
1N4908	143A
1N4908A	143A
1N4909	143A
1N4909A	143A
1N4910	143A
1N4910A	143A
1N4911	143A
1N4911A	143A
1N4912	143A
1N4912A	143A
1N4913	143A
1N4913A	143A
1N4914	143A
1N4914A	143A
1N4915	143A
1N4915A	143A
1N4916	5078A
1N4916A	5078A
1N4917	5078A
1N4917A	5078A
1N4918	5078A
1N4918A	5078A
1N4919	5078A
1N4919A	5078A
1N4920	5078A
1N4920A	5078A
1N4921	5078A
1N4921A	5078A
1N4922	5078A
1N4922A	5078A
1N4923	5078A
1N4923A	5078A
1N4924	5078A
1N4924A	5078A
1N4926	5078A
1N4926A	5078A
1N4927	5078A
1N4927A	5078A
1N4928	5078A
1N4928A	5078A
1N4929	5078A
1N4929A	5078A
1N4930	5078A
1N4930A	5078A
1N4931	5078A
1N4931A	5078A
1N4932	5078A
1N4932A	5078A
1N4933	552
1N4934	552
1N4935	552
1N4936	552
1N4937	552
1N4938	177
1N4942	156
1N4943	156
1N4944	156
1N4945	506
1N4946	506
1N4947	558
1N4948	506
1N4949	177
1N4950	177
1N4951	178MP
1N4952	178MP
1N4954	5120A
1N4955	5121A
1N4956	5122A
1N4957	5124A
1N4958	5125A
1N4959	5126A
1N4960	5127A
1N4960D	5127A
1N4961	5128A
1N4962	5130A
1N4963	5131A
1N4964	5133A
1N4965	5135A
1N4966	5136A
1N4967	5137A
1N4968	5139A
1N4969	5141A
1N4970	5142A
1N4971	5143A
1N4972	5144A
1N4973	5145A
1N4974	5145A
1N4975	5147A
1N4976	5148A
1N4977	5150A
1N4978	5151A
1N4979	5152A
1N4980	5153A
1N4981	5155A
1N4982	5156A
1N4983	5157A
1N4984	5158A
1N4985	5159A
1N4986	5161A
1N4987	5162A
1N4988	5164A
1N4989	5166A
1N4997	5800
1N4997R	156
1N4998	5801
1N4998R	156
1N4999	5802
1N4999R	156
1N5000	5804
1N5000R	156
1N5001	5806
1N5001R	156
1N5002	5808
1N5002R	156
1N5003	5809
1N5003R	156
1N5004	5801
1N5005	5802
1N5006	5804
1N5007	5806
1N5008	5111A
1N5008A	5111A
1N5009	5112A
1N5009A	5112A
1N5010	5113A
1N5010A	5113A
1N5011	5114A
1N5012	5115A
1N5012A	5115A
1N5013	5116A
1N5013A	5116A
1N5014	5117A
1N5015	5119A
1N5016	5120A
1N5017	5121A
1N5018	5122A
1N5019	5124A
1N5019A	5124A
1N5020	5125A
1N5021	5126A
1N5022	5127A
1N5023	5128A
1N5024	5129A
1N5025	5130A
1N5026	5131A
1N5027	5132A
1N5028	5133A
1N5028A	5133A
1N5029	5134A
1N5030	5135A
1N5031	5136A
1N5032	5137A
1N5033	5138A
1N5034	5139A
1N5035	5141A
1N5036	5142A
1N5037	5143A
1N5038	5144A
1N5039	5145A
1N5040	5146A
1N5040A	5146A
1N5041	5146A
1N5042	5147A
1N5042A	5147A
1N5043	5147A
1N5044	5147A
1N5044A	5147A
1N5045	5148A
1N5046	5150A
1N5047	5151A
1N5048	5152A
1N5049	5153A
1N5049A	5153A
1N5050	5155A
1N5051	5156A
1N5052	5808
1N5053	5808
1N5054	125
1N5054A	125
1N5055	5801
1N5056	5802
1N5057	5803
1N5058	5804
1N5059	125
1N5060	125
1N5061	125
1N5062	125
1N5062(SEARS)	177
1N5063	5120A
1N5064	5121A
1N5065	5122A
1N5066	5124A
1N5067	5125A
1N5068	5126A
1N5069	5128A
1N5070	5129A
1N5071	5130A
1N5072	5131A
1N5073	5133A
1N5074	5136A
1N5075	5137A
1N5076	5139A
1N5077	5141A
1N5078	5142A
1N5079	5143A
1N5080	5144A
1N5081	5144A
1N5082	5145A
1N5083	5146A
1N5084	5146A
1N5085	5147A
1N5086	5147A
1N5087	5148A
1N5088	5149A
1N5089	5150A
1N5090	5151A
1N5092	5152A
1N5093	5153A
1N5094	5153A
1N5095	5155A
1N5096	5157A
1N5097	5158A
1N5098	5159A
1N5099	5160A
1N5100	5162A
1N5101	5163A
1N5102	5164A
1N5103	5165A
1N5104	5166A
1N5118	5129A
1N5119	5144A
1N5120	5146A
1N5121	5147A
1N5122	5149A
1N5123	5151A
1N5124	5153A
1N5125	5155A
1N5126	5160A
1N5127	5163A
1N5128	5165A
1N5129	5159A
1N5131	5162A
1N5132	5163A
1N5133	5165A
1N5134	5166A
1N5139	610
1N5139A	610
1N5140	611
1N5140A	611
1N5141	612
1N5141A	612
1N5142	612
1N5142A	612
1N5143	613
1N5143A	613
1N5144	613
1N5144A	613
1N5145	613
1N5145A	613
1N5146	614
1N5146A	614
1N5147	614
1N5147A	614
1N5148	614
1N5148A	614
1N5154B	146A
1N5170	156
1N5171	5800
1N5172	156
1N5173	5803
1N5174	5804
1N5175	5805
1N5176	5806
1N5177	156
1N5178	156
1N5180	5812
1N5185	580
1N5185GP	5806
1N5186	580
1N5186GP	5806
1N5187	580
1N5187GP	5806
1N5188	580
1N5188A	5806
1N5188GP	5806
1N5189	580
1N5189GP	5806
1N5190	580
1N5190GP	156
1N5194	177
1N5195	177
1N5196	177
1N5197	5800
1N5198	117
1N5199	5802
1N5200	5804
1N5201	5806
1N5206	5806
1N5207	5815
1N5208	177
1N5209	177
1N5210	177
1N5211	116
1N5212	116
1N5213	116
1N5214	125
1N5215	116
1N5216	116
1N5217	116
1N5218	125
1N5219	177
1N5220	177
1N5221	5000A
1N5221A	5000A
1N5221B	5000A
1N5222	5001A
1N5222A	5001A
1N5222B	5001A
1N5223	5002A
1N5223A	5002A
1N5223B	5002A
1N5224	5003A
1N5224A	5003A
1N5224B	5003A
1N5225	5004A
1N5225A	5004A
1N5225B	5004A
1N5226	5005A
1N5226A	5005A
1N5226B	5005A
1N5226C	5005A
1N5227	5006A
1N5227A	5006A
1N5227B	134A
1N5228	5007A
1N5228A	5007A
1N5228B	5007A
1N5229	5008A
1N5229A	5008A
1N5229B	5068A
1N5230	5009A
1N5230A	5009A
1N5230B	5009A
1N5231	5010A
1N5231A	5010A
1N5231B	5010A
1N5232	5011A
1N5232A	5011A
1N5232B	5011A
1N5233	5012A
1N5233A	5012A
1N5233B	5012A
1N5234	5013A
1N5234A	5013A
1N5234B	5003A
1N5235	5014A
1N5235A	5014A
1N5235B	5014A
1N5236	5015A
1N5236A	5015A
1N5236B	5015A
1N5237	5016A
1N5237A	5016A
1N5237B	5072A
1N5238	5073A
1N5238A	5017A
1N5238B	5073A
1N5239	5018A
1N5239A	5018A
1N5239B	5018A
1N5240	5019A
1N5240A	5019A
1N5240B	5019A
1N5241	5020A
1N5241A	5020A
1N5241B	5074A
1N5242	5021A
1N5242A	5021A
1N5242B	5021A
1N5243	5022A
1N5243A	5022A
1N5243B	5022A
1N5244	5023A
1N5244A	5023A
1N5244B	5023A
1N5245	5024A
1N5245A	5024A
1N5245B	5024A
1N5246	5025A
1N5246A	5025A
1N5246B	5075A
1N5247	5026A
1N5247A	5026A
1N5247B	5026A
1N5248	5027A
1N5248A	5027A
1N5248B	5077A
1N5249	5028A
1N5249A	5028A
1N5249B	5078A
1N5250	5029A
1N5250A	5029A
1N5250B	5079A
1N5251	5030A
1N5251A	5030A
1N5251B	5080A
1N5252	5031A
1N5252A	5031A
1N5252B	5081A
1N5253	5032A
1N5253A	5032A
1N5253B	5082A
1N5254	5033A
1N5254A	5033A
1N5254B	5033A
1N5255	5034A
1N5255A	5034A
1N5255B	5034A
1N5256	5035A
1N5256A	5035A
1N5256B	5084A
1N5257	5036A
1N5257A	5036A
1N5257B	5036A
1N5258	5037A
1N5258A	5037A
1N5258B	5037A
1N5259	5038A
1N5259A	5038A

PART NUMBER	NTE REPLACEMENT
1N5259B	5086A
1N5260	5039A
1N5260A	5039A
1N5260B	5087A
1N5261	5040A
1N5261A	5040A
1N5261B	5040A
1N5262	5041A
1N5262A	5041A
1N5262B	5089A
1N5263	5042A
1N5263A	5042A
1N5263B	5042A
1N5264	5043A
1N5264A	5043A
1N5264B	5043A
1N5265	5044A
1N5265A	5044A
1N5265B	5044A
1N5266	5045A
1N5266A	5045A
1N5266B	5045A
1N5267	5046A
1N5267A	5046A
1N5267B	5093A
1N5268	5047A
1N5268A	5047A
1N5268B	5047A
1N5269	5048A
1N5269A	5048A
1N5269B	5048A
1N5270	5049A
1N5270A	5049A
1N5270B	5049A
1N5271	5050A
1N5271A	5050A
1N5271B	5050A
1N5272	5051A
1N5272A	5051A
1N5272B	5051A
1N5273	5052A
1N5273A	5052A
1N5273B	5052A
1N5273BE	5052A
1N5274	5053A
1N5274A	5053A
1N5274B	5098A
1N5275	5054A
1N5275A	5054A
1N5275B	5054A
1N5276	5055A
1N5276A	5055A
1N5276B	5055A
1N5277	5056A
1N5277A	5056A
1N5277B	5056A
1N5278	5057A
1N5278A	5057A
1N5278B	5057A
1N5279	5058A
1N5279A	5058A
1N5279B	5058A
1N5280	5059A
1N5280A	5059A
1N5280B	5059A
1N5281	5060A
1N5281A	5060A
1N5281B	5060A
1N5282	177
1N5315	177
1N5316	177
1N5317	177
1N5318	177
1N5319	519
1N5320	177
1N5324	5013A
1N5324A	5013A
1N5324B	5011A
1N5326	5812
1N5330	5116A
1N5333	5111A
1N5333A	5111A
1N5333B	5111A
1N5333BE	5111A
1N5334	5112A
1N5334A	5112A
1N5334B	5112A
1N5334BE	5112A
1N5335	5113A
1N5335A	5113A
1N5335B	5113A
1N5335BE	5113A
1N5336	5114A
1N5336A	5114A
1N5336B	5114A
1N5336BE	5114A
1N5337	5115A
1N5337A	5115A
1N5337B	5115A
1N5337BE	5115A
1N5338	5116A
1N5338A	5116A
1N5338B	5116A
1N5338BE	5116A
1N5339	5117A
1N5339A	5117A
1N5339B	5117A
1N5339BE	5117A
1N5340	5118A
1N5340A	5118A
1N5340B	5118A
1N5340BE	5118A
1N5341	5119A
1N5341A	5119A
1N5341B	5119A
1N5341BE	5119A
1N5342	5120A
1N5342A	5120A
1N5342B	5120A
1N5342BE	5120A
1N5343	5121A
1N5343A	5121A
1N5343B	5121A
1N5343BE	5121A
1N5344	5122A
1N5344A	5122A
1N5344B	5122A
1N5344BE	5122A
1N5345	5123A
1N5345A	5123A
1N5345B	5123A
1N5345BE	5123A
1N5346	5124A
1N5346A	5124A
1N5346B	5124A
1N5346BE	5124A
1N5347	5125A
1N5347A	5125A
1N5347B	5125A
1N5347BE	5125A
1N5348	5126A
1N5348A	5126A
1N5348B	5126A
1N5348BE	5126A
1N5349	5127A
1N5349A	5127A
1N5349B	5127A
1N5349BE	5127A
1N5350	5128A
1N5350A	5128A
1N5350B	5128A
1N5350BE	5128A
1N5351	5129A
1N5351A	5129A
1N5351B	5129A
1N5351BE	5129A
1N5352	5130A
1N5352A	5130A
1N5352B	5130A
1N5352BE	5130A
1N5353	5131A
1N5353A	5131A
1N5353B	5131A
1N5353BE	5131A
1N5354	5132A
1N5354A	5132A
1N5354B	5132A
1N5354BE	5132A
1N5355	5133A
1N5355A	5133A
1N5355B	5133A
1N5355BE	5133A
1N5356	5134A
1N5356A	5134A
1N5356B	5134A
1N5356BE	5134A
1N5357	5135A
1N5357A	5135A
1N5357B	5135A
1N5357BE	5135A
1N5358	5136A
1N5358A	5136A
1N5358B	5136A
1N5358BE	5136A
1N5359	5137A
1N5359A	5137A
1N5359B	5137A
1N5359BE	5137A
1N5360	5138A
1N5360A	5138A
1N5360B	5138A
1N5360BE	5138A
1N5361	5139A
1N5361A	5139A
1N5361B	5139A
1N5361BE	5139A
1N5362	5140A
1N5362A	5140A
1N5362B	5140A
1N5362BE	5140A
1N5363	5141A
1N5363A	5141A
1N5363B	5141A
1N5363BE	5141A
1N5364	5142A
1N5364A	5142A
1N5364B	5142A
1N5365	5143A
1N5365A	5143A
1N5365B	5143A
1N5365BE	5143A
1N5366	5144A
1N5366A	5144A
1N5366B	5144A
1N5366BE	5144A
1N5367	5145A
1N5367A	5145A
1N5367B	5145A
1N5367BE	5145A
1N5368	5146A
1N5368A	5146A
1N5368B	5146A
1N5368BE	5146A
1N5369	5147A
1N5369A	5147A
1N5369B	5147A
1N5369BE	5147A
1N5370	5148A
1N5370A	5148A
1N5370B	5148A
1N5370BE	5148A
1N5371	5149A
1N5371A	5149A
1N5371B	5149A
1N5371BE	5149A
1N5372	5150A
1N5372A	5150A
1N5372B	5150A
1N5373	5151A
1N5373A	5151A
1N5373B	5151A
1N5373BE	5151A
1N5374	5152A
1N5374A	5152A
1N5374B	5152A
1N5374BE	5151A
1N5375	5153A
1N5375A	5153A
1N5375B	5153A
1N5375BE	5153A
1N5376	5154A
1N5376A	5154A
1N5376B	5154A
1N5376BE	5154A
1N5377	5155A
1N5377A	5155A
1N5377B	5155A
1N5377BE	5155A
1N5378	5156A
1N5378A	5156A
1N5378B	5156A
1N5378BE	5156A
1N5379	5157A
1N5379A	5157A
1N5379B	5157A
1N5379BE	5157A
1N5380	5158A
1N5380A	5158A
1N5380B	5158A
1N5380BE	5158A
1N5381	5159A
1N5381A	5159A
1N5381B	5159A
1N5381BE	5159A
1N5382	5160A
1N5382A	5160A
1N5382B	5160A
1N5382BE	5160A
1N5383	5161A
1N5383A	5161A
1N5383B	5161A
1N5383BE	5161A
1N5384	5162A
1N5384A	5162A
1N5384B	5162A
1N5384BE	5162A
1N5385	5163A
1N5385A	5163A
1N5385B	5163A
1N5386	5164A
1N5386A	5164A
1N5386B	5164A
1N5386BE	5164A
1N5387	5165A
1N5387A	5165A
1N5387B	5165A
1N5388	5166A
1N5388A	5166A
1N5388B	5166A
1N5388BE	5166A
1N5391	580
1N5392	580
1N5392G2	5801
1N5392GP	5801
1N5393	580
1N5393GP	125
1N5394	580
1N5394GP	125
1N5395	580
1N5395GP	125
1N5396	580
1N5396GP	125
1N5397	580
1N5397GP	125
1N5398	156
1N5398GP	125
1N5399	156
1N5399GP	125
1N5400	5800
1N5401	5801
1N5402	5802
1N5403	5803
1N5404	5804
1N5404G	5804
1N5405	5805
1N5406	5806
1N5407	5808
1N5408	5809
1N5409	5988
1N5409R	5989
1N5410	5876
1N5410R	5877
1N5411	6407
1N5412	117
1N5413	177
1N5414	177
1N5415	580
1N5416	580
1N5417	580
1N5418	580
1N5419	580
1N5420	580
1N5426	177
1N5433	506
1N5434	506
1N5435	5886
1N5441A	610
1N5441B	610
1N5441C	610
1N5443A	611
1N5443B	611
1N5443C	611
1N5444A	612
1N5444B	612
1N5444C	612
1N5445A	612
1N5447	613
1N5448A	613
1N5448B	613
1N5448C	613
1N5450A	614
1N5450B	614
1N5450C	614
1N5461A	610
1N5461B	610
1N5461C	610
1N5463A	611
1N5463B	611
1N5463C	611
1N5464A	612
1N5464B	612
1N5464C	612
1N5468A	613
1N5468B	613
1N5468C	613
1N5470A	614
1N5470B	614
1N5470C	614
1N5518	5005A
1N5518A	5005A
1N5518B	5005A
1N5519	5006A
1N5519A	5006A
1N5519B	5006A
1N5520	5007A
1N5520A	5007A
1N5520B	5007A
1N5520C	5007A
1N5520D	5007A
1N5521	5008A
1N5521A	5008A
1N5521B	5008A
1N5522	5009A
1N5522A	5009A
1N5522B	5009A
1N5523	5010A
1N5523A	5010A
1N5523B	5010A
1N5524	5011A
1N5524A	5011A
1N5524B	5011A
1N5525	5013A
1N5525A	5013A
1N5525B	5013A
1N5526	5014A
1N5526A	5014A
1N5526B	5014A
1N5527	5015A
1N5527A	5015A
1N5527B	5015A
1N5528	5016A
1N5528A	5016A
1N5528B	5016A
1N5529	5018A
1N5529A	5018A
1N5529B	5018A
1N5530	5019A
1N5530A	5019A
1N5530B	5019A
1N5531	5020A
1N5531A	5020A
1N5531B	5020A
1N5532	5021A
1N5532A	5021A
1N5532B	5021A
1N5533	5022A
1N5533A	5022A
1N5533B	5022A
1N5534	5023A
1N5534A	5023A
1N5534B	5023A
1N5535	5024A
1N5535A	5024A
1N5535B	5024A
1N5536	5025A
1N5536A	5025A
1N5536B	5025A
1N5537	5026A
1N5537A	5026A
1N5537B	5026A
1N5538	5027A
1N5538A	5027A
1N5538B	5027A
1N5539	5028A
1N5539A	5028A
1N5539B	5028A
1N5540	5029A
1N5540A	5029A
1N5540B	5029A
1N5541	5030A
1N5541A	5030A
1N5541B	5030A
1N5542	5031A
1N5542A	5031A
1N5542B	5031A
1N5543	5032A
1N5543A	5032A
1N5543B	5032A
1N5544	5034A
1N5544A	5034A
1N5544B	5034A
1N5545	5035A
1N5545A	5035A
1N5545B	5035A
1N5546	5036A
1N5546A	5036A
1N5546B	5036A
1N5550	580
1N5551	580
1N5552	580
1N5553	506
1N5554	506
1N5559	5071A
1N5559A	5071A
1N5560	138A
1N5560A	138A
1N5561	5072A
1N5561A	5072A
1N5561B	5072A
1N5562	139A
1N5562A	139A
1N5563	140A
1N5563A	140A
1N5564	5074A
1N5564A	5074A
1N5565	142A
1N5565A	142A
1N5566	143A
1N5566A	143A
1N5566B	143A
1N5567	145A
1N5567A	145A
1N5568	5075A
1N5568A	5075A
1N5568B	5075A
1N5569	5077A
1N5569A	5077A
1N5569B	5075A
1N5570	5079A
1N5570A	5079A
1N5571	5080A
1N5571A	5080A
1N5572	5081A
1N5572A	5081A
1N5573	146A
1N5573A	146A
1N5574	5084A
1N5574A	5084A
1N5574B	5075A
1N5575	147A
1N5575A	147A
1N5576	5085A
1N5576A	5085A
1N5577	5086A
1N5577A	5086A
1N5578	5087A
1N5578A	5087A
1N5579	5088A
1N5579A	5088A
1N5580	5089A
1N5580A	5089A
1N5580B	5089A
1N5581	5090A
1N5581A	5090A
1N5582	149A
1N5582A	149A
1N5583	5092A
1N5583A	5092A
1N5583B	5092A
1N5584	5093A
1N5584A	5093A
1N5584B	5093A
1N5585	150A
1N5585A	150A
1N5586	5095A
1N5586A	5095A
1N5586B	5095A
1N5587	5096A
1N5587A	5096A
1N5587B	5096A
1N5588	151A
1N5588A	151A
1N5588B	151A
1N5589	5097A
1N5589A	5097A
1N5590	5098A
1N5590A	5098A
1N5590B	5098A
1N5591	5100A
1N5591A	5100A
1N5592	5101A
1N5592A	5101A
1N5592B	5101A
1N5593	5103A
1N5593A	5103A
1N5593B	5103A
1N5594	5105A
1N5594A	5105A
1N5594B	5105A
1N5605	177
1N5606	177
1N5607	177
1N5610	177
1N5615	506
1N5616	506
1N5617	506
1N5618	506
1N5619	506
1N5620	506
1N5621	506
1N5624	5802
1N5624GP	5806
1N5625	5804
1N5625GP	5806
1N5626	5806
1N5626GP	5806
1N5627	5808
1N5627GP	156
1N5629	4902
1N5629A	4902
1N5636	4918
1N5636A	4918
1N5639	4926
1N5639A	4926
1N5640	4928
1N5640A	4928
1N5643	4934
1N5643A	4934
1N5650	4950
1N5650A	4950
1N5653	4958
1N5653A	4958
1N5665	4988
1N5665A	4988
1N5670A	5001A
1N5671A	5003A
1N5679	116
1N5680	116
1N5681	610
1N5681A	610
1N5683	611
1N5683A	611
1N5684	612
1N5684A	612
1N5687	613
1N5687A	613
1N5689	614
1N5689A	614
1N5696	610
1N5696A	610
1N5699	612
1N5699A	612
1N5702	613
1N5702A	613
1N5711	583
1N5712	584
1N5713	584
1N5719	177
1N5728	5009A
1N5728B	5009A
1N5729	5010A
1N5729B	5010A
1N5729C	5010T1
1N5729D	5010T1
1N5730	5011A
1N5730B	5011A
1N5731	5013A
1N5731B	5013A
1N5732	5014A
1N5732B	5014A
1N5733	5015A
1N5733B	5015A
1N5734	5016A
1N5734A	5016A
1N5734B	5016A
1N5734C	5016A
1N5734D	5016A
1N5735	5018A
1N5735B	5018A
1N5736	5019A
1N5736B	5019A
1N5737	5020A
1N5737B	5020A
1N5738	5021A
1N5738B	5021A
1N5739	5022A
1N5739A	5022A
1N5739B	5022A
1N5740	5024A
1N5740B	5024A
1N5741	5025A
1N5741B	5025A
1N5742	5027A
1N5742B	5027A
1N5743	5029A
1N5743B	5029A
1N5744	5030A
1N5744B	5030A
1N5745	5031A
1N5745B	5031A
1N5746	5033A
1N5746B	5033A
1N5746C	5033A
1N5746D	5033A
1N5747	5035A
1N5747B	5035A
1N5748	5036A
1N5748B	5036A
1N5749	5037A
1N5749B	5037A
1N5750	5038A
1N5750B	5038A
1N5751	5039A
1N5751B	5039A
1N5752	5040A
1N5752B	5040A
1N5753	5041A
1N5753B	5041A
1N5754	5042A
1N5754B	5042A
1N5755	5044A
1N5755B	5044A
1N5756	5045A
1N5756B	5045A
1N5757B	5046A
1N5759	6407
1N5759A	6407
1N5760	6407
1N5760A	6408
1N5761	6408
1N5761A	6407
1N5767	177
1N5817	585
1N5818	585
1N5819	585
1N5820	586
1N5821	586
1N5822	586
1N5826	6084
1N5827	6084
1N5828	6084
1N5829	6084
1N5830	6084
1N5831	6084
1N5832	6094
1N5833	6094
1N5834	6094
1N5837	5000A
1N5837A	5000A
1N5837B	5000A
1N5838	5001A
1N5838A	5001A
1N5838B	5001A
1N5839	5002A
1N5839A	5002A
1N5839B	5002A
1N5840	5003A
1N5840A	5003A
1N5840B	5003A
1N5841	5004A
1N5841A	5004A
1N5841B	5004A
1N5842	5005A
1N5842A	5005A
1N5842B	5005A
1N5843	5006A
1N5843A	5006A
1N5843B	5006A
1N5844	5007A
1N5844A	5007A
1N5844B	5007A
1N5845	5008A
1N5845A	5008A
1N5845B	5068A
1N5846	5009A
1N5846A	5009A
1N5846B	5009A
1N5847	5010A
1N5847A	5010A
1N5847B	5010A
1N5848	5011A
1N5848A	5011A
1N5848B	5011A
1N5849	5012A
1N5849A	5012A
1N5849B	5012A
1N5850A	5013A
1N5850B	5013A
1N5851	5014A
1N5851A	5014A
1N5851B	5071A
1N5852	138A
1N5852A	138A
1N5852B	5015A
1N5853	5016A
1N5853A	5016A
1N5853B	5016A
1N5854	5017A
1N5854A	5017A
1N5854B	5017A
1N5855	5018A
1N5855A	139A
1N5855B	5018A
1N5856	5019A
1N5856A	5019A
1N5856B	5019A
1N5857	5020A
1N5857A	5020A
1N5857B	5020A
1N5858	5021A
1N5858A	142A
1N5858B	142A
1N5859	5022A
1N5859A	5022A
1N5859B	5022A
1N5860	5023A
1N5860A	5023A
1N5860B	5023A
1N5861	5024A
1N5861A	5024A
1N5861B	5024A
1N5862	5025A
1N5862A	5025A
1N5862B	5025A
1N5863	5026A
1N5863A	5026A
1N5863B	5026A
1N5864	5027A
1N5864A	5027A
1N5864B	5027A
1N5865	5028A
1N5865A	5028A
1N5865B	5028A
1N5866	5029A
1N5866A	5029A
1N5866B	5029A
1N5867	5030A
1N5867A	5030A

PART NUMBER	NTE REPLACEMENT
1N5867B	5030A
1N5868	5031A
1N5868A	5031A
1N5868B	5031A
1N5869	5032A
1N5869A	5032A
1N5869B	5032A
1N5870	5033A
1N5870A	5033A
1N5870B	5033A
1N5871	5034A
1N5871A	5034A
1N5871B	5034A
1N5872	5035A
1N5872A	5035A
1N5872B	5035A
1N5873	5036A
1N5873A	5036A
1N5873B	5036A
1N5874	5037A
1N5874A	5037A
1N5874B	5037A
1N5875	5038A
1N5875A	5038A
1N5875B	5038A
1N5876	5039A
1N5876A	5039A
1N5876B	5039A
1N5877	5040A
1N5877A	5040A
1N5877B	5040A
1N5878	5041A
1N5878A	5041A
1N5878B	5041A
1N5879	5042A
1N5879A	5042A
1N5879B	5042A
1N5880	5043A
1N5880A	5043A
1N5880B	5043A
1N5881	5044A
1N5881A	5044A
1N5881B	5044A
1N5882	5045A
1N5882A	5045A
1N5882B	5045A
1N5883	5046A
1N5883A	5046A
1N5883B	5046A
1N5884	5047A
1N5884A	5047A
1N5884B	5047A
1N5885	5048A
1N5885A	5048A
1N5885B	5048A
1N5886	5049A
1N5886A	5049A
1N5886B	5049A
1N5887	5050A
1N5887A	5050A
1N5887B	5050A
1N5888	5051A
1N5888A	5051A
1N5888B	5051A
1N5889	5052A
1N5889A	5072A
1N5889B	5052A
1N5890	5098A
1N5890A	5098A
1N5890B	5053A
1N5891	5099A
1N5891A	5099A
1N5891B	5054A
1N5892	5055A
1N5892A	5055A
1N5892B	5055A
1N5893	5056A
1N5893A	5056A
1N5893B	5056A
1N5894	5057A
1N5894A	5057A
1N5894B	5057A
1N5895	5058A
1N5895A	5058A
1N5895B	5058A
1N5896	5059A
1N5896A	5059A
1N5896B	5059A
1N5897	5059A
1N5897A	5059A
1N5897B	5059A
1N5907	4900
1N5908	4900
1N5913	5111A
1N5913A	5111A
1N5913B	5111A
1N5914	5112A
1N5914A	5112A
1N5914B	5112A
1N5915	5113A
1N5915A	5113A
1N5915B	5113A
1N5916	5114A
1N5916A	5114A
1N5916B	5114A
1N5917	5115A
1N5917A	5115A
1N5917B	5115A
1N5918	5116A
1N5918A	5116A
1N5918B	5116A
1N5919	5117A
1N5919A	5117A
1N5919B	5117A
1N5920	5119A
1N5920A	5119A
1N5920B	5119A
1N5921	5120A
1N5921A	5120A
1N5921B	5120A
1N5922	5121A
1N5922A	5121A
1N5922B	5121A
1N5923	5122A
1N5923A	5122A
1N5923B	5122A
1N5924	5124A
1N5924A	5124A
1N5924B	5124A
1N5925	5125A
1N5925A	5125A
1N5925B	5125A
1N5926	5126A
1N5926A	5126A
1N5926B	5126A
1N5927	5127A
1N5927A	5127A
1N5927B	5127A
1N5928B	5128A
1N5929B	5131A
1N5930	5131A
1N5930A	5161A
1N5930B	5161A
1N5931	5133A
1N5931A	5133A
1N5931B	5133A
1N5932	5135A
1N5932A	5135A
1N5932B	5135A
1N5933	5136A
1N5933A	5136A
1N5933B	5136A
1N5934	5137A
1N5934A	5137A
1N5934B	5137A
1N5935	5139A
1N5935A	5139A
1N5935B	5139A
1N5936	5141A
1N5936A	5141A
1N5936B	5141A
1N5937	5142A
1N5937A	5142A
1N5937B	5142A
1N5938	5143A
1N5938A	5143A
1N5938B	5143A
1N5939	5144A
1N5939A	5144A
1N5939B	5144A
1N5940	5145A
1N5940A	5145A
1N5940B	5145A
1N5941	5146A
1N5941A	5146A
1N5941B	5146A
1N5942	5147A
1N5942A	5147A
1N5942B	5147A
1N5943	5148A
1N5943A	5148A
1N5943B	5148A
1N5944	5150A
1N5944A	5150A
1N5944B	5150A
1N5945	5151A
1N5945A	5151A
1N5945B	5151A
1N5946	5152A
1N5946A	5152A
1N5946B	5152A
1N5947	5153A
1N5947A	5153A
1N5947B	5153A
1N5948	5155A
1N5948A	5155A
1N5948B	5155A
1N5949	5156A
1N5949A	5156A
1N5949B	5156A
1N5950	5157A
1N5950A	5157A
1N5950B	5157A
1N5951	5158A
1N5951A	5158A
1N5951B	5158A
1N5952	5159A
1N5952A	5159A
1N5952B	5159A
1N5953	5161A
1N5953A	5161A
1N5953B	5161A
1N5954	5162A
1N5954A	5162A
1N5954B	5162A
1N5955	5164A
1N5955A	5164A
1N5955B	5164A
1N5956	5166A
1N5956A	5166A
1N5956B	5166A
1N5968A	611
1N5986B	5063A
1N5987B	5065A
1N5988	5005A
1N5988A	5005A
1N5988B	5066A
1N5989	5006A
1N5989A	5006A
1N5989B	5006A
1N5990	5007A
1N5990B	5007A
1N5991	5008A
1N5991A	5008A
1N5991B	5008A
1N5992	5009A
1N5992B	5009A
1N5995A	5013A
1N5995C	5013T1
1N5995D	5013T1
1N5996A	5014A
1N5997A	5015A
1N5998A	5016A
1N5999A	5018A
1N6000A	5019A
1N6000C	5019T1
1N6000D	5019T1
1N6001A	5020A
1N6002A	5021A
1N6002C	5021T1
1N6002D	5021T1
1N6003A	5022A
1N6003B	143A
1N6004A	5024A
1N6005A	5025A
1N6006A	5027A
1N6006B	5077A
1N6007A	5029A
1N6008A	5030A
1N6009A	5031A
1N6010A	5033A
1N6011A	5035A
1N6012A	5036A
1N6013A	5037A
1N6014A	5038A
1N6015A	5039A
1N6016A	5040A
1N6017A	5041A
1N6018A	5042A
1N6019A	5044A
1N6020A	5045A
1N6021A	5046A
1N6022A	5047A
1N6023A	5049A
1N6024A	5050A
1N6025A	5051A
1N6026A	5052A
1N6027A	5053A
1N6028A	5055A
1N6029A	5056A
1N6030A	5058A
1N6031A	5059A
1N6031B	5105A
1N6056	4951
1N6056A	4951
1N6082	5008A
1N6082A	5008A
1N6082B	5008A
1N6083	5009A
1N6083A	5009A
1N6084	5010A
1N6084A	5010A
1N6084B	5010A
1N6085	5011A
1N6085A	5011A
1N6086	5013A
1N6086A	5013A
1N6086B	5013A
1N6087	5014A
1N6087A	5014A
1N6088	5015A
1N6088A	5015A
1N6089	5016A
1N6089A	5016A
1N6090	5018A
1N6090A	5018A
1N6091	5019A
1N6091A	5019A
1N6095	6084
1N6096	6084
1N6097	6094
1N6098	6094
1N6263	583
1N6267	4902
1N6267A	4902
1N6267CA	4903
1N6274	4918
1N6274A	4918
1N6274AC	4919
1N6274C	4919
1N6274CA	4919
1N6277	4926
1N6277A	4926
1N6277AC	4927
1N6277C	4927
1N6277CA	4927
1N6278	4928
1N6278A	4928
1N6278AC	4929
1N6278C	4929
1N6278CA	4929
1N6281	4934
1N6281A	4934
1N6281AC	4935
1N6281C	4935
1N6281CA	4935
1N6288	4950
1N6288A	4950
1N6288AC	4951
1N6288C	4951
1N6288CA	4951
1N6291	4958
1N6291A	4958
1N6291AC	4959
1N6291C	4959
1N6291CA	4959
1N6303	4988
1N6303A	4988
1N6303AC	4989
1N6303C	4989
1N6303CA	4989
1N33974	139A
1N36001	519
1N40021D	116
1N43182	614
1N400210	116
1N-22	109
1N-34A	109
1N-60	109
1N-60P	110MP
1N-4002	116
1NA4	109
1NA4G	109
1NAG1	109
1NC61684	116
1NE11	156
1NE11-OR	125
1NE11-A	125
1NE11-B	125
1NE11-C	125
1NE11-D	125
1NE11-K	125
1NE11-L	125
1NE11-Y	125
1NE11A	125
1NE11B	125
1NE11C	125
1NE11D	125
1NE11K	125
1NE11L	125
1NE11R	125
1NE11Y	125
1NF11	156
1NJ27	125
1NJ33233	109
1NJ60284	109
1NJ61224	109
1NJ61225	136A
1NJ61433	177
1NJ61675	109
1NJ61676	116
1NJ61677	177
1NJ61725	177
1NJ61726	116
1NJ70972	113A
1NJ70973	109
1NJ70976	506
1NJ70980	177
1NJ70989	109
1NJ71126	507
1NJ71185	109
1NJ71186	507
1NJ71223	113A
1NJ71224	177
1NK862B	5075A
1NS8080A	8080A
1NS8212	8212
1NZ61	125
1NZ61-A	125
1NZ61-B	125
1NZ61-C	125
1NZ61-D	125
1NZ61-K	125
1NZ61-L	125
1NZ61-OR	125
1NZ61-Y	125
1OM30	5990
1P20-0006	128
1P20-0060	109
1P20-0023	506
1P20-0029	108
1P20-0032	289
1P20-0034	108
1P20-0036	196
1P20-0037	108
1P20-0041	123AP
1P20-0046	290
1P20-0061	519
1P20-0083	152
1P20-0086	135A
1P20-0103	295
1P20-0110	108
1P20-0120	116
1P20-0122	123AP
1P20-0155	236
1P20-0157	222
1P20-0159	159
1P20-0167	175
1P20-0172	322
1P20-0213	290
1P20-0214	123
1P60F	109
1P100	5402
1P101	5402
1P102	5402
1P103	5404
1P541	109
1P542	109
1P643	5800
1P644	5801
1P645	5803
1P646	5803
1P647	5804
1P649	5806
1QE11	506
1R0	177
1R0E	177
1R0F	116
1R0H	116
1R01	116
1R1D	116
1R1K	116
1R2	177
1R2A	116
1R2D	116
1R2E	116
1R3.6	134A
1R3A	177
1R3B	506
1R3D	116
1R3G	116
1R3J	116
1R4	177
1R5.1	135A
1R5A	116
1R5B	116
1R5BZ61	5801
1R5BZ61-A	125
1R5BZ61-B	125
1R5BZ61-C	125
1R5BZ61-D	125
1R5BZ61-K	125
1R5BZ61-L	125
1R5BZ61-OR	125
1R5BZ61-Y	125
1R5DZ61	125
1R5DZ61-A	125
1R5DZ61-B	125
1R5DZ61-C	125
1R5DZ61-D	125
1R5DZ61-K	143A
1R5DZ61-L	125
1R5DZ61-OR	125
1R5DZ61-Y	125
1R5G	580
1R5GZ41	580
1R5GZ61	125
1R5GZ61-A	125
1R5GZ61-B	125
1R5GZ61-C	125
1R5GZ61-D	125
1R5GZ61-K	125
1R5GZ61-L	125
1R5GZ61-OR	125
1R5GZ61-Y	125
1R5GZ61,FA-1	125
1R5GZ61FA-1	125
1R5H	116
1R5JZ61	5806
1R5JZ61-A	125
1R5JZ61-B	125
1R5JZ61-C	125
1R5JZ61-D	125
1R5JZ61-K	125
1R5JZ61-L	125
1R5JZ61-OR	125
1R5JZ61-V	125
1R5TH61	558
1R7.5	138A
1R7.5A	138A
1R8.2	5072A
1R8.2A	5072A
1R8.2B	5072A
1R9	116
1R9.1	131
1R9.1A	139A
1R9.1B	139A
1R9D	116
1R9H	116
1R9I	117
1R9J	116
1R9L	116
1R9P	116
1R9U	116
1R10	140A
1R10(SCR)	5454
1R10A	140A
1R10B	140A
1R10D3K	177
1R10D3L	506
1R11	5074A
1R11A	5074A
1R11B	5074A
1R12	142A
1R12A	142A
1R12B	142A
1R13	143A
1R13A	143A
1R13B	143A
1R15	145A
1R15A	145A
1R15B	145A
1R16	5075A
1R16A	5075A
1R16B	5075A
1R18	5077A
1R18A	5077A
1R18B	5077A
1R20	5079A
1R20(SCR)	5455
1R20A	5079A
1R20B	5079A
1R22	5080A
1R22A	5080A
1R22B	5080A
1R24	5081A
1R24A	5081A
1R24B	5081A
1R27	146A
1R27A	146A
1R27B	146A
1R30	5084A
1R30(SCR)	5456
1R30A	5084A
1R30B	5084A
1R30DF	156
1R31	506
1R33	147A
1R33A	147A
1R33B	147A
1R36	5085A
1R36A	5085A
1R36B	5085A
1R39	5085A
1R39A	5086A
1R39B	5086A
1R43	5087A
1R43A	5087A
1R43B	5087A
1R47	5088A
1R47A	5088A
1R47B	5088A
1R51	5089A
1R51A	5089A
1R51B	5089A
1R56	5090A
1R56A	5090A
1R56B	5090A
1R62	149A
1R62A	149A
1R62B	149A
1R68	5092A
1R68A	5092A
1R68B	5092A
1R75	5093A
1R75A	5093A
1R75B	5093A
1R81	116
1R82	150A
1R82A	150A
1R82B	150A
1R90	117
1R91	5095A
1R91A	5095A
1R91B	5095A
1R96	125
1R100	5096A
1R100A	5096A
1R100B	5096A
1R106B1	5455
1R106B1-C	5455
1R106B2	5455
1R106B3	5455
1R106B4	5455
1R106B41	5455
1R106D1	5457
1R106D2	5457
1R106D3	5457
1R106D4	5457
1R106D41	5457
1R110	151A
1R110A	151A
1R110B	151A
1R120	5097A
1R120A	5097A
1R120B	5097A
1R122A1	5462
1R122B1	5463
1R122C1	5465
1R122D1	5465
1R122E1	5466
1R122F1	5461
1R122M1	5466
1R130	5098A
1R130A	5098A
1R130B	5098A
1R140	5099A
1R140A	5099A
1R140B	5099A
1R150	5100A
1R150A	5100A
1R150B	5100A
1R160	5101A
1R160A	5101A
1R160B	5101A
1R161R16B	5075A
1R180	5103A
1R180A	5103A
1R180B	5103A
1R200	5105A
1R200A	5105A
1R200B	5105A
1R801	389
1R914	519
1R2790	613
1R-TR24	108
1R-TR25	108
1R-TR57	369
1R-TR77	197
1R-TR87	192A
1RC5	5444
1RC10	5455
1RC20	5455
1RC30	5457
1RC40	5457
1RD3899	6006
1RE10	116
1RLD	116
1R0E	177
1R0F	116
1R0H	116
1RTR51	199
1RTR75	191
1S005	116
1S020	5801
1S030	5800
1S016	116
1S021	5802
1S023	5804
1S025	5806
1S027	5808
1S031	116
1S032	5802
1S034	116
1S036	5806
1S038	125
1S054	116
1S058	125
1S1-0336-00-A	130
1S1Z09	116
1S11	109
1S11A	136A
1S12	109
1S13	109
1S14	109
1S15	109
1S16	109
1S17	519
1S17D1	109
1S19	109
1S20	109
1S32	109
1S33	109
1S34	109
1S34(TP)	109
1S34(TV)	109
1S34A	109
1S34S	109
1S35	109
1S36	116
1S37	5070A
1S38	177
1S39	125
1S40	5801
1S41	5002A
1S42	5803
1S43	5804
1S44	552
1S45	5806
1S46	5808
1S47	125
1S48	614
1S48A	613
1S49	614
1S50	110MP
1S51	5069A
1S52	136A
1S53	519
1S54	117
1S55	139A
1S56	139A
1S58	109
1S60	110MP
1S60(RECT)	116
1S60P	109
1S61	116
1S62	116
1S63	116
1S64	116
1S65	116
1S66	116
1S71	116
1S72	109
1S73	109
1S73A	109
1S74	109
1S75	109
1S76	109
1S77	109
1S77H	109
1S78	109
1S78H	109
1S79	109
1S79H	109
1S80	109
1S81	116
1S82	109
1S83	116
1S84	177
1S84H	116
1S85	614
1S85(Y)	614
1S85/0575024	614
1S85B0	614
1S85H	614
1S85L	614
1S85M	614
1S85SW	614
1S85V	116
1S85W	614
1S85W7	614
1S85WR	614
1S85WT	614
1S85Y	614
1S85YL	614
1S86	614
1S87	109
1S88	109
1S89	177
1S90	116
1S90R	177
1S91	116
1S91R	116
1S92	116
1S92R	116
1S93	116
1S93/SGJ	116
1S93R	116

PART NUMBER	NTE REPLACEMENT
1S94	116
1S94R	116
1S95	116
1S95R	116
1S96	125
1S96R	125
1S97	125
1S97R	125
1S98	125
1S98R	125
1S99	125
1S99A	125
1S99R	125
1S100	116
1S100R	116
1S101	116
1S101R	116
1S102	116
1S102R	116
1S103	116
1S103R	116
1S104	116
1S104R	116
1S105	116
1S105R	116
1S106	116
1S106A	116
1S106R	116
1S107	125
1S107R	125
1S108	125
1S108R	125
1S109	125
1S109R	125
1S110	116
1S110(SCR)	5552
1S110A	116
1S111	116
1S112	116
1S113	116
1S113A	116
1S114	116
1S115	116
1S116	116
1S117	125
1S118	116
1S119	519
1S120	116
1S121	116
1S121(RECT)	116
1S122	116
1S123	116
1S124	116
1S125	116
1S126	116
1S127	109
1S128	109
1S128FM	110MP
1S129	109
1S130	177
1S130(ZENER)	139A
1S131	177
1S132	177
1S133	5073A
1S134	116
1S135	141A
1S136	137A
1S136(RECT)	116
1S136(ZENER)	137A
1S137	145A
1S138	125
1S138(RECT)	125
1S138(ZENER)	5017A
1S139	5018A
1S140	5020A
1S141	142A
1S142	5024A
1S143	5075A
1S144	177
1S145	614
1S146	5832
1S147	116
1S148	116
1S149	116
1S150	116
1S151	5874
1S152	5874
1S153	5990
1S154	5990
1S155	177
1S155-1	177
1S156	5846
1S157	5832
1S158	5834
1S159	5836
1S160	5870
1S161	5872
1S162	5874
1S163	5876
1S164	5878
1S165	5880
1S166	5882
1S169	5920
1S170	5912
1S171	5914
1S172	5916
1S173	5918
1S174	5920
1S175	5922
1S176	5924
1S179	5920
1S180	109
1S180-M	116
1S180/5GB	116
1S180B	177
1S181	177
1S181-M	116
1S181FA	177
1S182	177
1S182-M	116
1S183	116
1S183-M	116
1S184	178MP
1S185	109
1S185OR	116
1S186	109
1S186(FM)	109
1S186FM	110MP
1S187	109
1S187S	109
1S188	109
1S188-FM	109
1S188-TV-M	109
1S188A	110MP
1S188AM	109
1S188AR	110MP
1S188F	109
1S188F-M2	109
1S188FM	109
1S188FM1	109
1S188FM1A	110MP
1S188FM2	110MP
1S188FM-1	109
1S188FM-2	109
1S188FMA	110MP
1S188FMI	110MP
1S188G	110MP
1S188KM-1	109
1S188MPX	110MP
1S188P	110MP
1S188PM	110MP
1S188S	110MP
1S188TV	109
1S188TV(MP)	110MP
1S189	109
1S189FM	110MP
1S189FM(MP)	110MP
1S190	5010A
1S191	5012A
1S192	5014A
1S193	5072A
1S194	5018A
1S195	5019A
1S196	5020A
1S197	5021A
1S198	144A
1S199	5077A
1S200	178MP
1S204	116
1S205	116
1S206	116
1S207	116
1S208	116
1S208/2SJ2A	117
1S209	116
1S209/2SJ4A	117
1S210	125
1S210/2SJ6A	125
1S211	125
1S211/2SJ8A	125
1S211A	136A
1S212	5017A
1S213	5017A
1S213C	614
1S214	5017A
1S215	140A
1S216	140A
1S217	139A
1S218	177
1S220	5068A
1S221	136A
1S222	555
1S223	138A
1S224	5073A
1S225	140A
1S226	5074A
1S227	125
1S228	143A
1S229	144A
1S230	145A
1S231	5075A
1S232	5076A
1S233	5077A
1S234	5078A
1S235	5079A
1S236	5080A
1S237	5081A
1S238	5082A
1S239	146A
1S240	5084A
1S241	147A
1S242	5085A
1S243	5086A
1S244	5087A
1S245	5088A
1S246	5088A
1S247	5089A
1S248	5089A
1S249	5090A
1S250	149A
1S251	5092A
1S251B	614
1S252	5093A
1S253	150A
1S254	5095A
1S255	5096A
1S256	151A
1S257	151A
1S258	5097A
1S259	5098A
1S260	5099A
1S261	5100A
1S262	5176A
1S263	5178A
1S264	5181A
1S265	5182A
1S266	5184A
1S267	5186A
1S268	5187A
1S268A	116
1S268AA	116
1S268AA,T	116
1S268T	116
1S269	5188A
1S270	5189A
1S271	5190A
1S272	5191A
1S273	5192A
1S274	5193A
1S275	5194A
1S276	5195A
1S277	5196A
1S278	5197AK
1S279	5198A
1S280	5199A
1S281	5200A
1S282	5202A
1S283	5203A
1S284	5204A
1S285	5205A
1S286	5206A
1S287	5208A
1S288	5208A
1S289	5290A
1S290	5210A
1S291	5212A
1S292	5214A
1S293	5215A
1S294	5216A
1S295	5217A
1S296	5219A
1S297	5220A
1S298	5221A
1S300	5223A
1S301	5224A
1S301.5	145A
1S301GR	519
1S302	5225A
1S303	5226A
1S304	5015A
1S306	177
1S306M	519
1S307	177
1S309	116
1S310	116
1S310H	116
1S311	117
1S311H	116
1S311N	116
1S312	116
1S312(HITACHI)	506
1S312A	116
1S313	116
1S313H	116
1S314	116
1S314H	116
1S314N	116
1S315	116
1S315(HITACHI)	506
1S315H	116
1S316	125
1S318	109
1S319	109
1S320	135A
1S322	177
1S323	109
1S325	519
1S326	519
1S327	116
1S328	116
1S329	125
1S330	5010A
1S330A	5010A
1S330A1	135A
1S331	137A
1S331A	5070A
1S331AZ	5070A
1S332	138A
1S332M	5071A
1S333	5072A
1S333Y	5072A
1S334	139A
1S334K	139A
1S334M	139A
1S334N	139A
1S335	5019A
1S336	5020A
1S337	5021A
1S337-Y	142A
1S337A	142A
1S337E	142A
1S337Y	142A
1S338	5023A
1S338Q	143A
1S338U	144A
1S339	5027A
1S340	5116A
1S341	5118A
1S341W1	614
1S341W2	614
1S341W3	614
1S342	5120A
1S343	5122A
1S344	5124A
1S345	5125A
1S346	5126A
1S347	5070A
1S348	5129A
1S349	5133A
1S351	611
1S351-S	611
1S351B	611
1S351M	611
1S351R	611
1S351S	611
1S351W	611
1S351W1	611
1S351W2	611
1S351W3	611
1S352	614
1S352A	614
1S352M	614
1S352N	612
1S352R	614
1S353	613
1S353M	614
1S354	109
1S355	109
1S356	109
1S357	109
1S358	116
1S358(S)	116
1S358A	116
1S358S	116
1S359	116
1S367	116
1S368	116
1S369	116
1S370	116
1S371	116
1S372	116
1S373	116
1S374	116
1S375	116
1S376	116
1S377	116
1S378	116
1S379	116
1S380	116
1S381	116
1S382	116
1S385	5920
1S390	116
1S393	116
1S394	116
1S395	116
1S396	116
1S397	125
1S398	125
1S399	116
1S400	116
1S401	125
1S402	125
1S403	506
1S404	116
1S405	125
1S406	125
1S407	506
1S410	5832
1S411	5834
1S413	5838
1S415	5842
1S417	5846
1S419	5848
1S420	5872
1S421	5874
1S422	5920
1S423	5878
1S425	5882
1S426	109
1S426FM	109
1S426G	109
1S426GFM	109
1S427	5886
1S428	109
1S430	5800
1S431	5801
1S432	5802
1S434	5804
1S436	5806
1S438	5808
1S441	109
1S441(RECT)	5830
1S442	109
1S442(RECT)	5830
1S443(RECT)	5830
1S444	177
1S444(RECT)	5832
1S445(RECT)	5832
1S446	109
1S446(RECT)	5834
1S446D	109
1S447	109
1S447P	109
1S448	109
1S449	109
1S451	109
1S452	109
1S453	109
1S454	109
1S455	109
1S456	116
1S457	116
1S458	116
1S459	116
1S460	519
1S461	519
1S465	519
1S466	109
1S467R	109
1S470	5012A
1S471	5014A
1S472	5018A
1S473	5020A
1S473-7A	519
1S473H	519
1S474	5023A
1S475	5027A
1S476	5030A
1S477	5034A
1S478	5037A
1S479	5040A
1S480	5070A
1S481	5071A
1S482	139A
1S483	5074A
1S484	144A
1S485	5077A
1S486	5080A
1S487	5083A
1S488	5085A
1S489	5088A
1S490	5179AK
1S491	5120A
1S492	5185AK
1S493	5126A
1S494	5190A
1S495	5194AK
1S496	5197A
1S497	5201AK
1S498	5204AK
1S499	5146A
1S500	519
1S501	519
1S501M	519
1S535	614
1S535-1	614
1S542	109
1S543	112
1S544	5886
1S545	5890
1S546	5928
1S547	5932
1S548	519
1S550	5072A
1S551	5072A
1S553	177
1S553T	613
1S554	614
1S554T	614
1S555	177
1S556	614
1S557	125
1S557H	125
1S558	116
1S559	116
1S560	177
1S560H	177
1S588	116
1S589	109
1S593	116
1S597	145A
1S611	5002A
1S612	5006A
1S613	5068A
1S614	5068A
1S616	138A
1S617	138A
1S618	140A
1S619	143A
1S620	5075A
1S622	5081A
1S623	5083A
1S624	5037A
1S632	5006A
1S633	5069A
1S634	135A
1S635	5070A
1S636	5071A
1S642	177
1S661	116
1S662	125
1S663	125
1S664	506
1S665	5920
1S669	5920
1S673	5920
1S685	116
1S686	125
1S687	125
1S688	506
1S689	174
1S689A	174
1S689BK	174
1S690	5067A
1S691	5069A
1S692	136A
1S693	177
1S694	5072A
1S695	140A
1S696	142A
1S697	145A
1S698	5077A
1S699	5080A
1S700	146A
1S701	5174A
1S702	5176A
1S703	5178A
1S704	5181A
1S704A	5008A
1S704B	5008A
1S705	5183A
1S706	5186A
1S707	5188A
1S708	5191A
1S709	5194A
1S710	5197A
1S711	5200A
1S712	5174A
1S713	5176A
1S714	5178A
1S715	5181A
1S716	5183A
1S717	5186A
1S718	5188A
1S719	5191A
1S720	5194A
1S721	5197A
1S722	5200A
1S731	519
1S744	109
1S745	109
1S746	109
1S747	109
1S748	109
1S750	112
1S750(2)	112
1S750GR	112
1S750S	112
1S751	174
1S752	5002A
1S752(H)	5002A
1S753	5006A
1S753(H)	5005A
1S753H	5066A
1S754	5008A
1S754H	5067A
1S755	5009A
1S755(H)	5010A
1S755H	5069A
1S756	5012A
1S757	5014A
1S757(H)	5015A
1S757A	139A
1S758	5017A
1S758(H)	5017A
1S758GS	139A
1S758H	5073A
1S759	5019A
1S759(H)	5020A
1S759H	140A
1S760	5022A
1S760(H)	5022A
1S760H	143A
1S761	5025A
1S761(H)	5025A
1S762	5028A
1S763	5031A
1S763(H)	5031A
1S764	5033A
1S764(H)	5034A
1S765	147A
1S765(H)	5037A
1S765H	147A
1S766	611
1S767	611
1S767A	611
1S769	611
1S773	519
1S773A	519
1S775	519
1S776	519
1S781	5920
1S788	109
1S790	5920
1S801	519
1S802	519
1S803	519
1S804	519
1S805	519
1S806	519
1S807	519
1S808	519
1S811	116
1S812	116
1S813	125
1S814	125
1S815	506
1S816	116
1S817	116
1S818	125
1S819	125
1S820	506
1S821	5920
1S822	5920
1S826	5920
1S827	5920
1S831	5920
1S832	5920
1S836	5920
1S837	5920
1S841	116
1S842	116
1S843	116
1S844	116
1S844N	116
1S846	116
1S846N	116
1S847	125
1S848	125
1S848N	125
1S849	116
1S849,R	116
1S849R	116
1S850	125
1S850N	125
1S851	109
1S852	506
1S853	614
1S854	5804
1S854L	614
1S855	5806
1S856	5806
1S857	5808
1S858	5808
1S859	5809
1S860	5809
1S871	116
1S871A	116
1S871B	125
1S871C	125
1S871D	506
1S871E	506
1S872	116
1S872A	116
1S872B	125
1S872C	125
1S872D	506
1S873	5920
1S874	5920
1S881	116
1S881A	116
1S881B	125
1S881C	125
1S881D	506
1S881E	506
1S882	116
1S882A	116
1S882B	125
1S882C	125
1S882D	506
1S882E	506
1S885	116
1S887	116
1S891	611
1S892	612
1S893	614
1S920	177
1S921	177
1S921(RECT)	5802
1S922	5804
1S922(DIODE)	177
1S922(RECT)	5804
1S923	177
1S923(RECT)	5806
1S924	5808
1S925	5809
1S926	5874
1S926G	109
1S927	5878
1S928	5882
1S929	5886
1S930	5890
1S931	5916
1S932	5920
1S933	5924
1S934	5928
1S935	5932
1S936	5986
1S939	5998
1S940	6002
1S941	177
1S941/4454C	116
1S942	177
1S943	116
1S946	116
1S947	116
1S948	116
1S949	125
1S950	125
1S951	177
1S952	177
1S953	519
1S954	519
1S954(2)	519
1S955	177
1S957	5804
1S958	5806
1S959	5808
1S960	5809
1S961	519
1S962	5920
1S963	117
1S967	5920
1S977	519
1S978	519
1S981	519
1S982	519
1S983	177
1S984	519
1S985	519
1S986	519
1S987	519
1S988	519
1S989	5194A
1S990	177
1S990(ZENER)	145A
1S990-AM	177
1S990A	177
1S990AM	109
1S990S	145A
1S990S(DIODE)	177
1S990S(ZENER)	145A
1S993	5004A
1S994	5067A
1S994A	177
1S994S	5069A
1S994Y	138A

PART NUMBER	NTE REPLACEMENT
1S995	611
1S1000	112
1S1000A	112
1S1001	177
1S1004	116
1S1005	109
1S1006	109
1S1007	109
1S1007S	109
1S1008	109
1S1009	109
1S1010	109
1S1012	116
1S1013	116
1S1014	125
1S1015	125
1S1016	506
1S1017	506
1S1021	116
1S1022	116
1S1023	125
1S1024	125
1S1025	506
1S1026	506
1S1027	116
1S1028	116
1S1029	125
1S1030	125
1S1031	506
1S1032	506
1S1039	5804
1S1040	5806
1S1041	5808
1S1042	5809
1S1043	116
1S1044	116
1S1045	125
1S1046	125
1S1047	506
1S1048	506
1S1052	177
1S1053	177
1S1061	116
1S1062	116
1S1063	116
1S1064	116
1S1065	125
1S1066	125
1S1067	506
1S1068	506
1S1071	156
1S1072	5802
1S1073	5804
1S1074	5806
1S1075	5808
1S1076	156
1S1094	5015A
1S1095	5018A
1S1096	116
1S1097	143A
1S1098	5025A
1S1100	5031A
1S1101	5034A
1S1102	5085A
1S1114	138A
1S1114A	138A
1S1121	166
1S1122	167
1S1123	168
1S1124	168
1S1125	169
1S1126	170
1S1127	170
1S1128	5312
1S1129	5313
1S1130	5314
1S1131	5314
1S1132	5315
1S1135	5312
1S1136	5313
1S1137	5314
1S1138	5314
1S1139	5315
1S1146	116
1S1147	519
1S1154	5015A
1S1155	177
1S1156	5019A
1S1160	134A
1S1161	5069A
1S1163	138A
1S1164	5072A
1S1165	140A
1S1166	143A
1S1167	5075A
1S1169	5081A
1S1170	5034A
1S1171	5085A
1S1172	5069A
1S1173	5070A
1S1174	5071A
1S1175	5073A
1S1176	5074A
1S1177	145A
1S1178	5075A
1S1179	5078A
1S1180	5081A
1S1181	5083A
1S1182	5085A
1S1183	5087A
1S1184	5089A
1S1185	5176A
1S1186	5178A
1S1187	5181A
1S1187FA	116
1S1188	5183A
1S1189	5186A
1S1190	5188A
1S1191	5075A
1S1192	5194A
1S1193	5197A
1S1194	5200A
1S1195	5205A
1S1196	5208A
1S1197	5212A
1S1201	137A
1S1201(H)	5013A
1S1202	5071A
1S1202(H)	5015A
1S1204	601
1S1207	177
1S1208	116
1S1209	601
1S1210	601
1S1211	601
1S1212	177
1S1212A	177
1S1213	177
1S1214	177
1S1215	177
1S1216	177
1S1217	177
1S1218	177
1S1218GR	177
1S1219	177
1S1219H	519
1S1220	177
1S1221	116
1S1222	116
1S1223	125
1S1224	116
1S1225	125
1S1225A	125
1S1226	506
1S1230	116
1S1230H	116
1S1231	116
1S1232	116
1S1232H	116
1S1232N	116
1S1233	125
1S1233H	125
1S1233N	125
1S1234	125
1S1234H	125
1S1234N	125
1S1235	150A
1S1237	506
1S1238	506
1S1239	109
1S1244	109
1S1245	109
1S1246	109
1S1255A	125
1S1262	5920
1S1263	5920
1S1272	5920
1S1273	5920
1S1281	5920
1S1282	5920
1S1288	5914
1S1290	5920
1S1295	116
1S1296	116
1S1297	116
1S1298	116
1S1299	116
1S1301	519
1S1302	177
1S1303	177
1S1305	177
1S1308	143A
1S1314	116
1S1315	611
1S1316	116
1S1317	116
1S1318	116
1S1319	116
1S1320	116
1S1321	5812
1S1322	5812
1S1323	5814
1S1324	5814
1S1326	5815
1S1329	5817
1S1329B	614
1S1330	5817
1S1333	552
1S1341	116
1S1342	116
1S1343	116
1S1344	116
1S1345	125
1S1346	116
1S1347	125
1S1348	125
1S1349	506
1S1350	5912
1S1351	5832
1S1352	5834
1S1353	5836
1S1354	5838
1S1355	5842
1S1356	5846
1S1357	5848
1S1359	116
1S1359A	116
1S1360	116
1S1360A	116
1S1361	116
1S1361A	116
1S1362	125
1S1362A	125
1S1363	125
1S1363A	125
1S1364	506
1S1364A	506
1S1365	116
1S1365A	116
1S1366	116
1S1366A	116
1S1367	116
1S1367A	116
1S1368	125
1S1368A	125
1S1369	125
1S1369A	125
1S1370	506
1S1370A	506
1S1371	5001A
1S1371A	5001A
1S1372	5006A
1S1372A	5006A
1S1373	5068A
1S1373A	5068A
1S1374	136A
1S1374A	136A
1S1375	137A
1S1375A	137A
1S1376	5071A
1S1376A	5071A
1S1377	5073A
1S1377A	5073A
1S1378	140A
1S1378A	5019A
1S1379	143A
1S1379A	143A
1S1380	5075A
1S1380A	5075A
1S1381	5029A
1S1381A	5029A
1S1382	5082A
1S1382A	5082A
1S1383	5084A
1S1383A	5084A
1S1384	5085A
1S1384A	5085A
1S1385	5039A
1S1385A	5039A
1S1386	5002A
1S1386A	5002A
1S1387	5006A
1S1387A	5006A
1S1388	5068A
1S1388A	5068A
1S1389	136A
1S1389A	136A
1S1390	137A
1S1390A	137A
1S1391	138A
1S1391A	138A
1S1392	5073A
1S1392A	5073A
1S1393	140A
1S1393A	140A
1S1394	143A
1S1394A	143A
1S1395	5075A
1S1395A	5075A
1S1396	5029A
1S1396A	5029A
1S1397	5082A
1S1397A	5082A
1S1398	5084A
1S1398A	5084A
1S1399	5085A
1S1399A	5085A
1S1400	5039A
1S1400A	5039A
1S1401	5089A
1S1401A	5089A
1S1402	5063A
1S1402R	5063A
1S1403	134A
1S1403R	134A
1S1404	5069A
1S1404R	5069A
1S1405	136A
1S1405R	136A
1S1406	137A
1S1406R	137A
1S1407	138A
1S1407R	138A
1S1408	5073A
1S1408R	5073A
1S1409	140A
1S1409R	140A
1S1410	144A
1S1410R	144A
1S1411	5075A
1S1411R	5075A
1S1412	5079A
1S1412R	5079A
1S1413	5082A
1S1413R	5082A
1S1414	5084A
1S1414R	5084A
1S1415	5085A
1S1415R	5085A
1S1417	5999
1S1418	6003
1S1420H	177
1S1421	5087A
1S1421R	5087A
1S1422	148A
1S1422R	148A
1S1424	5174A
1S1424R	5174AK
1S1425	5176A
1S1425R	5176AK
1S1426	5178A
1S1426R	5178AK
1S1427	5181A
1S1427R	5181AK
1S1429	5183A
1S1429R	5183AK
1S1430	5186A
1S1430R	5186AK
1S1439	5176A
1S1439R	5176AK
1S1440	5178A
1S1440R	5178AK
1S1441	5181A
1S1441R	5181AK
1S1443	5183A
1S1443R	5183AK
1S1444	5186A
1S1444R	5186AK
1S1445R	5188AK
1S1454	5920
1S1464	112
1S1465	174
1S1472	117
1S1473	519
1S1475	5804
1S1476	5806
1S1477	5808
1S1478	5809
1S1481	5920
1S1486	116
1S1487	116
1S1489	5804
1S1490	5806
1S1491	5808
1S1492	5809
1S1500	610
1S1501	614
1S1502	614
1S1502C	614
1S1503	614
1S1514	177
1S1515	177
1S1516	177
1S1517	506
1S1517A	506
1S1532	177
1S1533	614
1S1544	177
1S1544A	519
1S1545	177
1S1546	116
1S1547	116
1S1548	116
1S1549	112
1S1553	177
1S1553(TV)	177
1S1553C(TV)	177
1S1553V	519
1S1553V(TV)	177
1S1554	177
1S1554(TV)	177
1S1554V	177
1S1554V(TV)	177
1S1555	177
1S1555(TV)	177
1S1555-1	177
1S1555-5	506
1S1555-K	177
1S1555-S	177
1S1555-Z	177
1S1555FA1	177
1S1555TP	177
1S1555TP3	177
1S1555TV	177
1S1555V	177
1S1555V(TV)	177
1S1555Z	177
1S1558	614
1S1575	5878
1S1576	5882
1S1577	5886
1S1578	5890
1S1579	178MP
1S1580	178MP
1S1582	610
1S1585	519
1S1585(TPE3)	519
1S1586	177
1S1587	177
1S1588	519
1S1588-FM	109
1S1588V	519
1S1589	177
1S1591	506
1S1592	506
1S1593	506
1S1594	506
1S1595	506
1S1596	506
1S1597	116
1S1598	116
1S1599	116
1S1600	116
1S1601	116
1S1602	116
1S1604	116
1S1605	125
1S1607	5920
1S1608	125
1S1609	506
1S1610	506
1S1613	504
1S1614	6068
1S1615	6072
1S1621	177
1S1621-0	177
1S1621-R	177
1S1621-Y	177
1S1622	116
1S1623	116
1S1624	116
1S1625	116
1S1626	5866
1S1627	5868
1S1629	5846
1S1630	5848
1S1643R	6027
1S1644R	6031
1S1648	614
1S1650	177
1S1651	177
1S1652	5944
1S1652R	5875
1S1653	5946
1S1653R	5877
1S1654	5986
1S1654R	5987
1S1655	5988
1S1655R	5989
1S1657	174
1S1658	614
1S1658FA-2	614
1S1658FA-3	614
1S1660	5834
1S1660R	5835
1S1661	5836
1S1661R	5837
1S1662	5854
1S1662R	5855
1S1663	5856
1S1663R	5857
1S1664	116
1S1665	117
1S1666	116
1S1667	116
1S1668	116
1S1668F	116
1S1669	125
1S1670	166
1S1671	167
1S1672	168
1S1673	169
1S1674	170
1S1675	170
1S1678	116
1S1679	116
1S1680	116
1S1681	116
1S1682	125
1S1683	125
1S1684	116
1S1685	116
1S1686	116
1S1688	125
1S1689	125
1S1690	109
1S1690A	116
1S1691	116
1S1691A	116
1S1692	117
1S1692A	116
1S1693	116
1S1693A	116
1S1694	117
1S1694A	116
1S1695	125
1S1695A	116
1S1696	116
1S1696A	116
1S1697	116
1S1698	116
1S1699	712
1S1700	712
1S1701	178MP
1S1702	506
1S1703	506
1S1704	506
1S1704A	506
1S1705	506
1S1705A	506
1S1706	506
1S1707	506
1S1707A	506
1S1708	506
1S1709	506
1S1710	519
1S1711	519
1S1712	519
1S1712A	519
1S1713	519
1S1714	519
1S1715	137A
1S1716	5015A
1S1717	5073A
1S1717L	139A
1S1718	139A
1S1718/4454C	140A
1S1720	156
1S1720R	156
1S1721	112
1S1722	112
1S1723	116
1S1724	116
1S1724R	116
1S1725	116
1S1725R	116
1S1726	116
1S1726R	116
1S1727	116
1S1727R	116
1S1728	139A
1S1728R	116
1S1729R	116
1S1730	116
1S1730R	116
1S1731	125
1S1731R	125
1S1732	125
1S1732R	125
1S1733	506
1S1733R	506
1S1734	135A
1S1735	137A
1S1736	138A
1S1737	5073A
1S1738	5074A
1S1739	142A
1S1740	145A
1S1741	5076A
1S1742	5079A
1S1743	5082A
1S1744	5084A
1S1745	5085A
1S1746	5087A
1S1747	148A
1S1748	149A
1S1749	5093A
1S1750	150A
1S1751	5095A
1S1752	5096A
1S1753	151A
1S1754	5097A
1S1755	5098A
1S1756	5099A
1S1758	613
1S1759	613
1S1766	135A
1S1767	5070A
1S1768	138A
1S1769	5073A
1S1770	5074A
1S1771	143A
1S1772	145A
1S1773	5076A
1S1774	5029A
1S1775	5081A
1S1776	5084A
1S1777	147A
1S1781	5073A
1S1782	5073A
1S1783	5073A
1S1784	149A
1S1785	5092A
1S1786	150A
1S1787	5096A
1S1788	5097A
1S1789	5098A
1S1790	5100A
1S1791	5103A
1S1792	5105A
1S1801-02	519
1S1805	611
1S1805A	611
1S1806	611
1S1806A	611
1S1807	112
1S1821R	125
1S1825	177
1S1829	125
1S1829A	125
1S1829B	125
1S1829C	125
1S1829D	125
1S1829K	125
1S1829L	125
1S1829Y	125
1S1830	125
1S1830A	125
1S1830B	125
1S1830C	125
1S1830D	125
1S1830K	125
1S1830L	125
1S1830Y	125
1S1832	525
1S1834	552
1S1835	552
1S1836	503
1S1837	504
1S1841	5990
1S1842	5994
1S1843	5998
1S1844	6002
1S1845	116
1S1845A	116
1S1845B	116
1S1845C	125
1S1845D	125
1S1845E	506
1S1846	116
1S1846A	116
1S1846B	116
1S1846C	125
1S1846D	125
1S1846E	506
1S1847A	5920
1S1848	116
1S1848A	5920
1S1849	116
1S1849R	116
1S1850	116
1S1850R	116
1S1851	116
1S1851R	116
1S1855	506
1S1881AM	116
1S1882	506
1S1885	116
1S1885-3	116
1S1885FA	116
1S1886	116
1S1887	552
1S1887(FA)	116
1S1887A	552
1S1887A(FA-1)	116
1S1887A-T3	552
1S1887A-Z	116
1S1887A,FA	116
1S1887AFA	116
1S1887AFA-1	116
1S1887ALC	116
1S1887ALC-7	116
1S1887EA	116
1S1887FA	116
1S1887FA-1	116
1S1888	552
1S1888V	116
1S1890	5806
1S1891	156
1S1892	156
1S1895	614
1S1897	551
1S1898	551
1S1899	551
1S1906	116
1S1910	506
1S1911	506
1S1914	5801
1S1916	5804
1S1917	5806
1S1918	5800
1S1919	5809
1S1920	506
1S1921A	506
1S1921B	506
1S1921C	506
1S1921D	506
1S1921E	506
1S1921F	506
1S1922	112
1S1923	614
1S1923A	614
1S1924	614
1S1925	112
1S1926	112
1S1926K	112
1S1926M	112
1S1928	112
1S1936	5920
1S1941	116
1S1942	116
1S1943	116
1S1944	156
1S1948	116
1S1949	116
1S1950	116
1S1951	147A
1S1952	5061A
1S1953	5065A
1S1954	5067A
1S1955	135A
1S1956	5070A
1S1957	5071A
1S1958	5072A
1S1959	139A
1S1960	140A
1S1961	5074A
1S1962	142A
1S1963	144A
1S1964	145A
1S1965	5075A
1S1966	5077A
1S1967	5079A
1S1968	5080A
1S1969	5081A
1S1970	146A
1S1971	5084A
1S1973	519
1S1992	177
1S1993	177
1S1994	177
1S1995	177
1S1997	5920
1S2000	5920
1S2005	5920
1S2019	125
1S2030A	5004A
1S2031	5007A
1S2033	5005A
1S2033A	5005A
1S2036	5006A
1S2036A	5006A
1S2038	614
1S2039	5007A
1S2039A	5007A
1S2039B	5007A
1S2043	5008A
1S2043A	5008A

PART NUMBER	NTE REPLACEMENT
1S2045(STUD)	5174AK
1S2046(STUD)	5176AK
1S2047	5009A
1S2047(STUD)	5178AK
1S2047A	5009A
1S2047B	5009A
1S2049(STUD)	5183AK
1S2051	5010A
1S2051(STUD)	5186AK
1S2051A	5010A
1S2051B	135A
1S2053(STUD)	5188AK
1S2055(STUD)	5191A
1S2056	5011A
1S2056A	5011A
1S2056B	5011A
1S2057(STUD)	5194AK
1S2059(STUD)	5197AK
1S2061(STUD)	5200AK
1S2062	5013A
1S2062A	5013A
1S2062B	5013A
1S2063	125
1S2064	5809
1S2067	5017A
1S2068	5017A
1S2069	5017A
1S2070	519
1S2071	519
1S2071A	519
1S2073	519
1S2074H	177
1S2075	519
1S2075A	5015A
1S2075B	5015A
1S2075K	519
1S2076	177
1S2076(AX4)	519
1S2076-27	519
1S2076-TF1	519
1S2076-TFI	519
1S2076A	519
1S2076A-07	177
1S2076MC	519
1S2076P	519
1S2080	116
1S2081	116
1S2082	5016A
1S2082A	5016A
1S2085	614
1S2085A	614
1S2086	612
1S2086A	612
1S2087	614
1S2087A	614
1S2088	612
1S2088A	612
1S2089	611
1S2090	112
1S2091	177
1S2091(DIODE)	177
1S2091(ZENER)	5018A
1S2091-BK	177
1S2091-BL	177
1S2091-W	177
1S2091A	5018A
1S2091BK	177
1S2091BL	177
1S2091W	177
1S2092	177
1S2093	6408
1S2094	611
1S2095	519
1S2095A	519
1S2097	177
1S2098	177
1S2099	519
1S2100	5019A
1S2100A	5019A
1S2107	5067A
1S2107A	5067A
1S2108	5068A
1S2108A	5068A
1S2109	5009A
1S2109A	5069A
1S2110	5020A
1S2110A	5020A
1S2111	136A
1S2111A	136A
1S2112	137A
1S2112A	5012A
1S2112AFA-1	137A
1S2113	5071A
1S2113A	5071A
1S2114	138A
1S2114A	138A
1S2115	5072A
1S2115A	5072A
1S2116	139A
1S2116A	139A
1S2117	140A
1S2117A	140A
1S2118	5074A
1S2118A	5074A
1S2119	142A
1S2119A	142A
1S2120	5021A
1S2120A	5021A
1S2121	145A
1S2121A	145A
1S2122	5076A
1S2122A	5075A
1S2123	5077A
1S2123A	5077A
1S2124	116
1S2125	5070A
1S2126	5073A
1S2127	142A
1S2128	5070A
1S2129	5073A
1S2130	5022A
1S2130A	5022A
1S2131	5078A
1S2131C	614
1S2132	5096A
1S2133	5098A
1S2134	519
1S2137	5073A
1S2138	142A
1S2139	611
1S2139A	611
1S2139B	611
1S2139C	612
1S2139D	614
1S2140	116
1S2142	611
1S2143	611
1S2144	177
1S2144A	177
1S2144Z	177
1S2145	519
1S2147	610
1S2147A	612
1S2147B	612
1S2147C	612
1S2150	5024A
1S2150A	5024A
1S2160A	5025A
1S2180	5027A
1S2180A	5027A
1S2186	177
1S2186GR	177
1S2187	112
1S2188	611
1S2189	614
1S2190	5072A
1S2191	5072A
1S2192	5072A
1S2193	5016A
1S2194	5070A
1S2195	5073A
1S2196	142A
1S2198	112
1S2198HC	112
1S2200	5029A
1S2200A	5029A
1S2206	612
1S2207	614
1S2207-9	611
1S2208	611
1S2209	611
1S2210	178MP
1S2211	178MP
1S2212	519
1S2220	5030A
1S2220A	5030A
1S2222	555
1S2226	116
1S2227	116
1S2228	116
1S2229	116
1S2230	116
1S2231	125
1S2233	5806
1S2234	5808
1S2235	5809
1S2236	611
1S2238	116
1S2239	116
1S2239C	612
1S2240	5031A
1S2240A	5031A
1S2241	116
1S2242	116
1S2243	125
1S2244	116
1S2245	116
1S2246	116
1S2267	614
1S2268	614
1S2269	116
1S2270	5033A
1S2270A	5033A
1S2271	116
1S2272	116
1S2273	125
1S2274	125
1S2276	177
1S2277	116
1S2278	116
1S2279	116
1S2280	125
1S2281	125
1S2283(STUD)	5174AK
1S2284(STUD)	5176AK
1S2285(STUD)	5178AK
1S2286	5181A
1S2286(STUD)	5181AK
1S2286A	5181A
1S2287	5183A
1S2287(STUD)	5183AK
1S2287A	5183A
1S2289	5186A
1S2289(STUD)	5186AK
1S2289A	5186A
1S2291	5188A
1S2291(STUD)	5188AK
1S2291A	5188A
1S2293	5191A
1S2293(STUD)	5191AK
1S2293A	5191A
1S2295	5194A
1S2295(STUD)	5194AK
1S2295A	5194A
1S2297	5197A
1S2297(STUD)	5197AK
1S2297A	5197A
1S2299	5197A
1S2299(STUD)	5200AK
1S2299A	5200A
1S2300	5035A
1S2300A	5035A
1S2302	5066A
1S2303	5067A
1S2304	135A
1S2306	506
1S2307	506
1S2308	506
1S2309	506
1S2310	116
1S2311	125
1S2312	125
1S2313	116
1S2314	125
1S2315	125
1S2316	116
1S2317	116
1S2318	125
1S2319	125
1S2323	125
1S2324	125
1S2325	506
1S2326	506
1S2330	5036A
1S2330A	5036A
1S2336	614
1S2339	610
1S2339-C	610
1S2339C	610
1S2339K	614
1S2340	611
1S2350	5804
1S2351	116
1S2352	116
1S2353	125
1S2354	125
1S2356	116
1S2357	116
1S2358	116
1S2359	116
1S2361	116
1S2362	116
1S2363	116
1S2364	125
1S2365	125
1S2366	506
1S2367	552
1S2368	506
1S2369	506
1S2370	552
1S2371	166
1S2371A	166
1S2372	116
1S2372A	167
1S2373	116
1S2373A	168
1S2374	116
1S2374A	169
1S2375	116
1S2375A	168
1S2376	116
1S2377	156
1S2378	5834
1S2378R	5835
1S2379	5804
1S2380	5806
1S2390	116
1S2391	116
1S2392	116
1S2393	116
1S2394	116
1S2395	116
1S2396	116
1S2397	125
1S2399	125
1S2400	125
1S2401	116
1S2402	116
1S2403	125
1S2404	116
1S2405	125
1S2406	125
1S2407	506
1S2408	5800
1S2409	156
1S2410	5802
1S2411	5803
1S2412	5804
1S2413	5805
1S2414	5806
1S2415	5800
1S2416	5801
1S2417	5802
1S2418	5803
1S2419	5804
1S2420	5805
1S2421	5806
1S2434	5870
1S2434R	5941
1S2435	5872
1S2435R	5943
1S2436	5944
1S2436R	5945
1S2437	5876
1S2437R	5947
1S2438	5878
1S2438R	5949
1S2439	5880
1S2439R	5881
1S2446	5980
1S2447	5982
1S2448	5986
1S2449	5988
1S2451	5992
1S2452	137A
1S2453	137A
1S2454	137A
1S2455	5801
1S2457	5804
1S2458	5806
1S2459	5809
1S2460	177
1S2461	177
1S2462	177
1S2463	116
1S2469	504
1S2470	504
1S2471	519
1S2471A	519
1S2471B	519
1S2471TA	177
1S2471V	519
1S2471V-Y	519
1S2472	519
1S2472T-77	177
1S2473	177
1S2473-T27	519
1S2473-T72	519
1S2473H	177
1S2473H-R	177
1S2473H-Y	519
1S2473HC	519
1S2473HJ	519
1S2473K	519
1S2473T	177
1S2473T72	519
1S2473V	519
1S2473VE	519
1S2479	109
1S2479R	5061A
1S2480	5063A
1S2480R	5063A
1S2481	5065A
1S2481R	5065A
1S2482	5066A
1S2482R	5066A
1S2483	134A
1S2483R	134A
1S2484	5067A
1S2484R	5067A
1S2485	5068A
1S2485R	5068A
1S2486	5069A
1S2486R	5069A
1S2487	135A
1S2488	136A
1S2489	137A
1S2490	5071A
1S2491	138A
1S2492	5072A
1S2493	139A
1S2494	140A
1S2495	5074A
1S2496	142A
1S2497	143A
1S2498	144A
1S2499	5075A
1S2500	5077A
1S2501	5079A
1S2502	5080A
1S2503	5081A
1S2504	146A
1S2505	5084A
1S2506	147A
1S2507	5085A
1S2508	5086A
1S2509	5087A
1S2510	5088A
1S2511	5089A
1S2512	148A
1S2513	149A
1S2514	5092A
1S2515	5093A
1S2516	150A
1S2517	5095A
1S2518	5096A
1S2519	151A
1S2520	5097A
1S2521	5098A
1S2522	5100A
1S2523	5101A
1S2524	5103A
1S2525	5105A
1S2536	5000A
1S2536R	5000A
1S2537	5002A
1S2537R	5002A
1S2538	5004A
1S2538R	5004A
1S2539	5066A
1S2539R	5006A
1S2540	134A
1S2540R	134A
1S2541	5067A
1S2541R	5067A
1S2542	5068A
1S2542R	5068A
1S2543	5069A
1S2543R	5069A
1S2544	136A
1S2545	136A
1S2546	5070A
1S2547	137A
1S2548	138A
1S2549	5016A
1S2550	139A
1S2551	140A
1S2552	5074A
1S2553	142A
1S2554	143A
1S2555	144A
1S2556	5075A
1S2557	5077A
1S2558	5029A
1S2559	5080A
1S2560	5081A
1S2561	146A
1S2562	5083A
1S2563	147A
1S2564	5085A
1S2565	5068A
1S2566	5039A
1S2567	5040A
1S2568	5041A
1S2569	148A
1S2570	149A
1S2571	5092A
1S2572	5046A
1S2573	150A
1S2574	5049A
1S2575	5050A
1S2588	519
1S2589	116
1S2590	116
1S2591	116
1S2592	125
1S2593	125
1S2594	506
1S2595	506
1S2597	177
1S2598	5806
1S2602	116
1S2603	116
1S2604	116
1S2605	116
1S2606	116
1S2607	125
1S2608	125
1S2609	125
1S2610	125
1S2611	506
1S2612	506
1S2613	506
1S2614	506
1S2618	125
1S2620	504
1S2632	5916
1S2636	611
1S2638	611
1S2638VVC	614
1S2672	506
1S2673	506
1S2674	506
1S2675	506
1S2676	506
1S2677	506
1S2678	506
1S2679	506
1S2686	612
1S2686D	611
1S2687	614
1S2687A	612
1S2687AA	612
1S2687D	612
1S2687S-1	612
1S2688	614
1S2688B	614
1S2688C	614
1S2688E	614
1S2688EA	614
1S2688EB	614
1S2689	614
1S2689B	614
1S2692	555
1S2692AB	519
1S2711	506
1S2712F-FA	506
1S2716	5920
1S2717	5920
1S2745	515
1S2746	515
1S2747	5809
1S2756	506
1S2757	116
1S2758	5809
1S2759	5809
1S2760	5800
1S2761	5801
1S2763	5804
1S2764	5804
1S2765	5805
1S2766	5805
1S2767	5803
1S2768	5803
1S2769	137A
1S2770	137A
1S2771	137A
1S2774	137A
1S2775	552
1S2775(FA-1)	552
1S2775,FA	552
1S2775,FA-1	552
1S2775FA1	116
1S2775FA-1	552
1S2775TPA2	552
1S2776	156
1S2777	116
1S2779	5804
1S2780	5806
1S2782	5809
1S2787	611
1S2788	177
1S2788B	177
1S2789	612
1S2789W	611
1S2790	614
1S2790W	613
1S2790WT	613
1S2790YL	614
1S2791	112
1S2793	5920
1S2794	5920
1S2795	5920
1S2828A	5804
1S2830A	5808
1S2831A	5809
1S2832	116
1S2833	159
1S2834	506
1S2835	596
1S2837	595
1S2867T	612
1S2885	552
1S3006	5071A
1S3007	138A
1S3008	5072A
1S3009	139A
1S3010	140A
1S3011	5074A
1S3012	142A
1S3013	143A
1S3016	145A
1S3016(RECT)	116
1S3016(ZENER)	5075A
1S3016R	116
1S3018	5077A
1S3020	5079A
1S3022	5080A
1S3024	5081A
1S3027	146A
1S3030	5084A
1S3033	147A
1S3036	5085A
1S3039	5086A
1S3043	5087A
1S3047	5088A
1S3051	5089A
1S3056	5090A
1S3062	149A
1S3068	5092A
1S3075	5093A
1S3076	177
1S3082	150A
1S3091	5095A
1S3100	5096A
1S3110	151A
1S3120	5097A
1S3130	5098A
1S3150	5100A
1S3160	5101A
1S3180	5103A
1S3195	116
1S3200	5105A
1S3305	5010A
1S3332	5071A
1S3445	5007A
1S3585	109
1S3745	515
1S4006	5120A
1S4006A	5120A
1S4007	5121A
1S4007A	5121A
1S4008	5122A
1S4008A	5122A
1S4009	5124A
1S4009A	5124A
1S4010	5125A
1S4010A	5125A
1S4011	5126A
1S4011A	5126A
1S4012	5127A
1S4012A	5127A
1S4013	5128A
1S4013A	5128A
1S4015	5130A
1S4015A	5130A
1S4016	5131A
1S4016A	5131A
1S4018	5133A
1S4018A	5133A
1S4020	5135A
1S4020A	5135A
1S4022	5136A
1S4022A	5136A
1S4024	5137A
1S4024A	5137A
1S4027	5139A
1S4027A	5139A
1S4030	5141A
1S4030A	5141A
1S4033	5142A
1S4033A	5142A
1S4036	5143A
1S4036A	5143A
1S4039	5144A
1S4039A	5144A
1S4043	5145A
1S4043A	5145A
1S4047	5146A
1S4047A	5146A
1S4051	5147A
1S4051A	5147A
1S4056	5148A
1S4056A	5148A
1S4062	5150A
1S4062A	5150A
1S4068	5151A
1S4068A	5151A
1S4075	5152A
1S4082	5153A
1S4082A	5153A
1S4091	5155A
1S4091A	5155A
1S4100	5156A
1S4100A	5156A
1S4110	5157A
1S4110A	5157A
1S4120	5158A
1S4120A	5158A
1S4130	5159A
1S4130A	5159A
1S4150	5161A
1S4150A	5161A
1S4160	5162A
1S4160A	5162A
1S4180	5164A
1S4180A	5164A
1S4200	5166A
1S4266	109
1S4266FM	109
1S4735	5010A
1S5015	5191A
1S5015A	5191A
1S5016	5192A
1S5016A	5192A
1S5018	5194A
1S5018A	5194A
1S5020	5196A
1S5020A	5196A
1S5022	5197A
1S5022A	5197A
1S5024	5198A
1S5024A	5198A
1S5027	5200A
1S5027A	5200A
1S5030	5202A
1S5030A	5202A
1S5033	5203A
1S5033A	5203A
1S5036	5204A
1S5036A	5204A
1S5039	5205A
1S5039A	5205A
1S5043	5206A
1S5043A	5206A
1S5047	5208A
1S5047A	5208A
1S5051	5210A
1S5051A	5210A
1S5056	5212A
1S5056A	5212A
1S5062	5214A
1S5062A	5214A
1S5068	5215A
1S5068A	5215A
1S5075	5216A
1S5075A	5216A
1S5082	5217A
1S5082A	5217A
1S5091	5219A
1S5091A	5219A
1S5100	5220A
1S5100A	5220A
1S5110	5222A
1S5110A	5222A
1S5120	5223A
1S5120A	5223A
1S5130	5224A
1S5130A	5224A
1S5150	5226A
1S5150A	5226A
1S5295G	552
1S5295I	552
1S5295J	552
1S5351	614
1S5454	109
1S6006	5181A
1S6006A	5181A
1S6007	5182A
1S6007A	5182A
1S6008	5183A
1S6008A	5183A
1S6010	5186A
1S6010A	5186A
1S6011	5187A
1S6011A	5187A
1S6012	5188A
1S6012A	5188A
1S6013	5189A
1S6013A	5189A
1S6015	5191A
1S6015A	5191A
1S6016	5192A
1S6016A	5192A
1S6018	5194A
1S6018A	5194A
1S6020	5196A
1S6020A	5196A

PART NUMBER	NTE REPLACEMENT
1S6022	5197A
1S6022A	5197A
1S6024	5198A
1S6024A	5198A
1S6027	5200A
1S6027A	5200A
1S6030	5202A
1S6030A	5202A
1S6033	5203A
1S6033A	5203A
1S6036	5204A
1S6036A	5204A
1S6039	5205A
1S6039A	5205A
1S6043	5206A
1S6043A	5206A
1S6047	5208A
1S6047A	5208A
1S6051	5210A
1S6051A	5210A
1S6056	5212A
1S6056A	5212A
1S6062	5214A
1S6062A	5214A
1S6068	5215A
1S6068A	5215A
1S6075	5216A
1S6075A	5216A
1S6082	5217A
1S6082A	5217A
1S6091	5219A
1S6091A	5219A
1S6100	5220A
1S6100A	5220A
1S6110	5222A
1S6110A	5222A
1S6120	5223A
1S6120A	5223A
1S6130	5224A
1S6130A	5224A
1S6150	5226A
1S6150A	5226A
1S6160	5227A
1S6160A	5227A
1S6180	5230A
1S6180A	5230A
1S6200	5232A
1S6288B	612
1S6289	612
1S7030A	5004A
1S7033	5005A
1S7033A	5005A
1S7033B	5005A
1S7036	5006A
1S7036A	5006A
1S7036B	5006A
1S7039	5007A
1S7039A	5007A
1S7039B	5007A
1S7043	5008A
1S7043A	5008A
1S7043B	5008A
1S7047	5009A
1S7047A	5009A
1S7047B	5009A
1S7051	5010A
1S7051A	5010A
1S7051B	5010A
1S7056	5011A
1S7056A	5011A
1S7056B	5011A
1S7062	5013A
1S7062A	5013A
1S7062B	5013A
1S7068	5014A
1S7068A	5014A
1S7068B	5014A
1S7075	5015A
1S7075A	5015A
1S7075B	5015A
1S7082	5016A
1S7082A	5016A
1S7082B	5016A
1S7091	5018A
1S7091A	5018A
1S7091B	5018A
1S7100	5019A
1S7100A	5019A
1S7100B	5019A
1S7110	5020A
1S7110A	5020A
1S7110B	5020A
1S7120	5021A
1S7120A	5021A
1S7120B	5021A
1S7130	5022A
1S7130A	5022A
1S7130B	5022A
1S7150	5024A
1S7150A	5024A
1S7150B	5024A
1S7160A	5025A
1S7958	90
1S9413	116
1S9908	109
1S11941	177
1S15188	519
1S15551	177
1S15555	519
1S16009	5185A
1S16009A	5185A
1S17176	138A
1S19413	116
1S19413T	116
1S20751C	177
1S21447	519
1S22079	612
1S22790YL	614
1S26870	612
1S26875-1	612
1S-180	177
1S-331	137A
1S-446D	109
1S-990	109
1S-1053	519
1S-1209	116
1S-1555-Z	177
1S-1555V	177
1S-2144Z	177
1S-2472	519
1S-M2511-8010S035B	519
1S-M2511-8010S-035B	519
1SB01-02	116
1SB50S	614
1SB69-06	612
1SC683	161
1SC929	161
1SC1566	157
1SC2367	177
1SD2	116
1SD1212	116
1SD-2	116
1SIZ09	116
1SL1885	116
1SN1835	506
1SO30	116
1SO31	116
1SO32	116
1SO34	116
1SO36	116
1SO38	125
1SO54	116
1SO58	125
1SR1FM4	116
1SR1K	116
1SR11-100	156
1SR11-200	116
1SR11-400	156
1SR11-600	116
1SR12-50	156
1SR12-100	156
1SR12-200	116
1SR12-400	156
1SR12-600	116
1SR12-800	159
1SR12-1000	125
1SR13-50	156
1SR13-100	156
1SR13-200	116
1SR13-400	156
1SR13-600	116
1SR13-800	159
1SR13-1000	125
1SR14-50	156
1SR14-100	156
1SR14-200	116
1SR14-400	156
1SR15-50	5800
1SR15-100	5801
1SR15-400	5804
1SR15-600	5806
1SR15-800	5808
1SR15-1000	5809
1SR16-50	5806
1SR16-100	5801
1SR16-400	5804
1SR16-600	5806
1SR16-800	5808
1SR16-1000	5809
1SR17-50	5800
1SR17-100	5801
1SR17-400	5804
1SR17-600	5806
1SR17-800	5808
1SR17-1000	5809
1SR30-200	116
1SR30-400	116
1SR30-600	116
1SR31-800	125
1SR31-1000	125
1SR32-1200	506
1SR32-1400	506
1SR32-1500	506
1SR34	519
1SR34-100	5802
1SR34-200	116
1SR35	519
1SR35-10	116
1SR35-100	116
1SR35-100-HT	116
1SR35-100-T3	116
1SR35-100-Z	116
1SR35-100A	116
1SR35-100A-Y	116
1SR35-200A	116
1SR35-400	116
1SR36	506
1SR55-50	156
1SR55-100	156
1SR55-200	116
1SR56-50	506
1SR56-100	506
1SR67-200	5313
1SR70-100	166
1SR70-200	167
1SR70-400	168
1SR70-800	170
1SR70-1000	170
1SR71-30	6084
1SR71-40	6084
1SR72-30	6094
1SR72-40	6094
1SR73-30	6094
1SR73-40	6094
1SR74-300	5920
1SR74-400	5920
1SR75-300	5920
1SR75-400	5920
1SR77-200	116
1SR77-400	156
1SR77-800	159
1SR77-1000	125
1SR78-200	116
1SR78-400	156
1SR79-800	159
1SR80-400	5920
1SR82-400	5920
1SR124-400	552
1SR124-400-Z	552
1SR124-400V-Z	552
1SR-35-100	116
1SR-35-400	116
1SRBA20Z	167
1SS16	112
1SS19	112
1SS24	178MP
1SS25	178MP
1SS26	178MP
1SS27	178MP
1SS28	178MP
1SS29	178MP
1SS30	519
1SS31	519
1SS49	519
1SS50	519
1SS51	519
1SS53	177
1SS54	519
1SS54-T4	519
1SS55	519
1SS68	519
1SS78	112
1SS81	177
1SS81-R	177
1SS81-T2	177
1SS81-Y	177
1SS82	552
1SS82-Y	552
1SS83	177
1SS85	553
1SS86	112
1SS95	177
1SS99	112
1SS103	555
1SS104	177
1SS104(FA)	177
1SS104FA	177
1SS106	584
1SS110	519
1SS110T	519
1SS110Y	519
1SS116	519
1SS118	519
1SS119	519
1SS119(MATSUSHITA)	519
1SS119(SONY)	519
1SS119(TEKNIKA)	519
1SS119-041T	519
1SS119-14	519
1SS119TD	519
1SS119TG	519
1SS120	519
1SS130	177
1SS131	519
1SS131T-77	519
1SS132	177
1SS132T	519
1SS132T-77	519
1SS133	177
1SS133-T2	177
1SS133-Y	177
1SS133HV	177
1SS133T	177
1SS135	177
1SS136	519
1SS144	552
1SS146	552
1SS146-T2	552
1SS146-Y	552
1SS148	519
1SS165	553
1SS166	553
1SS176	177
1SS176(FA)	519
1SS176FA	519
1SS178	519
1SS178(FA)	519
1SS178-Y	519
1SS178FA	519
1SS181	596
1SS184	595
1SS184-TE852	595
1SS184TE85L	595
1SS198	584
1SS216	553
1SS229	519
1SS233	590
1SS234	590
1SS235	591
1SS236	591
1SS241	553
1SS254	519
1SS270	177
1SS270A	519
1SS270TA	519
1SS355	519
1SS1119-T	519
1SS1555	519
1SS2354	519
1SS-82	552
1SV34	519
1SV35	519
1SV50	614
1SV53	614
1SV68	614
1SV68-04	614
1SV68-08	614
1SV69-03	611
1SV69-06	612
1SV70	616
1SV70-06	612
1SV72	110MP
1SV77	611
1SV89	612
1SV113	613
1SZ11	5026A
1SZ13	5037A
1SZ21	5076A
1SZ23	5085A
1SZ24	146A
1SZ25	5016A
1SZ26	5013A
1SZ27	5016A
1SZ28	5025A
1SZ29	5032A
1SZ39	5013A
1SZ40-11	5074A
1SZ40-12	142A
1SZ40-13	143A
1SZ40-15	145A
1SZ40-16	5075A
1SZ40-18	5077A
1SZ40-20	5079A
1SZ40-22	5080A
1SZ40-24	5081A
1SZ40-27	146A
1SZ40-30	5084A
1SZ40-33	147A
1SZ50	5013A
1SZ51	5013A
1SZ52	5013A
1SZ53	5013A
1SZ56-07	5015A
1SZ56-08	5016A
1SZ56-09	5124A
1SZ56-10	5125A
1SZ56-11	5126A
1SZ56-12	5127A
1SZ56-13	5128A
1SZ56-15	5130A
1SZ56-16	5131A
1SZ56-18	5133A
1SZ56-20	5135A
1SZ56-22	5136A
1SZ56-24	5137A
1SZ56-27	5139A
1SZ56-30	5141A
1SZ56-33	5142A
1T015	56004
1T1TA14	144A
1T2C1	116
1T2Z1	116
1T5.6	136A
1T5.6B	136A
1T6.2	137A
1T6.2B	137A
1T7.5	138A
1T7.5B	138A
1T9.1	139A
1T9.1A	139A
1T9.1B	139A
1T10	140A
1T10B	140A
1T11.5	141A
1T11.5A	141A
1T11.5B	141A
1T12	142A
1T12.8	143A
1T12.8B	143A
1T12A	142A
1T12B	142A
1T13	112
1T13A	112
1T13B	112
1T14	144A
1T14A	144A
1T14B	144A
1T15	145A
1T15B	145A
1T19-15B	145A
1T22	109
1T22(A)	109
1T22A	109
1T22AJ	109
1T22AM	110MP
1T22B	109
1T22G	109
1T23	109
1T23A	109
1T23B	109
1T23G	109
1T23J	109
1T23M	109
1T23S	110MP
1T25	612
1T26	109
1T26-2	109
1T27	146A
1T27B	146A
1T33	614
1T33A	147A
1T33B	147A
1T36	56006
1T38	56006
1T40	177
1T46	56006
1T48	56006
1T55	148A
1T55B	148A
1T62	149A
1T62A	149A
1T62B	149A
1T82	150A
1T82A	150A
1T82B	150A
1T110	151A
1T110A	151A
1T110B	151A
1T115	56004
1T188	109
1T205A	160
1T213	109
1T215	56004
1T220	132
1T229-2	116
1T231	109
1T236	109
1T240	109
1T240A	109
1T243	177
1T243M	139A
1T261	110MP
1T261(MP)	110MP
1T262	109
1T263	5089A
1T264	5089A
1T310	56006
1T315	56006
1T378	116
1T410	56006
1T415	56006
1T495	158
1T501	116
1T502	116
1T503	116
1T504	116
1T505	116
1T506	116
1T507	125
1T508	125
1T509	125
1T510	125
1T515	56008
1T615	56008
1T929	123AP
1T930	123AP
1T1331	110MP
1T2011	116
1T2012	116
1T2013	116
1T2014	116
1T2015	116
1T2016	116
1T20105	116
1TA5.6	136A
1TA5.6A	136A
1TA6.2	137A
1TA6.2A	137A
1TA6.2B	137A
1TA7.5	138A
1TA7.5A	138A
1TA9.1	139A
1TA9.1A	139A
1TA9.1B	118
1TA10	140A
1TA10A	140A
1TA11.5	141A
1TA11.5A	141A
1TA12	142A
1TA12.8	143A
1TA12.8A	143A
1TA12A	142A
1TA13	143A
1TA13A	143A
1TA13B	143A
1TA14	144A
1TA14A	144A
1TA14B	144A
1TA15	145A
1TA15A	145A
1TA25A	5081A
1TA27	146A
1TA27A	146A
1TA33	147A
1TA33A	147A
1TA55	148A
1TA55A	148A
1TA62	149A
1TA62A	149A
1TA82	150A
1TA82A	150A
1TA110	151A
1TA110A	151A
1TA7607AP	1545
1TA7608CP5	1532
1TA7609P-2	1496
1TB06	116
1TH61	558
1TH62	506
1TH-61	558
1TS05	116
1TT410	614
1TT921	177
1TT1168	614
1TT7215	506
1TT-410	614
1TV24237	120
1TW85B	614
1TWC8H	5073A
1TWC8L	5073A
1TWC8M	5073A
1U585F	123AP
1U585F/7825B	123AP
1V2	511
1V3074A20	116
1V3074A21	116
1V9002	109
1V68611A47	159
1V68611A47A	159
1V-5753	3022
1VA10	116
1W01-08J	5074A
1W1706	133
1W8358	123AP
1W8537	159
1W8995A	128
1W9148	159
1W9640	159
1W9640A	159
1W9723	123AP
1W9728	159
1W9728A	159
1W9782	159
1W9782A	159
1W9787	123AP
1W9810	159
1W9810A	159
1W9810S	159
1W9810SA	159
1W11700	159
1W11700A	159
1W11702	159
1W11702A	159
1W11706	133
1W11708-1	128
1W11708-2	128
1W11711	159
1W11711A	290
1WB-5A	135A
1WB-6A	136A
1WB-7A	5071A
1WB-9D	5073A
1WB-11D	5074A
1WB-13D	143A
1WB-15D	145A
1WB-17D	5076A
1WB-20D	5079A
1WB-25D	5081A
1WB-30D	5084A
1WB-35D	5085A
1WB-45D	5087A
1WB-55D	148A
1WB-65D	149A
1WB-75D	5093A
1WB-85D	150A
1WB-95D	5095A
1WB-100D	5096A
1WB-110D	151A
1WB-120D	5097A
1WB-130D	5098A
1WB-140D	5099A
1WM6	116
1WS1	156
1WS2	156
1WS4	5804
1WS6	5806
1WS8	156
1WS10	156
1X0037CE	615P
1X0054CE	1140
1X0260CE	1658
1X0137CE	1751
1X0212CE	1671
1X0214CE	1576
1X0225CE	1377
1X0238CE	1676
1X0275CE	1572
1X0948CE	1782
1X5228B	5007A
1X9179	177
1X9805	177
1X9809	177
1Z3.3	5066A
1Z3.3A	5066A
1Z3.3T10.5	5066A
1Z3.6	134A
1Z3.6A	134A
1Z3.6B	134A
1Z3.6T5	5006A
1Z3.6T10	5006A
1Z3.6TS	5006A
1Z3.9	5067A
1Z3.9A	5067A
1Z4.3	5068A
1Z4.3A	5068A
1Z4.7	5069A
1Z4.7A	5069A
1Z5.1	135A
1Z5.1A	135A
1Z5.1T5	135A
1Z5.1T10	135A
1Z5.6	136A
1Z5.6A	136A
1Z6.2	137A
1Z6.2A	137A
1Z6.2T5	137A
1Z6.2T20	137A
1Z6.2T10	137A
1Z6.8	5071A
1Z6.8A	5071A
1Z7.5	138A
1Z7.5A	138A
1Z8.2	5072A
1Z8.2A	5072A
1Z8.2B	5072A
1Z8.2T5	5072A
1Z8.2T20	5072A
1Z8.2T10	5072A
1Z8.3	5072A
1Z9.1	139A
1Z9.1A	139A
1Z9.1B	139A
1Z9.1C	139A
1Z9.1D5	139A
1Z9.1D15	139A
1Z9.1D10	139A
1Z9.1T5	139A
1Z9.1T20	139A
1Z9.1T10	139A
1Z10	140A
1Z10A	140A
1Z10T5	140A
1Z10T10	140A
1Z10T20	140A
1Z11	5074A
1Z11A	5074A
1Z11T5	5074A
1Z11T10	5074A
1Z11T20	5074A
1Z12	142A
1Z12A	142A
1Z12B	142A
1Z12C	142A
1Z12T5	142A
1Z12T10	142A
1Z12T20	142A
1Z13	143A
1Z13A	143A
1Z13B	143A
1Z13C	143A
1Z13T5	143A
1Z13T10	143A
1Z13T20	143A
1Z14	144A
1Z14A	144A
1Z14B	144A
1Z14C	144A
1Z15	145A
1Z15A	145A
1Z15B	145A
1Z15C	145A
1Z15D	145A
1Z15D5	145A
1Z15D10	145A
1Z15D20	143A
1Z15T5	145A
1Z15T10	145A
1Z15T20	145A
1Z16	5075A
1Z16A	5075A
1Z16T5	5075A
1Z16T10	5075A
1Z16T20	5075A
1Z18	5077A
1Z18A	5077A
1Z18T5	5077A
1Z18T10	5077A
1Z18T20	5077A
1Z20	5079A
1Z20A	5079A
1Z20T5	5079A
1Z20T10	5079A
1Z20T20	5079A
1Z22	5080A
1Z22A	5080A
1Z22T5	5080A
1Z22T10	5080A
1Z22T20	5080A
1Z24	5081A
1Z24A	5081A
1Z24T5	5081A
1Z24T10	5081A
1Z24T20	5081A
1Z27	146A
1Z27A	146A
1Z27B	146A
1Z27C	146A
1Z27D	146A
1Z27D5	146A
1Z27D10	146A
1Z27T5	146A
1Z27T10	146A
1Z27T20	146A
1Z30	5084A
1Z30A	5084A
1Z30T5	5084A
1Z30T10	5084A
1Z30T20	5084A
1Z33	147A
1Z33A	147A
1Z33B	147A
1Z33C	147A
1Z33D	147A
1Z33D5	147A
1Z33D10	147A
1Z33T5	147A
1Z33T10	147A
1Z33T20	147A

PART NUMBER	NTE REPLACEMENT
1Z36	5085A
1Z36A	5085A
1Z39	5086A
1Z39A	5086A
1Z43	5087A
1Z43A	5087A
1Z47	5088A
1Z47A	5088A
1Z51	5089A
1Z51A	5089A
1Z55	148A
1Z55A	148A
1Z55B	148A
1Z56	5090A
1Z56A	5090A
1Z56B	5090A
1Z56C	148A
1Z62	149A
1Z62A	149A
1Z62B	149A
1Z62C	149A
1Z62D	149A
1Z62D5	149A
1Z62D10	149A
1Z68	5092A
1Z68A	5092A
1Z72	5093A
1Z75	5093A
1Z75A	5093A
1Z75FA	5093A
1Z82	150A
1Z82A	150A
1Z82B	150A
1Z82C	150A
1Z82D	150A
1Z82D5	150A
1Z82D10	150A
1Z91	5095A
1Z91.1D10	139A
1Z91.D10	139A
1Z91A	5095A
1Z100	5096A
1Z100A	5096A
1Z110	151A
1Z110A	151A
1Z110B	151A
1Z110C	151A
1Z110D	151A
1Z110D5	151A
1Z110D10	151A
1ZB12	142A
1ZB12B	142A
1ZB15	145A
1ZB15B	145A
1ZB27	146A
1ZB27B	146A
1ZB33	147A
1ZB33B	147A
1ZB82	150A
1ZB82B	150A
1ZC1LT10	5075A
1ZC3.6	134A
1ZC3.6T5	5006A
1ZC3.6T10	5006A
1ZC4.3T10.5	5068A
1ZC5.1	135A
1ZC5.6	136A
1ZC5.6T10.5	136A
1ZC6.2	137A
1ZC8.2T5	5072A
1ZC8.2T20	5072A
1ZC8.2T10	5072A
1ZC9.1	139A
1ZC9.1T5	139A
1ZC9.1T10	139A
1ZC10T5	140A
1ZC11T5	5074A
1ZC11T10	5074A
1ZC12	142A
1ZC12T5	142A
1ZC12T10	142A
1ZC12T20	142A
1ZC13T5	143A
1ZC13T10	143A
1ZC15	145A
1ZC15T5	145A
1ZC15T10	145A
1ZC16T5	5075A
1ZC16T10	5075A
1ZC18T5	5077A
1ZC18T10	5077A
1ZC20T5	5079A
1ZC20T10	5079A
1ZC22T5	5080A
1ZC22T10	5080A
1ZC24T5	5081A
1ZC24T10	5081A
1ZC27	146A
1ZC27T5	146A
1ZC27T10	146A
1ZC30T5	5084A
1ZC30T10	5084A
1ZCT10	140A
1ZD6	138A
1ZD8.2	5072A
1ZD8.2V	5072A
1ZD8-2	5072A
1ZD8-5	5072A
1ZD12	142A
1ZD82S	5072A
1ZD120	5097A
1ZD825	5072A
1ZD892	5072A
1ZF5.1T5	135A
1ZF5.1T10	135A
1ZF5.1T20	135A
1ZF5.6T5	136A
1ZF5.6T10	136A
1ZF5.6T20	136A
1ZF9.1T5	139A
1ZF9.1T10	139A
1ZF9.1T20	139A
1ZF12T5	142A
1ZF12T10	142A
1ZF12T20	142A
1ZF14T5	144A
1ZF14T10	144A
1ZF14T20	144A
1ZF15T5	145A
1ZF15T10	145A
1ZF15T20	145A
1ZF27T5	146A
1ZF27T10	146A
1ZF27T20	146A
1ZF33T5	147A
1ZF33T10	147A
1ZF33T20	147A
1ZM3.6T5	134A
1ZM3.6T10	134A
1ZM3.6T20	134A
1ZM5.1T5	135A
1ZM5.1T20	135A
1ZM5.1T10	135A
1ZM5.6T5	136A
1ZM5.6T10	136A
1ZM5.6T20	136A
1ZM6.2	137A
1ZM6.2T5	137A
1ZM6.2T10	137A
1ZM6.2T20	137A
1ZM7.5T20	138A
1ZM7.5T10	138A
1ZM9.1T5	139A
1ZM9.1T20	139A
1ZM9.1T10	139A
1ZM10T5	140A
1ZM10T10	140A
1ZM10T20	140A
1ZM12T5	142A
1ZM12T10	142A
1ZM12T20	142A
1ZM13T5	143A
1ZM13T10	143A
1ZM13T20	143A
1ZM15T5	145A
1ZM15T10	145A
1ZM15T20	145A
1ZM16T5	5075A
1ZM18T5	5077A
1ZM75T5	138A
1ZS13A	143A
1ZS16A	5075A
1ZS18A	5084A
1ZT12	142A
1ZT12B	142A
1ZT15	145A
1ZT15B	145A
1ZT27	146A
1ZT27B	146A
1ZT33	147A
1ZT33B	147A
1ZT82	150A
1ZT82B	150A
1ZT110A	151A
1ZT120A	5097A
1ZT130A	5098A
1ZT150A	5100A
1ZT160A	5101A
1ZT180A	5103A
1ZT200A	5105A
2.01.03.02	159
2.7B	5002A
2.7B2(ZENER)	5002A
2.7B3	5002A
2.7B3(ZENER)	5002A
2.7L1	5002A
2.4341.0018	121
2.V008M01	100
2.V0038H03	102
2(3395	123AP
2-00020-327F	5994
2-00037-955	121
2-00045-345	123AP
2-00045-424	123AP
2-0A90	110MP
2-0A99	109
2-1K60	177
2-1K261	109
2-1K261MP	110MP
2-1K261PAIR	110MP
2-5SR	116
2-5SR3	123AP
2-36	103
2-80	112
2-131	521
2-136	521
2-140	521
2-140-01	521
2-5004-6	5695
2-5004-14	5697
2-5184-11	5675
2-5232	199
2-8454-031	123AP
2-64701508	125
2-D2K	116
2-D2L	116
2-D2R	116
2-G-3055	130
2-0A90	110MP
2-0A90MEV	110MP
2-0A90MFV	110MP
2A	126
2A12	129
2A18	5008A
2A21	5010A
2A21(ZENER)	5010A
2A22	5010A
2A22(ZENER)	5010A
2A25	134A
2A25(ZENER)	5006A
2A28(ZENER)	5004A
2A30	156
2A43	5003A
2A44	5005A
2A45	5011A
2A46	5007A
2A47	5008A
2A50	519
2A64	5036A
2A100	156
2A119	110MP
2A200	156
2A400	125
2A500	125
2A600	125
2A800	125
2A1000	125
2AA113	116
2AA119	110MP
2AA119(MP)	110MP
2AC3T	5642
2AC3TL	5642
2AC3TR	5642
2AC5T	5643
2AC5TL	5643
2AC5TR	5643
2AC6TL	5643
2AC6TR	5643
2AC128	126
2AC187	176
2AC188	158
2AD140	121
2AD149	121MP
2AFR2PF	156
2AG	161
2AH	161
2AM-1	5455
2AT-16	503
2AV2	511
2AV6T	5643
2B	100
2B2DM	166
2B3-L	5312
2B4B41	5312
2B4DM	167
2B4E	5313
2B6DM	168
2B8DM	168
2B10DM	169
2B10MS	169
2B12DS	169
2B16DM	170
2B20DM	170
2B1202	105
2B5273	5683
2B-2	506
2B-2D10DE	506
2B-2DIODE	506
2BA2	511
2BC2229-0	399
2C	100
2C05	156
2C6	156
2C8	156
2C10	156
2C91G	101
2C291(TRANS)	128
2CD198S	130
2CN3	508
2CS537FC	199
2CS900	123AP
2CY30	194
2CY31	194
2CY32	194
2CY33	194
2CY34	194
2CY38	159
2CY39	159
2D	100
2D001	179
2D002	123A
2D002-41	123A
2D002-168	123A
2D002-169	123A
2D002-170	123A
2D002-171	123A
2D002-175	123A
2D004	121
2D004-9	104
2D010	130
2D020	194
2D020-173	194
2D020-174	194
2D030	6400
2D040	324
2D013	102
2D013-13	102
2D013-54	101
2D013-109	102
2D013-160	102
2D013-5109	100
2D015	104
2D016	102
2D016-45	102
2D016-54	102
2D017	129
2D017-165	129
2D017-166	129
2D017-167	129
2D017-168	129
2D017-169	129
2D021	100
2D021-8	100
2D021-11	100
2D021-56	100
2D022	6400A
2D022-211	6400A
2D023	102
2D026	123AP
2D026-274	123AP
2D027	159
2D031	133
2D033	199
2D036	158
2D038	313
2D039	102A
2D6-5-0834-1D214	1228
2D7A	5096A
2D7AM	5096A
2D41	5402
2D165	177
2D-02	116
2DG2	109
2DL15	506
2DL-15	506
2D021-56	158
2D023	158
2D030	6410
2D033	123AP
2D039	158
2DS24YD	124
2E	126
2E05	125
2E1	156
2E1A20A22AAB	128
2E2	156
2E4	156
2E6	156
2E8	156
2E10	156
2EM03	125
2EM05	125
2EM015	156
2EM6	156
2EM8	156
2EM10	156
2F	160
2F05	5800
2F2CN1	156
2F2CN5	156
2F4	116
2F5CN1	125
2F6	156
2F8	156
2F10	156
2FB600	5305
2FB800	5306
2FB1000	5307
2G	126
2G022	102
2G8	116
2G13	116
2G101	160
2G102	160
2G103	160
2G104	160
2G106	160
2G108	160
2G109	160
2G110	160
2G138	100
2G139	100
2G140	100
2G201	160
2G202	160
2G210	121
2G220	121
2G222	121
2G223	104
2G224	121
2G225	121
2G226	179
2G227	179
2G228	179
2G240	121
2G270	102
2G271	102
2G301	160
2G302	102
2G303	102A
2G304	102A
2G306	102
2G308	102A
2G309	102A
2G319	100
2G320	100
2G321	102
2G322	102
2G323	102
2G324	102
2G339	103
2G339A	103
2G344	126
2G345	160
2G371	102A
2G371A	102A
2G374	102A
2G374A	102A
2G376	102A
2G377	102A
2G381	102A
2G381A	102A
2G382	160
2G383	100
2G384	102
2G385	102
2G386	102
2G387	102
2G394	100
2G395	158
2G396	100
2G397	100
2G401	160
2G402	160
2G403	160
2G404	160
2G413	160
2G414	160
2G415	160
2G416	160
2G417	160
2G508	102
2G509	102
2G524	100
2G525	100
2G526	100
2G527	100
2G577	100
2G601	126
2G602	126
2G603	100
2G604	100
2G605	100
2G805	116
2G1024	100
2G1025	100
2G1026	100
2G1027	102
2G3055	130
2GA	116
2GL05	100
2GU026	100
2H1254	159
2H1255	159
2H1256	106
2H1257	106
2H1258	159
2H1259	159
2HR3J	125
2HR3M	125
2HT6	505
2HT16	504
2HT-2L	118
2HT-6	505
2HT-11C	503
2HT-11L	503
2HT-13C	503
2HT-13L	503
2HT-18C	505
2HT-20C	505
2ISD235-R	152
2J72	160
2J73	160
2J8138	116
2JMW828	176
2JMW961	123AP
2K02	125
2K19H	312
2K48	160
2KBP005	166
2KBP01	166
2KBP02	167
2KBP04	168
2KBP06	169
2KBP08	170
2KBP10	170
2L15	525
2M1127	102
2M6219	108
2MC	126
2MN6374	108
2MW665	109
2MW742	137A
2N0000	123A
2N2G374	102
2N2J324	128
2N2J374	192
2N15	102
2N21	153
2N22	153
2N23	102
2N24	102
2N25	102
2N26	102
2N27	100
2N28	101
2N29	101
2N30	100
2N31	100
2N32	102
2N32A	102
2N33	126
2N34	102A
2N34A	102A
2N35	103A
2N36	102A
2N37	102A
2N38	102A
2N38A	102A
2N39	102
2N40	102
2N41	102
2N42	102
2N43	102
2N43A	102
2N44	102
2N44A	102
2N45	102A
2N45A	102A
2N46	102
2N47	102
2N48	102
2N48A	102
2N49	102
2N50	102
2N51	102
2N52	102
2N53	102
2N54	102
2N55	102
2N56	102
2N57	104
2N58	102
2N59	102
2N59A	102
2N59B	102
2N59C	102
2N59D	102
2N60	102
2N60A	102
2N60B	102
2N60C	102
2N60R	102
2N61	102
2N61A	102
2N61B	102
2N61C	102
2N62	102A
2N63	102A
2N64	102A
2N65	102
2N66	104
2N67	104
2N68	104
2N71	102
2N72	126
2N73	102
2N74	102
2N75	126
2N76	102
2N77	102
2N78	103
2N78A	101
2N79	102
2N80	102
2N81	102
2N82	102
2N82AG	112
2N83	100
2N84	160
2N85	126
2N86	126
2N87	126
2N88	126
2N89	126
2N90	126
2N94	103A
2N94A	103A
2N95	176
2N96	102
2N97	101
2N97A	101
2N98	101
2N98A	101
2N99	101
2N100	101
2N102	101
2N103	101
2N104	102A
2N105	102A
2N106	102A
2N107	102A
2N108	102
2N109	102A
2N109/5	102
2N109BLU	102A
2N109GRN	102A
2N109M1	102A
2N109M2	102A
2N109WHT	102A
2N109YEL	102A
2N111	100
2N111A	100
2N111B	126
2N111M1	126
2N111M2	126
2N112	126
2N112A	100
2N112M1	126
2N113	100
2N114	100
2N115	121
2N117(T1)	194
2N118	123AP
2N118(T1)	194
2N118A	123AP
2N118A(T1)	194
2N119	123AP
2N119(T1)	194
2N120	123AP
2N120(T1)	194
2N122	198
2N123	100
2N123(GE)	102
2N123/5	160
2N123A	126
2N123A5	160
2N124	101
2N124(T1)	101
2N125	101
2N125(T1)	101
2N126	103A
2N126(T1)	101
2N127	101
2N128	126
2N129	126
2N130	102
2N130A	102
2N131	102
2N131A	102
2N132	102
2N132A	102
2N133	102
2N133A	102A
2N135	100
2N136	100
2N137	100
2N138	102A
2N138A	102A
2N138B	102A
2N139	126
2N140	126
2N140M1	126
2N140M2	126
2N141	121
2N143	121
2N145	101
2N146	101
2N147	101
2N148	103A
2N148A	103A
2N148B	103A
2N148C	123AP
2N148C/D	123AP
2N148D	123AP
2N149	103A
2N149A	103A
2N149B	158
2N150	101
2N150A	101
2N151	102
2N155	121
2N156	121
2N157	121
2N157A	121
2N158	121
2N158A	121
2N159	102
2N160	123AP
2N160A	123AP
2N161	123AP
2N161A	123AP
2N162	107
2N162A	107
2N163	123AP
2N163A	123AP
2N164	101
2N164A	101
2N165	101
2N166	101
2N167	101
2N167A	101
2N168	101
2N168A	101
2N169	101
2N169A	101
2N170	101
2N171	103
2N172	101
2N173	105
2N174	105
2N174A	105
2N174RED	105
2N175	102A
2N176	104
2N176(WHT/BRN)	121
2N176(WHT/GRN	121
2N176(WHT/RED)	121
2N176-1	104
2N176-1BLU	121
2N176-1WHT	121
2N176-1YEL	121
2N176-3PUR	121
2N176-4PUR	121
2N176-5WHT	121
2N176-6WHT	121
2N176A	104
2N176BLK	121
2N176BLU	121
2N176G	104
2N176GRN	121
2N176M	121
2N176PUR	121
2N176RED	121
2N176W	104
2N176WHT	121
2N176YEL	121
2N178	104
2N179	104
2N180	102A
2N181	102A
2N182	101
2N182#	101
2N183	101
2N183#	101
2N184	101
2N185	102A
2N185BLU	102A

PART NUMBER	NTE REPLACEMENT
2N186	102A
2N186A	102A
2N187	102A
2N187A	102
2N188	102
2N188A	102
2N189	102
2N189#	158
2N190	102
2N191	102
2N192	102
2N193	103A
2N194	103A
2N194A	103A
2N195	102
2N196	102
2N197	102
2N198	102
2N199	102
2N200	102
2N204	102
2N205	102
2N206	102
2N207	102
2N207A	102
2N207B	102
2N207BLU	102
2N211	103A
2N211M2	160
2N212	103A
2N213	103A
2N213A	103A
2N214	103A
2N214A	103
2N215	102A
2N216	103A
2N217	102A
2N217A	102A
2N217RED	102A
2N217WHT	102A
2N217YEL	102A
2N218	160
2N219	160
2N220	102A
2N222	102A
2N223	102A
2N224	102A
2N225	102A
2N226	102A
2N227	102A
2N228	103A
2N228A	158
2N229	103A
2N230	104
2N231	160
2N231-YEL-RED	126
2N231BLU	126
2N231RED	126
2N231YEL	126
2N232	160
2N233	103A
2N233A	103A
2N234	121
2N234A	121
2N235	121
2N235A	121
2N235B	121
2N236	121
2N236A	121
2N236B	121
2N237	102
2N238	102A
2N238-ORN	102A
2N238D	102A
2N238E	102A
2N238F	102A
2N240	160
2N240PN	712
2N241	102
2N241A	102
2N242	104
2N243	293
2N244	293
2N245	192
2N246	192
2N247	126
2N247/33	126
2N248	126
2N249	100
2N250	104
2N250A	104
2N251	121
2N251A	121
2N252	126
2N253	101
2N254	101
2N255	104
2N255A	104
2N256	104
2N256A	104
2N257	104
2N257-B	104
2N257-BLK	127
2N257-GRN	127
2N257-W	104
2N257-WHT	179
2N257A	104
2N257B	104
2N257G	104
2N257GRN	104
2N257W	104
2N262	100
2N263	123AP
2N264	123AP
2N265	158
2N266	102
2N267	160
2N268	121
2N268A	121
2N269	160
2N270	102
2N270-5E	102
2N270A	102
2N270SM	100
2N271	100
2N271A	100
2N272	102
2N273	100
2N274	160
2N274BLU	160
2N274WHT	160
2N275	126
2N275W	104
2N276	160
2N277	330
2N278	330
2N279	102A
2N280	102A
2N281	102A
2N282	102
2N283	102A
2N284	102A
2N284A	102A
2N285	104
2N285A	104
2N285B	104
2N286	160
2N289	160
2N290	104
2N291	102
2N292	101
2N292A	101
2N293	101
2N296	104
2N297	121
2N297A	121
2N299	160
2N300	160
2N301	121
2N301A	121
2N301B	121
2N301G	126
2N301W	121
2N302	100
2N303	102
2N306	103A
2N306A	103A
2N307	104
2N307A	121
2N307B	121
2N308	100
2N309	100
2N310	102
2N311	100
2N312	101
2N313	101
2N314	101
2N315	100
2N315A	100
2N315B	100
2N316	160
2N316A	102
2N317	100
2N317A	100
2N318	126
2N319	102
2N320	102A
2N321	102
2N322	102
2N323	102
2N324	102
2N325	104
2N327	129
2N327A	129
2N327B	129
2N328	129
2N328A	129
2N328B	129
2N329	129
2N329A	129
2N329B	129
2N330	129
2N330A	129
2N331	102
2N331M	102
2N332	123
2N332A	123
2N333	123
2N333A	123
2N334	123
2N334A	123
2N334B	123
2N335	123
2N335A	123
2N335B	123
2N336	123
2N336A	123
2N337	123
2N337A	123
2N338	123
2N338A	123
2N339	123
2N339A	123
2N3390-U29	123AP
2N340	154
2N340A	154
2N341	154
2N341A	154
2N342	192
2N342A	154
2N342B	128
2N343	192
2N343A	128
2N343B	192
2N344	126
2N345	126
2N346	126
2N350	121
2N350A	121
2N351	121
2N351A	121
2N352	121
2N353	121
2N355	194
2N356	101
2N356A	101
2N357	101
2N357A	101
2N358	101
2N358A	101
2N359	102
2N360	102
2N361	102
2N362	102
2N362B	102
2N363	102
2N364	103
2N365	103
2N366	103
2N367	102
2N368	102
2N369	102
2N370	126
2N370/33	126
2N370A	126
2N371	126
2N371/33	126
2N372	126
2N372/33	126
2N373	126
2N374	126
2N375	104
2N376	104
2N376A	104
2N377	101
2N377A	101
2N378	104
2N379	121
2N380	104
2N381	102
2N382	102
2N383	102
2N384	160
2N384/33	160
2N385	101
2N385/46	123AP
2N385A	101
2N386	104
2N387	104
2N388	101
2N388A	101
2N392	104
2N393	126
2N394	100
2N394A	100
2N395	100
2N396	100
2N396A	100
2N397	100
2N399	104
2N400	104
2N401	104
2N402	102
2N403	102
2N404	102
2N404A	102
2N405	102
2N406	102A
2N406BLU	102A
2N406BRN	102A
2N406GRN	102A
2N406GRN-YEL	102A
2N406ORN	102A
2N406RED	102A
2N407	102A
2N407BLK	102A
2N407GRN	102A
2N407J	102A
2N407RED	102A
2N407WHT	102A
2N407YEL	102A
2N408	102A
2N408J	102A
2N408WHT	102A
2N409	126
2N410	126
2N411	126
2N412	126
2N413	100
2N413A	100
2N414	100
2N414A	100
2N414B	100
2N414C	100
2N415	100
2N415A	100
2N416	100
2N417	100
2N418	121
2N419	104
2N420	121
2N420A	121
2N422	102
2N422/A	133
2N422A	102
2N425	102
2N425A	102
2N426	100
2N427	100
2N427A	102A
2N428	100
2N428A	100
2N431	123
2N432	123
2N433	123
2N435	158
2N438	101
2N438A	100
2N439	101
2N439A	100
2N440	101
2N440A	100
2N441	105
2N441BLU	105
2N442	105
2N443	105
2N444	101
2N444A	103
2N445	101
2N445A	101
2N446	101
2N446A	103
2N447	101
2N447A	103
2N447B	103
2N448	101
2N449	101
2N450	100
2N456	104
2N456A	104
2N456B	104
2N457	104
2N457A	104
2N457B	104
2N458	104
2N458A	104
2N458B	121
2N459	121
2N459A	121
2N460	102
2N461	102
2N462	102
2N464	102
2N465	102
2N466	102
2N467	102
2N468	102
2N469	158
2N470	123
2N471	123
2N471A	123
2N472	123
2N472A	123
2N473	123
2N473A	123
2N474	123
2N474A	123
2N475	123
2N475A	123
2N476	123
2N476A	107
2N477	123
2N477A	194
2N478	123
2N478A	194
2N479	123
2N479A	123
2N480	123
2N480A	123
2N480B	123
2N481	100
2N482	100
2N483	100
2N483-6M	102
2N483-B	100
2N483B	102
2N484	100
2N485	100
2N486	100
2N486B	100
2N487	102
2N489	6400A
2N489A	6400A
2N489B	6400A
2N490	6400A
2N490A	6400A
2N490B	6400A
2N491	6400A
2N491A	6400A
2N491B	6400A
2N492	6400A
2N492A	6400A
2N492B	6400A
2N493	6400A
2N493A	6400A
2N493B	6400A
2N494	6400A
2N494A	6400A
2N494B	6400A
2N495	106
2N495/18	106
2N496	106
2N497	128
2N497A	128
2N498	128
2N498A	198
2N499	126
2N499A	126
2N500	126
2N500BLU	126
2N500RED	126
2N500WHT	126
2N501	102A
2N501/18	126
2N501A	126
2N502	126
2N502A	126
2N502B	126
2N502BRN	160
2N502GRN	160
2N502RED	160
2N503	100
2N504	126
2N505	100
2N506	102A
2N507	103A
2N508	102
2N508A	102
2N509	160
2N511	104
2N511A	104
2N511B	104
2N512	104
2N512A	104
2N512B	104
2N513	104
2N513A	104
2N513B	104
2N514	121
2N514A	121
2N514B	121
2N515	103A
2N516	103A
2N517	103A
2N518	100
2N519	100
2N519A	100
2N520	100
2N520A	100
2N521	100
2N521A	100
2N522	100
2N522A	100
2N523	100
2N523A	100
2N524	102A
2N524A	102
2N525	102
2N525A	102
2N526	102
2N526A	102
2N527	102
2N527A	102
2N529	100
2N529/N	101
2N529/P	160
2N530	100
2N530/N	101
2N530/P	160
2N531	100
2N531/N	101
2N531/P	176
2N532	100
2N532/N	101
2N532/P	160
2N533	100
2N533/N	101
2N533/P	160
2N534	102A
2N535	102A
2N535A	102A
2N535B	102A
2N536	102A
2N537	160
2N538	121
2N538A	121
2N539	104
2N539A	104
2N540	104
2N540A	104
2N541	123
2N541A	123
2N542	123
2N542A	123
2N543	123
2N543A	123
2N544	126
2N544/33	126
2N545	192
2N546	123
2N547	123
2N548	123
2N549	123
2N550	123
2N551	123
2N552	123
2N553	121
2N554	121
2N555	121
2N556	101
2N557	101
2N558	101
2N559	160
2N560	123
2N561	121
2N563	102
2N564	102
2N565	102
2N566	102
2N567	103A
2N568	102
2N569	102
2N570	102
2N571	100
2N572	100
2N573	102
2N573BLU	102
2N573BRN	102
2N573ORN	102
2N573RED	102
2N574	105
2N574A	105
2N575	105
2N575A	105
2N576	101
2N576A	101
2N578	100
2N579	100
2N580	100
2N581	100
2N582	100
2N583	126
2N584	126
2N585	101
2N586	100
2N587	101
2N588	126
2N588A	126
2N589	121
2N591	102A
2N591-6M	126
2N591/5	102A
2N591A	102A
2N592	100
2N593	100
2N594	101
2N595	101
2N596	101
2N597	100
2N598	102
2N599	100
2N600	100
2N601	160
2N602	126
2N602A	126
2N603	126
2N603A	126
2N604	126
2N604A	126
2N605	126
2N606	126
2N607	126
2N608	126
2N609	102
2N610	102
2N611	102
2N612	196
2N613	102
2N614	100
2N615	100
2N616	100
2N617	100
2N618	104
2N619	123
2N620	123
2N621	123
2N622	123
2N623	126
2N624	126
2N625	103
2N627	121
2N628	121
2N629	121
2N630	179
2N631	102
2N632	102
2N633	102
2N633B	102
2N634	101
2N634A	101
2N635	101
2N635A	101
2N636	101
2N636A	101
2N637	104
2N637A	104
2N637B	104
2N638	104
2N638A	104
2N638B	104
2N639	104
2N639A	104
2N639B	104
2N640	126
2N641	126
2N641REDM/F	126
2N642	126
2N643	126
2N644	126
2N645	126
2N646	103
2N647	103A
2N647/22	103A
2N648	103
2N649	103A
2N649/5	103A
2N649/22	103
2N650	102
2N650A	102
2N651	102
2N651A	102
2N651BLA	102
2N652	102
2N652A	102
2N653	158
2N654	102
2N654(TAD)	158
2N655	102
2N655(TAD)	102
2N655A	128
2N655GRN	102
2N655RED	102
2N656	128
2N656A	128
2N656S	128
2N657	128
2N657A	128
2N657S	128
2N658	176
2N659	176
2N660	176
2N661	176
2N662	176
2N663	121
2N665	121
2N669	121
2N670	158
2N671	158
2N672	176
2N673	158
2N674	100
2N675	158
2N677	179
2N677A	179
2N677B	179
2N677C	121
2N678	179
2N678A	179
2N678B	121
2N678C	121
2N679	101
2N680	126
2N681	5520
2N682	5521
2N682A	5521
2N683	5522
2N683A	5522
2N684	5523
2N684A	5523
2N685	5524
2N686	5525
2N686A	5525
2N687	5526
2N687A	5526
2N688	5527
2N688A	5527
2N689	5528
2N689A	5528
2N690	5529
2N691	5530
2N692	5531
2N694	126
2N695	126
2N696	123
2N696A	123
2N696S	123
2N697	123
2N697A	128
2N697L	128
2N697S	128
2N698	128
2N699	128
2N699A	128
2N699A,B	154
2N699B	128
2N699L	128
2N699S	128
2N700	160
2N700/18	160
2N700A	160
2N700A/18	160
2N701	123
2N702	123A
2N703	123A
2N705	160
2N705A	160
2N706	123A
2N706/46	123AP
2N706/51	123AP
2N706/TNT	161
2N706A	123A
2N706A/46	123AP
2N706A/51	123AP
2N706A/TNT	161
2N706B	123A
2N706B/46	123AP
2N706B/51	123AP
2N706C	108-1
2N706M-JAN	192
2N707	108-1
2N707A	123
2N708	123A
2N708/46	123AP
2N708/51	229
2N708/TNT	107
2N708A	123A
2N709	108-1
2N709/46	192
2N709/51	192
2N709/52	108-1
2N709/TNT	107
2N709A	108-1
2N709A46	123AP
2N709A/51	192
2N710	160
2N710A	160
2N711	160
2N711A	160

PART NUMBER	NTE REPLACEMENT
2N711B	160
2N715	123
2N716	123A
2N717	123A
2N717A	123A
2N718	123A
2N718A	123A
2N719	194
2N719A	194
2N720	128
2N720A	194
2N721	159
2N721A	159
2N721AB	290
2N722	159
2N722A	159
2N722AB	159
2N723	106
2N725	160
2N726	106
2N727	106
2N728	123
2N729	123
2N730	123
2N731	123A
2N734	123A
2N734A	123A
2N735	123A
2N735A	123A
2N736	123A
2N736A	123A
2N736B	123A
2N738	154
2N738A	287
2N739	154
2N739A	154
2N740	154
2N740A	154
2N741	160
2N741A	160
2N742	123
2N742A	123
2N743	108-1
2N743/46	192
2N743/51	192
2N743A	108-1
2N744	108-1
2N744/46	192
2N744/51	192
2N744A	108-1
2N745	123AP
2N746	123AP
2N747	123AP
2N748	123AP
2N749	123AP
2N750	123AP
2N751	123AP
2N752	123A
2N753	123A
2N753/46	123AP
2N753/51	192
2N754	123AP
2N755	194
2N756	123A
2N756A	123
2N757	123A
2N757A	123A
2N757B	289
2N758	123A
2N758A	123
2N758B	123
2N759	123A
2N759A	123
2N759B	123
2N760	123A
2N760A	123A
2N760B	123
2N761	123A
2N762	123A
2N768	160
2N769	160
2N770	123
2N771	123
2N772	123
2N773	123
2N774	123
2N775	123
2N776	123
2N777	123
2N778	123
2N779	160
2N779A	160
2N779B	160
2N780	107
2N781	160
2N782	160
2N783	123AP
2N784	123AP
2N784/51	192
2N784A	123AP
2N784A46	123AP
2N784A/46	123AP
2N784A/51	123AP
2N789	123
2N790	123
2N791	123
2N792	123
2N793	123
2N794	160
2N795	160
2N796	160
2N797	103
2N799	102
2N800	102A
2N801	100
2N802	100
2N803	158
2N804	158
2N805	158
2N806	158
2N807	102A
2N808	102A
2N809	100
2N810	100
2N811	100
2N812	100
2N813	102A
2N814	102A
2N815	102A
2N816	102A
2N817	158
2N818	158
2N819	102A
2N820	102A
2N821	101
2N822	101
2N823	101
2N824	101
2N825	102
2N826	102
2N827	160
2N828	160
2N828A	160
2N829	160
2N834	123A
2N834/46	123AP
2N834/51	192
2N834A	123AP
2N835	123AP
2N835/46	123AP
2N835/51	192
2N837	160
2N838	160
2N839	123AP
2N840	123AP
2N841	123A
2N841/46	199
2N841/KVT	287
2N842	123AP
2N843	123A
2N844	123AP
2N845	194
2N846	160
2N846A	160
2N846B	160
2N849	108
2N850	108
2N851	108
2N852	108
2N858	159
2N858C	159
2N859	159
2N859D	159
2N860	159
2N860A	159
2N861	159
2N861A	159
2N862	159
2N862A	159
2N863	159
2N863A	159
2N864	106
2N864A	106
2N865	106
2N865A	106
2N866	123
2N867	123
2N869	106
2N869A	106
2N870	128
2N871	128
2N876	5400
2N877	5400
2N879	5402
2N880	5404
2N881	5404
2N885	5400
2N885A	5400
2N888A	5403
2N902	161
2N903	161
2N904	161
2N904AS	194
2N905	161
2N906	123AP
2N907	192
2N908	128
2N909	123
2N910	128
2N911	128
2N912	128
2N913	123A
2N914	123A
2N914/46	123AP
2N914/51	108-1
2N914A	123A
2N915	123A
2N915A	123A
2N916	123A
2N916A	123A
2N916B	123AP
2N917	161
2N917/46	229
2N917/51	107
2N917A	161
2N918	161
2N918/46	192
2N918/51	108-1
2N918A	161
2N919	123AP
2N920	123AP
2N921	123AP
2N922	123AP
2N923	159
2N923A	159
2N924	159
2N924A	159
2N925	159
2N925A	159
2N926	159
2N926A	159
2N927	159
2N927A	159
2N928	159
2N928A	159
2N929	123A
2N929/46	123AP
2N929A	123A
2N930	123A
2N930/46	123AP
2N930/KVT	287
2N930/TNT	123AP
2N930A	123A
2N930A/46	123AP
2N930B	123AP
2N933	126
2N934	160
2N935	159
2N935A	159
2N936	159
2N936A	159
2N937	159
2N937A	159
2N938	159
2N938A	159
2N939	159
2N939A	159
2N940	159
2N940A	159
2N941	159
2N941A	159
2N942	159
2N942A	288
2N943	159
2N943A	159
2N944	159
2N944A	159
2N945	159
2N945A	159
2N946	159
2N946A	159
2N947	123AP
2N951	123AP
2N955	101
2N955A	101
2N956	123A
2N956A	123A
2N957	123AP
2N958	123AP
2N959	123AP
2N960	160
2N960/46	160
2N961	160
2N961/46	160
2N962	160
2N962/46	160
2N963	160
2N964	126
2N964/46	160
2N964A	160
2N965	160
2N966	160
2N967	160
2N968	160
2N969	160
2N970	160
2N971	160
2N972	160
2N973	160
2N974	160
2N975	160
2N976	160
2N977	160
2N978	159
2N979	160
2N980	160
2N981	123A
2N982	160
2N983	160
2N984	160
2N985	160
2N986	126
2N987	160
2N988	108-1
2N989	108-1
2N990	160
2N991	160
2N992	160
2N993	160
2N994	160
2N995	106
2N995A	106
2N996	106
2N997	172A
2N998	172A
2N999	172A
2N1000	101
2N1003	126
2N1004	126
2N1005	108-1
2N1006	123AP
2N1007	104
2N1008	102
2N1008A	102
2N1008B	102
2N1009	102
2N1010	103A
2N1011	121
2N1012	101
2N1014	121
2N1017	160
2N1018	160
2N1020	121
2N1021	121
2N1021A	121
2N1022	121
2N1022A	121
2N1023	160
2N1024	129
2N1025	159
2N1025A	159
2N1025M	159
2N1026	159
2N1026A	159
2N1026AC	159
2N1027	159
2N1027A	159
2N1028	159
2N1028A	159
2N1029	121
2N1029A	121
2N1029B	121
2N1029C	121
2N1030	121
2N1030A	121
2N1030B	121
2N1030C	121
2N1031	121
2N1031A	121
2N1031B	121
2N1031C	121
2N1032	121
2N1032A	121
2N1032B	121
2N1032C	121
2N1033	121
2N1034	129
2N1035	129
2N1036	129
2N1037	129
2N1042	126
2N1043	126
2N1044	102
2N1045	102
2N1046	121
2N1046A	127
2N1046B	121
2N1047	152
2N1049	152
2N1050	198
2N1051	123AP
2N1052	154
2N1053	154
2N1054	154
2N1055	287
2N1056	102
2N1057	102
2N1058	103A
2N1059	103A
2N1059-1	103
2N1060	108-1
2N1065	160
2N1066	160
2N1067	186
2N1068	186
2N1069	130
2N1070	130
2N1072	130
2N1073	121
2N1073A	121
2N1073B	127
2N1078	103A
2N1081	123AP
2N1082	123AP
2N1084	194
2N1085	324
2N1086	101
2N1086A	101
2N1087	101
2N1090	101
2N1091	101
2N1092	128
2N1093	160
2N1094	160
2N1095	103
2N1096	103
2N1097	102
2N1098	102
2N1099	105
2N1100	105
2N1101	103A
2N1102	103A
2N1102/5	101
2N1103	123AP
2N1104	123
2N1105	194
2N1106	224
2N1107	126
2N1108	126
2N1108RED	126
2N1109	126
2N1110	126
2N1111	126
2N1111A	126
2N1111B	126
2N1111M1	126
2N1111RED	126
2N1112	101
2N1114	101
2N1115	160
2N1115A	160
2N1116	123AP
2N1117	123AP
2N1118	159
2N1118A	159
2N1118AB	159
2N1119	159
2N1119A	159
2N1120	121
2N1121	101
2N1122	160
2N1122A	160
2N1123	158
2N1124	102
2N1125	102
2N1126	102
2N1127	158
2N1128	102
2N1129	158
2N1130	102A
2N1131	129
2N1131/46	159
2N1131/51	159
2N1131A	129
2N1131A/51	159
2N1131AD	159
2N1131AS	129
2N1131S	129
2N1132	129
2N1132/46	159
2N1132/51	159
2N1132/TNT	159
2N1132A	129
2N1132A46	159
2N1132A/46	159
2N1132A/51	159
2N1132AC	159
2N1132B	159
2N1132B46	193
2N1132B/46	159
2N1132B/51	193
2N1135	159
2N1135A	159
2N1136	121
2N1136A	121
2N1136B	121
2N1136C	121
2N1137	121
2N1137A	121
2N1137B	127
2N1138	121
2N1138A	121
2N1138B	104
2N1139	123AP
2N1140	123AP
2N1141A	160
2N1142A	160
2N1143A	160
2N1144	160
2N1145	160
2N1146	104
2N1146A	104
2N1146B	104
2N1146C	104
2N1147	104
2N1147A	104
2N1147B	104
2N1147C	104
2N1149	123AP
2N1150	123AP
2N1150/904	123AP
2N1151	123AP
2N1151/904A	123AP
2N1152	123AP
2N1153	123AP
2N1153/910	123AP
2N1154	293
2N1154/951	293
2N1155	128
2N1155/952	293
2N1156	128
2N1156/953	128
2N1157	105
2N1157A	105
2N1158	160
2N1158A	160
2N1159	121
2N1160	121
2N1162	104
2N1162A	104
2N1163	121
2N1163A	121
2N1164	104
2N1164A	104
2N1165	104
2N1165A	121
2N1166	104
2N1166A	121
2N1167	127
2N1167A	127
2N1168	121
2N1169	103
2N1170	103
2N1171	100
2N1173	103A
2N1173W	103A
2N1174	102
2N1174W	176
2N1175	102
2N1175A	102
2N1176	100
2N1176A	100
2N1176B	100
2N1177	160
2N1178	160
2N1179	160
2N1180	126
2N1182	121
2N1183B	176
2N1184	176
2N1184A	176
2N1184B	176
2N1185	100
2N1186	100
2N1187	100
2N1188	100
2N1189	102
2N1190	102
2N1191	102
2N1192	102
2N1193	102
2N1194	102
2N1196	159
2N1197	129
2N1198	103
2N1199	123AP
2N1199A	123AP
2N1200	123AP
2N1201	123
2N1202	105
2N1203	105
2N1204	100
2N1204A	100
2N1205	123
2N1206	192
2N1207	154
2N1208	73
2N1209	73
2N1212	73
2N1213	126
2N1214	126
2N1215	126
2N1216	126
2N1217	103
2N1219	159
2N1220	159
2N1221	159
2N1222	159
2N1223	159
2N1224	126
2N1225	126
2N1226	126
2N1227	104
2N1227-3	104
2N1227-4	104
2N1227-4A	104
2N1227-4R	104
2N1227A	104
2N1228	129
2N1229	129
2N1230	129
2N1231	129
2N1232	129
2N1233	129
2N1234	129
2N1242	193
2N1243	193
2N1245	104
2N1246	104
2N1247	123
2N1248	123
2N1249	123
2N1251	103A
2N1252	128
2N1252A	224
2N1253	128
2N1253A	192
2N1254	129
2N1255	129
2N1256	129
2N1257	129
2N1258	129
2N1259	129
2N1261	105
2N1262	105
2N1263	105
2N1264	100
2N1265	102
2N1265/5	100
2N1265A	102
2N1266	102A
2N1267	123
2N1268	199
2N1269	199
2N1270	199
2N1271	199
2N1272	199
2N1273	102
2N1273BLU	102
2N1273GRN	102
2N1273ORN	102
2N1273RED	102
2N1273YEL	102
2N1274	102
2N1274BLU	102
2N1274BRN	102
2N1274GRN	102
2N1274ORN	102
2N1274PUR	102
2N1274RED	102
2N1274V10	176
2N1274VIO	176
2N1275	129
2N1276	123
2N1277	123
2N1278	123
2N1279	123
2N1280	100
2N1281	100
2N1282	160
2N1284	100
2N1285	160
2N1287	102
2N1287A	102
2N1288	101
2N1289	101
2N1290	100
2N1291	104
2N1293	121
2N1295	121
2N1297	121
2N1298	103A
2N1299	101
2N1300	160
2N1301	160
2N1302	101
2N1303	102A
2N1304	103
2N1305	102
2N1306	101
2N1307	102
2N1308	101
2N1309	100
2N1309A	102
2N1310	101
2N1311	101
2N1312	103
2N1313	126
2N1314	104
2N1314R	104
2N1315	176
2N1316	100
2N1317	100
2N1318	100
2N1319	100
2N1335	128
2N1336	128
2N1337	128
2N1338	123
2N1339	128
2N1340	128
2N1341	128
2N1342	194
2N1343	100
2N1344	100
2N1345	100
2N1346	100
2N1347	100
2N1348	102
2N1349	100
2N1350	100
2N1351	100
2N1352	102
2N1353	102
2N1354	100
2N1355	100
2N1356	100
2N1357	100
2N1358	105
2N1358A	105
2N1358M	105
2N1359	121
2N1360	121
2N1361	100
2N1361A	102
2N1362	121
2N1363	121
2N1364	121
2N1365	121
2N1366	101
2N1367	101
2N1370	102
2N1371	102
2N1372	102
2N1373	102
2N1374	102
2N1375	102A
2N1376	102
2N1377	102
2N1378	102
2N1379	102
2N1380	102
2N1381	102
2N1382	102
2N1383	102
2N1384	126
2N1385	160
2N1386	123
2N1387	123
2N1388	123
2N1389	123
2N1390	199
2N1391	103
2N1393	100
2N1394	160
2N1395	100
2N1396	126
2N1397	126
2N1398	126
2N1399	126
2N1400	126
2N1401	126
2N1401A	126
2N1402	126
2N1403	160
2N1404	102
2N1404A	160
2N1405	160

PART NUMBER	NTE REPLACEMENT
2N1406	160
2N1407	160
2N1408	160
2N1409	160
2N1409A	293
2N1410	160
2N1410A	293
2N1411	160
2N1412	105
2N1412A	213
2N1413	102
2N1414	102
2N1415	102
2N1416	102A
2N1417	123AP
2N1418	123AP
2N1419	104
2N1420	123
2N1420A	123
2N1422	130
2N1423	130
2N1425	126
2N1426	126
2N1427	126
2N1428	159
2N1429	129
2N1430	121
2N1431	103A
2N1432	102
2N1433	105
2N1434	105
2N1435	105
2N1436	160
2N1437	121
2N1438	121
2N1439	159
2N1440	159
2N1441	159
2N1442	159
2N1443	159
2N1444	192
2N1445	396
2N1446	102
2N1447	102
2N1448	102
2N1449	102
2N1450	102
2N1451	102
2N1452	102
2N1469	100
2N1470	100
2N1471	100
2N1472	128
2N1473	101
2N1474	159
2N1474A	159
2N1475	129
2N1478	102
2N1479	324
2N1480	324
2N1481	324
2N1482	324
2N1483	16007
2N1484	16007
2N1485	16007
2N1486	16007
2N1487	280
2N1488	280
2N1489	280
2N1490	130
2N1491	195A
2N1492	195A
2N1493	154
2N1494	160
2N1495	160
2N1499	126
2N1499A	126
2N1499B	126
2N1500	126
2N1500/18	160
2N1501	104
2N1502	104
2N1505	123
2N1506	123
2N1506A	123
2N1507	128
2N1508	128
2N1509	128
2N1510	101
2N1515	160
2N1516	160
2N1517	160
2N1517A	160
2N1518	28
2N1519	213
2N1520	28
2N1521	213
2N1522	28
2N1524	160
2N1524-1	160
2N1524-2	160
2N1524/33	160
2N1525	160
2N1526	126
2N1526/33	160
2N1527	160
2N1528	123AP
2N1529	121
2N1529A	121
2N1530	121
2N1530A	121
2N1531	121
2N1531A	121
2N1532	121
2N1533	121
2N1534	121
2N1534A	121
2N1535	121
2N1535A	121
2N1535B	121
2N1536	121
2N1536A	121
2N1537	121
2N1537A	121
2N1538	121
2N1538A	121
2N1539	121
2N1539A	121
2N1540	121
2N1540A	121
2N1541	121
2N1541A	121
2N1542	121
2N1542A	121
2N1543	121
2N1543A	121
2N1544	121
2N1544A	121
2N1545	121
2N1545A	121
2N1546	121
2N1546A	121
2N1547	121
2N1547A	121
2N1548	121
2N1548A	121
2N1549	121
2N1549A	121
2N1550	121
2N1550A	121
2N1551	121
2N1551A	121
2N1552	121
2N1552A	121
2N1553	121
2N1553A	121
2N1554	121
2N1554A	121
2N1555	121
2N1555A	121
2N1556	121
2N1556A	121
2N1557	121
2N1557A	121
2N1558	121
2N1558A	121
2N1559	121
2N1559A	121
2N1560	179
2N1560A	121
2N1561	160
2N1562	160
2N1564	128
2N1565	128
2N1566	128
2N1566A	123
2N1567	105
2N1568	105
2N1569	105
2N1570	100
2N1572	128
2N1573	128
2N1574	154
2N1581	100
2N1583	100
2N1584	100
2N1585	101
2N1586	107
2N1587	123AP
2N1588	123AP
2N1589	107
2N1590	123AP
2N1591	123AP
2N1592	107
2N1593	123AP
2N1594	123AP
2N1595	5408
2N1596	5408
2N1597	5408
2N1598	5409
2N1599	5409
2N1600	5470
2N1601	5471
2N1602	5472
2N1603	5473
2N1604	5474
2N1605	101
2N1605-A	103
2N1605A	101
2N1606	129
2N1607	159
2N1608	159
2N1613	128
2N1613/46	123AP
2N1613A	128
2N1613B	154
2N1613L	128
2N1613S	128
2N1614	158
2N1615	287
2N1616	73
2N1616A	73
2N1617	73
2N1617A	73
2N1618	73
2N1618A	73
2N1622	101
2N1623	129
2N1624	101
2N1625	160
2N1631	126
2N1632	126
2N1633	160
2N1634	160
2N1635	126
2N1636	126
2N1637	126
2N1637/33	160
2N1638	160
2N1638/33	126
2N1639	160
2N1639/33	160
2N1643	159
2N1644	123AP
2N1644A	123AP
2N1646	160
2N1647	75
2N1648	75
2N1649	75
2N1650	75
2N1651	179
2N1652	121
2N1653	121
2N1654	194
2N1655	194
2N1656	194
2N1662	126
2N1663	123AP
2N1664	100
2N1665	160
2N1666	121
2N1667	121
2N1668	104
2N1669	104
2N1670	160
2N1671	6400A
2N1671A	6400A
2N1671B	6400A
2N1671C	6400A
2N1672	103A
2N1672A	103A
2N1673	102A
2N1674	123AP
2N1676	159
2N1677	159
2N1678	160
2N1679	224
2N1680	192
2N1681	102A
2N1682	123
2N1683	100
2N1684	100
2N1685	101
2N1691	198
2N1694	101
2N1699	126
2N1700	128
2N1701	152
2N1702	130
2N1703	130
2N1704	123AP
2N1705	102
2N1706	102
2N1707	102
2N1708	123AP
2N1708A	123AP
2N1709	152
2N1710	186
2N1711	128
2N1711/46	123AP
2N1711/TNT	194
2N1711A	128
2N1711B	128
2N1711L	128
2N1711S	128
2N1713	160
2N1716	128
2N1720	128
2N1722	182
2N1724	73
2N1724A	73
2N1725	73
2N1726	160
2N1727	160
2N1728	160
2N1729	100
2N1730	101
2N1731	100
2N1732	101
2N1742	160
2N1743	377
2N1744	100
2N1745	160
2N1746	160
2N1747	160
2N1748	160
2N1748A	160
2N1749	160
2N1750	160
2N1751	179
2N1752	160
2N1753	160
2N1754	160
2N1755	104
2N1756	104
2N1757	104
2N1758	104
2N1759	104
2N1760	104
2N1761	104
2N1762	104
2N1763	123
2N1764	128
2N1768	152
2N1769	152
2N1770	5480
2N1770A	5480
2N1771	5481
2N1771A	5481
2N1772	5482
2N1772A	5482
2N1773	5483
2N1773A	5483
2N1774	5483
2N1774A	5483
2N1775	5484
2N1775A	5484
2N1776	5484
2N1776A	5484
2N1776B	5484
2N1777	5485
2N1777A	5485
2N1778A	5486
2N1779	101
2N1780	101
2N1781	101
2N1782	160
2N1783	101
2N1784	160
2N1785	160
2N1786	160
2N1787	160
2N1788	160
2N1789	160
2N1790	160
2N1792	5575
2N1793	5575
2N1794	5575
2N1795	5575
2N1797	5577
2N1798	5577
2N1799	5577
2N1800	5577
2N1805	5572
2N1806	5572
2N1808	101
2N1837	123AP
2N1837A	224
2N1837B	224
2N1838	123AP
2N1839	123AP
2N1839A	224
2N1840	123AP
2N1842	5501
2N1842A	5501
2N1842B	5545
2N1843	5501
2N1843A	5501
2N1843AX	5501
2N1843B	5501
2N1843X	5501
2N1844	5502
2N1844A	5502
2N1844AX	5502
2N1844B	5502
2N1844X	5502
2N1845	5504
2N1845A	5504
2N1845B	5504
2N1846	5504
2N1846A	5504
2N1846AX	5504
2N1846B	5504
2N1846X	5504
2N1847	5505
2N1847A	5505
2N1847B	5505
2N1848	5506
2N1848A	5506
2N1848AX	5506
2N1848B	5506
2N1848X	5506
2N1849	5507
2N1849A	5507
2N1849AX	5507
2N1849B	5507
2N1849X	5507
2N1850	5508
2N1850A	5508
2N1850AX	5508
2N1850B	5508
2N1850X	5508
2N1853	100
2N1853/18	160
2N1854	102
2N1858	103
2N1864	160
2N1865	160
2N1866	160
2N1867	160
2N1868	160
2N1872	160
2N1873	160
2N1874	160
2N1875	160
2N1886	152
2N1889	128
2N1890	128
2N1890S	128
2N1891	101
2N1892	101
2N1893	128
2N1893/46	194
2N1893A	128
2N1905	121
2N1906	179
2N1907	179
2N1907A	179
2N1908	179
2N1908A	179
2N1909	5570
2N1910	5570
2N1911	5570
2N1912	5570
2N1913	5570
2N1914	5572
2N1915	5572
2N1916	5572
2N1917	288
2N1918	288
2N1919	159
2N1920	159
2N1921	159
2N1922	129
2N1923	194
2N1929	5400
2N1940	100
2N1941	128
2N1943	128
2N1944	123AP
2N1945	123AP
2N1946	123AP
2N1947	123AP
2N1948	123AP
2N1949	123AP
2N1950	123AP
2N1951	123AP
2N1952	123AP
2N1953	123AP
2N1954	102A
2N1955	102A
2N1956	102A
2N1957	102A
2N1958	128
2N1958/18	194
2N1958A	128
2N1958A/51	293
2N1959	128
2N1959/18	194
2N1959A	128
2N1959A/51	293
2N1960	160
2N1960/46	160
2N1961	160
2N1961/46	102
2N1962	123AP
2N1962/46	192
2N1963	123AP
2N1963/46	123AP
2N1964	123AP
2N1964/46	192
2N1965	123AP
2N1965/46	192
2N1969	102A
2N1970	105
2N1971	121
2N1972	123AP
2N1973	128
2N1974	128
2N1975	128
2N1980	105
2N1981	105
2N1982	105
2N1983	123AP
2N1984	128
2N1985	128
2N1986	128
2N1987	128
2N1988	128
2N1989	128
2N1990	128
2N1990/46	287
2N1990R	194
2N1990S	287
2N1990W	287
2N1991	129
2N1991S	129
2N1992	123AP
2N1993	101
2N1994	101
2N1995	101
2N1996	101
2N1997	100
2N1998	100
2N1999	160
2N2000	102A
2N2001	102A
2N2002	159
2N2003	159
2N2004	159
2N2005	159
2N2006	159
2N2007	159
2N2008	194
2N2009	160
2N2017	128
2N2022	160
2N2033	152
2N2034	152
2N2035	152
2N2036	152
2N2038	123AP
2N2039	123AP
2N2040	123AP
2N2041	123AP
2N2048	160
2N2048A	160
2N2049	123AP
2N2059	160
2N2060	81
2N2060A	81
2N2061	104
2N2061A	121
2N2062	104
2N2062A	104
2N2063	104
2N2063A	104
2N2064	104
2N2064A	104
2N2065	104
2N2065A	104
2N2066	104
2N2066A	104
2N2067	104
2N2067B	104
2N2067G	104
2N2067W	104
2N2069	104
2N2070	104
2N2071	121
2N2072	121
2N2075	105
2N2075A	105
2N2076	105
2N2076A	105
2N2077	105
2N2077A	105
2N2078	105
2N2078A	105
2N2079	105
2N2079A	105
2N2080	105
2N2080A	105
2N2081	105
2N2081A	105
2N2082	105
2N2082A	105
2N2083	160
2N2084	160
2N2085	101
2N2086	128
2N2087	123AP
2N2089	126
2N2090	126
2N2091	160
2N2092	126
2N2093	160
2N2094	123AP
2N2094A	123AP
2N2095	123AP
2N2095A	123AP
2N2096	123AP
2N2096A	123AP
2N2097	160
2N2097A	123AP
2N2098	160
2N2099	160
2N2100	160
2N2100A	158
2N2102	128
2N2102A	128
2N2102L	128
2N2102S	128
2N2104	159
2N2105	159
2N2106	128
2N2107	128
2N2108	128
2N2121	159
2N2137	104
2N2137A	104
2N2138	104
2N2138A	104
2N2139	104
2N2139A	104
2N2140	104
2N2140A	104
2N2141	104
2N2141A	104
2N2142	104
2N2142A	104
2N2143	104
2N2143A	104
2N2144	104
2N2144A	104
2N2145	104
2N2145A	104
2N2146	104
2N2146A	104
2N2147	121
2N2148	121
2N2150	75
2N2151	75
2N2152	213
2N2152A	213
2N2153	213
2N2153A	213
2N2154	213
2N2154A	213
2N2155	105
2N2155A	105
2N2156	213
2N2156A	213
2N2157	213
2N2157A	213
2N2158	213
2N2158A	213
2N2159	105
2N2159A	105
2N2160	6400A
2N2161	123AP
2N2162	159
2N2163	159
2N2164	159
2N2165	159
2N2166	159
2N2167	159
2N2168	160
2N2169	5487
2N2170	160
2N2171	100
2N2172	100
2N2173	102A
2N2175	106
2N2176	106
2N2177	106
2N2178	159
2N2180	126
2N2181	159
2N2182	159
2N2183	159
2N2184	159
2N2185	159
2N2186	159
2N2187	159
2N2188	160
2N2189	160
2N2190	160
2N2191	160
2N2192	128
2N2192A	128
2N2192B	128
2N2193	128
2N2193A	128
2N2193B	128
2N2194	128
2N2194A	128
2N2194B	128
2N2195	128
2N2195A	128
2N2195B	128
2N2196	224
2N2197	128
2N2198	123
2N2199	160
2N2200	160
2N2204	124
2N2205	123AP
2N2206	123AP
2N2207	126
2N2208	160
2N2209	100
2N2210	105
2N2212	121
2N2214	123
2N2216	171
2N2217	123
2N2217/51	123AP
2N2217A	123
2N2218	123
2N2218/51	123AP
2N2218/TNT	123AP
2N2218A	123
2N2218AS	123A
2N2218S	123A
2N2219	123
2N2219/51	123AP
2N2219/TNT	123AP
2N2219A	123
2N2219AS	123A
2N2219S	123A
2N2220	123A
2N2220A	123A
2N2221	123A
2N2221A	123A
2N2222	123A
2N2222A	123A
2N2222AJAN	123A
2N2222B	123A
2N2223	81
2N2223A	81
2N2224	293
2N2225	160
2N2234	123
2N2235	123
2N2236	123AP
2N2237	123AP
2N2238	160
2N2239	192
2N2240	123AP
2N2241	123AP
2N2242	123AP
2N2243	128
2N2243A	128
2N2244	123AP
2N2245	123AP
2N2246	123AP
2N2247	123AP
2N2248	123AP
2N2249	123AP
2N2250	123AP
2N2251	123AP
2N2252	123AP
2N2253	123AP
2N2254	123AP
2N2255	123AP
2N2256	123AP
2N2257	123AP
2N2258	160
2N2259	160
2N2266	105
2N2267	105
2N2268	105
2N2269	105
2N2270	128
2N2270L	128
2N2270S	128
2N2271	102

PART NUMBER	NTE REPLACEMENT
2N2272	123AP
2N2273	126
2N2274	159
2N2275	159
2N2276	159
2N2277	159
2N2278	159
2N2279	159
2N2279/51	192
2N2280	159
2N2281	159
2N2285	179
2N2286	179
2N2287	121
2N2288	121
2N2289	104
2N2290	127
2N2291	121
2N2292	121
2N2293	121
2N2294	121
2N2295	121
2N2296	121
2N2297	128
2N2297/51	123AP
2N2297S	128
2N2299	159
2N2303	129
2N2303/46	159
2N2303/TNT	159
2N2305	130
2N2309	123AP
2N2310	123AP
2N2311	287
2N2312	123AP
2N2313	287
2N2314	123AP
2N2315	123AP
2N2316	287
2N2317	123AP
2N2318	123AP
2N2319	123AP
2N2320	123AP
2N2327	5456
2N2328	5456
2N2329	5457
2N2330	123
2N2330S	293
2N2331	123AP
2N2331S	123A
2N2332	159
2N2333	159
2N2334	159
2N2335	159
2N2336	159
2N2337	159
2N2339	152
2N2340	237
2N2341	237
2N2342	132
2N2343	132
2N2344	5408
2N2345	5408
2N2346	5408
2N2347	5408
2N2348	5408
2N2349	123AP
2N2350	293
2N2350A	293
2N2351	128
2N2351A	224
2N2352	293
2N2352A	293
2N2353	123AP
2N2353A	123AP
2N2354	103
2N2356A	287
2N2357	121
2N2358	121
2N2360	160
2N2361	160
2N2362	160
2N2363	126
2N2364	287
2N2364A	287
2N2368	123A
2N2368/51	192
2N2368A	123AP
2N2369	123A
2N2369/51	192
2N2369A	123A
2N2370	159
2N2371	159
2N2372	159
2N2373	159
2N2374	102
2N2375	102
2N2376	102
2N2377	159
2N2378	159
2N2379	105
2N2380	123AP
2N2380A	123AP
2N2381	160
2N2382	160
2N2383	130
2N2384	130
2N2385	131
2N2387	123AP
2N2388	123AP
2N2389	123
2N2390	123
2N2391	194
2N2392	194

PART NUMBER	NTE REPLACEMENT
2N2393	159
2N2394	159
2N2396	123
2N2397	123
2N2398	160
2N2399	160
2N2400	160
2N2401	160
2N2402	160
2N2403	192
2N2404	192
2N2406	176
2N2410	293
2N2410/51	293
2N2411	159
2N2412	159
2N2413	123AP
2N2414	297
2N2415	160
2N2416	160
2N2417	123AP
2N2423	121
2N2424	159
2N2425	159
2N2426	101
2N2427	123AP
2N2428	102A
2N2429	102A
2N2429/353	102
2N2430	103A
2N2431	158
2N2431B	102
2N2432A	199
2N2433	171
2N2435	171
2N2437	171
2N2438	171
2N2439	171
2N2443	128
2N2446	121
2N2447	102A
2N2448	102A
2N2449	102A
2N2450	102A
2N2451	126
2N2453	81
2N2453A	81
2N2454	5474
2N2455	160
2N2456	126
2N2459	194
2N2460	224
2N2461	224
2N2463	171
2N2464	224
2N2465	224
2N2466	123AP
2N2468	102
2N2469	102
2N2472	123AP
2N2473	123AP
2N2474	159
2N2475	229
2N2475/46	229
2N2475/51	229
2N2476	123AP
2N2477	123AP
2N2478	128
2N2479	123AP
2N2480	81
2N2480A	81
2N2481	123AP
2N2482	103
2N2483	123A
2N2484	123A
2N2484A	192
2N2487	126
2N2488	126
2N2489	126
2N2490	105
2N2491	105
2N2492	105
2N2493	105
2N2494	126
2N2495	160
2N2496	160
2N2497	326
2N2501	123A
2N2504	123A
2N2509	123A
2N2510	123A
2N2511	123A
2N2512	160
2N2514	123AP
2N2515	123AP
2N2516	194
2N2517	287
2N2518	194
2N2519	194
2N2520	123AP
2N2521	123AP
2N2522	123AP
2N2523	123AP
2N2524	123AP
2N2526	127
2N2527	127
2N2528	127
2N2529	123AP
2N2530	123AP
2N2531	123AP
2N2532	123AP
2N2533	123AP
2N2534	123AP
2N2537	123

PART NUMBER	NTE REPLACEMENT
2N2538	123
2N2539	123A
2N2540	123A
2N2540A	195A
2N2541	176
2N2551	288
2N2564/5	176
2N2569	123AP
2N2570	123AP
2N2571	123AP
2N2572	123AP
2N2586	123A
2N2587	160
2N2588	126
2N2590	288
2N2591	159
2N2592	159
2N2593	159
2N2594	128
2N2595	159
2N2596	159
2N2597	159
2N2598	288
2N2599	288
2N2599A	288
2N2600	288
2N2601	159
2N2602	159
2N2603	159
2N2604	159
2N2605	159
2N2605A	159
2N2608(SGD)	326
2N2610	123AP
2N2611	190
2N2612	104
2N2613	102A
2N2614	102A
2N2615	229
2N2616	108-1
2N2617	123AP
2N2618	154
2N2618/46	123AP
2N2619	5476
2N2621	160
2N2622	160
2N2623	160
2N2624	160
2N2625	160
2N2626	160
2N2627	160
2N2628	160
2N2629	160
2N2630	160
2N2632	74
2N2633	74
2N2635	160
2N2636	179
2N2637	179
2N2638	179
2N2639	81
2N2640	81
2N2641	81
2N2642	81
2N2643	81
2N2644	81
2N2645	123A
2N2646	6401
2N2647	6409
2N2648	176
2N2651	123A
2N2653	5474
2N2654	160
2N2655	224
2N2656	123AP
2N2657	152
2N2671	160
2N2672	160
2N2672A	160
2N2672BLK	160
2N2672GRN	160
2N2673	123AP
2N2674	123AP
2N2675	123AP
2N2676	123AP
2N2677	123AP
2N2678	123AP
2N2679	5400
2N2680	5401
2N2680A	5401
2N2687	5400
2N2689	121
2N2690	5404
2N2691	179
2N2691A	179
2N2692	123AP
2N2693	123AP
2N2694	199
2N2695	159
2N2696	159
2N2699	101
2N2706	158
2N2707	158
2N2708	316
2N2709	159
2N2710	107
2N2711	107
2N2712	85
2N2712BLUE	199
2N2713	85
2N2714	85
2N2715	107
2N2716	107
2N2717	160

PART NUMBER	NTE REPLACEMENT
2N2719	123AP
2N2720	81
2N2721	81
2N2722	81
2N2724	265
2N2726	154
2N2728	28
2N2729	108-1
2N2730	28
2N2731	28
2N2732	28
2N2783	126
2N2784	108-1
2N2784/46	161
2N2784/52	108-1
2N2784/TNT	123AP
2N2786	160
2N2786A	160
2N2787	123AP
2N2788	128
2N2789	128
2N2790	123AP
2N2791	123AP
2N2792	123AP
2N2793	28
2N2795	160
2N2796	160
2N2797	160
2N2798	160
2N2799	160
2N2800	129
2N2800/46	159
2N2800/51	159
2N2800S	129
2N2801	129
2N2801/46	294
2N2801/51	159
2N2802	82
2N2803	82
2N2804	82
2N2805	82
2N2806	82
2N2807	82
2N2808	123AP
2N2808A	123AP
2N2809	161
2N2809A	123AP
2N2810	161
2N2810A	123AP
2N2811	73
2N2812	73
2N2813	73
2N2814	73
2N2815	71
2N2816	71
2N2817	71
2N2819	70
2N2820	70
2N2821	70
2N2823	70
2N2824	70
2N2825	70
2N2828	152
2N2829	152
2N2831	123AP
2N2832	121
2N2832(AUDIO)	179
2N2835	131
2N2836	121
2N2837	159
2N2838	159
2N2840	6400
2N2845	123AP
2N2846	128
2N2847	123AP
2N2848	128
2N2849	128
2N2850	128
2N2851	128
2N2852	128
2N2853	128
2N2853-1	210
2N2854	128
2N2854-1	210
2N2855	128
2N2855-1	210
2N2856	128
2N2856-1	210
2N2857	316
2N2860	160
2N2861	159
2N2862	159
2N2863	293
2N2864	293
2N2865	161
2N2868	123
2N2869	104
2N2870	121
2N2873	160
2N2874	224
2N2875	153
2N2877	75
2N2878	75
2N2879	75
2N2880	75
2N2883	123
2N2884	123
2N2885	199
2N2886	293
2N2888	5524
2N2889	5525
2N2890	128
2N2891	128
2N2892	74

PART NUMBER	NTE REPLACEMENT
2N2893	74
2N2894	106
2N2894A	106
2N2895	128
2N2896	128
2N2897	128
2N2898	396
2N2899	396
2N2900	293
2N2901	107
2N2903	81
2N2903A	81
2N2904	129
2N2904/TNT	159
2N2904A	129
2N2904AS	159
2N2904S	159
2N2905	129
2N2905A	129
2N2905AS	159
2N2905S	159
2N2906	159M
2N2906A	159M
2N2907	159M
2N2907A	159M
2N2909	171
2N2910	123AP
2N2913	81
2N2914	81
2N2915	81
2N2915A	81
2N2916	81
2N2916A	81
2N2917	81
2N2918	81
2N2918A	81
2N2919A	81
2N2920A	81
2N2921	107
2N2922	107
2N2923	85
2N2924	85
2N2924-18	123A
2N2925	199
2N2926	85
2N2926-6	85
2N2926-B	161
2N2926-BRN	199
2N2926-G	85
2N2926-GRN	199
2N2926-O	161
2N2926-ORG	199
2N2926-R	161
2N2926-RED	199
2N2926-Y	85
2N2926-YEL	199
2N2926G	85
2N2926GRN	85
2N2926O	192
2N2926ORN	85
2N2926R	192
2N2926Y	85
2N2927	129
2N2927/46	159
2N2927/51	159
2N2928	160
2N2929	160
2N2930	100
2N2931	123AP
2N2932	123AP
2N2933	123AP
2N2934	123AP
2N2935	123AP
2N2936	123AP
2N2937	123AP
2N2938	123AP
2N2940	396
2N2941	396
2N2942	160
2N2943	160
2N2944	159
2N2944A	159
2N2945	159
2N2945A	159
2N2946	159
2N2946A	159
2N2947	152
2N2948	130
2N2949	195A
2N2950	235
2N2951	123AP
2N2952	123AP
2N2953	102
2N2954	123AP
2N2955	160
2N2956	160
2N2957	160
2N2958	123
2N2959	123
2N2959S	123A
2N2960	123AP
2N2961	123AP
2N2966	100
2N2967	161
2N2968	129
2N2968A	133
2N2969	159
2N2970	129
2N2971	159
2N2972	81
2N2973	81
2N2974	81
2N2975	81
2N2976	81

PART NUMBER	NTE REPLACEMENT
2N2977	81
2N2978	81
2N2979	81
2N2987	198
2N2988	198
2N2989	198
2N2990	198
2N2995	224
2N2996	160
2N2997	160
2N2998	160
2N2999	160
2N3001	5400
2N3009	123A
2N3010	108-1
2N3011	123A
2N3012	106
2N3013	123A
2N3014	123A
2N3015	123
2N3016	210
2N3017	210
2N3019	128
2N3019S	128
2N3020	219
2N3020S	128
2N3021	219
2N3022	219
2N3023	219
2N3024	219
2N3025	219
2N3026	219
2N3027	5400
2N3028	5401
2N3029	5402
2N3030	5400
2N3031	5401
2N3032	5402
2N3033	194
2N3034	194
2N3036	128
2N3037	287
2N3038	128
2N3039	159
2N3040	159
2N3052	192
2N3053	128
2N3053/4053	224
2N3053/40053	192
2N3053A	128
2N3053S	128
2N3054	175
2N3054A	175
2N3055	130
2N3055-1	130
2N3055-2	130
2N3055-3	181
2N3055-4	130
2N3055-5	130
2N3055-6	181
2N3055-7	181
2N3055-8	181
2N3055-9	130
2N3055-10	130
2N3055A	130
2N3055AH	130
2N3055H	130
2N3055S	130
2N3055SD	130
2N3055UB	130
2N3056	396
2N3056A	396
2N3057	128
2N3057A	396
2N3058	159
2N3059	159
2N3060	159
2N3061	159
2N3062	159
2N3063	288
2N3064	288
2N3065	288
2N3066	133
2N3067	133
2N3068	133
2N3069	133
2N3070	133
2N3071	133
2N3072	129
2N3073	159
2N3074	160
2N3075	100
2N3077	128
2N3078	128
2N3081	159
2N3081/46	193
2N3082	107
2N3083	107
2N3084	133
2N3085	133
2N3086	133
2N3087	133
2N3088	133
2N3088A	133
2N3089	133
2N3089A	133
2N3107	128
2N3108	128
2N3109	128
2N3110	128
2N3110S	128
2N3114	154
2N3114S	154
2N3115	123A

PART NUMBER	NTE REPLACEMENT
2N3116	123A
2N3117	199
2N3118	128
2N3119	171
2N3120	129
2N3121	159
2N3122	123AP
2N3124	179
2N3125	121
2N3126	121
2N3127	160
2N3128	123AP
2N3129	123AP
2N3130	123AP
2N3131	161
2N3132	121
2N3133	129
2N3133S	154
2N3134	129
2N3135	159
2N3136	159
2N3137	123
2N3138	152
2N3140	152
2N3142	152
2N3144	152
2N3146	121
2N3147	121
2N3148	160
2N3153	160
2N3171	180
2N3172	180
2N3173	180
2N3174	180
2N3183	180
2N3184	180
2N3185	180
2N3186	180
2N3195	180
2N3196	180
2N3197	180
2N3198	180
2N3199	153
2N3200	153
2N3202	129
2N3203	129
2N3205	153
2N3206	153
2N3208	129
2N3209	106
2N3210	123AP
2N3211	123AP
2N3216	160
2N3217	159
2N3218	159
2N3219	159
2N3224	129
2N3225	189
2N3226	130
2N3227	123A
2N3228	5511
2N3229	152
2N3232	130
2N3233	130
2N3234	130
2N3235	130
2N3236	181
2N3237	181
2N3238	181
2N3239	181
2N3241	123A
2N3241A	123A
2N3242	123A
2N3242A	123A
2N3244	129
2N3244S	129
2N3245	129
2N3245S	129
2N3246	123A
2N3247	123AP
2N3248	106
2N3249	106
2N3250	159
2N3250A	159
2N3251	159
2N3251A	159
2N3252	154
2N3252S	224
2N3253	154
2N3253S	224
2N3254	224
2N3259	5401
2N3261	123AP
2N3262	128
2N3265	71
2N3266	71
2N3267	160
2N3268	123
2N3279	160
2N3280	160
2N3281	160
2N3282	160
2N3283	160
2N3284	160
2N3285	160
2N3286	160
2N3287	161
2N3288	161
2N3289	161
2N3290	161
2N3291	161
2N3292	161
2N3293	161
2N3294	161

PART NUMBER	NTE REPLACEMENT
2N3295	192
2N3296	186
2N3297	130
2N3298	123AP
2N3299	123
2N3299S	123
2N3300	123
2N3300S	123
2N3301	123A
2N3302	123A
2N3304	106
2N3305	159
2N3306	159
2N3307	159
2N3308	159
2N3309	235
2N3310	123
2N3311	105
2N3312	105
2N3313	105
2N3314	105
2N3315	105
2N3316	105
2N3317	159
2N3318	159
2N3319	159
2N3320	160
2N3321	160
2N3322	160
2N3323	160
2N3324	160
2N3325	160
2N3326	123
2N3328	160
2N3331	460
2N3337	161
2N3338	161
2N3339	161
2N3340	123AP
2N3341	159
2N3342	106
2N3343	129
2N3344	129
2N3345	129
2N3346	159
2N3347	82
2N3348	82
2N3349	82
2N3350	82
2N3351	82
2N3352	82
2N3365	133
2N3366	133
2N3367	133
2N3368	133
2N3369	133
2N3370	133
2N3371	160
2N3374	192
2N3375	16003
2N3388	154
2N3389	154
2N3390	199
2N3390-U29	199
2N3391	199
2N3391-U29	199
2N3391A	199
2N3392	199
2N3392-U29	199
2N3393	85
2N3393-U29	199
2N3394	85
2N3394-U29	199
2N3395	85
2N3395-W	85
2N3395-WHT	199
2N3395-Y	85
2N3395-YEL	199
2N3396	85
2N3396-O	128
2N3396-ORG	199
2N3396-W	85
2N3396-WHT	199
2N3396-Y	85
2N3396-YEL	199
2N3397	85
2N3397-O	128
2N3397-ORG	199
2N3397-R	128
2N3397-RED	199
2N3397-W	85
2N3397-WHT	199
2N3397-Y	85
2N3397-YEL	199
2N3398	85
2N3398-B	85
2N3398-BLU	199
2N3398-O	128
2N3398-ORG	199
2N3398-R	128
2N3398-RED	199
2N3398-W	85
2N3398-WHT	199
2N3398-YEL	229
2N3399	160
2N3400	160
2N3401	159
2N3402	192A
2N3403	192A
2N3404	192A
2N3405	192A
2N3407	161
2N3409	123AP
2N3410	123AP
2N3411	123AP
2N3412	160
2N3413	194
2N3414	85
2N3415	85
2N3416	85
2N3417	85
2N3418	186
2N3420	186
2N3423	123AP
2N3424	123AP
2N3426	293
2N3427	102
2N3428	102
2N3435	192
2N3436	133
2N3437	133
2N3438	133
2N3439	396
2N3440	396
2N3441	175
2N3442	87
2N3443	160
2N3444	128
2N3444S	224
2N3445	130
2N3446	130
2N3447	130
2N3448	130
2N3449	160
2N3450	396
2N3451	106
2N3452	133
2N3453	133
2N3454	133
2N3455	133
2N3456	133
2N3457	133
2N3458	133
2N3459	133
2N3460	133
2N3461	158
2N3462	123AP
2N3463	123AP
2N3464	159
2N3465	133
2N3466	133
2N3467	129
2N3467S	294
2N3468	129
2N3468S	294
2N3469	128
2N3478	316
2N3483	175
2N3485	159
2N3485A	159
2N3486	159
2N3486A	159
2N3487	182
2N3488	182
2N3490	182
2N3491	182
2N3493	161
2N3494	129
2N3494S	159
2N3495	129
2N3495S	288
2N3496	159
2N3497	288
2N3498	128
2N3498S	191
2N3499	128
2N3499S	191
2N3500	396
2N3500S	191
2N3501	396
2N3501S	191
2N3502	129
2N3503	129
2N3504	159
2N3505	159
2N3506	154
2N3506S	224
2N3507	154
2N3507S	224
2N3508	123A
2N3509	123A
2N3510	123A
2N3511	123A
2N3512	293
2N3525	5512
2N3525A	186
2N3526	154
2N3527	159
2N3528	5455
2N3542	123AP
2N3544	108-1
2N3545	106
2N3546	106
2N3547	159
2N3548	159
2N3549	159
2N3550	159
2N3553	473
2N3554	195A
2N3563	108
2N3563-1	229
2N3564	108-1
2N3565	123A
2N3566	123
2N3567	123
2N3568	128
2N3569	123
2N3570	161
2N3571	161
2N3572	161
2N3576	106
2N3579	159
2N3580	159
2N3581	159
2N3582	159
2N3583	384
2N3584	384
2N3585	175
2N3587	81
2N3588	160
2N3589	198
2N3590	198
2N3591	198
2N3592	198
2N3593	198
2N3594	198
2N3597	71
2N3598	71
2N3599	71
2N3600	316
2N3605	85
2N3605A	123AP
2N3606	85
2N3606A	123AP
2N3607	85
2N3608	133
2N3611	121
2N3612	121
2N3613	121
2N3614	121
2N3615	121
2N3616	179
2N3617	121
2N3618	179
2N3619	186
2N3620	186
2N3622	73
2N3623	186
2N3624	186
2N3625	72
2N3626	152
2N3627	152
2N3628	186
2N3629	72
2N3630	152
2N3632	16002
2N3633	108-1
2N3633/46	107
2N3633/52	192
2N3633/KVT	194
2N3633/TNT	107
2N3635	323
2N3638	129
2N3638A	129
2N3639	106
2N3640	159
2N3641	123
2N3642	123
2N3643	123
2N3644	129
2N3645	129
2N3647	123A
2N3648	123A
2N3649	5360
2N3650	5360
2N3651	5360
2N3652	5360
2N3653	5360
2N3654	5360
2N3655	5360
2N3656	5360
2N3657	5360
2N3658	5360
2N3659	198
2N3660	189
2N3661	129
2N3662	107
2N3663	107
2N3665	128
2N3666	128
2N3667	130
2N3668	314
2N3669	314
2N3670	314
2N3671	129
2N3672	159
2N3673	159
2N3675	152
2N3677	129
2N3678	123
2N3681	107
2N3682	161
2N3683	161
2N3684	133
2N3684A	133
2N3685	133
2N3685A	133
2N3686	133
2N3686A	133
2N3687	133
2N3687A	311
2N3688	123A
2N3689	123A
2N3690	123A
2N3691	123A
2N3692	123A
2N3693	123A
2N3694	123A
2N3700	128
2N3701	128
2N3702	159
2N3703	159
2N3704	85
2N3704A	85
2N3705	85
2N3706	85
2N3707	199
2N3708	199
2N3708-BLU	199
2N3708-BRN	199
2N3708-G	199
2N3708-GRN	199
2N3708-O	128
2N3708-ORG	199
2N3708-R	128
2N3708-RED	199
2N3708-V	199
2N3708-VIO	199
2N3708-Y	128
2N3708-YEL	199
2N3709	199
2N3710	199
2N3711	199
2N3712	154
2N3713	130
2N3713HS	181
2N3714	248
2N3715	130
2N3716	284
2N3716HS	181
2N3719	129
2N3720	129
2N3721	107
2N3723	123AP
2N3724	128
2N3724A	128
2N3725	128
2N3725A	128
2N3726	82
2N3727	82
2N3730	127
2N3731	127
2N3732	127
2N3733	16002
2N3734	324
2N3734S	224
2N3735	324
2N3735S	224
2N3738	124
2N3739	124
2N3740	218
2N3740A	218
2N3741	218
2N3741A	218
2N3742	154
2N3742S	154
2N3743	397
2N3743S	397
2N3744	152
2N3745	152
2N3747	152
2N3748	152
2N3753	5491
2N3762	129
2N3762A	224
2N3762S	224
2N3763	129
2N3763S	224
2N3764A	224
2N3765	294
2N3766	57
2N3767	57
2N3770	160
2N3771	181
2N3772	181
2N3773	284
2N3774	129
2N3775	129
2N3776	129
2N3778	129
2N3779	175
2N3780	129
2N3781	129
2N3782	129
2N3783	160
2N3784	160
2N3785	160
2N3788	163A
2N3789	219
2N3790	219
2N3791	219
2N3792	285
2N3793	85
2N3794	85
2N3796	462
2N3797	462
2N3798	159
2N3798A	194
2N3799	159
2N3806	82
2N3806A	82
2N3807	82
2N3807A	82
2N3808	82
2N3808A	82
2N3809	82
2N3809A	82
2N3810	82
2N3810A	82
2N3818	16002
2N3819	312
2N3821	133
2N3822	459
2N3823	459
2N3824	459
2N3825	107
2N3826	107
2N3827	199
2N3828	123AP
2N3829	159
2N3830	196
2N3832	161
2N3833	278
2N3834	278
2N3835	278
2N3839	316
2N3840	159
2N3841	159
2N3842	159
2N3843	123AP
2N3843A	123AP
2N3844	289A
2N3844A	289A
2N3845	107
2N3845A	107
2N3850	74
2N3851	74
2N3852	74
2N3853	74
2N3854	289A
2N3854A	289A
2N3855	107
2N3855A	107
2N3856	107
2N3856A	107
2N3857	159
2N3858	85
2N3858A	85
2N3859	199
2N3859A	199
2N3860	199
2N3862	123AP
2N3863	130
2N3864	130
2N3865	162
2N3866	311
2N3866A	311
2N3867	129
2N3868	129
2N3869	123
2N3870	5517
2N3871	5517
2N3872	5518
2N3873	5519
2N3877	199
2N3877A	199
2N3878	175
2N3880	123AP
2N3881	293
2N3883	160
2N3884	5580
2N3885	5580
2N3886	5580
2N3887	5582
2N3888	5582
2N3889	5582
2N3890	5582
2N3891	5584
2N3892	5584
2N3893	5584
2N3894	5584
2N3895	5584
2N3896	5542
2N3897	5543
2N3898	5545
2N3899	5547
2N3900	199
2N3900A	199
2N3901	85
2N3902	163A
2N3903	123AP
2N3904	123AP
2N3905	159
2N3906	159
2N3907	81
2N3908	81
2N3909	460
2N3909A	460
2N3910	159
2N3911	159
2N3912	159
2N3913	159
2N3914	159
2N3916	198
2N3917	130
2N3918	130
2N3919	186
2N3923	154
2N3924	473
2N3925	186
2N3926	475
2N3927	475
2N3930	159
2N3931	159
2N3932	316
2N3933	316
2N3945	128
2N3946	123A
2N3947	123A
2N3948	77
2N3950	236
2N3953	161
2N3961	186
2N3962	159
2N3963	159
2N3964	159
2N3965	159
2N3966	133
2N3967	133
2N3967A	133
2N3968	133
2N3968A	133
2N3969	133
2N3969A	133
2N3970	466
2N3973	85
2N3974	85
2N3975	85
2N3976	85
2N3977	159
2N3978	159
2N3979	159
2N3981	192
2N3982	192
2N3983	107
2N3984	107
2N3985	107
2N3995	160
2N3998	75
2N3999	75
2N4000	128
2N4001	128
2N4002	70
2N4003	70
2N4006	159
2N4007	159
2N4008	159
2N4013	123A
2N4014	123A
2N4015	159
2N4026	129
2N4027	159
2N4028	159
2N4029	159
2N4030	129
2N4031	129
2N4032	129
2N4033	129
2N4034	159
2N4035	159
2N4036	129
2N4037	129
2N4040	186
2N4046	293
2N4047	128
2N4048	28
2N4049	28
2N4051	28
2N4052	28
2N4054	157
2N4055	157
2N4056	157
2N4057	157
2N4058	234
2N4059	234
2N4060	234
2N4061	234
2N4062	234
2N4063	225
2N4064	225
2N4068	154
2N4069	198
2N4072	123A
2N4073	123
2N4074	123AP
2N4075	96
2N4076	96
2N4077	155
2N4078	131
2N4079(NPN)	155
2N4079(PNP)	131
2N4080	395
2N4081	161
2N4086	199
2N4087	199
2N4087A	199
2N4100	123AP
2N4101	5513
2N4104	123AP
2N4105	103
2N4106	102
2N4107	158
2N4111	130
2N4112	130
2N4113	130
2N4114	130
2N4117	133
2N4117A	133
2N4118	133
2N4119	133
2N4119A	133
2N4121	159
2N4122	159
2N4123	123AP
2N4124	123AP
2N4125	159
2N4126	159
2N4127	350
2N4128	152
2N4130	130
2N4134	316
2N4135	161
2N4136	103A
2N4137	123AP
2N4138	199
2N4140	123A
2N4141	123A
2N4142	159
2N4143	159
2N4145	5400
2N4149	159
2N4151	5494
2N4152	5494
2N4153	5494
2N4154	5494
2N4155	5494
2N4156	5494
2N4159	5494
2N4160	5494
2N4161	5494
2N4162	5494
2N4163	5494
2N4164	5494
2N4167	5480
2N4168	5481
2N4169	5482
2N4170	5483
2N4171	5484
2N4172	5485
2N4173	5486
2N4174	5487
2N4175	5494
2N4176	5494
2N4177	5494
2N4178	5494
2N4179	5494
2N4180	5494
2N4207	106
2N4208	106
2N4209	106
2N4210	71
2N4211	71
2N4220	133
2N4220A	133
2N4221	456
2N4221A	456
2N4222	456
2N4222A	456
2N4223	133
2N4224	133
2N4225	186
2N4226	186
2N4227	123AP
2N4228	159
2N4231	175
2N4231A	184
2N4232	175
2N4232A	196
2N4233	175
2N4233A	196
2N4235	323
2N4236	323
2N4237	324
2N4238	324
2N4239	324
2N4240	124
2N4241	121
2N4242	179
2N4243	179
2N4244	104
2N4245	179
2N4246	179
2N4247	104
2N4248	159
2N4249	159
2N4250	159
2N4250A	159
2N4251	316
2N4252	108
2N4253	108
2N4254	107
2N4255	107
2N4256	123AP
2N4257	159
2N4257A	159
2N4258	159
2N4258A	106
2N4259	316
2N4261	395
2N4264	123AP
2N4265	123AP
2N4269	154
2N4270	154
2N4271	198
2N4273	175
2N4274	233
2N4275	123A
2N4276	27
2N4277	27
2N4278	27
2N4279	27
2N4280	27
2N4281	27
2N4284	159
2N4285	159
2N4286	199
2N4287	199
2N4288	234
2N4289	234
2N4290	290A
2N4291	290A
2N4292	107
2N4293	107
2N4294	107
2N4295	107
2N4296	124
2N4297	124
2N4298	124
2N4299	124
2N4301	73
2N4302	133
2N4303	133
2N4304	133
2N4307	152
2N4308	152
2N4311	152
2N4312	152
2N4313	106

PART NUMBER	NTE REPLACEMENT
2N4314	129
2N4338	133
2N4339	133
2N4340	133
2N4341	133
2N4346	127
2N4347	87
2N4348	284
2N4349	235
2N4350	186
2N4354	129
2N4355	129
2N4356	129
2N4359	159
2N4360	326
2N4361	5570
2N4362	5570
2N4363	5572
2N4364	5572
2N4365	5574
2N4366	5574
2N4367	5574
2N4371	5575
2N4372	5575
2N4373	5577
2N4374	5577
2N4375	5579
2N4376	5579
2N4377	5579
2N4383	293
2N4384	123A
2N4385	293
2N4386	123A
2N4387	218
2N4388	218
2N4389	159
2N4390	194
2N4395	130
2N4396	130
2N4397	161
2N4398	180
2N4399	180
2N4400	123AP
2N4401	123AP
2N4402	159
2N4403	159
2N4404	129
2N4405	129
2N4406	129
2N4407	129
2N4409	194
2N4410	194
2N4411	159
2N4412	129
2N4412A	129
2N4413	159
2N4413A	159
2N4414	129
2N4414A	129
2N4415	159
2N4415A	159
2N4416	452
2N4416A	452
2N4417	133
2N4418	108-1
2N4419	108-1
2N4420	123AP
2N4421	123AP
2N4422	123AP
2N4423	106
2N4424	85
2N4425	192A
2N4427	346
2N4428	186
2N4429	186
2N4430	186
2N4432	123AP
2N4432A	123AP
2N4433	107
2N4434	161
2N4435	161
2N4436	123A
2N4437	123A
2N4441	5442
2N4442	5444
2N4443	5446
2N4444	5448
2N4449	108-1
2N4450	123AP
2N4451	106
2N4452	159
2N4453	106
2N4625	123AP
2N4836M	176
2N4851	6401
2N4852	6409
2N4853	6409
2N4854	194
2N4855	194
2N4856	466
2N4864	175
2N4867	133
2N4867A	133
2N4868	133
2N4868A	133
2N4869	133
2N4869A	133
2N4870	6410
2N4871	6410
2N4872	106
2N4873	108-1
2N4874	278
2N4875	278
2N4876	278
2N4877	152
2N4888	288
2N4889	288
2N4890	129
2N4890S	129
2N4891	6409
2N4893	6401
2N4895	224
2N4896	224
2N4897	224
2N4898	218
2N4899	218
2N4900	218
2N4901	219
2N4902	219
2N4903	219
2N4904	281
2N4905	281
2N4906	218
2N4907	218
2N4908	219
2N4909	218
2N4910	175
2N4911	175
2N4912	175
2N4913	130
2N4914	130
2N4915	130
2N4916	159
2N4917	159
2N4918	185
2N4919	185
2N4920	185
2N4921	184
2N4922	184
2N4923	184
2N4924	128
2N4924S	190
2N4925	154
2N4926	154
2N4927	154
2N4928	129
2N4928S	189
2N4929	397
2N4930	397
2N4930S	397
2N4931	397
2N4934	316
2N4935	316
2N4936	316
2N4937	82
2N4938	82
2N4939	82
2N4943	128
2N4944	123A
2N4945	123A
2N4946	123A
2N4948	6409
2N4949	6409
2N4950	123AP
2N4951	85
2N4952	85
2N4953	85
2N4954	85
2N4957	395
2N4958	395
2N4959	395
2N4960	128
2N4961	128
2N4962	123A
2N4963	128
2N4964	159
2N4965	159
2N4966	123AP
2N4967	123AP
2N4968	123AP
2N4969	123A
2N4970	123A
2N4971	159
2N4971A	193
2N4972	159
2N4972A	193
2N4976	186
2N4980	159
2N4981	159
2N4982	159
2N4982A	193
2N4983	6404
2N4985	6404
2N4986	6404
2N4987	6404
2N4989	6404
2N4990	6404
2N4991	6403
2N4993	6403
2N4994	123AP
2N4995	123AP
2N4996	108-1
2N4997	108-1
2N5006	72
2N5008	72
2N5010	198
2N5016	16002
2N5022	129
2N5023	129
2N5024	316
2N5027	123AP
2N5028	123AP
2N5029	123AP
2N5030	107
2N5031	107
2N5032	107
2N5036	390
2N5037	390
2N5038	327
2N5038-1	327
2N5039	327
2N5039-1	327
2N5040	129
2N5041	129
2N5042	129
2N5045	133
2N5046	133
2N5047	133
2N5048	73
2N5051	291
2N5053	316
2N5054	316
2N5055	193
2N5056	106
2N5057	106
2N5058	154
2N5058S	154
2N5059	154
2N5059S	154
2N5060	5400
2N5061	5401
2N5062	5402
2N5063	5403
2N5064	5404
2N5066	123AP
2N5067	280
2N5068	280
2N5069	280
2N5073	287
2N5077	95
2N5078	312
2N5078A	312
2N5079	186
2N5080	186
2N5081	123AP
2N5082	123AP
2N5083	96
2N5084	96
2N5085	96
2N5086	159
2N5086A	193
2N5087	159
2N5087A	193
2N5088	123AP
2N5089	47
2N5092	198
2N5095	198
2N5097	130
2N5101	225
2N5103	123AP
2N5103A	312
2N5104A	312
2N5105A	312
2N5106	293
2N5107	123AP
2N5108	278
2N5108A	278
2N5109	278
2N5110	129
2N5111	129
2N5112	153
2N5120	128
2N5126	161
2N5127	123A
2N5128	123
2N5129	123
2N5130	108-1
2N5131	123AP
2N5132	123A
2N5133	161
2N5134	123AP
2N5135	123
2N5136	123
2N5137	123A
2N5138	159
2N5138A	193
2N5139	159
2N5139A	193
2N5140	106
2N5141	106
2N5142	159
2N5142A	193
2N5143	159
2N5143A	193
2N5144	123AP
2N5155	127
2N5156	127
2N5157	163A
2N5160	129
2N5161	153
2N5163	132
2N5163A	312
2N5168	5521
2N5169	5524
2N5170	5545
2N5171	5529
2N5172	85
2N5174	154
2N5175	289A
2N5176	154
2N5179	316
2N5180	316
2N5181	161
2N5182	161
2N5183	123
2N5184	154
2N5185	154
2N5186	123AP
2N5187	123AP
2N5188	128
2N5189	128
2N5190	184
2N5191	184
2N5192	184
2N5193	185
2N5194	185
2N5195	185
2N5200	108-1
2N5201	100
2N5202	175
2N5204	5547
2N5205	5548
2N5208	395
2N5209	123AP
2N5210	123AP
2N5211	128
2N5213	196
2N5218	73
2N5219	123AP
2N5220	123AP
2N5221	159
2N5222	229
2N5223	123AP
2N5224	123AP
2N5225	123AP
2N5226	159
2N5226A	193
2N5227	159
2N5227A	193
2N5228	106
2N5229	159
2N5230	159
2N5231	159
2N5232	199
2N5232A	199
2N5233	128
2N5234	128
2N5235	128
2N5236	123AP
2N5239	283
2N5240	283
2N5241	283
2N5242	129
2N5243	129
2N5245	312
2N5245A	312
2N5246	312
2N5246A	312
2N5247	312
2N5247A	312
2N5248	132
2N5248A	312
2N5249	199
2N5249A	199
2N5252	198
2N5253	198
2N5258	312
2N5264	162
2N5267	133
2N5268	133
2N5269	133
2N5270	133
2N5272	108-1
2N5273	5683
2N5274	5685
2N5275	5697
2N5277	133
2N5278A	312
2N5279	198
2N5288	72
2N5289	72
2N5292	108-1
2N5293	152
2N5294	152
2N5295	152
2N5296	152
2N5297	152
2N5298	152
2N5300	128
2N5301	181
2N5302	181
2N5303	181
2N5304	72
2N5305	172A
2N5305A	172A
2N5306	172A
2N5306A	172A
2N5307	172A
2N5307A	172A
2N5308	172A
2N5308A	172A
2N5309	128
2N5310	128
2N5311	128
2N5313	73
2N5315	73
2N5317	72
2N5319	72
2N5320	16005
2N5320HS	192
2N5321	16005
2N5322	16004
2N5323	16004
2N5324	127
2N5325	127
2N5331	70
2N5334	152
2N5346	96
2N5347	96
2N5348	96
2N5349	96
2N5354	290
2N5354A	193
2N5355	290
2N5355A	193
2N5356	290
2N5356A	193
2N5358	133
2N5359	133
2N5360	133
2N5360A	312
2N5361	133
2N5362	133
2N5363	133
2N5364	133
2N5365	290A
2N5365A	193
2N5366	290A
2N5366A	193
2N5367	290A
2N5367A	193
2N5368	123A
2N5369	123A
2N5370	123A
2N5371	123AP
2N5372	159
2N5372A	193
2N5373	159
2N5373A	193
2N5374	159
2N5374A	193
2N5375	159
2N5375A	193
2N5378	159
2N5378A	193
2N5379	159
2N5379A	193
2N5380	123AP
2N5381	123AP
2N5382	159
2N5382A	193
2N5383	159
2N5383A	193
2N5385	75
2N5391	133
2N5392	133
2N5393	133
2N5394	133
2N5395	133
2N5396	133
2N5397	312
2N5398	312
2N5399	108-1
2N5400	288
2N5401	288
2N5410(TRW)	5876
2N5415	397
2N5416	397
2N5417	123AP
2N5418	123AP
2N5419	123AP
2N5420	123AP
2N5421	346
2N5423	186
2N5424	152
2N5427	196
2N5428	196
2N5429	196
2N5430	196
2N5431	6400
2N5432	132
2N5433	312
2N5435	104
2N5438	104
2N5441	5688
2N5442	5689
2N5443	5690
2N5444	5693
2N5445	5695
2N5446	5697
2N5447	159
2N5447A	193
2N5448	159
2N5448A	193
2N5449	123A
2N5450	123A
2N5451	123A
2N5452	133
2N5453	133
2N5454	133
2N5456	123AP
2N5457	457
2N5458	457
2N5459	457
2N5460	326
2N5461	326
2N5462	326
2N5463	326
2N5464	326
2N5466	163A
2N5467	165
2N5477	74
2N5478	74
2N5479	74
2N5480	74
2N5481	186
2N5482	186
2N5483	152
2N5484	312
2N5485	451
2N5485-1	312
2N5486	312
2N5489	186
2N5490	196
2N5491	196
2N5492	196
2N5493	196
2N5494	196
2N5495	196
2N5496	196
2N5497	196
2N5525	172A
2N5539	70
2N5541	198
2N5542	73
2N5543	133
2N5544	133
2N5550	194
2N5551	194
2N5555	312
2N5556	133
2N5557	133
2N5558	133
2N5559	162
2N5561	133
2N5562	133
2N5563	133
2N5567	5688
2N5568	5689
2N5569	5673
2N5570	5675
2N5571	5688
2N5572	5689
2N5573	5673
2N5574	5675
2N5581	123AP
2N5582	123AP
2N5589	347
2N5590	349
2N5591	351
2N5592	312
2N5593	312
2N5594	312
2N5597	153
2N5598	175
2N5600	175
2N5601	175
2N5602	175
2N5604	175
2N5606	152
2N5608	186
2N5610	186
2N5612	186
2N5614	130
2N5616	181
2N5618	121
2N5621	180
2N5622	130
2N5623	180
2N5625	180
2N5629	181
2N5630	284
2N5631	284
2N5632	284
2N5633	284
2N5634	284
2N5637	152
2N5638	467
2N5639	467
2N5640	133
2N5641	357
2N5642	359
2N5643	360
2N5644	362
2N5645	186
2N5646	364
2N5648	133
2N5649	133
2N5650	161
2N5651	161
2N5652	161
2N5653	467
2N5654	467
2N5655	157
2N5656	157
2N5657	157
2N5660	198
2N5661	198
2N5662	198
2N5663	198
2N5668	133
2N5669	312
2N5670	312
2N5671	327
2N5672	327
2N5679	323
2N5680	323
2N5681	324
2N5682	324
2N5683	30
2N5684	30
2N5685	29
2N5686	29
2N5687	346
2N5688	186
2N5689	337
2N5690	338
2N5691	320
2N5692	104
2N5693	104
2N5697	186
2N5698	362
2N5699	186
2N5700	152
2N5701	152
2N5702	195A
2N5703	186
2N5704	152
2N5705	152
2N5710	195A
2N5711	357
2N5712	359
2N5713	359
2N5716	133
2N5717	133
2N5718	133
2N5730	130
2N5731	72
2N5733	70
2N5735	123AP
2N5736	123AP
2N5737	219
2N5738	180
2N5741	180
2N5742	180
2N5745	180
2N5754	5640
2N5755	5641
2N5756	5642
2N5757	5643
2N5758	162
2N5759	162
2N5760	162
2N5763	159
2N5764	186
2N5765	152
2N5766	186
2N5767	186
2N5768	152
2N5769	123AP
2N5770	108
2N5771	106
2N5772	108
2N5777	3035A
2N5778	3035A
2N5779	3035A
2N5780	3035A
2N5787	5400
2N5788	5401
2N5789	5402
2N5790	5404
2N5793	194
2N5794	81
2N5795	159
2N5796	82
2N5804	283
2N5805	283
2N5806	5543
2N5807	5545
2N5808	5546
2N5809	5547
2N5810	123AP
2N5811	294
2N5812	293
2N5813	294
2N5814	123AP
2N5815	294
2N5816	123A
2N5817	290A
2N5818	159
2N5819	294
2N5820	128
2N5820HS	192
2N5821	129
2N5821HS	193
2N5822	192
2N5823	193
2N5824	199
2N5825	199
2N5826	199
2N5827	199
2N5827A	199
2N5828	199
2N5828A	199
2N5829	395
2N5830	287
2N5830A	229
2N5831	194
2N5832	194
2N5833	287
2N5834	194
2N5835	161
2N5836	224
2N5837	278
2N5838	94
2N5839	94
2N5840	52
2N5841	194
2N5842	194
2N5845	123AP
2N5845A	123AP
2N5846	295
2N5847	337
2N5848	338
2N5849	339
2N5851	123AP
2N5852	199
2N5855	159
2N5856	192
2N5857	159
2N5858	287
2N5859	128
2N5864	129
2N5865	129
2N5867	219
2N5868	281
2N5869	130
2N5870	328
2N5871	219
2N5872	281
2N5873	130
2N5874	328
2N5875	219
2N5876	219
2N5877	130
2N5878	284
2N5879	180
2N5880	180

PART NUMBER	NTE REPLACEMENT
2N5881	181
2N5882	181
2N5883	180
2N5884	180
2N5885	181
2N5886	181
2N5887	131
2N5888	131
2N5889	131
2N5890	131
2N5891	131
2N5892	131
2N5893	131
2N5894	131
2N5895	131
2N5896	131
2N5897	131
2N5898	131
2N5899	131
2N5900	131
2N5901	131
2N5910	106
2N5913	472
2N5914	362
2N5915	364
2N5917	320
2N5920	329
2N5924	325
2N5925	325
2N5944	362
2N5945	363
2N5946	364
2N5947	76
2N5949	312
2N5950	312
2N5951	312
2N5952	312
2N5953	312
2N5961	123AP
2N5962	47
2N5963	47
2N5964	128
2N5965	128
2N5970	130
2N5971	130
2N5972	181
2N5973	181
2N5974	183
2N5975	183
2N5976	183
2N5977	182
2N5978	182
2N5979	182
2N5980	183
2N5981	183
2N5982	183
2N5983	182
2N5984	182
2N5985	182
2N5988	183
2N5989	182
2N5991	182
2N5992	325
2N5993	320
2N5995	320
2N5996	350
2N5998	297
2N5999	298
2N6000	123AP
2N6001	294
2N6002	293
2N6003	159
2N6005	294
2N6006	293
2N6007	294
2N6008	123AP
2N6009	294
2N6010	293
2N6011	294
2N6014	192
2N6015	193
2N6021	153
2N6022	292
2N6023	153
2N6024	292
2N6025	292
2N6026	292
2N6027	6402
2N6028	6402
2N6029	61
2N6030	61
2N6031	61
2N6034	254
2N6035	254
2N6036	254
2N6037	253
2N6038	253
2N6039	253
2N6041	264
2N6042	264
2N6043	263
2N6044	263
2N6045	263
2N6049	218
2N6050	248
2N6051	248
2N6052	248
2N6053	244
2N6054	244
2N6055	243
2N6056	243
2N6057	247
2N6058	247
2N6059	247
2N6067	159
2N6068	5600
2N6069	5601
2N6070	5602
2N6071	5603
2N6072	5604
2N6072A	5604
2N6073	5605
2N6074	5606
2N6075	5607
2N6076	159
2N6077	384
2N6078	384
2N6079	384
2N6080	348
2N6081	350
2N6082	351
2N6083	320
2N6084	320
2N6091	471
2N6094	353
2N6095	354
2N6096	355
2N6097	356
2N6098	377
2N6099	331
2N6100	331
2N6101	331
2N6102	331
2N6103	331
2N6105	320
2N6106	197
2N6107	197
2N6108	197
2N6109	197
2N6110	197
2N6111	197
2N6112	199
2N6121	196
2N6122	196
2N6123	377
2N6124	197
2N6125	197
2N6126	197
2N6128	72
2N6129	196
2N6130	152
2N6131	196
2N6132	197
2N6133	153
2N6134	197
2N6135	76
2N6146	5675
2N6151	5614
2N6153	5618
2N6156	5637
2N6157	5688
2N6158	5689
2N6159	5690
2N6160	5693
2N6161	5695
2N6162	5697
2N6163	56022
2N6164	56024
2N6165	56026
2N6167	5562
2N6169	5564
2N6175	228A
2N6176	157
2N6177	228A
2N6179	184
2N6181	185
2N6186	183
2N6187	183
2N6188	331
2N6189	331
2N6199	359
2N6200	360
2N6207	320
2N6208	320
2N6211	38
2N6212	38
2N6213	38
2N6214	38
2N6215	70
2N6216	162
2N6218	287
2N6219	287
2N6220	287
2N6221	194
2N6222	123A
2N6223	159
2N6224	194
2N6225	194
2N6226	281
2N6227	281
2N6228	281
2N6229	285
2N6230	285
2N6231	285
2N6236	5411
2N6237	5412
2N6238	5413
2N6239	5414
2N6240	5415
2N6241	5416
2N6246	219
2N6247	219
2N6248	180
2N6249	53
2N6250	53
2N6251	53
2N6253	130
2N6254	181
2N6255	473
2N6256	261
2N6257	181
2N6258	181
2N6259	284
2N6260	175
2N6261	175
2N6262	87
2N6263	175
2N6274	387
2N6275	387
2N6276	387
2N6277	387
2N6278	70
2N6279	70
2N6280	70
2N6281	70
2N6282	251
2N6283	251
2N6284	251
2N6285	252
2N6286	252
2N6287	252
2N6288	186
2N6289	186
2N6290	186
2N6291	186
2N6292	196
2N6293	186
2N6294	274
2N6295	274
2N6296	275
2N6297	275
2N6301	261
2N6303	129
2N6304	316
2N6305	316
2N6306	283
2N6307	283
2N6307M	162
2N6308	283
2N6308M	162
2N6312	292
2N6313	292
2N6314	292
2N6315	196
2N6316	196
2N6317	197
2N6318	197
2N6326	181
2N6327	181
2N6328	181
2N6329	180
2N6330	180
2N6331	180
2N6338	327
2N6339	327
2N6340	327
2N6341	327
2N6342	5633
2N6342A	56004
2N6343	56006
2N6343A	56006
2N6344	56008
2N6344A	56008
2N6345	56010
2N6345A	56010
2N6346	5633
2N6346A	56004
2N6347	56006
2N6347A	56006
2N6348	56008
2N6348A	56008
2N6349	56010
2N6349A	56010
2N6354	284
2N6355	251
2N6356	251
2N6357	247
2N6358	251
2N6359	181
2N6360	181
2N6365	160
2N6365A	160
2N6366	295
2N6367	338F
2N6368	317
2N6371	130
2N6383	245
2N6384	245
2N6385	245
2N6386	263
2N6387	263
2N6388	263
2N6389	316
2N6394	5550
2N6395	5552
2N6396	5552
2N6397	5554
2N6398	5556
2N6400	5550
2N6401	5552
2N6402	5552
2N6403	5554
2N6404	5556
2N6420	38
2N6421	38
2N6422	38
2N6423	38
2N6424	38
2N6425	38
2N6426	46
2N6427	46
2N6430	396
2N6431	396
2N6436	180
2N6437	180
2N6455	318
2N6456	325
2N6457	318
2N6458	318
2N6459	318
2N6465	175
2N6469	219
2N6470	130
2N6471	130
2N6472	181
2N6473	291
2N6474	291
2N6475	292
2N6476	292
2N6477	292
2N6478	292
2N6486	331
2N6487	331
2N6488	331
2N6489	332
2N6490	332
2N6491	332
2N6492	243
2N6493	243
2N6494	243
2N6496	328
2N6500	175
2N6504	5550
2N6506	5552
2N6507	5554
2N6508	5556
2N6509	5558
2N6510	283
2N6511	283
2N6512	283
2N6513	283
2N6514	283
2N6515	287
2N6516	287
2N6518	288
2N6519	288
2N6531	261
2N6532	261
2N6534	261
2N6535	261
2N6536	261
2N6542	283
2N6543	283
2N6544	53
2N6545	53
2N6546	53
2N6547	53
2N6548	268
2N6549	268
2N6551	210
2N6552	210
2N6553	210
2N6554	211
2N6555	211
2N6556	211
2N6557	228A
2N6558	171
2N6558L	171
2N6559	228A
2N6569	130
2N6576	249
2N6594	219
2N6601	278
2N6609	285
2N6647	283
2N6648	246
2N6649	246
2N6650	246
2N6666	264
2N6667	264
2N6668	264
2N6671	2319
2N6672	2319
2N6673	2319
2N6674	2319
2N6675	2319
2N6676	53
2N6677	53
2N6678	53
2N6705	24
2N6706	24
2N6717	128P
2N6718	128P
2N6720	255
2N6721	255
2N6722	255
2N6723	255
2N6724	48
2N6726	129P
2N6727	129P
2N6728	129P
2N6729	129P
2N6730	129P
2N6731	128P
2N6732	129P
2N6733	227
2N6734	227
2N6735	227
2N6738	379
2N6739	379
2N6740	379
2N6751	2319
2N6752	2319
2N6836	2319
2N7441AE	7441
2N19616	160
2N49315	397
2N54433	160
2NJ5A	100
2NJ5D	102
2NJ6	100
2NJ8A	100
2NJ9A	102
2NJ9D	102
2NJ50	126
2NJ51	126
2NJ52	126
2NJ53	126
2NJ59D	126
2NJ233B	312
2NL48	192
2NS31	102
2NS32	102
2NS121	102
2NSM-1	125
2NU/9	176
2NU/9WHT	176
2NU/9YEL	176
2OA90	110MP
2OC72	158
2P1M	5444
2P4M	5456
2P5M	5458
2P2150M	177
2PB187	102A
2PD-358	109
2P05M	5453
2PS428	123AP
2R9.1	5124A
2R9.1A	5124A
2R9.1B	5124A
2R10	5125A
2R10A	5125A
2R10B	5125A
2R11	5126A
2R11A	5126A
2R11B	5126A
2R12	5127A
2R12A	5127A
2R12B	5127A
2R13	5128A
2R13A	5128A
2R13B	5128A
2R15	5130A
2R15A	5130A
2R15B	5130A
2R16	5131A
2R16A	5131A
2R16B	5131A
2R18	5133A
2R18A	5133A
2R18B	5133A
2R20	5135A
2R20A	5135A
2R20B	5135A
2R22	5136A
2R22A	5136A
2R22B	5136A
2R24	5137A
2R24A	5137A
2R24B	5137A
2R27	5139A
2R27A	5139A
2R27B	5139A
2R30	5141A
2R30A	5141A
2R30B	5141A
2R33	5142A
2R33A	5142A
2R33B	5142A
2R36	5143A
2R36A	5143A
2R36B	5143A
2R39	5144A
2R39A	5144A
2R39B	5144A
2R43	5145A
2R43A	5145A
2R43B	5145A
2R47	5146A
2R47A	5146A
2R47B	5146A
2R51	5147A
2R51A	5147A
2R51B	5147A
2R56	5148A
2R56A	5148A
2R56B	5148A
2R68	5151A
2R68A	5151A
2R68B	5151A
2R75	5152A
2R75A	5152A
2R75B	5152A
2R91	5155A
2R91A	5155A
2R91B	5155A
2R100	5156A
2R100A	5156A
2R100B	5156A
2R110	5157A
2R110A	5157A
2R110B	5157A
2R120	5158A
2R120A	5158A
2R120B	5158A
2R130	5159A
2R130A	5159A
2R130B	5159A
2R140	5160A
2R140A	5160A
2R140B	5160A
2R150	5161A
2R150A	5161A
2R150B	5161A
2R160	5162A
2R160A	5162A
2R160B	5162A
2R180	5164A
2R180A	5164A
2R180B	5164A
2R200	5166A
2R200A	5166A
2R200B	5166A
2RA733	290A
2RC17	123A
2RC945	85
2RC1589	474
2S001	123
2S002	194
2S003	123
2S004	123
2S005	123AP
2S006	108
2S020	128
2S012	152
2S014	128
2S017	128
2S018	128
2S019	128
2S021	129
2S022	129
2S023	129
2S033	130
2S034	130
2S035	162
2S036	162
2S095A	123AP
2S0781	373
2S1K	116
2S12	100
2S13	100
2S14	102
2S15	102
2S15A	102
2S22	102
2S24	102
2S25	100
2S26	121
2S26A	121
2S30	100
2S31	100
2S32	102
2S33	102
2S34	102
2S35	126
2S36	126
2S37	102
2S38	102
2S39	102
2S40	102
2S41	104
2S41A	104
2S42	104
2S43	102
2S44	102
2S45	100
2S46	102
2S47	102
2S49	100
2S51	100
2S52	100
2S53	100
2S54	102
2S56	102
2S57	160
2S58	126
2S60	100
2S82	107
2S91	100
2S92	100
2S92A	100
2S93	100
2S93A	100
2S95A	123AP
2S96	126
2S97	126
2S98	126
2S101	123AP
2S102	123AP
2S103	128
2S104	128
2S109	126
2S110	126
2S111	100
2S112	126
2S131	123AP
2S134	176
2S141	126
2S142	126
2S143	126
2S144	160
2S145	126
2S146	126
2S148	160
2S155	100
2S159	100
2S160	103A
2S163	102
2S167	100
2S174	100
2S175	160
2S176	126
2S178	100
2S179	102
2S188FM-1	109
2S189	102A
2S201	160
2S257	187
2S273	102A
2S277C	103A
2S301	129
2S302	129
2S302A	129
2S303	129
2S304	129
2S305	159
2S306	159
2S307	159
2S307A	193
2S321	159
2S321A	193
2S322	159
2S322A	159
2S322AB	193
2S323	159
2S323A	193
2S324	159
2S324A	193
2S325	194
2S326	159
2S326A	193
2S327	159
2S327A	193
2S351B	160
2S363	123AP
2S375B	102
2S471-1	160
2S494-YE	193
2S501	123AP
2S502	123AP
2S503	123AP
2S512	108
2S564R	106
2S608E	159
2S608F	159
2S644(S)	128
2S645	123AP
2S673C	159
2S701	123
2S702	123
2S703	123
2S711	123
2S712	123
2S731	123AP
2S732	123AP
2S733	123AP
2S741	128
2S741A	123AP
2S742	128
2S742A	128
2S743	154
2S743A	154
2S744	128
2S744A	123AP
2S745	128
2S745A	154
2S746	154
2S746A	154
2S858	288
2S1182D	123AP
2S1718/4454C	140A
2S1760	102
2S2076	519
2S2114A	138A
2S2271	399
2S2472	519
2S2473H	519
2S3010	129
2S3020	159
2S3020A	193
2S3021	159
2S3021A	193
2S3030	159
2S3030A	193
2S3040	159
2S3040A	193
2S3187	100
2S3210	159
2S3210A	193
2S3220	159
2S3220A	193
2S3221	159
2S3221A	193
2S3230	159
2S3230A	193
2S3240	159
2S3240A	193
2S3324	100
2S3370	126
2S4049	4049
2S5295G	552
2S6856	171
2S10032	177
2S20141	123AP
2S-16E	116
2SA007H	158
2SA076F	160
2SA081C	158
2SA098R	160
2SA12	102A
2SA12(V)	102A
2SA12A	102A
2SA12B	102A
2SA12C	102A
2SA12D	102A
2SA12H	102A
2SA12V	102A

PART NUMBER	NTE REPLACEMENT
2SA13	160
2SA13A	160
2SA13B	160
2SA13C	160
2SA13D	160
2SA13G	160
2SA13L	160
2SA13M	160
2SA13OR	160
2SA13R	160
2SA13X	160
2SA13Y	160
2SA14	160
2SA14A	160
2SA14B	160
2SA14C	160
2SA14D	160
2SA14E	160
2SA14G	160
2SA14L	160
2SA14M	160
2SA14OR	160
2SA14R	160
2SA14X	160
2SA14Y	160
2SA15	102A
2SA15-6	102A
2SA15A	102A
2SA15B	102A
2SA15BK	102A
2SA15BL	102A
2SA15BLU	102A
2SA15C	102A
2SA15D	102A
2SA15E	102A
2SA15F	102A
2SA15G	102A
2SA15H	102A
2SA15K	102A
2SA15L	102A
2SA15M	102A
2SA15OR	102A
2SA15R	102A
2SA15RD	102A
2SA15U	102A
2SA15V	102A
2SA15V/R	102A
2SA15VR	102A
2SA15X	102A
2SA15Y	102A
2SA16	102A
2SA16A	160
2SA16B	160
2SA16C	160
2SA16D	160
2SA16E	160
2SA16F	160
2SA16L	160
2SA16M	160
2SA16OR	160
2SA16R	160
2SA16X	160
2SA16Y	160
2SA17	102A
2SA17A	160
2SA17B	160
2SA17C	160
2SA17D	160
2SA17E	160
2SA17F	160
2SA17G	160
2SA17H	102A
2SA17L	160
2SA17OR	160
2SA17R	160
2SA17X	160
2SA17Y	160
2SA18	102A
2SA18A	160
2SA18B	160
2SA18C	160
2SA18D	160
2SA18E	160
2SA18F	160
2SA18G	160
2SA18H	102A
2SA18L	160
2SA18M	160
2SA18OR	160
2SA18R	160
2SA18X	160
2SA18Y	160
2SA19	126
2SA19A	158
2SA19B	158
2SA19C	158
2SA19D	158
2SA19E	158
2SA19F	158
2SA19G	158
2SA19L	158
2SA19M	158
2SA19OR	158
2SA19R	158
2SA19X	158
2SA19Y	158
2SA20	126
2SA20A	158
2SA20B	158
2SA20C	158
2SA20D	158
2SA20E	158
2SA20F	158
2SA20G	158
2SA20L	158
2SA20M	158
2SA200R	158
2SA20R	158
2SA20X	158
2SA20Y	158
2SA21	126
2SA21A	158
2SA21B	158
2SA21C	158
2SA21D	158
2SA21E	158
2SA21F	158
2SA21G	158
2SA21L	158
2SA21M	158
2SA210R	158
2SA21R	158
2SA21X	158
2SA21Y	158
2SA22	160
2SA23	160
2SA24	160
2SA25	160
2SA26	100
2SA26A	160
2SA26B	160
2SA26C	160
2SA26D	160
2SA26E	160
2SA26F	160
2SA26G	160
2SA26L	160
2SA26M	160
2SA260R	160
2SA26R	160
2SA26X	160
2SA26Y	160
2SA27	160
2SA28	126
2SA28A	160
2SA28B	160
2SA28C	160
2SA28D	160
2SA28E	160
2SA28F	160
2SA28G	160
2SA28L	160
2SA28M	160
2SA280R	160
2SA28X	160
2SA28Y	160
2SA29	126
2SA29A	158
2SA29B	158
2SA29C	158
2SA29D	158
2SA29E	158
2SA29F	158
2SA29G	158
2SA29L	158
2SA29M	158
2SA29R	158
2SA29X	158
2SA29Y	158
2SA30	126
2SA30A	160
2SA30B	160
2SA30C	160
2SA30D	160
2SA30E	160
2SA30F	160
2SA30G	160
2SA30L	160
2SA30M	160
2SA300R	160
2SA30X	160
2SA30Y	160
2SA31	100
2SA31A	160
2SA31B	160
2SA31C	160
2SA31D	160
2SA31E	160
2SA31F	160
2SA31G	160
2SA31L	160
2SA31M	160
2SA310R	160
2SA31X	160
2SA31Y	160
2SA32	102A
2SA32A	160
2SA32B	160
2SA32C	160
2SA32D	160
2SA32E	160
2SA32F	160
2SA32G	160
2SA32L	160
2SA32M	160
2SA320R	160
2SA32X	160
2SA32Y	160
2SA33	102A
2SA33SP	290A
2SA33SSJ	290A
2SA35	126
2SA35A	160
2SA35B	160
2SA35C	160
2SA35D	160
2SA35E	160
2SA35F	160
2SA35G	160
2SA35L	160
2SA35M	160
2SA350R	160
2SA35X	160
2SA35Y	160
2SA36	100
2SA36A	160
2SA36B	160
2SA36C	160
2SA36D	160
2SA36E	160
2SA36F	160
2SA36G	160
2SA36L	160
2SA36M	160
2SA360R	160
2SA36R	160
2SA36X	160
2SA36Y	160
2SA37	126
2SA37A	160
2SA37B	160
2SA37C	160
2SA37D	160
2SA37E	160
2SA37F	160
2SA37G	160
2SA37L	160
2SA37M	160
2SA370R	160
2SA37R	160
2SA37X	160
2SA37Y	160
2SA38	126
2SA38A	160
2SA38B	160
2SA38C	160
2SA38D	160
2SA38E	160
2SA38F	160
2SA38G	160
2SA38L	160
2SA38M	160
2SA380R	160
2SA38R	160
2SA38X	160
2SA38Y	160
2SA39	126
2SA39A	160
2SA39B	160
2SA39C	160
2SA39D	160
2SA39E	160
2SA39F	160
2SA39G	160
2SA39L	160
2SA39M	160
2SA390R	160
2SA39R	160
2SA39X	160
2SA39Y	160
2SA40	100
2SA40A	160
2SA40B	160
2SA40C	160
2SA40D	160
2SA40E	160
2SA40F	160
2SA40G	160
2SA40L	160
2SA40M	160
2SA400R	160
2SA40R	160
2SA40X	160
2SA40Y	160
2SA41	160
2SA41A	160
2SA41B	160
2SA41C	160
2SA41D	160
2SA41E	160
2SA41F	160
2SA41G	160
2SA41L	160
2SA41M	160
2SA410R	160
2SA41R	160
2SA41X	160
2SA41Y	160
2SA42	160
2SA43	126
2SA44	100
2SA44A	160
2SA44B	160
2SA44C	160
2SA44D	160
2SA44E	160
2SA44F	160
2SA44G	160
2SA44L	160
2SA44M	160
2SA440R	160
2SA44R	160
2SA44X	160
2SA44Y	160
2SA45	126
2SA45-1	126
2SA45-2	126
2SA45-3	126
2SA46	749
2SA47	160
2SA48	160
2SA49	126
2SA49A	160
2SA49B	160
2SA49C	160
2SA49D	160
2SA49E	160
2SA49F	160
2SA49G	160
2SA49L	160
2SA49M	160
2SA490R	160
2SA49R	160
2SA49X	160
2SA49Y	160
2SA50	102A
2SA50A	160
2SA50B	160
2SA50C	160
2SA50D	160
2SA50E	160
2SA50F	160
2SA50G	160
2SA50L	160
2SA50M	160
2SA500R	160
2SA50R	160
2SA50X	160
2SA50Y	160
2SA51	160
2SA51A	160
2SA51B	160
2SA51C	160
2SA51D	160
2SA51E	160
2SA51F	160
2SA51G	160
2SA51L	160
2SA51M	160
2SA510R	160
2SA51R	160
2SA51X	160
2SA51Y	160
2SA52	126
2SA52A	160
2SA52B	160
2SA52C	160
2SA52D	160
2SA52E	160
2SA52F	160
2SA52G	160
2SA52L	160
2SA52M	160
2SA520R	160
2SA52R	160
2SA52X	160
2SA52Y	160
2SA53	126
2SA53A	160
2SA53B	160
2SA53C	160
2SA53D	160
2SA53E	160
2SA53F	160
2SA53G	160
2SA53L	160
2SA53M	160
2SA530R	160
2SA53R	160
2SA53X	160
2SA53Y	160
2SA54	160
2SA54A	160
2SA54B	160
2SA54C	160
2SA54D	160
2SA54E	160
2SA54F	160
2SA54G	160
2SA54L	160
2SA54M	160
2SA540R	160
2SA54R	160
2SA54X	160
2SA54Y	160
2SA55	100
2SA55A	160
2SA55B	160
2SA55C	160
2SA55D	160
2SA55E	160
2SA55F	160
2SA55G	160
2SA55L	160
2SA55M	160
2SA550R	160
2SA55R	160
2SA55X	160
2SA55Y	160
2SA56	160
2SA56-Y-TM	290A
2SA56A	290A
2SA57	126
2SA57A	158
2SA57B	158
2SA57C	158
2SA57D	158
2SA57E	158
2SA57F	158
2SA57G	158
2SA57L	158
2SA57M	158
2SA57OR	158
2SA57R	158
2SA57X	158
2SA57Y	158
2SA58	126
2SA58A	160
2SA58B	160
2SA58C	160
2SA58D	160
2SA58E	160
2SA58F	160
2SA58G	160
2SA58H	160
2SA58J	160
2SA58K	160
2SA58L	160
2SA58M	160
2SA580R	160
2SA58R	160
2SA58X	160
2SA58Y	160
2SA59	126
2SA59A	160
2SA59B	160
2SA59C	160
2SA59D	160
2SA59E	160
2SA59F	160
2SA59G	160
2SA59L	160
2SA59M	160
2SA590R	160
2SA59R	160
2SA59X	160
2SA59Y	160
2SA60	126
2SA60A	160
2SA60B	160
2SA60C	160
2SA60D	160
2SA60E	160
2SA60F	160
2SA60G	160
2SA60H	160
2SA60K	160
2SA60L	160
2SA60M	160
2SA600R	160
2SA60R	160
2SA60X	160
2SA60Y	160
2SA61	160
2SA61A	160
2SA61C	160
2SA61D	160
2SA61E	160
2SA61G	160
2SA61K	160
2SA61L	160
2SA610R	160
2SA61R	160
2SA61X	160
2SA61Y	160
2SA62T	290A
2SA64	102A
2SA64A	158
2SA64B	158
2SA64C	158
2SA64D	158
2SA64E	158
2SA64F	158
2SA64G	158
2SA64GN	158
2SA64H	158
2SA64J	158
2SA64K	158
2SA64L	158
2SA64M	158
2SA640R	158
2SA64R	158
2SA64X	158
2SA64Y	158
2SA65	102A
2SA65A	160
2SA65B	160
2SA65C	160
2SA65D	160
2SA65E	160
2SA65F	160
2SA65G	160
2SA65K	160
2SA65L	160
2SA65M	160
2SA650R	160
2SA65R	160
2SA65X	160
2SA65Y	160
2SA66	102A
2SA66A	160
2SA66B	160
2SA66C	160
2SA66D	160
2SA66E	160
2SA66F	160
2SA66G	160
2SA66K	160
2SA66L	160
2SA66M	160
2SA660R	160
2SA66R	160
2SA66X	160
2SA66Y	160
2SA67	126
2SA67A	160
2SA67B	160
2SA67C	160
2SA67D	160
2SA67E	160
2SA67F	160
2SA67G	160
2SA67H	160
2SA67K	160
2SA67L	160
2SA670R	160
2SA67R	160
2SA67X	160
2SA67Y	160
2SA68	749
2SA69	126
2SA69A	160
2SA69B	160
2SA69C	160
2SA69D	160
2SA69E	160
2SA69F	160
2SA69G	160
2SA69H	160
2SA69K	160
2SA69L	160
2SA69M	160
2SA690R	160
2SA69R	160
2SA69X	160
2SA69Y	160
2SA70	160
2SA70-0B	160
2SA70-08	160
2SA70-OB	160
2SA70A	160
2SA70B	160
2SA70C	160
2SA70D	160
2SA70E	160
2SA70F	160
2SA70G	160
2SA70H	160
2SA70K	160
2SA70L	160
2SA70MA	160
2SA700A	160
2SA700R	160
2SA70R	160
2SA70X	160
2SA70Y	160
2SA71	126
2SA71A	126
2SA71AB	126
2SA71AC	126
2SA71B	126
2SA71BS	126
2SA71C	160
2SA71D	126
2SA71E	160
2SA71F	160
2SA71G	160
2SA71H	160
2SA71K	160
2SA71L	160
2SA71M	160
2SA710R	160
2SA71R	160
2SA71X	160
2SA71Y	126
2SA71YA	160
2SA72	126
2SA72BLU	126
2SA72BLU-BLU	126
2SA72BRN	126
2SA72ORN	126
2SA72WHT	126
2SA73	160
2SA73A	160
2SA73B	160
2SA73C	160
2SA73D	160
2SA73E	160
2SA73F	160
2SA73G	160
2SA73H	160
2SA73K	160
2SA73L	160
2SA73M	160
2SA730R	160
2SA73R	160
2SA73X	160
2SA73Y	160
2SA74	160
2SA74A	160
2SA74B	160
2SA74C	160
2SA74D	160
2SA74E	160
2SA74F	160
2SA74G	160
2SA74H	160
2SA74K	160
2SA74L	160
2SA74M	160
2SA740R	160
2SA74R	160
2SA74X	160
2SA74Y	160
2SA75	126
2SA75A	126
2SA75B	126
2SA75C	126
2SA75D	126
2SA75E	126
2SA75F	126
2SA75G	126
2SA75H	126
2SA75K	126
2SA75L	126
2SA75M	126
2SA750R	126
2SA75R	126
2SA75X	126
2SA75Y	126
2SA76	126
2SA76A	160
2SA76B	160
2SA76C	160
2SA76D	160
2SA76E	160
2SA76F	160
2SA76G	160
2SA76H	160
2SA76K	160
2SA76L	160
2SA760R	160
2SA76R	160
2SA76X	160
2SA76Y	160
2SA77	126
2SA77A	126
2SA77B	126
2SA77C	126
2SA77D	126
2SA77E	160
2SA77F	160
2SA77G	160
2SA77H	160
2SA77K	160
2SA77L	160
2SA77M	160
2SA770R	160
2SA77R	160
2SA77X	160
2SA77Y	160
2SA78	126
2SA78B	126
2SA78C	126
2SA78D	126
2SA79	160
2SA80	126
2SA80A	158
2SA80B	158
2SA80D	158
2SA80E	158
2SA80F	158
2SA80G	158
2SA80H	158
2SA80K	158
2SA80L	158
2SA80M	158
2SA800R	158
2SA80R	158
2SA80X	158
2SA80Y	158
2SA81	160
2SA82	126
2SA82A	158
2SA82B	158
2SA82C	158
2SA82D	158
2SA82E	158
2SA82F	158
2SA82G	158
2SA82H	158
2SA82K	158
2SA82M	158
2SA820R	158
2SA82R	158
2SA82X	158
2SA82Y	158
2SA83	126
2SA83A	160
2SA83B	160
2SA83C	160
2SA83D	160
2SA83E	160
2SA83F	160
2SA83G	160
2SA83H	160
2SA83K	160
2SA83L	160
2SA83M	160
2SA830R	160
2SA83R	160
2SA83X	160
2SA83Y	160
2SA84	160
2SA84B	160
2SA84C	160
2SA84D	160
2SA84E	160
2SA84F	160
2SA84G	160
2SA84H	160
2SA84K	160
2SA84L	160
2SA84M	160
2SA840R	160
2SA84R	160
2SA84X	160
2SA84Y	160
2SA85	126
2SA85L	158
2SA86	160
2SA87	126
2SA87A	160
2SA87B	160
2SA87C	160
2SA87D	160
2SA87E	160
2SA87F	160

PART NUMBER	NTE REPLACEMENT
2SA87G	160
2SA87H	160
2SA87K	160
2SA87L	160
2SA87M	160
2SA87OR	160
2SA87R	160
2SA87X	160
2SA87Y	160
2SA88	160
2SA88-1	87
2SA89	160
2SA90	126
2SA92	126
2SA92A	160
2SA92B	160
2SA92C	160
2SA92D	160
2SA92E	160
2SA92F	160
2SA92G	160
2SA92H	160
2SA92K	160
2SA92L	160
2SA92M	160
2SA92OR	160
2SA92R	160
2SA92X	160
2SA92Y	160
2SA93	126
2SA93A	160
2SA93B	160
2SA93C	160
2SA93E	160
2SA93F	160
2SA93G	160
2SA93H	160
2SA93K	160
2SA93L	160
2SA93M	160
2SA93OR	160
2SA93R	160
2SA93X	160
2SA93Y	160
2SA94	126
2SA94A	158
2SA94C	158
2SA94D	158
2SA94E	158
2SA94F	158
2SA94G	158
2SA94H	158
2SA94K	158
2SA94L	158
2SA94M	158
2SA94OR	158
2SA94R	158
2SA94RE	398
2SA94X	158
2SA94Y	158
2SA100	126
2SA100A	102A
2SA100B	126
2SA100C	126
2SA100D	160
2SA100E	160
2SA100F	160
2SA100G	160
2SA100H	160
2SA100J	160
2SA100K	160
2SA100M	160
2SA1000R	160
2SA100R	160
2SA100X	160
2SA100Y	160
2SA101	126
2SA101-OR	102A
2SA101A	126
2SA101AA	126
2SA101AY	126
2SA101B	126
2SA101BA	126
2SA101BB	126
2SA101BC	126
2SA101BX	126
2SA101C	126
2SA101CA	126
2SA101CV	126
2SA101CX	126
2SA101D	102A
2SA101E	126
2SA101F	102A
2SA101G	102A
2SA101H	102A
2SA101K	102A
2SA101L	102A
2SA101M	102A
2SA1010R	126
2SA101QA	126
2SA101R	102A
2SA101V	126
2SA101X	126
2SA101XBX	102A
2SA101Y	126
2SA101YA	102A
2SA101Z	126
2SA102	126
2SA102(BA)	126
2SA102-OR	126
2SA102A	126
2SA102AA	126
2SA102AB	126
2SA102B	126
2SA102BA	126
2SA102BA-2	126
2SA102BN	126
2SA102C	126
2SA102CA	126
2SA102CA-1	126
2SA102D	126
2SA102E	126
2SA102F	126
2SA102G	126
2SA102H	126
2SA102K	126
2SA102L	126
2SA102M	126
2SA1020R	126
2SA102TV	126
2SA102TV-2	126
2SA102X	126
2SA102Y	126
2SA103	126
2SA103(CA)	160
2SA103A	126
2SA103B	126
2SA103C	126
2SA103CA	126
2SA103CAK	126
2SA103CB	160
2SA103CG	126
2SA103D	160
2SA103DA	126
2SA103E	160
2SA103F	160
2SA103G	160
2SA103GA	160
2SA103K	126
2SA103L	160
2SA103M	160
2SA1030R	160
2SA103R	160
2SA103X	160
2SA103Y	160
2SA104	126
2SA104A	160
2SA104B	160
2SA104C	160
2SA104D	126
2SA104E	160
2SA104F	160
2SA104G	160
2SA104H	160
2SA104K	160
2SA104L	160
2SA104M	160
2SA1040R	160
2SA104P	126
2SA104R	160
2SA104X	160
2SA104Y	160
2SA105	160
2SA105A	158
2SA105B	158
2SA105C	158
2SA105D	158
2SA105E	158
2SA105G	158
2SA105H	158
2SA105K	158
2SA105L	158
2SA105M	158
2SA1050R	158
2SA105R	158
2SA105X	158
2SA105Y	158
2SA106	160
2SA106A	160
2SA106B	160
2SA106C	160
2SA106D	160
2SA106E	160
2SA106F	160
2SA106G	160
2SA106H	160
2SA106K	160
2SA106L	160
2SA106M	160
2SA106OR	160
2SA106R	160
2SA106X	160
2SA106Y	160
2SA107	160
2SA107A	160
2SA107B	160
2SA107C	160
2SA107D	160
2SA107E	160
2SA107F	160
2SA107G	160
2SA107H	160
2SA107K	160
2SA107L	160
2SA107M	160
2SA107OR	160
2SA107R	160
2SA107X	160
2SA107Y	160
2SA108	126
2SA108A	160
2SA108B	160
2SA108C	160
2SA108D	160
2SA108E	160
2SA108F	160
2SA108G	160
2SA108H	160
2SA108K	160
2SA108L	160
2SA108M	160
2SA108OR	160
2SA108R	160
2SA108X	160
2SA108Y	160
2SA109	126
2SA109A	160
2SA109B	160
2SA109C	160
2SA109D	160
2SA109E	160
2SA109F	160
2SA109G	160
2SA109K	160
2SA109L	160
2SA109M	160
2SA109OR	160
2SA109R	160
2SA109X	160
2SA109Y	160
2SA110	126
2SA110A	160
2SA110B	160
2SA110C	160
2SA110D	160
2SA110E	160
2SA110F	160
2SA110G	160
2SA110K	160
2SA110L	160
2SA110M	160
2SA110OR	160
2SA110R	160
2SA110X	160
2SA110Y	160
2SA111	126
2SA111A	160
2SA111B	160
2SA111C	160
2SA111D	160
2SA111E	160
2SA111F	160
2SA111G	160
2SA111K	160
2SA111L	160
2SA111M	160
2SA111OR	160
2SA111R	160
2SA111X	160
2SA111Y	160
2SA112	126
2SA112A	160
2SA112B	160
2SA112C	160
2SA112D	160
2SA112E	160
2SA112F	160
2SA112G	160
2SA112GN	160
2SA112H	160
2SA112K	160
2SA112L	160
2SA112M	160
2SA112OR	160
2SA112R	160
2SA112X	160
2SA112Y	160
2SA113	126
2SA113A	160
2SA113B	160
2SA113C	160
2SA113D	160
2SA113E	160
2SA113F	160
2SA113G	160
2SA113GN	160
2SA113H	160
2SA113J	160
2SA113L	160
2SA113M	160
2SA113R	160
2SA113X	160
2SA113Y	160
2SA114	102A
2SA114A	160
2SA114B	160
2SA114C	160
2SA114D	160
2SA114E	160
2SA114F	160
2SA114G	160
2SA114H	160
2SA114K	160
2SA114L	160
2SA114M	160
2SA114OR	160
2SA114R	160
2SA114X	160
2SA114Y	160
2SA115	126A
2SA115A	160
2SA115B	126A
2SA115C	160
2SA115D	160
2SA115E	160
2SA115F	160
2SA115G	160
2SA115GN	160
2SA115H	160
2SA115J	160
2SA115K	160
2SA115L	160
2SA115M	160
2SA115OR	160
2SA115R	160
2SA115X	160
2SA115Y	160
2SA116	102A
2SA116A	160
2SA116B	160
2SA116C	160
2SA116D	160
2SA116E	160
2SA116F	160
2SA116G	160
2SA116GN	160
2SA116H	160
2SA116J	160
2SA116K	160
2SA116L	160
2SA116M	160
2SA116OR	160
2SA116R	160
2SA116X	160
2SA116Y	160
2SA117	160
2SA117A	160
2SA117B	160
2SA117C	160
2SA117D	160
2SA117E	160
2SA117F	160
2SA117G	160
2SA117GN	160
2SA117H	160
2SA117J	160
2SA117K	160
2SA117L	160
2SA117M	160
2SA117OR	160
2SA117R	160
2SA117X	160
2SA117Y	160
2SA118	160
2SA118A	160
2SA118B	160
2SA118C	160
2SA118D	160
2SA118E	160
2SA118F	160
2SA118G	160
2SA118GN	160
2SA118H	160
2SA118J	160
2SA118K	160
2SA118L	160
2SA118M	160
2SA118OR	160
2SA118R	160
2SA118X	160
2SA118Y	160
2SA119	129
2SA120	159
2SA120A	159
2SA121	126
2SA121A	160
2SA121B	160
2SA121C	160
2SA121D	160
2SA121E	160
2SA121F	160
2SA121G	160
2SA121GN	160
2SA121H	160
2SA121J	160
2SA121K	160
2SA121L	160
2SA121M	160
2SA121OR	160
2SA121R	160
2SA121X	160
2SA121Y	160
2SA122	126
2SA122A	160
2SA122B	160
2SA122C	160
2SA122D	160
2SA122E	160
2SA122F	160
2SA122G	160
2SA122GN	160
2SA122H	160
2SA122K	160
2SA122L	160
2SA122M	160
2SA122OR	160
2SA122R	160
2SA122X	160
2SA122Y	160
2SA123	126
2SA123A	160
2SA123B	160
2SA123C	160
2SA123D	160
2SA123E	160
2SA123F	160
2SA123G	160
2SA123GN	160
2SA123H	160
2SA123J	160
2SA123K	160
2SA123L	160
2SA123M	160
2SA123OR	160
2SA123R	160
2SA123X	160
2SA123Y	160
2SA124	126
2SA124A	160
2SA124B	160
2SA124C	160
2SA124D	160
2SA124E	160
2SA124F	160
2SA124G	160
2SA124GN	160
2SA124H	160
2SA124J	160
2SA124K	160
2SA124L	160
2SA124M	160
2SA124OR	160
2SA124R	160
2SA124X	160
2SA124Y	160
2SA125	126
2SA125A	160
2SA125B	160
2SA125C	160
2SA125D	160
2SA125E	160
2SA125F	160
2SA125G	160
2SA125GN	160
2SA125H	160
2SA125J	160
2SA125K	160
2SA125L	160
2SA125M	160
2SA125OR	160
2SA125R	160
2SA125X	160
2SA125Y	160
2SA126	160
2SA127	160
2SA128	158
2SA128A	158
2SA128B	158
2SA128C	158
2SA128D	158
2SA128E	158
2SA128F	158
2SA128G	158
2SA128GN	158
2SA128H	158
2SA128J	158
2SA128K	158
2SA128L	158
2SA128M	158
2SA128OR	158
2SA128R	158
2SA128X	158
2SA128Y	158
2SA129	158
2SA129A	158
2SA129B	158
2SA129C	158
2SA129D	158
2SA129E	158
2SA129F	158
2SA129G	158
2SA129GN	158
2SA129H	158
2SA129J	158
2SA129K	158
2SA129L	158
2SA129M	158
2SA129OR	158
2SA129R	158
2SA129X	158
2SA129Y	158
2SA130	160
2SA130A	160
2SA130B	160
2SA130C	160
2SA130D	160
2SA130E	160
2SA130F	160
2SA130G	160
2SA130GN	160
2SA130H	160
2SA130J	160
2SA130K	160
2SA130L	160
2SA130M	160
2SA130OR	160
2SA130R	160
2SA130X	160
2SA130Y	160
2SA131	126
2SA131A	160
2SA131B	160
2SA131C	160
2SA131D	160
2SA131E	160
2SA131F	160
2SA131G	160
2SA131GN	160
2SA131H	160
2SA131J	160
2SA131K	160
2SA131L	160
2SA131M	160
2SA131OR	160
2SA131R	160
2SA131X	160
2SA131Y	160
2SA132	126
2SA132A	160
2SA132B	160
2SA132C	160
2SA132D	160
2SA132E	160
2SA132F	160
2SA132G	160
2SA132H	160
2SA132J	160
2SA132K	160
2SA132L	160
2SA132M	160
2SA132OR	160
2SA132X	160
2SA132Y	160
2SA133	126
2SA133A	160
2SA133B	160
2SA133C	160
2SA133D	160
2SA133E	160
2SA133F	160
2SA133G	160
2SA133GN	160
2SA133H	160
2SA133J	160
2SA133K	160
2SA133L	160
2SA133M	160
2SA133OR	160
2SA133R	160
2SA133X	160
2SA133Y	160
2SA134	126
2SA134A	160
2SA134B	160
2SA134C	160
2SA134D	160
2SA134E	160
2SA134F	160
2SA134G	160
2SA134H	160
2SA134J	160
2SA134K	160
2SA134L	160
2SA134OR	160
2SA134R	160
2SA134X	160
2SA134Y	160
2SA135	160
2SA135A	160
2SA135B	160
2SA135C	160
2SA135D	160
2SA135E	160
2SA135F	160
2SA135G	160
2SA135GN	160
2SA135H	160
2SA135J	160
2SA135K	160
2SA135L	160
2SA135M	160
2SA135OR	160
2SA135R	160
2SA135X	160
2SA135Y	160
2SA136	126
2SA136A	160
2SA136B	160
2SA136C	160
2SA136D	160
2SA136E	160
2SA136F	160
2SA136G	160
2SA136GN	160
2SA136H	160
2SA136J	160
2SA136K	160
2SA136L	160
2SA136M	160
2SA136OR	160
2SA136R	160
2SA136X	160
2SA136Y	160
2SA137	126
2SA137A	160
2SA137B	160
2SA137C	160
2SA137D	160
2SA137E	160
2SA137F	160
2SA137G	160
2SA137GN	160
2SA137H	160
2SA137J	160
2SA137K	160
2SA137L	160
2SA137M	160
2SA137OR	160
2SA137R	160
2SA137X	160
2SA137Y	160
2SA138	102A
2SA139	126
2SA139A	160
2SA139B	160
2SA139C	160
2SA139D	160
2SA139E	160
2SA139F	160
2SA139G	160
2SA139GN	160
2SA139J	160
2SA139K	160
2SA139L	160
2SA139M	160
2SA139OR	160
2SA139R	160
2SA139X	160
2SA139Y	160
2SA141	126
2SA141A	160
2SA141B	126
2SA141C	126
2SA141D	160
2SA141E	160
2SA141F	160
2SA141G	160
2SA141GN	160
2SA141H	160
2SA141K	160
2SA141L	160
2SA141M	160
2SA141OR	160
2SA141R	160
2SA141X	160
2SA141Y	160
2SA142	126
2SA142A	126
2SA142B	126
2SA142C	126
2SA142D	126
2SA142E	126
2SA142F	126
2SA142G	126
2SA142GN	126
2SA142H	126
2SA142J	126
2SA142K	126
2SA142L	126
2SA142M	126
2SA142OR	126
2SA142R	126
2SA142X	126
2SA142Y	126
2SA143	126
2SA143A	160
2SA143B	160
2SA143C	160
2SA143D	160
2SA143E	160
2SA143F	160
2SA143G	160
2SA143GN	160
2SA143H	160
2SA143J	160
2SA143K	160
2SA143L	160
2SA143M	160
2SA143OR	160
2SA143R	160
2SA143X	160
2SA143Y	160
2SA144	126
2SA144A	160
2SA144B	160
2SA144C	126
2SA144D	160
2SA144E	160
2SA144F	160
2SA144G	160
2SA144GN	160
2SA144H	160
2SA144J	160
2SA144K	160
2SA144L	160
2SA144M	160
2SA144OR	160
2SA144R	160
2SA144X	160
2SA144Y	160
2SA145	126
2SA145A	126
2SA145B	160
2SA145C	126
2SA145D	160
2SA145E	160
2SA145G	160
2SA145GN	160
2SA145K	160
2SA145M	160
2SA145OR	160
2SA145R	160
2SA145X	160
2SA145Y	160
2SA146	100
2SA146A	160
2SA146B	160
2SA146C	160
2SA146D	160
2SA146E	160
2SA146F	160
2SA146G	160
2SA146GN	160
2SA146H	160
2SA146J	160
2SA146K	160
2SA146L	160
2SA146M	160
2SA146OR	160
2SA146X	160
2SA146Y	160
2SA147	100
2SA147A	160
2SA147B	160
2SA147C	160
2SA147D	160
2SA147E	160
2SA147F	160

PART NUMBER	NTE REPLACEMENT
2SA147G	160
2SA147H	160
2SA147J	160
2SA147K	160
2SA147L	160
2SA147M	160
2SA147OR	160
2SA147R	160
2SA147X	160
2SA147Y	160
2SA148	100
2SA148A	160
2SA148B	160
2SA148C	160
2SA148D	160
2SA148E	160
2SA148F	160
2SA148G	160
2SA148GN	160
2SA148H	160
2SA148J	160
2SA148K	160
2SA148L	160
2SA148M	160
2SA148OR	160
2SA148R	160
2SA148X	160
2SA148Y	160
2SA149	100
2SA149A	160
2SA149B	160
2SA149C	160
2SA149D	160
2SA149E	160
2SA149F	160
2SA149G	160
2SA149GN	160
2SA149H	160
2SA149J	160
2SA149K	160
2SA149L	160
2SA149M	160
2SA149OR	160
2SA149R	160
2SA149X	160
2SA149Y	160
2SA150	126
2SA150A	158
2SA150B	158
2SA150C	158
2SA150D	158
2SA150E	158
2SA150F	158
2SA150G	158
2SA150GN	158
2SA150H	158
2SA150J	158
2SA150K	158
2SA150L	158
2SA150M	158
2SA150OR	158
2SA150R	158
2SA150X	158
2SA150Y	158
2SA151	160
2SA151A	160
2SA151B	160
2SA151C	160
2SA151D	160
2SA151E	160
2SA151F	160
2SA151G	160
2SA151GN	160
2SA151H	160
2SA151J	160
2SA151K	160
2SA151L	160
2SA151M	160
2SA151OR	160
2SA151R	160
2SA151X	160
2SA151Y	160
2SA152	160
2SA152A	126
2SA152B	126
2SA152C	126
2SA152D	126
2SA152E	126
2SA152F	126
2SA152G	126
2SA152GN	126
2SA152H	126
2SA152J	126
2SA152K	126
2SA152L	126
2SA152M	126
2SA152OR	126
2SA152R	126
2SA152X	126
2SA152Y	126
2SA153	126
2SA153A	160
2SA153B	160
2SA153C	160
2SA153D	160
2SA153E	160
2SA153F	160
2SA153G	160
2SA153GN	160
2SA153H	160
2SA153J	160
2SA153K	160
2SA153L	160
2SA153M	160
2SA153OR	160
2SA153R	160
2SA153X	160
2SA153Y	160
2SA154	126
2SA154A	160
2SA154B	160
2SA154C	160
2SA154D	160
2SA154E	160
2SA154F	160
2SA154G	160
2SA154GN	160
2SA154H	160
2SA154J	160
2SA154K	160
2SA154L	160
2SA154M	160
2SA154OR	160
2SA154R	160
2SA154X	160
2SA154Y	160
2SA155	126
2SA155A	160
2SA155B	160
2SA155C	160
2SA155D	160
2SA155E	160
2SA155F	160
2SA155G	160
2SA155GN	160
2SA155H	160
2SA155J	160
2SA155K	160
2SA155L	160
2SA155M	160
2SA155OR	160
2SA155R	160
2SA155X	160
2SA155Y	160
2SA156	126
2SA156A	160
2SA156B	160
2SA156C	160
2SA156D	160
2SA156E	160
2SA156F	160
2SA156G	160
2SA156GN	160
2SA156H	160
2SA156J	160
2SA156K	160
2SA156L	160
2SA156M	160
2SA156OR	160
2SA156R	160
2SA156X	160
2SA156Y	160
2SA157	126
2SA157A	160
2SA157B	160
2SA157C	160
2SA157D	160
2SA157E	160
2SA157F	160
2SA157G	160
2SA157GN	160
2SA157H	160
2SA157J	160
2SA157K	160
2SA157L	160
2SA157M	160
2SA157OR	160
2SA157R	160
2SA157X	160
2SA157Y	160
2SA159	126
2SA159A	160
2SA159B	160
2SA159C	160
2SA159D	160
2SA159E	160
2SA159F	160
2SA159G	160
2SA159GN	160
2SA159H	160
2SA159J	160
2SA159K	160
2SA159L	160
2SA159M	160
2SA159OR	160
2SA159R	160
2SA159X	160
2SA159Y	160
2SA160	100
2SA160A	160
2SA160B	160
2SA160C	160
2SA160D	160
2SA160E	160
2SA160F	160
2SA160GN	160
2SA160H	160
2SA160J	160
2SA160K	160
2SA160L	160
2SA160M	160
2SA160OR	160
2SA160R	160
2SA160X	160
2SA160Y	160
2SA161	126
2SA161A	160
2SA161B	160
2SA161C	160
2SA161D	160
2SA161E	160
2SA161F	160
2SA161G	160
2SA161GN	160
2SA161H	160
2SA161J	160
2SA161K	160
2SA161L	160
2SA161M	160
2SA161OR	160
2SA161R	160
2SA161X	160
2SA161Y	160
2SA162	126
2SA162A	160
2SA162B	160
2SA162C	160
2SA162D	160
2SA162E	160
2SA162F	160
2SA162G	160
2SA162GN	160
2SA162H	160
2SA162J	160
2SA162K	160
2SA162L	160
2SA162M	160
2SA162OR	160
2SA162R	160
2SA162X	160
2SA162Y	160
2SA163	126
2SA163A	160
2SA163B	160
2SA163C	160
2SA163D	160
2SA163E	160
2SA163F	160
2SA163G	160
2SA163GN	160
2SA163H	160
2SA163J	160
2SA163K	160
2SA163L	160
2SA163M	160
2SA163OR	160
2SA163R	160
2SA163X	160
2SA163Y	160
2SA164	126
2SA164A	160
2SA164B	160
2SA164C	160
2SA164D	160
2SA164E	160
2SA164F	160
2SA164G	160
2SA164GN	160
2SA164H	160
2SA164J	160
2SA164K	160
2SA164L	160
2SA164M	160
2SA164OR	160
2SA164R	160
2SA164X	160
2SA164Y	160
2SA165	126
2SA165A	160
2SA165B	160
2SA165C	160
2SA165D	160
2SA165E	160
2SA165F	160
2SA165G	160
2SA165GN	160
2SA165H	160
2SA165J	160
2SA165K	160
2SA165L	160
2SA165M	160
2SA165OR	160
2SA165R	160
2SA165X	160
2SA165Y	160
2SA166	126
2SA166A	160
2SA166B	160
2SA166C	160
2SA166D	160
2SA166E	160
2SA166F	160
2SA166G	160
2SA166GN	160
2SA166H	160
2SA166J	160
2SA166K	160
2SA166L	160
2SA166M	160
2SA166OR	160
2SA166R	160
2SA166X	160
2SA166Y	160
2SA167	100
2SA167A	160
2SA167B	160
2SA167C	160
2SA167D	160
2SA167E	160
2SA167F	160
2SA167G	160
2SA167GN	160
2SA167H	160
2SA167J	160
2SA167K	160
2SA167L	160
2SA167M	160
2SA167OR	160
2SA167R	160
2SA167X	160
2SA167Y	160
2SA168	100
2SA168A	100
2SA168B	160
2SA168C	160
2SA168D	160
2SA168E	160
2SA168F	160
2SA168G	160
2SA168GN	160
2SA168H	160
2SA168J	160
2SA168K	160
2SA168L	160
2SA168M	160
2SA168OR	160
2SA168R	160
2SA168X	160
2SA168Y	160
2SA169	100
2SA169A	160
2SA169B	160
2SA169C	160
2SA169D	160
2SA169E	160
2SA169F	160
2SA169G	160
2SA169GN	160
2SA169H	160
2SA169J	160
2SA169K	160
2SA169L	160
2SA169M	160
2SA169OR	160
2SA169R	160
2SA169X	160
2SA169Y	160
2SA170	100
2SA170A	160
2SA170B	160
2SA170C	160
2SA170D	160
2SA170E	160
2SA170F	160
2SA170G	160
2SA170GN	160
2SA170H	160
2SA170J	160
2SA170K	160
2SA170L	160
2SA170M	160
2SA170OR	160
2SA170R	160
2SA170X	160
2SA170Y	160
2SA171	100
2SA171A	160
2SA171B	160
2SA171C	160
2SA171D	160
2SA171E	160
2SA171F	160
2SA171G	160
2SA171GN	160
2SA171H	160
2SA171J	160
2SA171K	160
2SA171L	160
2SA171M	160
2SA171OR	160
2SA171R	160
2SA171X	160
2SA171Y	160
2SA172	100
2SA172A	100
2SA172B	160
2SA172C	160
2SA172D	160
2SA172E	160
2SA172F	160
2SA172G	160
2SA172GN	160
2SA172H	160
2SA172J	160
2SA172K	160
2SA172L	160
2SA172M	160
2SA172OR	160
2SA172R	160
2SA172X	160
2SA172Y	160
2SA173	102A
2SA173A	160
2SA173B	102A
2SA173C	160
2SA173D	160
2SA173E	160
2SA173F	160
2SA173G	160
2SA173GN	160
2SA173H	160
2SA173J	160
2SA173K	160
2SA173L	160
2SA173M	160
2SA173OR	160
2SA173R	160
2SA173X	160
2SA173Y	160
2SA174	102
2SA174A	160
2SA174B	160
2SA174C	160
2SA174D	160
2SA174E	160
2SA174F	160
2SA174G	160
2SA174GN	160
2SA174H	160
2SA174J	160
2SA174K	160
2SA174L	160
2SA174M	160
2SA174OR	160
2SA174R	160
2SA174X	160
2SA174Y	160
2SA175	126
2SA175A	160
2SA175B	160
2SA175C	160
2SA175D	160
2SA175E	160
2SA175F	160
2SA175G	160
2SA175GN	160
2SA175H	160
2SA175J	160
2SA175K	160
2SA175L	160
2SA175M	160
2SA175OR	160
2SA175R	160
2SA175X	160
2SA175Y	160
2SA176	126
2SA176A	158
2SA176B	158
2SA176C	158
2SA176D	158
2SA176E	158
2SA176F	158
2SA176G	158
2SA176GN	158
2SA176H	158
2SA176J	158
2SA176K	158
2SA176L	158
2SA176M	158
2SA176OR	158
2SA176R	158
2SA176X	158
2SA176Y	158
2SA178	160
2SA180	160
2SA180A	160
2SA180B	160
2SA180C	160
2SA180D	160
2SA180E	160
2SA180F	160
2SA180G	160
2SA180GN	160
2SA180H	160
2SA180J	160
2SA180K	160
2SA180L	160
2SA180M	160
2SA180OR	160
2SA180R	160
2SA180X	160
2SA180Y	160
2SA181	102A
2SA181A	160
2SA181B	160
2SA181C	160
2SA181D	160
2SA181E	160
2SA181F	160
2SA181G	160
2SA181GN	160
2SA181H	160
2SA181J	160
2SA181K	160
2SA181L	160
2SA181M	160
2SA181OR	160
2SA181R	160
2SA181X	160
2SA181Y	160
2SA182	100
2SA182A	160
2SA182B	160
2SA182C	160
2SA182D	160
2SA182E	160
2SA182F	160
2SA182G	160
2SA182GN	160
2SA182H	160
2SA182J	160
2SA182K	160
2SA182L	160
2SA182M	160
2SA182OR	160
2SA182R	160
2SA182X	160
2SA182Y	160
2SA183	102A
2SA183A	160
2SA183B	160
2SA183C	160
2SA183D	160
2SA183E	160
2SA183F	160
2SA183G	160
2SA183GN	160
2SA183H	160
2SA183J	160
2SA183K	160
2SA183L	160
2SA183M	160
2SA183OR	160
2SA183R	160
2SA183X	160
2SA183Y	160
2SA184	160
2SA186	158
2SA187TV	102A
2SA188	126
2SA188A	160
2SA188B	160
2SA188C	160
2SA188D	160
2SA188E	160
2SA188F	160
2SA188G	160
2SA188GN	160
2SA188H	160
2SA188J	160
2SA188K	160
2SA188L	160
2SA188M	160
2SA188OR	160
2SA188R	160
2SA188X	160
2SA188Y	160
2SA189	126
2SA189A	160
2SA189B	160
2SA189C	160
2SA189D	160
2SA189E	160
2SA189F	160
2SA189G	160
2SA189GN	160
2SA189H	160
2SA189J	160
2SA189K	160
2SA189L	160
2SA189M	160
2SA189OR	160
2SA189R	160
2SA189X	160
2SA189Y	160
2SA190	160
2SA191	160
2SA192	160
2SA193	160
2SA194	160
2SA195	160
2SA196	160
2SA197	102
2SA197A	160
2SA197B	160
2SA197C	160
2SA197D	160
2SA197E	160
2SA197F	160
2SA197G	160
2SA197GN	160
2SA197H	160
2SA197J	160
2SA197K	160
2SA197L	160
2SA197M	160
2SA197OR	160
2SA197R	160
2SA197X	160
2SA197Y	160
2SA198	100
2SA198A	160
2SA198B	160
2SA198C	160
2SA198D	160
2SA198E	160
2SA198F	160
2SA198G	160
2SA198GN	160
2SA198H	160
2SA198J	160
2SA198K	160
2SA198L	160
2SA198M	160
2SA198OR	160
2SA198R	160
2SA198X	160
2SA198Y	160
2SA199	160
2SA200	158
2SA201	126
2SA201-0	126
2SA201-N	126
2SA201-0	126
2SA201-OR	126
2SA201A	126
2SA201B	126
2SA201CL	126
2SA201D	126
2SA201E	126
2SA201F	126
2SA201G	126
2SA201GN	126
2SA201H	126
2SA201J	126
2SA201K	126
2SA201L	126
2SA201M	126
2SA201N	126
2SA201O	126
2SA201OR	126
2SA201R	126
2SA201TV	126
2SA201TV0	126
2SA201TVO	126
2SA201X	126
2SA201Y	126
2SA202	126
2SA202-OR	126
2SA202A	126
2SA202AP	126
2SA202B	126
2SA202C	126
2SA202D	126
2SA202D-4	126
2SA202E	126
2SA202F	126
2SA202G	126
2SA202GN	126
2SA202H	126
2SA202J	126
2SA202K	126
2SA202L	126
2SA202M	126
2SA202OR	126
2SA202R	126
2SA202X	126
2SA202Y	126
2SA203	126
2SA203A	126
2SA203AA	126
2SA203B	126
2SA203C	126
2SA203D	126
2SA203P	126
2SA204	100
2SA204A	160
2SA204B	160
2SA204C	160
2SA204D	160
2SA204E	160
2SA204F	160
2SA204G	160
2SA204GN	160
2SA204H	160
2SA204J	160
2SA204K	160
2SA204L	160
2SA204M	160
2SA204OR	160
2SA204R	160
2SA204X	160
2SA204Y	160
2SA205	100
2SA205A	160
2SA205B	160
2SA205C	160
2SA205D	160
2SA205E	160
2SA205F	160
2SA205G	160
2SA205GN	160
2SA205H	160
2SA205J	160
2SA205K	160
2SA205L	160
2SA205M	160
2SA205OR	160
2SA205R	160
2SA205X	160
2SA205Y	160
2SA206	100
2SA206A	160
2SA206B	160
2SA206C	160
2SA206D	160
2SA206E	160
2SA206F	160
2SA206G	160
2SA206GN	160
2SA206H	160
2SA206J	160
2SA206K	160
2SA206L	160
2SA206M	160
2SA206OR	160
2SA206R	160
2SA206X	160
2SA206Y	160
2SA207	100
2SA207A	160
2SA207B	160
2SA207C	160
2SA207D	160
2SA207E	160
2SA207F	160
2SA207G	160
2SA207GN	160
2SA207H	160
2SA207J	160
2SA207K	160
2SA207L	160
2SA207M	160
2SA207OR	160
2SA207R	160
2SA207X	160
2SA207Y	160
2SA208	100

PART NUMBER	NTE REPLACEMENT
2SA208A	160
2SA208B	160
2SA208C	160
2SA208D	160
2SA208E	160
2SA208F	160
2SA208G	160
2SA208GN	160
2SA208H	160
2SA208J	160
2SA208K	160
2SA208L	160
2SA208M	160
2SA208OR	160
2SA208R	160
2SA208X	160
2SA208Y	160
2SA209	100
2SA209A	160
2SA209B	160
2SA209C	160
2SA209D	160
2SA209E	160
2SA209F	160
2SA209G	160
2SA209GN	160
2SA209H	160
2SA209J	160
2SA209K	160
2SA209L	160
2SA209M	160
2SA209OR	160
2SA209R	160
2SA209X	160
2SA209Y	160
2SA210	100
2SA210A	160
2SA210B	160
2SA210C	160
2SA210D	160
2SA210E	160
2SA210F	160
2SA210G	160
2SA210GN	160
2SA210H	160
2SA210J	160
2SA210K	160
2SA210L	160
2SA210M	160
2SA210OR	160
2SA210R	160
2SA210X	160
2SA210Y	160
2SA211	100
2SA211A	160
2SA211B	160
2SA211C	160
2SA211D	160
2SA211E	160
2SA211F	160
2SA211G	160
2SA211GN	160
2SA211H	160
2SA211J	160
2SA211K	160
2SA211L	160
2SA211M	160
2SA211OR	160
2SA211R	160
2SA211X	160
2SA211Y	160
2SA212	100
2SA212A	160
2SA212B	160
2SA212C	160
2SA212D	160
2SA212E	160
2SA212F	160
2SA212G	160
2SA212GN	160
2SA212H	160
2SA212J	160
2SA212K	160
2SA212L	160
2SA212M	160
2SA212OR	160
2SA212R	160
2SA212X	160
2SA212Y	160
2SA213	126
2SA213A	160
2SA213B	160
2SA213C	160
2SA213D	160
2SA213E	160
2SA213F	160
2SA213G	160
2SA213GN	160
2SA213H	160
2SA213J	160
2SA213K	160
2SA213L	160
2SA213M	160
2SA213OR	160
2SA213R	160
2SA213X	160
2SA213Y	160
2SA214	126
2SA214A	160
2SA214B	160
2SA214C	160
2SA214D	160
2SA214E	160
2SA214F	160
2SA214G	160
2SA214GN	160
2SA214H	160
2SA214J	160
2SA214K	160
2SA214L	160
2SA214M	160
2SA214OR	160
2SA214R	160
2SA214X	160
2SA214Y	160
2SA215	160
2SA215A	160
2SA215B	160
2SA215C	160
2SA215D	160
2SA215E	160
2SA215F	160
2SA215G	160
2SA215GN	160
2SA215H	160
2SA215J	160
2SA215K	160
2SA215L	160
2SA215M	160
2SA215OR	160
2SA215R	160
2SA215X	160
2SA215Y	160
2SA216	126
2SA216A	160
2SA216B	160
2SA216C	160
2SA216D	160
2SA216E	160
2SA216F	160
2SA216G	160
2SA216GN	160
2SA216H	160
2SA216J	160
2SA216K	160
2SA216L	160
2SA216M	160
2SA216OR	160
2SA216R	160
2SA216X	160
2SA216Y	160
2SA217	100
2SA217A	160
2SA217B	160
2SA217C	160
2SA217D	160
2SA217E	160
2SA217F	160
2SA217G	160
2SA217GN	160
2SA217H	160
2SA217J	160
2SA217K	160
2SA217L	160
2SA217M	160
2SA217OR	160
2SA217R	160
2SA217X	160
2SA217Y	160
2SA218	160
2SA218A	160
2SA218B	160
2SA218C	160
2SA218D	160
2SA218E	160
2SA218F	160
2SA218G	160
2SA218GN	160
2SA218H	160
2SA218J	160
2SA218K	160
2SA218L	160
2SA218M	160
2SA218OR	160
2SA218R	160
2SA218X	160
2SA218Y	160
2SA219	160
2SA219A	160
2SA219B	160
2SA219C	160
2SA219D	160
2SA219E	160
2SA219F	160
2SA219G	160
2SA219GN	160
2SA219H	160
2SA219J	160
2SA219K	160
2SA219L	160
2SA219M	160
2SA219OR	160
2SA219R	160
2SA219X	160
2SA219Y	160
2SA220	160
2SA220A	158
2SA220B	158
2SA220C	158
2SA220D	158
2SA220E	158
2SA220F	158
2SA220G	158
2SA220GN	158
2SA220H	158
2SA220J	158
2SA220K	158
2SA220L	158
2SA220M	158
2SA220OR	158
2SA220R	158
2SA220X	158
2SA220Y	160
2SA221	160
2SA221-OR	158
2SA221A	158
2SA221B	158
2SA221C	158
2SA221D	158
2SA221E	158
2SA221F	158
2SA221G	158
2SA221GN	158
2SA221H	158
2SA221J	158
2SA221K	158
2SA221L	158
2SA221M	158
2SA221OR	158
2SA221R	158
2SA221X	158
2SA221Y	158
2SA222	160
2SA222A	158
2SA222B	158
2SA222C	158
2SA222D	158
2SA222E	158
2SA222F	158
2SA222G	158
2SA222GN	158
2SA222H	158
2SA222J	158
2SA222K	158
2SA222L	158
2SA222M	158
2SA222OR	158
2SA222R	158
2SA222X	158
2SA222Y	158
2SA223	160
2SA223A	160
2SA223B	160
2SA223C	160
2SA223D	160
2SA223E	160
2SA223F	160
2SA223G	160
2SA223GN	160
2SA223H	160
2SA223J	160
2SA223K	160
2SA223L	160
2SA223M	160
2SA223OR	160
2SA223R	160
2SA223X	160
2SA223Y	160
2SA224	160
2SA224A	158
2SA224B	158
2SA224C	158
2SA224D	158
2SA224E	158
2SA224F	158
2SA224G	158
2SA224GN	158
2SA224H	158
2SA224J	158
2SA224K	158
2SA224L	158
2SA224M	158
2SA224OR	158
2SA224R	158
2SA224X	158
2SA224Y	158
2SA225	160
2SA225A	160
2SA225B	160
2SA225C	160
2SA225D	160
2SA225E	160
2SA225F	160
2SA225G	160
2SA225GN	160
2SA225H	160
2SA225J	160
2SA225K	160
2SA225L	160
2SA225M	160
2SA225OR	160
2SA225R	160
2SA225X	160
2SA225Y	160
2SA226	160
2SA227	160
2SA227A	160
2SA227B	160
2SA227C	160
2SA227D	160
2SA227E	160
2SA227F	160
2SA227G	160
2SA227GN	160
2SA227H	160
2SA227J	160
2SA227K	160
2SA227L	160
2SA227M	160
2SA227OR	160
2SA227R	160
2SA227X	160
2SA227Y	160
2SA228	160
2SA229	160
2SA229A	160
2SA229B	160
2SA229C	160
2SA229D	160
2SA229E	160
2SA229F	160
2SA229G	160
2SA229GN	160
2SA229H	160
2SA229J	160
2SA229K	160
2SA229L	160
2SA229OR	160
2SA229R	160
2SA229X	160
2SA229Y	160
2SA230	160
2SA230A	160
2SA230B	160
2SA230C	160
2SA230D	160
2SA230E	160
2SA230F	160
2SA230G	160
2SA230GN	160
2SA230H	160
2SA230J	160
2SA230K	160
2SA230L	160
2SA230M	160
2SA230OR	160
2SA230R	160
2SA230X	160
2SA230Y	160
2SA231	158
2SA232	158
2SA233	160
2SA233A	160
2SA233B	160
2SA233C	160
2SA233D	160
2SA233E	160
2SA233F	160
2SA233G	160
2SA233GN	160
2SA233H	160
2SA233J	160
2SA233K	160
2SA233L	160
2SA233M	160
2SA233OR	160
2SA233R	160
2SA233X	160
2SA233Y	160
2SA234	160
2SA234A	160
2SA234B	160
2SA234C	160
2SA234D	160
2SA234E	160
2SA234F	160
2SA234G	160
2SA234GN	160
2SA234H	160
2SA234J	160
2SA234K	160
2SA234L	160
2SA234M	160
2SA234OR	160
2SA234R	160
2SA234X	160
2SA234Y	160
2SA235	160
2SA235A	160
2SA235A57B2-14	160
2SA235B	160
2SA235C	160
2SA235C57B2-13	160
2SA235D	160
2SA235E	160
2SA235F	160
2SA235G	160
2SA235GN	160
2SA235H	160
2SA235K	160
2SA235M	160
2SA235OR	160
2SA235R	160
2SA235X	160
2SA235Y	160
2SA236	126
2SA236A	160
2SA236B	160
2SA236C	160
2SA236D	160
2SA236E	160
2SA236F	160
2SA236G	160
2SA236GN	160
2SA236H	160
2SA236J	160
2SA236K	160
2SA236L	160
2SA236M	160
2SA236OR	160
2SA236R	160
2SA236X	160
2SA236Y	160
2SA237	126
2SA237A	158
2SA237B	158
2SA237C	158
2SA237D	158
2SA237E	158
2SA237F	158
2SA237G	158
2SA237GN	158
2SA237H	158
2SA237J	158
2SA237K	158
2SA237L	158
2SA237M	158
2SA237OR	158
2SA237R	158
2SA237X	158
2SA237Y	158
2SA238	126
2SA238A	160
2SA238B	160
2SA238C	160
2SA238D	160
2SA238E	160
2SA238F	160
2SA238G	160
2SA238GN	160
2SA238H	160
2SA238J	160
2SA238K	160
2SA238L	160
2SA239	160
2SA239A	160
2SA239B	160
2SA239C	160
2SA239D	160
2SA239E	160
2SA239F	160
2SA239G	160
2SA239GN	160
2SA239GREEN	160
2SA239H	160
2SA239J	160
2SA239K	160
2SA239L	160
2SA239M	160
2SA239OR	160
2SA239R	160
2SA239RED	160
2SA239X	160
2SA239Y	160
2SA240	160
2SA240A	160
2SA240B	160
2SA240B2	160
2SA240BL	160
2SA240C	160
2SA240D	160
2SA240E	160
2SA240F	160
2SA240G	160
2SA240GN	160
2SA240GREEN	160
2SA240H	160
2SA240J	160
2SA240K	160
2SA240L	160
2SA240M	160
2SA240OR	160
2SA240R	160
2SA240RED	160
2SA240X	160
2SA240Y	160
2SA241	160
2SA241A	160
2SA241B	160
2SA241C	160
2SA241D	160
2SA241E	160
2SA241F	160
2SA241G	160
2SA241GN	160
2SA241H	160
2SA241J	160
2SA241K	160
2SA241L	160
2SA241M	160
2SA241OR	160
2SA241R	160
2SA241X	160
2SA241Y	160
2SA242	160
2SA243	160
2SA243A	749
2SA244	160
2SA244A	160
2SA245	160
2SA246	126
2SA246A	160
2SA246B	160
2SA246C	160
2SA246D	160
2SA246E	160
2SA246F	160
2SA246G	160
2SA246GN	160
2SA246H	160
2SA246J	160
2SA246K	160
2SA246L	160
2SA246M	160
2SA246OR	160
2SA246R	160
2SA246V	126
2SA246X	160
2SA246Y	160
2SA247	126
2SA247A	160
2SA247B	160
2SA247C	160
2SA247D	160
2SA247E	160
2SA247F	160
2SA247G	160
2SA247GN	160
2SA247H	160
2SA247J	160
2SA247K	160
2SA247L	160
2SA247M	160
2SA247OR	160
2SA247R	160
2SA247X	160
2SA247Y	160
2SA248	100
2SA248A	160
2SA248B	160
2SA248C	160
2SA248D	160
2SA248E	160
2SA248F	160
2SA248G	160
2SA248GN	160
2SA248H	160
2SA248J	160
2SA248K	160
2SA248L	160
2SA248M	160
2SA248OR	160
2SA248R	160
2SA248X	160
2SA248Y	160
2SA250	126
2SA250A	158
2SA250B	158
2SA250C	158
2SA250D	158
2SA250E	158
2SA250F	158
2SA250G	158
2SA250GN	158
2SA250H	158
2SA250J	158
2SA250L	158
2SA250M	158
2SA250OR	158
2SA250X	158
2SA250Y	158
2SA251	126
2SA251A	160
2SA251B	160
2SA251C	160
2SA251D	160
2SA251E	160
2SA251F	160
2SA251G	160
2SA251H	160
2SA251J	160
2SA251K	160
2SA251L	160
2SA251M	160
2SA251OR	160
2SA251R	160
2SA251X	160
2SA251Y	160
2SA252	126
2SA252A	160
2SA252B	160
2SA252C	160
2SA252D	160
2SA252E	160
2SA252F	160
2SA252G	160
2SA252H	160
2SA252J	160
2SA252K	160
2SA252L	160
2SA252M	160
2SA252OR	160
2SA252R	160
2SA252X	160
2SA252Y	160
2SA253	126
2SA253A	160
2SA253B	160
2SA253C	160
2SA253D	160
2SA253E	160
2SA253F	160
2SA253G	160
2SA253GN	160
2SA253H	160
2SA253J	160
2SA253K	160
2SA253L	160
2SA253M	160
2SA253OR	160
2SA253R	160
2SA253X	160
2SA253Y	160
2SA254	126
2SA254A	160
2SA254B	160
2SA254C	160
2SA254D	160
2SA254E	160
2SA254F	160
2SA254G	160
2SA254H	160
2SA254J	160
2SA254K	160
2SA254L	160
2SA254M	160
2SA254OR	160
2SA254R	160
2SA254X	160
2SA254Y	160
2SA255	126
2SA255A	160
2SA255B	160
2SA255C	160
2SA255D	160
2SA255E	160
2SA255F	160
2SA255G	160
2SA255GN	160
2SA255H	160
2SA255J	160
2SA255K	160
2SA255L	160
2SA255M	160
2SA255OR	160
2SA255R	160
2SA255X	160
2SA255Y	160
2SA256	126
2SA256A	158
2SA256B	158
2SA256C	158
2SA256D	158
2SA256E	158
2SA256F	158
2SA256G	158
2SA256GN	158
2SA256H	158
2SA256J	158
2SA256K	158
2SA256L	158
2SA256M	158
2SA256OR	158
2SA256R	158
2SA256X	158
2SA256Y	158
2SA257	126
2SA257A	126
2SA257B	126
2SA257C	126
2SA257D	126
2SA257E	126
2SA257F	126
2SA257G	126
2SA257GN	126
2SA257H	126
2SA257J	126
2SA257K	126
2SA257L	126
2SA257OR	126
2SA257R	126
2SA257X	126
2SA257Y	126
2SA258	126
2SA258A	126
2SA258B	126
2SA258C	126
2SA258D	126
2SA258E	126
2SA258F	126
2SA258G	126
2SA258GN	126
2SA258H	126
2SA258J	126
2SA258K	126
2SA258L	126
2SA258M	126
2SA258OR	126
2SA258R	126
2SA258X	126
2SA258Y	126
2SA259	126
2SA259B	158
2SA259C	158
2SA259D	158
2SA259E	158
2SA259F	158
2SA259G	158
2SA259GN	158
2SA259H	158
2SA259J	158
2SA259L	158
2SA259M	158
2SA259OR	158
2SA259R	158
2SA259X	158
2SA259Y	158
2SA260	126
2SA260A	160
2SA260B	160
2SA260C	160
2SA260D	160
2SA260E	160
2SA260F	160
2SA260G	160
2SA260GN	160
2SA260H	160
2SA260J	160
2SA260K	160
2SA260L	160
2SA260M	160
2SA260OR	160
2SA260R	160
2SA260X	160
2SA260Y	160
2SA261	126
2SA261A	160
2SA261B	160

PART NUMBER	NTE REPLACEMENT
2SA261C	160
2SA261D	160
2SA261E	160
2SA261F	160
2SA261G	160
2SA261GN	160
2SA261H	160
2SA261K	160
2SA261L	160
2SA261M	160
2SA261OR	160
2SA261R	160
2SA261X	160
2SA261Y	160
2SA262	126
2SA262A	160
2SA262B	160
2SA262C	160
2SA262D	160
2SA262E	160
2SA262F	160
2SA262G	160
2SA262GN	160
2SA262H	160
2SA262J	160
2SA262K	160
2SA262L	160
2SA262M	160
2SA262OR	160
2SA262R	160
2SA262X	160
2SA262Y	160
2SA263	126
2SA263A	160
2SA263B	160
2SA263C	160
2SA263D	160
2SA263E	160
2SA263F	160
2SA263G	160
2SA263GN	160
2SA263H	160
2SA263J	160
2SA263K	160
2SA263L	160
2SA263M	160
2SA263OR	160
2SA263R	160
2SA263X	160
2SA263Y	160
2SA264	126
2SA264(1)	160
2SA264A	160
2SA264B	160
2SA264C	160
2SA264D	160
2SA264E	160
2SA264F	160
2SA264G	160
2SA264GN	160
2SA264H	160
2SA264K	160
2SA264L	160
2SA264M	160
2SA264OR	160
2SA264R	160
2SA264X	160
2SA264Y	160
2SA265	126
2SA265A	160
2SA265B	160
2SA265C	160
2SA265D	160
2SA265E	160
2SA265F	160
2SA265G	160
2SA265GN	160
2SA265H	160
2SA265J	160
2SA265K	160
2SA265L	160
2SA265M	160
2SA265OR	160
2SA265R	160
2SA265X	160
2SA265Y	160
2SA266	126
2SA266A	158
2SA266B	158
2SA266C	158
2SA266D	158
2SA266E	158
2SA266F	158
2SA266G	158
2SA266GN	158
2SA266GREEN	158
2SA266H	158
2SA266J	158
2SA266K	158
2SA266L	158
2SA266M	158
2SA266OR	158
2SA266R	158
2SA266X	158
2SA266Y	158
2SA267	126
2SA267A	160
2SA267B	160
2SA267C	160
2SA267D	160
2SA267E	160
2SA267F	160
2SA267G	160
2SA267GN	160
2SA267H	160
2SA267J	160
2SA267K	160
2SA267L	160
2SA267M	160
2SA267OR	160
2SA267R	160
2SA267X	160
2SA267Y	160
2SA268	126
2SA268A	160
2SA268B	160
2SA268C	160
2SA268D	160
2SA268E	160
2SA268F	160
2SA268G	160
2SA268GN	160
2SA268H	160
2SA268J	160
2SA268K	160
2SA268L	160
2SA268M	160
2SA268OR	160
2SA268R	160
2SA268X	160
2SA268Y	160
2SA269	126
2SA269A	158
2SA269B	158
2SA269C	158
2SA269D	158
2SA269E	158
2SA269F	158
2SA269GN	158
2SA269H	158
2SA269J	158
2SA269K	158
2SA269L	158
2SA269M	158
2SA269OR	158
2SA269X	158
2SA269Y	158
2SA270	126
2SA270A	160
2SA270B	160
2SA270C	160
2SA270D	160
2SA270E	160
2SA270F	160
2SA270G	160
2SA270GN	160
2SA270H	160
2SA270J	160
2SA270K	160
2SA270L	160
2SA270M	160
2SA270OR	160
2SA270Q	290A
2SA270R	160
2SA270X	160
2SA270Y	160
2SA271	126
2SA271(2)	158
2SA271(3)	158
2SA271A	158
2SA271B	158
2SA271C	158
2SA271D	158
2SA271E	158
2SA271F	158
2SA271G	158
2SA271GN	158
2SA271H	158
2SA271J	158
2SA271K	158
2SA271L	158
2SA271M	158
2SA271OR	158
2SA271R	158
2SA271X	158
2SA271Y	158
2SA272	126
2SA272A	158
2SA272B	158
2SA272C	158
2SA272D	158
2SA272E	158
2SA272F	158
2SA272G	158
2SA272GN	158
2SA272H	158
2SA272J	158
2SA272K	158
2SA272L	158
2SA272M	158
2SA272OR	158
2SA272R	158
2SA272X	158
2SA272Y	158
2SA273	126
2SA273A	158
2SA273B	158
2SA273C	158
2SA273D	158
2SA273E	158
2SA273F	158
2SA273G	158
2SA273GN	158
2SA273H	158
2SA273J	158
2SA273K	158
2SA273L	158
2SA273M	158
2SA273OR	158
2SA273X	158
2SA273Y	158
2SA274	126
2SA274A	158
2SA274B	158
2SA274C	158
2SA274D	158
2SA274E	158
2SA274F	158
2SA274G	158
2SA274GN	158
2SA274H	158
2SA274J	158
2SA274K	158
2SA274L	158
2SA274M	158
2SA274OR	158
2SA274R	158
2SA274X	158
2SA274Y	158
2SA275	126
2SA275A	158
2SA275B	158
2SA275C	158
2SA275D	158
2SA275E	158
2SA275F	158
2SA275G	158
2SA275GN	158
2SA275H	158
2SA275J	158
2SA275L	158
2SA275M	158
2SA275OR	158
2SA275R	158
2SA275X	158
2SA275Y	158
2SA276	160
2SA277	100
2SA277A	160
2SA277B	160
2SA277C	160
2SA277D	160
2SA277E	160
2SA277F	160
2SA277G	160
2SA277GN	160
2SA277H	160
2SA277J	160
2SA277K	160
2SA277L	160
2SA277M	160
2SA277OR	160
2SA277X	160
2SA277Y	160
2SA278	100
2SA278A	160
2SA278B	160
2SA278C	160
2SA278D	160
2SA278E	160
2SA278F	160
2SA278G	160
2SA278GN	160
2SA278J	160
2SA278K	160
2SA278L	160
2SA278M	160
2SA278OR	160
2SA278R	160
2SA278X	160
2SA278Y	160
2SA279	100
2SA279A	160
2SA279B	160
2SA279C	160
2SA279D	160
2SA279E	160
2SA279F	160
2SA279G	160
2SA279GN	160
2SA279H	160
2SA279J	160
2SA279K	160
2SA279L	160
2SA279OR	160
2SA279R	160
2SA279X	160
2SA279Y	160
2SA280	126
2SA280A	160
2SA280B	160
2SA280C	160
2SA280D	100
2SA280E	160
2SA280F	160
2SA280G	160
2SA280GN	160
2SA280H	160
2SA280J	160
2SA280K	160
2SA280L	160
2SA280M	160
2SA280OR	160
2SA280R	160
2SA280X	160
2SA280Y	158
2SA281	126
2SA281A	160
2SA281B	160
2SA281C	160
2SA281D	160
2SA281E	160
2SA281F	160
2SA281G	160
2SA281GN	160
2SA281H	160
2SA281J	160
2SA281K	160
2SA281L	160
2SA281M	160
2SA281OR	160
2SA281R	160
2SA281X	160
2SA281Y	160
2SA282	100
2SA282A	160
2SA282B	160
2SA282C	160
2SA282D	160
2SA282E	160
2SA282F	160
2SA282G	160
2SA282GN	160
2SA282H	160
2SA282J	160
2SA282K	160
2SA282L	160
2SA282M	160
2SA282OR	160
2SA282R	160
2SA282X	160
2SA282Y	160
2SA283	100
2SA283A	160
2SA283B	160
2SA283C	160
2SA283D	160
2SA283E	160
2SA283F	160
2SA283G	160
2SA283GN	160
2SA283H	160
2SA283J	160
2SA283K	160
2SA283L	160
2SA283M	160
2SA283OR	160
2SA283R	160
2SA283X	160
2SA283Y	160
2SA284	100
2SA284A	160
2SA284B	160
2SA284C	160
2SA284D	160
2SA284E	160
2SA284F	160
2SA284G	160
2SA284GN	160
2SA284J	160
2SA284K	160
2SA284L	160
2SA284M	160
2SA284OR	160
2SA284R	160
2SA284X	160
2SA284Y	160
2SA285	160
2SA285B	158
2SA285C	158
2SA285E	158
2SA285F	158
2SA285G	158
2SA285GN	158
2SA285H	158
2SA285J	158
2SA285L	158
2SA285M	158
2SA285OR	158
2SA285R	158
2SA285X	158
2SA285Y	158
2SA286	160
2SA286A	158
2SA286B	158
2SA286C	158
2SA286D	158
2SA286E	158
2SA286F	158
2SA286G	158
2SA286GN	158
2SA286H	158
2SA286K	158
2SA286M	158
2SA286OR	158
2SA286R	158
2SA286X	158
2SA286Y	158
2SA287	160
2SA287A	158
2SA287B	158
2SA287C	158
2SA287D	158
2SA287E	158
2SA287F	158
2SA287G	158
2SA287GN	158
2SA287H	158
2SA287J	158
2SA287K	158
2SA287L	158
2SA287M	158
2SA287OR	158
2SA287X	158
2SA287Y	158
2SA288	126
2SA288A	126
2SA288B	158
2SA288C	158
2SA288D	158
2SA288E	158
2SA288F	158
2SA288G	158
2SA288GN	158
2SA288J	158
2SA288K	158
2SA288L	158
2SA288M	158
2SA288OR	158
2SA288X	158
2SA288Y	158
2SA289	126
2SA289A	160
2SA289B	160
2SA289C	160
2SA289D	160
2SA289E	160
2SA289F	160
2SA289G	160
2SA289GN	160
2SA289H	160
2SA289J	160
2SA289K	160
2SA289L	160
2SA289M	160
2SA289OR	160
2SA289R	160
2SA289X	160
2SA289Y	160
2SA290	126
2SA290A	160
2SA290B	160
2SA290C	160
2SA290D	160
2SA290E	160
2SA290F	160
2SA290G	160
2SA290GN	160
2SA290H	160
2SA290J	160
2SA290K	160
2SA290L	160
2SA290M	160
2SA290OR	160
2SA290R	160
2SA290X	160
2SA290Y	160
2SA291	126
2SA291A	160
2SA291B	160
2SA291C	160
2SA291D	160
2SA291E	160
2SA291F	160
2SA291G	160
2SA291GN	160
2SA291H	160
2SA291J	160
2SA291K	160
2SA291L	160
2SA291M	160
2SA291OR	160
2SA291R	160
2SA291X	160
2SA291Y	160
2SA292	126
2SA292A	160
2SA292B	160
2SA292C	160
2SA292D	160
2SA292E	160
2SA292F	160
2SA292G	160
2SA292GN	160
2SA292H	160
2SA292J	160
2SA292K	160
2SA292L	160
2SA292M	160
2SA292OR	160
2SA292R	160
2SA292X	160
2SA292Y	160
2SA293	126
2SA293A	160
2SA293B	160
2SA293C	160
2SA293D	160
2SA293E	160
2SA293G	160
2SA293GN	160
2SA293H	160
2SA293J	160
2SA293K	160
2SA293L	160
2SA293M	160
2SA293OR	160
2SA293R	160
2SA293X	160
2SA293Y	160
2SA294	126
2SA294A	160
2SA294B	160
2SA294C	160
2SA294D	160
2SA294E	160
2SA294F	160
2SA294GN	160
2SA294H	160
2SA294J	160
2SA294K	160
2SA294L	160
2SA294M	160
2SA294OR	160
2SA294R	160
2SA294X	160
2SA294Y	160
2SA295	126
2SA295A	160
2SA295B	160
2SA295C	160
2SA295D	160
2SA295E	160
2SA295F	160
2SA295G	160
2SA295GN	160
2SA295H	160
2SA295J	160
2SA295K	160
2SA295L	160
2SA295OR	160
2SA295R	160
2SA295Y	160
2SA296	160
2SA296A	160
2SA296B	160
2SA296C	160
2SA296D	160
2SA296E	160
2SA296F	160
2SA296G	160
2SA296GN	160
2SA296H	160
2SA296J	160
2SA296K	160
2SA296L	160
2SA296M	160
2SA296OR	160
2SA296R	160
2SA296X	160
2SA296Y	160
2SA297	160
2SA297A	160
2SA297B	160
2SA297C	160
2SA297D	160
2SA297E	160
2SA297F	160
2SA297G	160
2SA297H	160
2SA297J	160
2SA297K	160
2SA297L	160
2SA297M	160
2SA297OR	160
2SA297R	160
2SA297X	160
2SA297Y	160
2SA298	160
2SA298A	158
2SA298B	158
2SA298C	158
2SA298D	158
2SA298E	158
2SA298F	158
2SA298G	158
2SA298GN	158
2SA298H	158
2SA298J	158
2SA298K	158
2SA298L	158
2SA298M	158
2SA298OR	158
2SA298R	158
2SA298X	158
2SA298Y	158
2SA299	160
2SA300	160
2SA301	126
2SA301A	158
2SA301B	158
2SA301C	158
2SA301D	158
2SA301E	158
2SA301F	158
2SA301G	158
2SA301GN	158
2SA301H	158
2SA301J	158
2SA301K	158
2SA301L	158
2SA301M	158
2SA301OR	158
2SA301R	158
2SA301X	158
2SA301Y	158
2SA302	102A
2SA303	102A
2SA304	102A
2SA304-RED	176
2SA304-YELLOW	176
2SA304A	176
2SA304B	176
2SA304C	176
2SA304D	176
2SA304F	176
2SA304G	176
2SA304GN	176
2SA304J	176
2SA304K	176
2SA304L	176
2SA304M	176
2SA304OR	176
2SA304R	176
2SA304X	176
2SA304Y	176
2SA305	100
2SA305-RED	126
2SA305-YELLOW	126
2SA305A	126
2SA305B	126
2SA305C	126
2SA305D	126
2SA305E	126
2SA305F	126
2SA305G	126
2SA305GN	126
2SA305H	126
2SA305J	126
2SA305K	126
2SA305L	126
2SA305M	126
2SA305OR	126
2SA305R	126
2SA305X	126
2SA305Y	126
2SA306	160
2SA307	160
2SA307A	160
2SA307B	160
2SA307C	160
2SA307D	160
2SA307E	160
2SA307F	160
2SA307G	160
2SA307GN	160
2SA307J	160
2SA307K	160
2SA307L	160
2SA307M	160
2SA307OR	160
2SA307R	160
2SA307X	160
2SA307Y	160
2SA308	126
2SA308A	160
2SA308B	160
2SA308C	160
2SA308D	160
2SA308E	160
2SA308F	160
2SA308G	160
2SA308GN	160
2SA308H	160
2SA308J	160
2SA308K	160
2SA308L	160
2SA308M	160
2SA308OR	160
2SA308R	160
2SA308X	160
2SA308Y	160
2SA309	126
2SA309A	160
2SA309B	160
2SA309C	160
2SA309D	160
2SA309E	160
2SA309F	160
2SA309G	160
2SA309GN	160
2SA309H	160
2SA309J	160
2SA309K	160
2SA309L	160
2SA309M	160
2SA309OR	160
2SA309R	160
2SA309X	160
2SA309Y	160
2SA310	126
2SA310A	160
2SA310B	160
2SA310C	160
2SA310D	160
2SA310E	160
2SA310F	160
2SA310G	160
2SA310GN	160
2SA310H	160
2SA310J	160
2SA310K	160
2SA310L	160
2SA310M	160
2SA310OR	160
2SA310R	160
2SA310X	160
2SA310Y	160
2SA311	100
2SA311A	158
2SA311B	158
2SA311C	158
2SA311D	158
2SA311E	158
2SA311F	158
2SA311G	158
2SA311GN	158
2SA311H	158
2SA311J	158
2SA311K	158
2SA311L	158
2SA311M	158
2SA311OR	158
2SA311R	158
2SA311X	158
2SA311Y	158
2SA312	100
2SA312A	158

PART NUMBER	NTE REPLACEMENT
2SA312B	158
2SA312C	158
2SA312D	158
2SA312E	158
2SA312F	158
2SA312G	158
2SA312GN	158
2SA312H	158
2SA312J	158
2SA312K	158
2SA312L	158
2SA312M	158
2SA3120R	158
2SA312R	158
2SA312X	158
2SA312Y	158
2SA313	158
2SA313-BLUE	158
2SA313-GREEN	158
2SA313-RED	158
2SA313-YELLOW	158
2SA313A	158
2SA313B	158
2SA313C	158
2SA313D	158
2SA313E	158
2SA313F	158
2SA313G	158
2SA313GN	158
2SA313H	158
2SA313J	158
2SA313K	158
2SA313L	158
2SA313M	158
2SA3130R	158
2SA313R	158
2SA313X	158
2SA313Y	158
2SA314	158
2SA314-RED	158
2SA314-YELLOW	158
2SA314A	158
2SA314B	158
2SA314C	158
2SA314D	158
2SA314E	158
2SA314F	158
2SA314G	158
2SA314GN	158
2SA314H	158
2SA314J	158
2SA314K	158
2SA314L	158
2SA314M	158
2SA3140R	158
2SA314R	158
2SA314X	158
2SA314Y	158
2SA315	158
2SA315-RED	158
2SA315-YELLOW	158
2SA315A	158
2SA315B	158
2SA315C	158
2SA315D	158
2SA315E	158
2SA315F	158
2SA315G	158
2SA315GN	158
2SA315H	158
2SA315J	158
2SA315K	158
2SA315L	158
2SA315M	158
2SA3150R	158
2SA315R	158
2SA315X	158
2SA315Y	158
2SA316	158
2SA316-RED	158
2SA316-YELLOW	158
2SA316A	158
2SA316B	158
2SA316C	158
2SA316D	158
2SA316E	158
2SA316F	158
2SA316G	158
2SA316GN	158
2SA316H	158
2SA316J	158
2SA316K	158
2SA316L	158
2SA316M	158
2SA3160R	158
2SA316R	158
2SA316X	158
2SA316Y	158
2SA321	160
2SA321-1	160
2SA321A	160
2SA321B	160
2SA321C	160
2SA321D	160
2SA321E	160
2SA321F	160
2SA321G	160
2SA321GN	160
2SA321H	160
2SA321J	160
2SA321K	160
2SA321L	160
2SA321M	160
2SA3210R	160
2SA321R	160
2SA321X	160
2SA321Y	160
2SA322	160
2SA322A	158
2SA322B	158
2SA322C	158
2SA322D	158
2SA322E	158
2SA322F	158
2SA322G	158
2SA322GN	158
2SA322H	158
2SA322K	100
2SA322L	158
2SA322M	158
2SA3220R	158
2SA322R	158
2SA322X	158
2SA322Y	158
2SA323	160
2SA323A	160
2SA323B	160
2SA323C	160
2SA323D	160
2SA323E	160
2SA323F	160
2SA323G	160
2SA323GN	160
2SA323J	160
2SA323K	160
2SA323L	160
2SA323M	160
2SA323R	160
2SA323X	160
2SA323Y	160
2SA324	160
2SA324A	160
2SA324B	160
2SA324C	160
2SA324D	160
2SA324E	160
2SA324F	160
2SA324G	160
2SA324GN	160
2SA324H	160
2SA324K	160
2SA324L	160
2SA324M	160
2SA324OR	160
2SA324R	160
2SA324X	160
2SA324Y	160
2SA325	126
2SA325A	160
2SA325B	160
2SA325D	160
2SA325E	160
2SA325G	160
2SA325GN	160
2SA325H	160
2SA325J	160
2SA325K	160
2SA325L	160
2SA325M	160
2SA3250R	160
2SA325R	160
2SA325X	160
2SA325Y	160
2SA326	126
2SA326A	160
2SA326B	160
2SA326C	160
2SA326D	160
2SA326E	160
2SA326F	160
2SA326G	160
2SA326GN	160
2SA326H	160
2SA326J	160
2SA326K	160
2SA326L	160
2SA326M	160
2SA3260R	160
2SA326R	160
2SA326X	160
2SA326Y	160
2SA327	160
2SA329	126
2SA329A	126
2SA329B	126
2SA329C	160
2SA329D	160
2SA329E	160
2SA329F	160
2SA329G	160
2SA329GN	160
2SA329H	160
2SA329J	160
2SA329K	160
2SA329L	160
2SA329M	160
2SA3290R	160
2SA329R	160
2SA329X	160
2SA329Y	160
2SA330	100
2SA330A	160
2SA330B	160
2SA330C	160
2SA330D	160
2SA330E	160
2SA330F	160
2SA330G	160
2SA330GN	160
2SA330H	160
2SA330J	160
2SA330K	160
2SA330L	160
2SA330M	160
2SA330O0R	160
2SA330X	160
2SA330Y	160
2SA331	126
2SA331A	160
2SA331B	160
2SA331C	160
2SA331D	160
2SA331E	160
2SA331F	160
2SA331G	160
2SA331GN	160
2SA331H	160
2SA331J	160
2SA331K	160
2SA331L	160
2SA331M	160
2SA3310R	160
2SA331R	160
2SA331X	160
2SA331Y	160
2SA332	100
2SA332A	158
2SA332B	158
2SA332C	158
2SA332D	158
2SA332E	158
2SA332F	158
2SA332G	158
2SA332GN	158
2SA332H	158
2SA332J	158
2SA332K	158
2SA332L	158
2SA332M	158
2SA3320R	158
2SA332R	158
2SA332X	158
2SA332Y	158
2SA335	126
2SA335A	160
2SA335B	160
2SA335C	160
2SA335D	160
2SA335E	160
2SA335F	160
2SA335G	160
2SA335GN	160
2SA335H	160
2SA335J	160
2SA335K	160
2SA335L	160
2SA335M	160
2SA3350R	160
2SA335R	160
2SA335X	160
2SA335Y	160
2SA337	126
2SA337A	160
2SA337B	160
2SA337C	160
2SA337D	160
2SA337E	160
2SA337F	160
2SA337G	160
2SA337GN	160
2SA337H	160
2SA337J	160
2SA337K	160
2SA337L	160
2SA337M	160
2SA3370R	160
2SA337R	160
2SA337X	160
2SA337Y	160
2SA338	126
2SA338A	107
2SA338B	158
2SA338C	158
2SA338D	158
2SA338E	158
2SA338F	158
2SA338G	158
2SA338GN	158
2SA338H	158
2SA338J	158
2SA338K	158
2SA338L	158
2SA338M	158
2SA3380R	158
2SA338R	158
2SA338X	158
2SA338Y	158
2SA339	126
2SA339A	160
2SA339B	160
2SA339C	160
2SA339D	160
2SA339E	160
2SA339F	160
2SA339G	160
2SA339GN	160
2SA339H	160
2SA339J	160
2SA339K	160
2SA339L	160
2SA339M	160
2SA3390R	160
2SA339R	160
2SA339X	160
2SA339Y	160
2SA340	160
2SA341	160
2SA341-0A	160
2SA341-0B	160
2SA341A	158
2SA341B	158
2SA341C	158
2SA341D	158
2SA341E	158
2SA341F	158
2SA341G	158
2SA341GN	158
2SA341H	158
2SA341J	158
2SA341K	158
2SA341L	158
2SA341M	158
2SA341O0R	158
2SA341R	158
2SA341X	158
2SA341Y	158
2SA342	160
2SA342A	160
2SA342B	160
2SA342C	160
2SA342D	160
2SA342E	160
2SA342F	160
2SA342G	160
2SA342GN	160
2SA342H	160
2SA342J	160
2SA342K	160
2SA342L	160
2SA342M	160
2SA342O0R	160
2SA342R	160
2SA342X	160
2SA342Y	160
2SA343	126
2SA343A	160
2SA343B	160
2SA343C	160
2SA343D	160
2SA343E	160
2SA343F	160
2SA343G	160
2SA343H	160
2SA343J	160
2SA343K	160
2SA343L	160
2SA343M	160
2SA343O0R	160
2SA343R	160
2SA343X	160
2SA343Y	160
2SA344	126
2SA344A	160
2SA344B	160
2SA344C	160
2SA344D	160
2SA344E	160
2SA344F	160
2SA344G	160
2SA344GN	160
2SA344H	160
2SA344J	160
2SA344K	160
2SA344L	160
2SA344M	160
2SA344O0R	160
2SA344R	160
2SA344X	160
2SA344Y	160
2SA345	160
2SA346	160
2SA347	160
2SA348	160
2SA348A	160
2SA348B	160
2SA348C	160
2SA348D	160
2SA348E	160
2SA348F	160
2SA348G	160
2SA348GN	160
2SA348H	160
2SA348J	160
2SA348K	160
2SA348L	160
2SA348M	160
2SA348O0R	160
2SA348R	160
2SA348X	160
2SA348Y	160
2SA349	160
2SA350	126
2SA350A	126
2SA350AV	160
2SA350B	160
2SA350BK	160
2SA350C	126
2SA350D	160
2SA350E	160
2SA350F	160
2SA350G	160
2SA350GN	160
2SA350H	126
2SA350J	160
2SA350K	160
2SA350L	160
2SA350M	160
2SA350O0R	160
2SA350R	126
2SA350T	126
2SA350TY	126
2SA350X	160
2SA350Y	126
2SA351	126
2SA351A	126
2SA351A-2	160
2SA351B	126
2SA351C	160
2SA351D	160
2SA351E	160
2SA351F	160
2SA351G	160
2SA351GN	160
2SA351GR	126
2SA351K	160
2SA351L	160
2SA351M	160
2SA351O0R	160
2SA351R	160
2SA351X	160
2SA351Y	160
2SA352	126
2SA352A	126
2SA352B	126
2SA352C	160
2SA352D	160
2SA352E	160
2SA352F	160
2SA352G	160
2SA352GN	160
2SA352H	160
2SA352J	160
2SA352K	160
2SA352L	160
2SA352M	160
2SA352O0R	160
2SA352R	160
2SA352X	160
2SA352Y	160
2SA353	126
2SA353-AC	126
2SA353A	126
2SA353AL	160
2SA353B	160
2SA353C	126
2SA353CL	160
2SA353D	160
2SA353E	160
2SA353F	160
2SA353G	160
2SA353GN	160
2SA353H	160
2SA353J	160
2SA353K	160
2SA353L	160
2SA353M	160
2SA353O0R	160
2SA353R	160
2SA353X	160
2SA353Y	160
2SA354	126
2SA354-B	160
2SA354A	126
2SA354B	126
2SA354BK	160
2SA354C	160
2SA354D	160
2SA354E	160
2SA354F	160
2SA354G	160
2SA354GN	160
2SA354H	160
2SA354J	160
2SA354K	160
2SA354L	160
2SA354M	160
2SA354O0R	160
2SA354R	160
2SA354X	160
2SA354Y	160
2SA355	126
2SA355A	126
2SA355B	160
2SA355C	160
2SA355D	160
2SA355E	160
2SA355F	160
2SA355G	160
2SA355H	160
2SA355J	160
2SA355K	160
2SA355L	160
2SA355M	160
2SA355O0R	160
2SA355R	160
2SA355X	160
2SA355Y	160
2SA356	126
2SA356A	160
2SA356B	160
2SA356C	160
2SA356D	160
2SA356E	160
2SA356F	160
2SA356G	160
2SA356GN	160
2SA356H	160
2SA356J	160
2SA356K	160
2SA356L	160
2SA356M	160
2SA356O0R	160
2SA356R	160
2SA357	126
2SA357A	158
2SA357B	158
2SA357C	158
2SA357D	158
2SA357E	158
2SA357F	158
2SA357G	158
2SA357GN	158
2SA357H	158
2SA357J	158
2SA357K	158
2SA357L	158
2SA357M	158
2SA3570R	158
2SA357R	158
2SA357X	158
2SA357Y	158
2SA358	126
2SA358-3	160
2SA358A	160
2SA358B	160
2SA358C	160
2SA358D	160
2SA358E	160
2SA358F	160
2SA358G	160
2SA358GN	160
2SA358H	160
2SA358J	160
2SA358K	160
2SA358L	160
2SA358M	160
2SA358OR	160
2SA358R	160
2SA358X	160
2SA358Y	160
2SA359	126
2SA359A	158
2SA359B	158
2SA359C	158
2SA359D	158
2SA359E	158
2SA359F	158
2SA359G	158
2SA359GN	158
2SA359H	158
2SA359J	158
2SA359K	158
2SA359L	158
2SA359M	158
2SA359OR	158
2SA359R	158
2SA359X	158
2SA359Y	158
2SA360	160
2SA360A	160
2SA360B	160
2SA360C	160
2SA360E	160
2SA360F	160
2SA360G	160
2SA360GN	160
2SA360H	160
2SA360J	160
2SA360K	160
2SA360L	160
2SA360M	160
2SA360OR	160
2SA360R	160
2SA360X	160
2SA360Y	160
2SA361	160
2SA361A	160
2SA361B	160
2SA361C	160
2SA361D	160
2SA361E	160
2SA361F	160
2SA361G	160
2SA361GN	160
2SA361H	160
2SA361J	160
2SA361K	160
2SA361L	160
2SA361M	160
2SA361OR	160
2SA361R	160
2SA361X	160
2SA361Y	160
2SA362	160
2SA363	160
2SA364	126
2SA364A	160
2SA364B	160
2SA364C	160
2SA364D	160
2SA364E	160
2SA364F	160
2SA364G	160
2SA364GN	160
2SA364H	160
2SA364J	160
2SA364K	160
2SA364L	160
2SA364M	160
2SA364OR	160
2SA364R	160
2SA364X	160
2SA364Y	160
2SA365	126
2SA365A	160
2SA365B	160
2SA365C	160
2SA365D	160
2SA365E	160
2SA365F	160
2SA365G	160
2SA365GN	160
2SA365H	160
2SA365J	160
2SA365K	160
2SA365L	160
2SA365M	160
2SA365OR	160
2SA365R	160
2SA365X	160
2SA365Y	160
2SA366	126
2SA366A	126
2SA366B	126
2SA366C	126
2SA366D	126
2SA366E	126
2SA366F	126
2SA366G	126
2SA366GN	126
2SA366H	126
2SA366J	126
2SA366K	126
2SA366L	126
2SA366M	126
2SA366OR	126
2SA366R	126
2SA366X	126
2SA366Y	126
2SA367	126
2SA367A	160
2SA367B	160
2SA367C	160
2SA367D	160
2SA367E	160
2SA367F	160
2SA367G	160
2SA367GN	160
2SA367H	160
2SA367J	160
2SA367K	160
2SA367L	160
2SA367M	160
2SA367OR	160
2SA367R	160
2SA367X	160
2SA367Y	160
2SA368	126
2SA368A	160
2SA368B	160
2SA368C	160
2SA368D	160
2SA368E	160
2SA368F	160
2SA368G	160
2SA368GN	160
2SA368H	160
2SA368J	160
2SA368K	160
2SA368L	160
2SA368M	160
2SA368OR	160
2SA368R	160
2SA368X	160
2SA368Y	160
2SA369	126
2SA369A	160
2SA369B	160
2SA369C	160
2SA369D	160
2SA369E	160
2SA369F	160
2SA369G	160
2SA369GN	160
2SA369H	160
2SA369J	160
2SA369K	160
2SA369L	160
2SA369M	160
2SA369OR	160
2SA369R	160
2SA369X	160
2SA369Y	160
2SA370	158
2SA371	158
2SA372	160
2SA373	160
2SA373A	160
2SA374	102A
2SA375	160
2SA375A	176
2SA375B	176
2SA375C	176
2SA375D	176
2SA375E	176
2SA375F	176
2SA375G	176
2SA375GN	176
2SA375H	176
2SA375J	176
2SA375K	176
2SA375L	176
2SA375M	176
2SA375OR	176
2SA375R	176
2SA375X	176
2SA375Y	176
2SA376	126

PART NUMBER	NTE REPLACEMENT
2SA376A	160
2SA376B	160
2SA376C	160
2SA376D	160
2SA376E	160
2SA376F	160
2SA376GN	160
2SA376H	160
2SA376J	160
2SA376K	160
2SA376L	160
2SA376OR	160
2SA376R	160
2SA376X	160
2SA376Y	160
2SA377	160
2SA377A	160
2SA377B	160
2SA377C	160
2SA377D	160
2SA377E	160
2SA377F	160
2SA377G	160
2SA377GN	160
2SA377H	160
2SA377J	160
2SA377K	160
2SA377L	160
2SA377M	160
2SA377OR	160
2SA377R	160
2SA377X	160
2SA377Y	160
2SA378	160
2SA379	160
2SA380	126
2SA380A	160
2SA380B	160
2SA380C	160
2SA380D	160
2SA380E	160
2SA380F	160
2SA380G	160
2SA380GN	160
2SA380H	160
2SA380J	160
2SA380K	160
2SA380L	160
2SA380M	160
2SA380OR	160
2SA380R	160
2SA380X	160
2SA380Y	160
2SA381	126
2SA381A	160
2SA381B	160
2SA381D	160
2SA381E	160
2SA381F	160
2SA381G	160
2SA381GN	160
2SA381H	160
2SA381K	160
2SA381L	160
2SA381M	160
2SA381OR	160
2SA381R	160
2SA381X	160
2SA381Y	160
2SA382	126
2SA382A	160
2SA382B	160
2SA382C	160
2SA382D	160
2SA382E	160
2SA382F	160
2SA382G	160
2SA382GN	160
2SA382H	160
2SA382J	160
2SA382K	160
2SA382L	160
2SA382M	160
2SA382OR	160
2SA382R	160
2SA382X	160
2SA382Y	160
2SA383	126
2SA383A	160
2SA383B	160
2SA383C	160
2SA383D	160
2SA383E	160
2SA383F	160
2SA383G	160
2SA383GN	160
2SA383H	160
2SA383J	160
2SA383K	160
2SA383L	160
2SA383M	160
2SA383OR	160
2SA383R	160
2SA383X	160
2SA383Y	160
2SA384	126
2SA384A	160
2SA384B	160
2SA384C	160
2SA384D	160
2SA384E	160
2SA384F	160
2SA384G	160
2SA384GN	160
2SA384H	160
2SA384J	160
2SA384K	160
2SA384L	160
2SA384M	160
2SA384OR	160
2SA384R	160
2SA384X	160
2SA384Y	160
2SA385	126
2SA385A	126
2SA385B	160
2SA385C	160
2SA385D	126
2SA385E	160
2SA385F	160
2SA385G	160
2SA385GN	160
2SA385H	160
2SA385J	160
2SA385K	160
2SA385L	160
2SA385M	160
2SA385OR	160
2SA385R	160
2SA385X	160
2SA385Y	160
2SA386	160
2SA387	160
2SA388A	107
2SA388ATMFA	107
2SA389	160
2SA390	160
2SA391	126
2SA391A	160
2SA391B	160
2SA391C	160
2SA391D	160
2SA391E	160
2SA391F	160
2SA391G	160
2SA391GN	160
2SA391H	160
2SA391J	160
2SA391K	160
2SA391L	160
2SA391M	160
2SA391OR	160
2SA391R	160
2SA391X	160
2SA391Y	160
2SA392	126
2SA392A	160
2SA392B	160
2SA392C	160
2SA392D	160
2SA392E	160
2SA392F	160
2SA392G	160
2SA392GN	160
2SA392H	160
2SA392J	160
2SA392K	160
2SA392L	160
2SA392M	160
2SA392OR	160
2SA392R	160
2SA392X	160
2SA392Y	160
2SA393	126
2SA393A	126
2SA394	126
2SA394A	160
2SA394B	160
2SA394C	160
2SA394D	160
2SA394E	160
2SA394F	160
2SA394G	160
2SA394GN	160
2SA394H	160
2SA394J	160
2SA394K	160
2SA394L	160
2SA394M	160
2SA394OR	160
2SA394R	160
2SA394X	160
2SA394Y	160
2SA395	126
2SA395A	160
2SA395B	160
2SA395C	160
2SA395D	160
2SA395E	160
2SA395F	160
2SA395G	160
2SA395GN	160
2SA395H	160
2SA395J	160
2SA395K	160
2SA395L	160
2SA395M	160
2SA395OR	160
2SA395R	160
2SA395X	160
2SA395Y	160
2SA396	102
2SA397	102
2SA398	126
2SA398A	160
2SA398B	160
2SA398C	160
2SA398D	160
2SA398E	160
2SA398F	160
2SA398G	160
2SA398GN	160
2SA398H	160
2SA398J	160
2SA398K	160
2SA398L	160
2SA398M	160
2SA398OR	160
2SA398X	160
2SA398Y	160
2SA399	160
2SA399A	160
2SA399B	160
2SA399C	160
2SA399D	160
2SA399E	160
2SA399F	160
2SA399G	160
2SA399GN	160
2SA399H	160
2SA399J	160
2SA399K	160
2SA399L	160
2SA399M	160
2SA399OR	160
2SA399X	160
2SA399Y	160
2SA400	126
2SA400A	158
2SA400B	158
2SA400C	158
2SA400D	158
2SA400E	158
2SA400F	158
2SA400G	158
2SA400GN	158
2SA400H	158
2SA400J	158
2SA400K	158
2SA400L	158
2SA400M	158
2SA400OR	158
2SA400R	158
2SA400X	158
2SA400Y	158
2SA401	160
2SA402	159
2SA403	160
2SA403A	160
2SA403B	160
2SA403C	160
2SA403D	160
2SA403E	160
2SA403F	160
2SA403G	160
2SA403GN	160
2SA403H	160
2SA403J	160
2SA403K	160
2SA403L	160
2SA403M	160
2SA403OR	160
2SA403R	160
2SA403X	160
2SA403Y	160
2SA404	160
2SA404A	160
2SA404B	160
2SA404C	160
2SA404D	160
2SA404E	160
2SA404F	160
2SA404G	160
2SA404GN	160
2SA404H	160
2SA404K	160
2SA404L	160
2SA404M	160
2SA404OR	160
2SA404R	160
2SA404X	160
2SA404Y	160
2SA405	160
2SA405-0	160
2SA406	102A
2SA406A	160
2SA406B	160
2SA406C	160
2SA406D	160
2SA406E	160
2SA406F	160
2SA406G	160
2SA406GN	160
2SA406H	160
2SA406J	160
2SA406K	160
2SA406L	160
2SA406M	160
2SA406OR	160
2SA406R	160
2SA406X	160
2SA406Y	160
2SA407	102A
2SA407A	160
2SA407B	160
2SA407C	160
2SA407D	160
2SA407E	160
2SA407F	160
2SA407G	160
2SA407GN	160
2SA407H	160
2SA407J	160
2SA407K	160
2SA407L	160
2SA407M	160
2SA407OR	160
2SA407R	160
2SA407X	160
2SA407Y	160
2SA408	160
2SA408A	176
2SA408B	176
2SA408D	176
2SA408E	176
2SA408F	176
2SA408GN	176
2SA408H	176
2SA408J	176
2SA408K	176
2SA408L	176
2SA408M	176
2SA408OR	176
2SA408R	176
2SA408X	176
2SA408Y	176
2SA409	160
2SA409A	176
2SA409B	176
2SA409C	176
2SA409D	176
2SA409E	176
2SA409F	176
2SA409G	176
2SA409GN	176
2SA409H	176
2SA409J	176
2SA409K	176
2SA409L	176
2SA409M	126
2SA409OR	176
2SA409R	176
2SA409X	176
2SA409Y	176
2SA410	160
2SA411	160
2SA412	126
2SA412A	160
2SA412B	160
2SA412C	160
2SA412D	160
2SA412E	160
2SA412F	160
2SA412G	160
2SA412GN	160
2SA412H	160
2SA412J	160
2SA412K	160
2SA412L	160
2SA412M	160
2SA412OR	160
2SA412R	160
2SA412X	160
2SA412Y	160
2SA413	160
2SA414	100
2SA414A	160
2SA414B	160
2SA414C	160
2SA414D	160
2SA414E	160
2SA414F	160
2SA414G	160
2SA414GN	160
2SA414H	160
2SA414J	160
2SA414K	160
2SA414L	160
2SA414M	160
2SA414OR	160
2SA414R	160
2SA414X	160
2SA415	100
2SA415A	160
2SA415B	160
2SA415C	160
2SA415D	160
2SA415E	160
2SA415F	160
2SA415G	160
2SA415H	160
2SA415J	160
2SA415K	160
2SA415L	160
2SA415M	160
2SA415OR	160
2SA415R	160
2SA415X	160
2SA415Y	160
2SA416	121
2SA416A	121
2SA416B	121
2SA416C	121
2SA416D	121
2SA416E	121
2SA416F	121
2SA416G	121
2SA416GN	121
2SA416H	121
2SA416J	121
2SA416K	121
2SA416L	121
2SA416M	121
2SA416OR	121
2SA416R	121
2SA416X	121
2SA416Y	121
2SA417	160
2SA419	160
2SA420	160
2SA420A	160
2SA420B	160
2SA420C	160
2SA420D	160
2SA420E	160
2SA420F	160
2SA420G	160
2SA420H	160
2SA420J	160
2SA420K	160
2SA420L	160
2SA420M	160
2SA420OR	160
2SA420R	160
2SA420X	160
2SA420Y	160
2SA421	160
2SA422	160
2SA425	160
2SA426	160
2SA426GN	160
2SA427	126
2SA427A	160
2SA427B	160
2SA427C	160
2SA427D	160
2SA427E	160
2SA427F	160
2SA427G	160
2SA427GN	160
2SA427H	160
2SA427J	160
2SA427K	160
2SA427L	160
2SA427M	160
2SA427OR	160
2SA427R	160
2SA427X	160
2SA427Y	160
2SA428	126
2SA428A	160
2SA428B	160
2SA428C	160
2SA428D	160
2SA428E	160
2SA428F	160
2SA428G	160
2SA428GN	160
2SA428H	160
2SA428J	160
2SA428K	160
2SA428L	160
2SA428M	160
2SA428OR	160
2SA428R	160
2SA428X	160
2SA428Y	160
2SA429	288
2SA429-0	288
2SA429A	288
2SA429B	288
2SA429C	288
2SA429D	288
2SA429E	288
2SA429F	288
2SA429G	288
2SA429G-0	288
2SA429G-R	288
2SA429G-Y	288
2SA429GN	288
2SA429H	288
2SA429J	288
2SA429K	288
2SA429L	288
2SA429M	288
2SA429OR	288
2SA429R	288
2SA429X	288
2SA429Y	288
2SA430	160
2SA431	160
2SA431A	160
2SA432	160
2SA432A	160
2SA432B	160
2SA432C	160
2SA432D	160
2SA432E	160
2SA432F	160
2SA432G	160
2SA432GN	160
2SA432H	160
2SA432K	160
2SA432L	160
2SA432M	160
2SA432OR	160
2SA432R	160
2SA432X	160
2SA432Y	160
2SA433	160
2SA433A	160
2SA433B	160
2SA433C	160
2SA433D	160
2SA433E	160
2SA433F	160
2SA433G	160
2SA433GN	160
2SA433H	160
2SA433K	160
2SA433L	160
2SA433M	160
2SA433OR	160
2SA433R	160
2SA433X	160
2SA433Y	160
2SA434	160
2SA434A	160
2SA434B	160
2SA434C	160
2SA434D	160
2SA434E	160
2SA434F	160
2SA434G	160
2SA434GN	160
2SA434H	160
2SA434J	160
2SA434K	160
2SA434L	160
2SA434M	160
2SA434OR	160
2SA434R	160
2SA434X	160
2SA434Y	160
2SA435	160
2SA435A	160
2SA435B	160
2SA435C	160
2SA435D	160
2SA435E	160
2SA435F	160
2SA435G	160
2SA435GN	160
2SA435H	160
2SA435J	160
2SA435L	160
2SA435M	160
2SA435OR	160
2SA435R	160
2SA435X	160
2SA435Y	160
2SA436	126
2SA436A	160
2SA436B	160
2SA436C	160
2SA436D	160
2SA436E	160
2SA436F	160
2SA436G	160
2SA436GN	160
2SA436H	160
2SA436J	160
2SA436K	160
2SA437	126
2SA437A	160
2SA437B	160
2SA437C	160
2SA437D	160
2SA437E	160
2SA437F	160
2SA437G	160
2SA437GN	160
2SA437H	160
2SA437J	160
2SA437K	160
2SA437L	160
2SA437M	160
2SA437OR	160
2SA437R	160
2SA437X	160
2SA437Y	160
2SA438	126
2SA438A	160
2SA438B	160
2SA438C	160
2SA438D	160
2SA438E	160
2SA438F	160
2SA438G	160
2SA438GN	160
2SA438H	160
2SA438J	160
2SA438K	160
2SA438L	160
2SA438M	160
2SA438OR	160
2SA438R	160
2SA438X	160
2SA438Y	160
2SA440	160
2SA440A	160
2SA440AL	160
2SA440B	160
2SA440C	160
2SA440D	160
2SA440E	160
2SA440F	160
2SA440G	160
2SA440GN	160
2SA440H	160
2SA440J	160
2SA440K	160
2SA440L	160
2SA440M	160
2SA440OR	160
2SA440R	160
2SA440X	160
2SA440Y	160
2SA441	160
2SA443	102A
2SA444	102A
2SA445	102A
2SA446	126
2SA446A	158
2SA446B	158
2SA446C	158
2SA446D	158
2SA446E	158
2SA446F	158
2SA446G	158
2SA446GN	158
2SA446H	158
2SA446J	158
2SA446K	158
2SA446L	158
2SA446M	158
2SA446OR	158
2SA446R	158
2SA446X	158
2SA446Y	158
2SA447	126
2SA447A	158
2SA447B	158
2SA447C	158
2SA447D	158
2SA447E	158
2SA447F	158
2SA447G	158
2SA447GN	158
2SA447H	158
2SA447J	158
2SA447K	158
2SA447L	158
2SA447M	158
2SA447OR	158
2SA447R	158
2SA447X	158
2SA447Y	158
2SA448	160
2SA449	126
2SA450	160
2SA450H	160
2SA451	160
2SA451H	160
2SA452	160
2SA452H	160
2SA453	126
2SA453A	160
2SA453B	160
2SA453C	160
2SA453D	160
2SA453E	160
2SA453F	160
2SA453G	160
2SA453GN	160
2SA453H	160
2SA453J	160
2SA453K	160
2SA453L	160
2SA453M	160
2SA453OR	160
2SA453R	160
2SA453X	160
2SA453Y	160
2SA454	126
2SA454A	160
2SA454B	160
2SA454C	160
2SA454D	160
2SA454E	160
2SA454F	160
2SA454G	160
2SA454GN	160
2SA454H	160
2SA454J	160
2SA454K	160
2SA454L	160
2SA454OR	160
2SA454R	160
2SA454X	160
2SA454Y	160
2SA455	126
2SA455A	160
2SA455B	160
2SA455C	160
2SA455D	160
2SA455E	160
2SA455F	160
2SA455G	160
2SA455GN	160
2SA455H	160
2SA455J	160
2SA455K	160
2SA455L	160
2SA455M	160
2SA455OR	160
2SA455R	160
2SA455X	160
2SA455Y	160
2SA456	126
2SA456A	160
2SA456B	160
2SA456C	160
2SA456D	160
2SA456E	160
2SA456F	160
2SA456G	160
2SA456GN	160
2SA456H	160
2SA456J	160
2SA456K	160
2SA456L	160
2SA456M	160
2SA456OR	160
2SA456R	160
2SA456X	160
2SA456Y	160
2SA457	126

PART NUMBER	NTE REPLACEMENT
2SA457A	160
2SA457B	160
2SA457C	160
2SA457D	160
2SA457E	160
2SA457F	160
2SA457G	160
2SA457GN	160
2SA457H	160
2SA457J	160
2SA457K	160
2SA457L	160
2SA457M	160
2SA457OR	160
2SA457R	160
2SA457X	160
2SA457Y	160
2SA459	102A
2SA460	160
2SA461	160
2SA462	160
2SA463	160
2SA464	160
2SA465	160
2SA466	126
2SA466-2	126
2SA466-3	126
2SA466A	160
2SA466B	160
2SA466BLK	126
2SA466BLU	126
2SA466C	160
2SA466D	160
2SA466E	160
2SA466F	160
2SA466G	160
2SA466GN	160
2SA466H	160
2SA466J	160
2SA466K	160
2SA466L	160
2SA466M	160
2SA466OR	160
2SA466R	160
2SA466X	160
2SA466Y	160
2SA466YEL	126
2SA467	290A
2SA467-0	290A
2SA467-Y	290A
2SA467A	290A
2SA467B	290A
2SA467C	290A
2SA467D	290A
2SA467E	290A
2SA467F	290A
2SA467G	290A
2SA467G-0	290A
2SA467G-O	290A
2SA467G-R	290A
2SA467G-Y	290A
2SA467GN	290A
2SA467H	290A
2SA467J	290A
2SA467K	290A
2SA467L	290A
2SA467M	290A
2SA467OR	290A
2SA467R	290A
2SA467X	290A
2SA467Y	290A
2SA468	126
2SA468A	160
2SA468B	160
2SA468C	160
2SA468D	160
2SA468E	160
2SA468F	160
2SA468G	160
2SA468GN	160
2SA468H	160
2SA468J	160
2SA468K	160
2SA468L	160
2SA468M	160
2SA468OR	160
2SA468R	160
2SA468X	160
2SA468Y	160
2SA469	126
2SA469A	160
2SA469B	160
2SA469C	160
2SA469D	160
2SA469E	160
2SA469F	160
2SA469G	160
2SA469GN	160
2SA469H	160
2SA469J	160
2SA469K	160
2SA469L	160
2SA469M	160
2SA469OR	160
2SA469R	160
2SA469X	160
2SA469Y	160
2SA470	160
2SA470A	160
2SA470B	160
2SA470C	160
2SA470D	160
2SA470E	160
2SA470F	160
2SA470G	160
2SA470GN	160
2SA470H	160
2SA470J	160
2SA470K	160
2SA470L	160
2SA470M	160
2SA470OR	160
2SA470R	160
2SA470X	160
2SA470Y	160
2SA471	126
2SA471-1	126
2SA471-2	126
2SA471-3	126
2SA471A	160
2SA471B	160
2SA471C	160
2SA471D	160
2SA471E	160
2SA471F	160
2SA471G	160
2SA471GN	160
2SA471H	160
2SA471J	160
2SA471K	160
2SA471L	160
2SA471M	160
2SA471OR	160
2SA471R	160
2SA471X	160
2SA471Y	160
2SA472	126
2SA472-1	160
2SA472-2	160
2SA472-3	160
2SA472-4	160
2SA472-5	160
2SA472-6	160
2SA472A	126
2SA472B	126
2SA472C	126
2SA472D	126
2SA472E	126
2SA472F	160
2SA472G	160
2SA472GN	160
2SA472H	160
2SA472J	160
2SA472K	160
2SA472L	160
2SA472M	160
2SA472OR	160
2SA472R	160
2SA472X	160
2SA472Y	160
2SA473	153
2SA473(0)	153
2SA473(O)	153
2SA473-GR	153
2SA473-0	153
2SA473-R	153
2SA473-Y	153
2SA473B	153
2SA473GR	153
2SA473R	153
2SA473Y	153
2SA474	126
2SA474A	126
2SA474B	126
2SA474C	126
2SA474D	126
2SA474E	126
2SA474F	126
2SA474G	126
2SA474GN	126
2SA474H	126
2SA474J	126
2SA474K	126
2SA474L	126
2SA474M	126
2SA474OR	126
2SA474R	126
2SA474X	126
2SA474Y	126
2SA475	160
2SA476	126
2SA476A	126
2SA476B	126
2SA476C	126
2SA476D	126
2SA476E	126
2SA476F	126
2SA476G	126
2SA476GN	126
2SA476H	126
2SA476J	126
2SA476K	126
2SA476L	126
2SA476M	126
2SA476OR	126
2SA476R	126
2SA476X	126
2SA476Y	126
2SA477	126
2SA477A	126
2SA477B	126
2SA477C	126
2SA477D	126
2SA477E	126
2SA477F	126
2SA477G	126
2SA477GN	126
2SA477H	126
2SA477J	126
2SA477K	126
2SA477L	126
2SA477M	126
2SA477OR	126
2SA477R	126
2SA477X	126
2SA477Y	126
2SA478	126
2SA478-G	160
2SA478A	160
2SA478B	160
2SA478C	160
2SA478D	160
2SA478E	160
2SA478F	160
2SA478G	160
2SA478GN	160
2SA478H	160
2SA478J	160
2SA478K	160
2SA478L	160
2SA478M	160
2SA478OR	160
2SA478R	160
2SA478X	160
2SA478Y	160
2SA479	126
2SA479-G	160
2SA479A	160
2SA479B	160
2SA479C	160
2SA479D	160
2SA479E	160
2SA479F	160
2SA479G	160
2SA479GN	160
2SA479H	160
2SA479J	160
2SA479K	160
2SA479L	160
2SA479M	160
2SA479OR	160
2SA479R	160
2SA479X	160
2SA479Y	160
2SA480	159
2SA480-OR	159
2SA480A	159
2SA480B	159
2SA480C	159
2SA480D	159
2SA480E	159
2SA480F	159
2SA480G	159
2SA480GN	159
2SA480H	159
2SA480J	159
2SA480K	159
2SA480L	159
2SA480M	159
2SA480OR	159
2SA480R	159
2SA480X	159
2SA480Y	159
2SA482	159
2SA482A	159
2SA482B	159
2SA482C	159
2SA482D	159
2SA482E	159
2SA482F	159
2SA482G	159
2SA482GN	159
2SA482H	159
2SA482J	159
2SA482K	159
2SA482L	159
2SA482M	159
2SA482OR	159
2SA482R	159
2SA482X	159
2SA482Y	159
2SA483	218
2SA484	323
2SA484BL	323
2SA484R	323
2SA484Y	323
2SA485	323
2SA485BL	323
2SA485R	323
2SA485Y	323
2SA486	323
2SA486-R	323
2SA486-RED	323
2SA486-Y	323
2SA486-YEL	323
2SA486BL	323
2SA486R	323
2SA486Y	323
2SA489	153
2SA489-0	153
2SA489-O	153
2SA489-R	153
2SA489-Y	153
2SA490	153
2SA490(POWER)	153
2SA490-0	153
2SA490-O	153
2SA490-Y	153
2SA490A	153
2SA490B	153
2SA490C	153
2SA490D	153
2SA490E	153
2SA490F	153
2SA490G	153
2SA490GN	153
2SA490H	153
2SA490J	153
2SA490K	153
2SA490L	153
2SA490LBG1	153
2SA490M	153
2SA490OR	153
2SA490R	153
2SA490X	153
2SA490Y	153
2SA490YA	153
2SA490YLBG11	153
2SA490YLBGL-1	398
2SA490YLBGL1	153
2SA493	290A
2SA493-GR	290A
2SA493-O	290A
2SA493-Y	290A
2SA493A	290A
2SA493B	290A
2SA493C	290A
2SA493D	290A
2SA493E	290A
2SA493F	290A
2SA493G	290A
2SA493G-GR	290A
2SA493G-Y	290A
2SA493GN	290A
2SA493GR	290A
2SA493H	290A
2SA493J	290A
2SA493K	290A
2SA493L	290A
2SA493M	290A
2SA493OR	290A
2SA493R	290A
2SA493X	290A
2SA493Y	290A
2SA494	159
2SA494(Y)	234
2SA494-GR	159
2SA494-GR-1	234
2SA494-O	159
2SA494-OR	234
2SA494-Y	234
2SA494A	234
2SA494B	234
2SA494C	234
2SA494D	234
2SA494E	234
2SA494F	234
2SA494G	234
2SA494GN	234
2SA494GR	234
2SA494H	234
2SA494J	234
2SA494K	234
2SA494L	234
2SA494M	234
2SA494O	234
2SA494OR	234
2SA494R	234
2SA494X	234
2SA494Y	234
2SA495	290A
2SA495(IR)	194
2SA495(O)	290A
2SA495(R)	290A
2SA495(Y)	290A
2SA495-0	290A
2SA495-0,Y	290A
2SA495-1	290A
2SA495-G	290A
2SA495-GN	290A
2SA495-O	290A
2SA495-OF	290A
2SA495-OR	290A
2SA495-ORG	290A
2SA495-ORG-G	290A
2SA495-R	290A
2SA495-RD	290A
2SA495-RED	290A
2SA495-RED-G	290A
2SA495-Y	290A
2SA495-YEL	290A
2SA495-YEL-G	290A
2SA495-YL	290A
2SA495A	290A
2SA495B	290A
2SA495C	290A
2SA495D	290A
2SA495E	290A
2SA495F	290A
2SA495G	290A
2SA495G-GR	290A
2SA495G-O	290A
2SA495G-R	290A
2SA495G-Y	290A
2SA495GN	290A
2SA495GR	290A
2SA495H	290A
2SA495J	290A
2SA495K	290A
2SA495L	290A
2SA495M	290A
2SA495O	290A
2SA495OF	290A
2SA495OR	290A
2SA495Q	290A
2SA495R	290A
2SA495RD	290A
2SA495RED	290A
2SA495RED-G	290A
2SA495W	290A
2SA495W1	290A
2SA495WI	290A
2SA495X	290A
2SA495Y	295
2SA495YEL	290A
2SA495YEL-G	290A
2SA495YL	290A
2SA496	185
2SA496(0)	185
2SA496-0	185
2SA496-O	185
2SA496-ORG	185
2SA496-R	185
2SA496-RED	185
2SA496-Y	185
2SA496-YEL	185
2SA496O	211
2SA496ORG	185
2SA496R	185
2SA496RED	185
2SA496Y	374
2SA496YEL	185
2SA497	129
2SA497-0	129
2SA497-ORG	129
2SA497-R	129
2SA497-RED	129
2SA497-Y	129
2SA497-YEL	129
2SA497R	129
2SA497RED	129
2SA497Y	129
2SA498	129
2SA498(Y)	294
2SA498-0	294
2SA498-ORG	294
2SA498-R	294
2SA498-RED	294
2SA498-Y	294
2SA498-YEL	294
2SA498R	294
2SA498RED	294
2SA498Y	129
2SA499	159
2SA499-0	159
2SA499-ORG	159
2SA499-R	159
2SA499-RED	159
2SA499-Y	159
2SA499-YEL	159
2SA499A	159
2SA499B	159
2SA499C	159
2SA499D	159
2SA499E	159
2SA499F	159
2SA499G	159
2SA499GN	159
2SA499H	159
2SA499J	159
2SA499K	159
2SA499L	159
2SA499M	159
2SA499O	159
2SA499OR	159
2SA499R	159
2SA499X	159
2SA499Y	159
2SA500	159
2SA500-0	159
2SA500-OR	159
2SA500-ORG	159
2SA500-R	159
2SA500-RED	159
2SA500-Y	159
2SA500-YEL	159
2SA500A	159
2SA500B	159
2SA500C	159
2SA500D	159
2SA500E	159
2SA500F	159
2SA500G	159
2SA500GN	159
2SA500H	159
2SA500J	159
2SA500K	159
2SA500L	159
2SA500M	159
2SA5000	159
2SA5000R	159
2SA500R	159
2SA500X	159
2SA500Y	159
2SA501	129
2SA502	159
2SA502-0	159
2SA502-OR	159
2SA502-R	159
2SA502-Y	159
2SA502A	159
2SA502B	159
2SA502C	159
2SA502D	159
2SA502E	159
2SA502F	159
2SA502G	159
2SA502GN	159
2SA502H	159
2SA502J	159
2SA502K	159
2SA502L	159
2SA502M	159
2SA502OR	159
2SA502R	159
2SA502X	159
2SA502Y	159
2SA503	129
2SA503-GR	294
2SA503-GRN	294
2SA503-0	129
2SA503-ORG	294
2SA503-R	129
2SA503-Y	129
2SA503-YEL	294
2SA503G	129
2SA503GR	211
2SA503O	129
2SA503Y	129
2SA504	129
2SA504-GR	294
2SA504-GRN	294
2SA504-0	129
2SA504-ORG	294
2SA504-R	129
2SA504-Y	129
2SA504-YEL	294
2SA504G	129
2SA504GR	129
2SA504O	129
2SA504Y	129
2SA505	185
2SA505-0	129
2SA505-O	185
2SA505-ORG	187
2SA505-R	185
2SA505-RED	187
2SA505-Y	185
2SA505-YEL	187
2SA505O	187
2SA505ORG	185
2SA505R	187
2SA505RED	185
2SA505Y	187
2SA505YEL	185
2SA506	160
2SA507	160
2SA507A	160
2SA507B	160
2SA507C	160
2SA507D	160
2SA507E	160
2SA507F	160
2SA507G	160
2SA507GN	160
2SA507H	160
2SA507J	160
2SA507K	160
2SA507L	160
2SA507OR	160
2SA507R	160
2SA507X	160
2SA507Y	160
2SA508	160
2SA508D	160
2SA508F	160
2SA509	290
2SA509(A)	290
2SA509(O)	290
2SA509-0	290A
2SA509-O	290
2SA509-OR	290
2SA509-OY	290A
2SA509-R	290
2SA509-RD	290
2SA509-Y	290A
2SA509-YE	290
2SA509A	290
2SA509B	290
2SA509BL	290
2SA509C	290
2SA509D	290
2SA509E	290
2SA509F	290
2SA509G	290
2SA509G-0	290
2SA509G-Y	290
2SA509GN	290
2SA509GR	290
2SA509GR-1	290
2SA509H	290
2SA509J	290
2SA509K	290
2SA509L	290
2SA509M	290
2SA509O	290
2SA509OR	290
2SA509Q	290
2SA509R	290
2SA509RD	290
2SA509T	290
2SA509V	290
2SA509X	290
2SA509Y	290
2SA509YE	290
2SA510	323
2SA510-0	323
2SA510-OR	323
2SA510-R	323
2SA510-RD	323
2SA510A	323
2SA510B	323
2SA510C	323
2SA510D	323
2SA510E	323
2SA510F	323
2SA510G	323
2SA510GN	323
2SA510H	323
2SA510J	323
2SA510K	323
2SA510L	323
2SA510M	323
2SA510OR	323
2SA510R	193
2SA510X	323
2SA510Y	323
2SA511	323
2SA511-G	323
2SA511-O	323
2SA511-OR	323
2SA511-R	323
2SA511-RD	323
2SA511A	323
2SA511B	323
2SA511C	323
2SA511D	323
2SA511E	323
2SA511F	323
2SA511G	323
2SA511GN	323
2SA511H	323
2SA511J	323
2SA511K	323
2SA511L	323
2SA511M	323
2SA511OR	323
2SA511R	323
2SA511X	323
2SA511Y	323
2SA512	323
2SA512-0	323
2SA512-OR	323
2SA512-OR1	323
2SA512-ORG	323
2SA512-R	323
2SA512-RD	323
2SA512-RED	323
2SA512A	323
2SA512B	323
2SA512C	323
2SA512D	323
2SA512E	323
2SA512F	323
2SA512G	323
2SA512GN	323
2SA512H	323
2SA512J	323
2SA512K	323
2SA512L	323
2SA512M	323
2SA512OR	323
2SA512R	323
2SA512X	323
2SA512Y	323
2SA513	323
2SA513-0	323
2SA513-OR	323
2SA513-ORG	323
2SA513-R	323
2SA513-RD	323
2SA513-RED	323
2SA513A	323
2SA513B	323
2SA513C	323
2SA513D	323
2SA513E	323
2SA513F	323
2SA513G	323
2SA513GN	323
2SA513H	323
2SA513J	323
2SA513K	323
2SA513L	323
2SA513M	323
2SA513OR	323
2SA513R	323
2SA513X	323
2SA513Y	323
2SA514A-Q	19
2SA514A-R	19
2SA516	323
2SA516A	323
2SA517	126
2SA518	126
2SA518-G	160
2SA518A	160
2SA518B	160
2SA518C	160
2SA518D	160
2SA518E	160
2SA518F	160
2SA518G	160
2SA518GN	160
2SA518H	160
2SA518J	160
2SA518K	160
2SA518L	160
2SA518M	160
2SA518OR	160
2SA518R	160
2SA518X	160
2SA518Y	160
2SA522	159
2SA522A	159
2SA522AL	159
2SA522B	159
2SA522C	159

PART NUMBER	NTE REPLACEMENT
2SA522D	159
2SA522E	159
2SA522F	159
2SA522G	159
2SA522GN	159
2SA522H	159
2SA522J	159
2SA522K	159
2SA522L	159
2SA522M	159
2SA5220R	159
2SA522R	159
2SA522X	159
2SA522Y	159
2SA523	159
2SA523A	159
2SA525	160
2SA525A	160
2SA525B	160
2SA525C	160
2SA525D	160
2SA525E	160
2SA525F	160
2SA525GN	160
2SA525H	160
2SA525J	160
2SA525K	160
2SA525L	160
2SA525M	160
2SA5250R	160
2SA525R	160
2SA525X	160
2SA525Y	160
2SA527	129
2SA528	129
2SA530	159
2SA530A	193
2SA530B	193
2SA530C	193
2SA530D	193
2SA530E	193
2SA530F	193
2SA530G	193
2SA530GN	193
2SA530GR	193
2SA530H	159
2SA530H1	193
2SA530J	193
2SA530K	193
2SA530L	193
2SA530M	193
2SA5300R	193
2SA530R	193
2SA530X	193
2SA530Y	193
2SA532	129
2SA532A	129
2SA532B	129
2SA532C	129
2SA532D	129
2SA532E	129
2SA532F	129
2SA536	160
2SA536A	85
2SA536E	85
2SA537	129
2SA537A	129
2SA537AA	129
2SA537AB	129
2SA537AC	129
2SA537AH	129
2SA537AHA	129
2SA537AHB	129
2SA537B	129
2SA537C	129
2SA537H	129
2SA537HA	129
2SA537HB	129
2SA537K	129
2SA537L	129
2SA538	102A
2SA538-G	102A
2SA538G	102A
2SA539	290A
2SA539(K)	290A
2SA539(L)	290A
2SA539(M)	290A
2SA539A	290A
2SA539B	290A
2SA539C	290A
2SA539D	290A
2SA539E	290A
2SA539F	290A
2SA539G	290A
2SA539GN	290A
2SA539H	290A
2SA539J	290A
2SA539K	290A
2SA539L	290A
2SA539M	290A
2SA539OR	290A
2SA539R	290A
2SA539S	290A
2SA539X	290A
2SA539Y	290A
2SA542	290A
2SA542A	159
2SA542C	159
2SA542D	159
2SA542E	159
2SA542F	159
2SA542G	159
2SA542GN	159
2SA542H	159
2SA542J	159
2SA542K	159
2SA542L	159
2SA542M	159
2SA5420R	159
2SA542R	159
2SA542X	159
2SA542Y	159
2SA543	234
2SA544	129
2SA544A	129
2SA544B	129
2SA544C	129
2SA544D	129
2SA544E	129
2SA544F	129
2SA544G	129
2SA544GN	129
2SA544H	129
2SA544J	129
2SA544K	129
2SA544L	129
2SA544M	129
2SA5440R	129
2SA544R	129
2SA544X	129
2SA544Y	129
2SA545	193
2SA545(K)	193
2SA545(L)	193
2SA545A	193
2SA545B	193
2SA545C	193
2SA545D	193
2SA545E	193
2SA545F	193
2SA545G	193
2SA545GN	193
2SA545GRN	193
2SA545H	193
2SA545J	193
2SA545K	193
2SA545KLM	193
2SA545L	193
2SA545LM	193
2SA545M	193
2SA5450R	193
2SA545R	193
2SA545X	193
2SA545Y	193
2SA546	129
2SA546A	129
2SA546AR	290A
2SA546B	129
2SA546E	129
2SA546H	129
2SA547	193
2SA547A	193
2SA548	159
2SA548G	106
2SA548GN	106
2SA548H	106
2SA548HA	106
2SA548HB	106
2SA548HC	106
2SA548OR	106
2SA548R	106
2SA548Y	106
2SA549	159
2SA549A	288
2SA549AH	288
2SA550	159
2SA550A	159
2SA550A(Q)	159
2SA550A(R)	159
2SA550A(R,Q,S	159
2SA550A(S)	159
2SA550AB	129
2SA550AQ	159
2SA550AR	129
2SA550AS	129
2SA550B	129
2SA550BC	129
2SA550BL	129
2SA550C	129
2SA550D	129
2SA550P	159
2SA550Q	159
2SA550R	159
2SA550S	159
2SA550Y	129
2SA551	129
2SA551C	129
2SA551D	129
2SA551E	129
2SA552	129
2SA553	159
2SA554	159
2SA554A	159
2SA555	290A
2SA556	290A
2SA557	106
2SA558	159
2SA559	159
2SA559A	159
2SA560	129
2SA560A	159
2SA561	290A
2SA561(O)	290A
2SA561-0	290A
2SA561-GR	290A
2SA561-GRN	290A
2SA561-0	290A
2SA561-OR	290A
2SA561-ORG	290A
2SA561-R	290A
2SA561-RD	290A
2SA561-RED	290A
2SA561-Y	290A
2SA561-YEL	290A
2SA561-YL	290A
2SA561GR	290A
2SA561GRN	290A
2SA561R	290A
2SA561RD	290A
2SA561RED	290A
2SA561Y	290A
2SA561YEL	290A
2SA561YL	290A
2SA562	290A
2SA562(O)	290A
2SA562(T)	290A
2SA562(Y)	290A
2SA562-0	290A
2SA562-FA	290A
2SA562-GR	290A
2SA562-GRN	290A
2SA562-M	290A
2SA562-O	290A
2SA562-OR	290A
2SA562-ORG	290A
2SA562-R	290A
2SA562-RD	290A
2SA562-RED	290A
2SA562-TM	290A
2SA562-TM0	290A
2SA562-Y	290A
2SA562-Y-TM	290A
2SA562-YE	290
2SA562-YEL	290A
2SA562D	290A
2SA562E	290A
2SA562G	290A
2SA562GR	290A
2SA562GRN	290A
2SA562O	290A
2SA562Q	290A
2SA562R	290A
2SA562RD	290A
2SA562RED	290A
2SA562T	290A
2SA562T0	290A
2SA562T(0)	290A
2SA562T(O)	290A
2SA562T(Q)	290A
2SA562TH-0	290A
2SA562TM	290A
2SA562TM0	290A
2SA562TM-0	290A
2SA562TM-0FA	290A
2SA562TM-O	290A
2SA562TM-OA	290A
2SA562TM-Y	290A
2SA562TM-YFA	290A
2SA562TM/FA	290A
2SA562TML	290A
2SA562TMM-0	290A
2SA562TMO	290A
2SA562TMY	290A
2SA562TO	290A
2SA562TQ	290A
2SA562V	290A
2SA562VO	290A
2SA562Y	290A
2SA562Y-TM	290A
2SA562YE	290A
2SA562YEL	290A
2SA562YTM	290A
2SA564	290A
2SA564(0)	290A
2SA564(O)	290A
2SA564(P)	290A
2SA564(Q)	290A
2SA564(R)	290A
2SA564(S)	290A
2SA564(S,T)	290A
2SA564(T)	290A
2SA564(Y)	290A
2SA564-0	290A
2SA564-1	290A
2SA564-O	290A
2SA564-OGD	290A
2SA564-OR	290A
2SA564-P	290A
2SA564-PQR	290A
2SA564-Q	290A
2SA564-Q,R	290A
2SA564-QR	290A
2SA564-R	290A
2SA564-S	290A
2SA564A	290A
2SA564A2	290A
2SA564A(IR)	234
2SA564A(P)	290A
2SA564A(Q)	290A
2SA564A(R)	290A
2SA564A(S)	290A
2SA564A-P	290A
2SA564A-P(CU)	290A
2SA564A-PQR	290A
2SA564A-Q	290A
2SA564A-Q(CU)	290A
2SA564A-QCU	290A
2SA564A-R	290A
2SA564A-R(CU)	290A
2SA564A-S	290A
2SA564ABL	290A
2SA564ABQ	290A
2SA564ABQ-1	290A
2SA564AG	290A
2SA564AK	290A
2SA564AL	290A
2SA564AO	290A
2SA564AP	290A
2SA564APQR	290A
2SA564AQ	290A
2SA564AQGD	290
2SA564AQR	290A
2SA564AQRS	290A
2SA564AR	290A
2SA564ARS	290A
2SA564AS	290A
2SA564AT	290A
2SA564ATAQR	290A
2SA564ATAQRS	290A
2SA564B	290A
2SA564BL	290A
2SA564C	290A
2SA564D	290A
2SA564E	290A
2SA564F	290A
2SA564FQ	290A
2SA564FQ-1	290A
2SA564FR	290A
2SA564FR-1	290A
2SA564G	290A
2SA564GN	290A
2SA564H	290A
2SA564J	290A
2SA564K	290A
2SA564L	290A
2SA564M	290A
2SA564OR	290A
2SA564P	290A
2SA564P.A	290A
2SA564POR	290A
2SA564PQR	290A
2SA564Q	290A
2SA564QGD	290A
2SA564QHD	290A
2SA564QP	290A
2SA564QR	290A
2SA564QRS	290A
2SA564R	290A
2SA564RQS	290A
2SA564RS	290A
2SA564S	290A
2SA564T	290A
2SA564X	290A
2SA564XL	290A
2SA564Y	290A
2SA565	159
2SA565(B,C)	106
2SA565A	159
2SA565AB	106
2SA565B	159
2SA565BA	106
2SA565C	159
2SA565D	159
2SA565E	106
2SA565F	106
2SA565G	106
2SA565GN	106
2SA565H	106
2SA565J	106
2SA565K	159
2SA565L	106
2SA565M	106
2SA565OR	106
2SA565R	106
2SA565X	106
2SA565Y	106
2SA566	218
2SA566A	218
2SA566B	218
2SA566C	218
2SA567	159
2SA567A	159
2SA567B	159
2SA567C	159
2SA567D	159
2SA567E	159
2SA567F	159
2SA567G	159
2SA567GN	159
2SA567GR	159
2SA567H	159
2SA567J	159
2SA567K	159
2SA567L	159
2SA567M	159
2SA5670R	159
2SA567R	159
2SA567Y	159
2SA568	290A
2SA568-OR	159
2SA568A	290A
2SA568B	290A
2SA568C	290A
2SA568D	290A
2SA568E	290A
2SA568F	290A
2SA568G	290A
2SA568GN	290A
2SA568H	290A
2SA568J	290A
2SA568K	290A
2SA568L	290A
2SA568M	290A
2SA5680R	290A
2SA568R	290A
2SA568X	290A
2SA568Y	290A
2SA569	290A
2SA569A	290A
2SA569B	290A
2SA569C	290A
2SA569D	290A
2SA569E	290A
2SA569F	290A
2SA569G	290A
2SA569GN	290A
2SA569H	290A
2SA569J	290A
2SA569K	290A
2SA569L	290A
2SA569M	290A
2SA5690R	290A
2SA569R	290A
2SA569X	290A
2SA569Y	290A
2SA570	290A
2SA570A	290A
2SA570B	290A
2SA570C	290A
2SA570D	290A
2SA570E	290A
2SA570F	290A
2SA570G	290A
2SA570GN	290A
2SA570H	290A
2SA570J	290A
2SA570K	290A
2SA570L	290A
2SA570M	290A
2SA5700R	290A
2SA570R	290A
2SA570X	290A
2SA570Y	290A
2SA571	129
2SA572	234
2SA572Y	106
2SA573	290A
2SA573A	290A
2SA573D	290A
2SA574	298
2SA575	290A
2SA575K	290A
2SA575L	290A
2SA576	106
2SA577	298
2SA578	234
2SA578A	234
2SA578B	234
2SA578C	234
2SA579	234
2SA579A	234
2SA579B	234
2SA579C	234
2SA580	159
2SA581	160
2SA592Y	159
2SA594	129
2SA594-0	129
2SA594-R	129
2SA594-Y	129
2SA594N	106
2SA595C	129
2SA597	129
2SA599	193
2SA599(Y)	193
2SA599Y	193
2SA603	159
2SA603A	159
2SA603B	159
2SA603C	159
2SA603D	159
2SA603E	159
2SA603F	159
2SA603G	159
2SA603GN	159
2SA603H	159
2SA603J	159
2SA603K	159
2SA603L	159
2SA603M	159
2SA6030R	159
2SA603R	159
2SA603X	159
2SA603Y	159
2SA604	129
2SA605	129
2SA606	129
2SA606S	129
2SA607	129
2SA607A	129
2SA607B	129
2SA607C	129
2SA607E	193
2SA607F	193
2SA607G	193
2SA607GN	193
2SA607H	193
2SA607J	193
2SA607K	193
2SA607L	193
2SA607M	193
2SA6070R	193
2SA607R	193
2SA607S	129
2SA607SA	129
2SA607SD	129
2SA607X	193
2SA607Y	193
2SA608	290A
2SA608(C)	159
2SA608(D)	159
2SA608(E)	290A
2SA608(F)	290A
2SA608-0	159
2SA608-C	159
2SA608-D	159
2SA608-E	159
2SA608-E-CTV-NP	290A
2SA608-F	159
2SA608-F-CTV-NP	290A
2SA608-O	159
2SA608-OR	159
2SA608A	290A
2SA608AE	290A
2SA608AE(ECB)	159
2SA608AF	290A
2SA608B	159
2SA608BL	159
2SA608C	159
2SA608D	290A
2SA608D(F)	159
2SA608D,E	159
2SA608E	290A
2SA608E (SANYO/SEARS)	290A
2SA608EF	159
2SA608EZ	290
2SA608F	290A
2SA608F (SANYO/SEARS)	290A
2SA608FZ	290
2SA608GN	159
2SA608H	159
2SA608J	159
2SA608K	290A
2SA608KE	290A
2SA608KF	290A
2SA608KG	290A
2SA608KNP-T	290A
2SA608KNPET	290A
2SA608KNPFT	290A
2SA608L	159
2SA608M	159
2SA608NP	290A
2SA608NP(F)	290A
2SA608NP(G)	290A
2SA608NP-T	290A
2SA608NPF	290A
2SA608NPG	290A
2SA6080R	159
2SA608P	159
2SA608R	159
2SA608SE	290A
2SA608SF	290A
2SA608SP	290A
2SA608SP(F)	290A
2SA608SP(G)	290A
2SA608SPE	290A
2SA608SPF	290A
2SA608SPG	290A
2SA608X	159
2SA608Y	159
2SA609	290A
2SA609A	159
2SA609B	159
2SA609C	159
2SA609D	290A
2SA609E	290A
2SA609F	290A
2SA609GN	193
2SA609J	193
2SA609K	193
2SA609L	193
2SA609M	193
2SA6090R	193
2SA609R	193
2SA609Y	193
2SA610	290A
2SA610B	290A
2SA611	290A
2SA611-4E	290A
2SA612	129
2SA613	218
2SA614	218
2SA616	218
2SA616(1)	218
2SA616(1,2)	218
2SA616(2)	218
2SA617	288
2SA617K	159
2SA618	288
2SA618K	159
2SA620	290A
2SA620WL	290A
2SA621	106
2SA622	232
2SA625	129
2SA626	219
2SA626L	180
2SA627	219
2SA628	234
2SA628(BCE)	290A
2SA628(EF)	234
2SA628(F)	234
2SA628-E	290A
2SA628-0	234
2SA628-OR	234
2SA628A	290A
2SA628A(BCE)	290A
2SA628A-E	290A
2SA628AA	234
2SA628AC(BCE)	290A
2SA628AD	234
2SA628AD(BCE)	290A
2SA628AE	290A
2SA628AE(BCE)	290A
2SA628AF	290A
2SA628B	290A
2SA628C	234
2SA628C(BCE)	290A
2SA628D	290A
2SA628D(BCE)	290A
2SA628E	290A
2SA628E(BCE)	290A
2SA628E,F	234
2SA628EF	234
2SA628F	290A
2SA628G	234
2SA628GN	234
2SA628H	234
2SA628J	234
2SA628K	234
2SA628L	234
2SA628M	234
2SA628OR	234
2SA628R	234
2SA628X	234
2SA628Y	234
2SA629	159
2SA629A	159
2SA629B	159
2SA629C	159
2SA629D	159
2SA629E	159
2SA629F	159
2SA629G	159
2SA629GN	159
2SA629H	159
2SA629J	159
2SA629K	159
2SA629L	159
2SA629M	159
2SA629OR	159
2SA629R	159
2SA629X	159
2SA629Y	159
2SA633A	128
2SA634	187A
2SA634(L)	187A
2SA634(L,K)	187A
2SA634(M)	187A
2SA634-4L-L	187A
2SA634A	187A
2SA634B	187A
2SA634C	187A
2SA634D	187A
2SA634K	187A
2SA634L	187A
2SA634M	187A
2SA635	189
2SA636	187A
2SA636(4)K	187
2SA636(4)L	187
2SA636(L)	187
2SA636(M)	187
2SA636A	187A
2SA636B	187A
2SA636C	187A
2SA636D	187A
2SA636K	187A
2SA636L	187A
2SA636M	187A
2SA637	288
2SA637C	288
2SA637D	288
2SA637M	288
2SA637MQ	288
2SA637MR	288
2SA637MS	288
2SA638	288
2SA638E	288
2SA638E,F	159
2SA638F	288
2SA638Q	294
2SA638R	294
2SA639	288
2SA639S	288
2SA640	234
2SA640(M)	234
2SA640A	234
2SA640B	234
2SA640C	234
2SA640D	234
2SA640E	234
2SA640L	234
2SA640M	234
2SA640S	234
2SA641	290
2SA641A	290
2SA641B	290
2SA641BL	290
2SA641C	290
2SA641D	290
2SA641G	290
2SA641GR	290
2SA641K	290
2SA641L	290
2SA641M	290
2SA641O	290
2SA641OR	290
2SA641R	290
2SA641Y	290
2SA642	290A
2SA642A	290A
2SA642B	290A
2SA642C	290A
2SA642D	290A
2SA642E	290A
2SA642F	290A
2SA642G	290A

PART NUMBER	NTE REPLACEMENT
2SA642GN	290A
2SA642H	290A
2SA642J	290A
2SA642K	290A
2SA642L	290A
2SA642M	290A
2SA642OR	290A
2SA642R	290A
2SA642S	290A
2SA642V	290A
2SA642W	290A
2SA642X	290A
2SA642Y	290A
2SA643	193A
2SA643-0	193
2SA643P	193A
2SA643Q	193A
2SA643R	193A
2SA643S	193A
2SA643V	193A
2SA643W	193A
2SA643Y	193
2SA645	211
2SA646	187A
2SA648	219
2SA648A	219
2SA648B	219
2SA648C	219
2SA649	281
2SA650	281
2SA651	281
2SA652TM-0	290A
2SA656	187A
2SA656L	187A
2SA656M	187A
2SA657	219
2SA658	219
2SA658A	219
2SA659	290A
2SA659(D)	159
2SA659(E)	159
2SA659A	290A
2SA659B	290A
2SA659C	290A
2SA659D	290A
2SA659E	290A
2SA659F	290A
2SA659G	290A
2SA659L	290A
2SA659P	290A
2SA659R	290A
2SA659Y	290A
2SA661	290A
2SA661-GR	290A
2SA661-0	290A
2SA661-R	298
2SA661-Y	298
2SA661GR	290A
2SA661R	290A
2SA661Y	290A
2SA663	219
2SA663-R	160
2SA666	290A
2SA666A	290A
2SA666AQ	290A
2SA666AR	290A
2SA666B	290A
2SA666BL	290A
2SA666C	290A
2SA666D	290A
2SA666E	290A
2SA666H	290A
2SA666HR	290A
2SA666I	290A
2SA666IQRS	290A
2SA666P	290A
2SA666Q	290A
2SA666QRS	290A
2SA666R	290A
2SA666S	290A
2SA666Y	290A
2SA668	129
2SA669	288
2SA670	153
2SA670A	153
2SA670B	153
2SA670C	153
2SA671	292
2SA671A	292
2SA671B	292
2SA671C	292
2SA671K	292
2SA671KA	292
2SA671KB	292
2SA671KC	292
2SA672	159
2SA672(B)	106
2SA672A	159
2SA672B	159
2SA672C	159
2SA673	290A
2SA673(B)	290A
2SA673(C)	290A
2SA673(C)-Y	290A
2SA673(D)	290A
2SA673-0	290A
2SA673-C	290A
2SA673-D	290A
2SA673-0	290A
2SA673-OR	290A
2SA673A	290A
2SA673A(C)	290A
2SA673A-C	290A
2SA673AA	290A
2SA673AB	290A
2SA673AC	290A
2SA673AD	290A
2SA673AE	290A
2SA673AK	290A
2SA673AKA	290A
2SA673AKB	290A
2SA673AKC	290A
2SA673AS	290A
2SA673AS(C)	290A
2SA673ASC	290A
2SA673B	290A
2SA673C	290A
2SA673C2	290A
2SA673C-TB	290A
2SA673CD	290A
2SA673D	290A
2SA673E	290A
2SA673F	290A
2SA673G	290A
2SA673GN	290A
2SA673H	290A
2SA673J	290A
2SA673K	290A
2SA673L	290A
2SA673M	290A
2SA673OR	290A
2SA673R	290A
2SA673WT	290A
2SA673X	290A
2SA673Y	290A
2SA675	290A
2SA675A	290A
2SA675B	290A
2SA675C	290A
2SA677	290A
2SA677-0	290A
2SA677-5	290A
2SA677-6	290A
2SA677-O	290A
2SA677-OR	290A
2SA677A	290A
2SA677B	290A
2SA677C	290A
2SA677D	290A
2SA677E	290A
2SA677F	290A
2SA677G	290A
2SA677GN	290A
2SA677H	290A
2SA677HL	290A
2SA677J	290A
2SA677K	290A
2SA677L	290A
2SA677M	290A
2SA677OR	290A
2SA677R	290A
2SA677X	290A
2SA677Y	290A
2SA678	290A
2SA678(C)	290A
2SA678(SONY)	290A
2SA678-5	290A
2SA678-6	290A
2SA678-0	290A
2SA678-OR	290A
2SA678A	290A
2SA678B	290A
2SA678C	290A
2SA678D	290A
2SA678E	290A
2SA678F	290A
2SA678G	290A
2SA678GN	290A
2SA678H	290A
2SA678HL	290A
2SA678J	290A
2SA678K	290A
2SA678L	159
2SA678M	290A
2SA678OR	290A
2SA678R	290A
2SA678Y	290A
2SA679	281
2SA679-R	281
2SA679R	281
2SA679Y	281
2SA680	281
2SA680-R	281
2SA680R	281
2SA680Y	281
2SA681	129
2SA682	374
2SA682-0	374
2SA682-Y	374
2SA682O	298
2SA683	294
2SA683.4	294
2SA683(P)	294
2SA683(P,O,R)	294
2SA683(P,R,Q)	294
2SA683(Q)	294
2SA683(Q,R,S)	294
2SA683(R)	294
2SA683(S)	294
2SA683P	294
2SA683Q	294
2SA683R	294
2SA683S	294
2SA684	294
2SA684(Q)	294
2SA684(R)	294
2SA684(S)	294
2SA684Q	294
2SA684Q,R	294
2SA684R	294
2SA684RS	294
2SA684S	294
2SA685	159
2SA688Q	374
2SA690D	159
2SA693	290
2SA693C	290
2SA695	159
2SA695(C)	298
2SA695C	298
2SA695D	159
2SA695E	298
2SA696	290A
2SA696(BCE)	290A
2SA696A(BCE)	290A
2SA696B(BCE)	290A
2SA696C	290A
2SA696C(BCE)	290A
2SA696D	290A
2SA696D(BCE)	290A
2SA696E	290A
2SA696E(BCE)	290A
2SA697	290A
2SA697(BCE)	290A
2SA697C	290A
2SA697C(BCE)	290A
2SA697D	290A
2SA697D(BCE)	290A
2SA697E	290A
2SA697E(BCE)	290A
2SA698	292
2SA699	187A
2SA699(AP)	187A
2SA699(H)	187A
2SA699(Q)	187A
2SA699(R)	187A
2SA699-0	187A
2SA699-O	187A
2SA699A	187A
2SA699A(P)	187A
2SA699A(R)	187A
2SA699A(RPQ)	187A
2SA699A-Q	187A
2SA699AO	187A
2SA699AP	187A
2SA699AQ	187A
2SA699AR	187A
2SA699CF	187A
2SA699P	187A
2SA699PF	187A
2SA699Q	187A
2SA699R	187A
2SA700	187A
2SA700(B)	187
2SA700B	187A
2SA700Y	187A
2SA701	159
2SA701F	159
2SA701F0	106
2SA701FJ	159
2SA701F0	159
2SA702	234
2SA704	290A
2SA704A	290A
2SA704B	290A
2SA704C	290A
2SA704D	290A
2SA704E	290A
2SA704F	290A
2SA704G	290A
2SA704GN	290A
2SA704H	290A
2SA704J	290A
2SA704K	290A
2SA704L	290A
2SA704M	290A
2SA704OR	290A
2SA704R	290A
2SA704X	290A
2SA704Y	290A
2SA705	290A
2SA705A	290A
2SA705B	290A
2SA705C	290A
2SA705D	290A
2SA705E	290A
2SA705F	290A
2SA705G	290A
2SA705GN	290A
2SA705H	290A
2SA705J	290A
2SA705K	290A
2SA705L	290A
2SA705M	290A
2SA705OR	290A
2SA705R	290A
2SA705X	290A
2SA705Y	290A
2SA706	211
2SA707	193
2SA707V	193
2SA708	129
2SA708A	129
2SA708B	129
2SA708C	129
2SA708Y	129
2SA709	106
2SA710	106
2SA711	106
2SA712	397
2SA713	232
2SA713A	232
2SA714	281
2SA715	374
2SA715A	185
2SA715B	185
2SA715C	374
2SA715D	185
2SA715WB	185
2SA715WBP	187A
2SA715WT	185
2SA715WT(C,B)	187
2SA715WTA	185
2SA715WTB	185
2SA715WTC	185
2SA715WTD	185
2SA717	211
2SA718	159
2SA719	290A
2SA719(Q)	290A
2SA719(R)	290A
2SA719(S)	290A
2SA719-0	290A
2SA719-P	290A
2SA719-PQR	290A
2SA719-Q	290A
2SA719-R	290A
2SA719-S	290A
2SA719,R	290A
2SA719A	290A
2SA719B	290A
2SA719E	290A
2SA719K	290A
2SA719P	290A
2SA719PQ	290A
2SA719PQR	290A
2SA719Q	290A
2SA719QR	290A
2SA719R	290A
2SA719RS	290A
2SA719S	290A
2SA719TAQR	290A
2SA719W	290A
2SA720	290A
2SA720-0	290A
2SA720-Q	290A
2SA720-R	290A
2SA720A	290A
2SA720A(R)	290A
2SA720A(S)	290A
2SA720AP	290A
2SA720AQ	290A
2SA720AR	290A
2SA720AS	290A
2SA720B	290A
2SA720C	290A
2SA720D	290A
2SA720L	290A
2SA720NC	290A
2SA720NCP	290A
2SA720NCQ	290A
2SA720NCR	290A
2SA720NCS	290A
2SA720P	290A
2SA720Q	290A
2SA720QR	290A
2SA720QS	290A
2SA720R	290A
2SA720RN	290A
2SA720RST	290A
2SA720S	290A
2SA720Y	290A
2SA721	234
2SA721Q	234
2SA721R	234
2SA721S	234
2SA721T	234
2SA721U	234
2SA722	234
2SA722S	234
2SA722T	234
2SA722U	234
2SA723	290A
2SA723A	290A
2SA723B	290A
2SA723C	290A
2SA723D	290A
2SA723E	290A
2SA723F	290A
2SA723R	290A
2SA724	194
2SA725	234
2SA725F	234
2SA725G	234
2SA725H	234
2SA726	234
2SA726F	234
2SA726G	234
2SA726H	234
2SA726S	234
2SA726S(BCE)	234
2SA726Y	234
2SA728	290A
2SA728A	290A
2SA728AC	290A
2SA728AD	290A
2SA728AE	290A
2SA728C	290A
2SA728D	290A
2SA728E	290A
2SA730	159
2SA731	159
2SA732	159
2SA733	290A
2SA733(C)-T	290A
2SA733(K)	290A
2SA733(P)	290
2SA733-P	290A
2SA733-T	290A
2SA733A	290A
2SA733AK	290A
2SA733AP	290A
2SA733AQ	290A
2SA733AR	290A
2SA733B	290A
2SA733C	290A
2SA733C-T	290A
2SA733CT	290A
2SA733D	290A
2SA733E	290A
2SA733F	290A
2SA733GR	290A
2SA733H	290A
2SA733I	290A
2SA733IO	290A
2SA733IQ	290A
2SA733K	290A
2SA733P	290A
2SA733P1	290A
2SA733P2	290A
2SA733PQ	290A
2SA733PR	290A
2SA733Q	290A
2SA733Q1P	290A
2SA733Q,R	290
2SA733QP	290A
2SA733QT	290A
2SA733R	290A
2SA733T	290A
2SA733TP	290A
2SA734	129
2SA735	159
2SA736	129
2SA738	185
2SA738(B)	193A
2SA738A	193A
2SA738B	185
2SA738C	185
2SA738D	187A
2SA740	292
2SA740A	292
2SA740AB	292
2SA741	106
2SA741H	234
2SA742	129
2SA742H	106
2SA743	185
2SA743-A	185
2SA743A	185
2SA743AA	185
2SA743AB	185
2SA743AC	185
2SA743AD	185
2SA743B	185
2SA743C	185
2SA743D	185
2SA744	219
2SA745	281
2SA745A	281
2SA746	219
2SA747	281
2SA747A	281
2SA748	292
2SA748Q	153
2SA748R	153
2SA749	288
2SA749A	288
2SA750	234
2SA751	383
2SA751(P)	383
2SA751P	383
2SA751Q	383
2SA751QR	383
2SA751R	383
2SA751S	383
2SA752	383
2SA752P	383
2SA752Q	383
2SA752R	383
2SA752S	383
2SA753	281
2SA753A	281
2SA753B	281
2SA753C	281
2SA754	153
2SA754A	153
2SA754B	153
2SA754C	153
2SA754D	153
2SA755	153
2SA755A	153
2SA755B	153
2SA755C	153
2SA755D	153
2SA756	281
2SA756A	281
2SA756B	281
2SA756C	281
2SA757	281
2SA757A	281
2SA757B	281
2SA757C	281
2SA758	281
2SA758A	281
2SA758B	281
2SA758C	281
2SA759	159
2SA760	234
2SA761	129
2SA763	234
2SA763-6	234
2SA763-W	234
2SA763-WL-3	234
2SA763-WL-4	234
2SA763-WL-5	234
2SA763-WL-6	234
2SA763-WN	234
2SA763-WN-3	234
2SA763-WN-4	234
2SA763-WN-5	234
2SA763-WN-6	234
2SA763-Y	234
2SA763-YL	234
2SA763-YL-3	234
2SA763-YL-4	234
2SA763-YL-5	234
2SA763-YL-6	234
2SA763-YN	234
2SA763-YN-3	234
2SA763-YN-4	234
2SA763-YN-5	234
2SA763-YN-6	234
2SA764	197
2SA765	197
2SA766	398
2SA766S	398
2SA767	159
2SA768	153
2SA768G	153
2SA768O	242
2SA768Q	153
2SA768Y	153
2SA769	197
2SA770	197
2SA771	332
2SA772	294
2SA772-23	294
2SA772J	294
2SA773	290A
2SA773-1	383
2SA773-2	383
2SA774	194
2SA774A	234
2SA775	292
2SA775A	292
2SA775AA	292
2SA775AB	292
2SA775AC	292
2SA775B	292
2SA775C	292
2SA776	106
2SA776A	234
2SA777	298
2SA777P	298
2SA777Q	298
2SA777R	298
2SA777S	298
2SA778	288
2SA778A	288
2SA778AK	288
2SA778AK-02	288
2SA778K	288
2SA779	187A
2SA779K	187A
2SA779KB	187A
2SA779KC	187A
2SA779KD	187A
2SA780	187A
2SA780A	187A
2SA780AK	187A
2SA780AKA	187A
2SA780AKB	187A
2SA780AKC	187A
2SA780AKD	187A
2SA781	106
2SA782	159
2SA783	194
2SA784	232
2SA785	159
2SA786	290A
2SA786(BCE)	290A
2SA786Q	290A
2SA786QL	290A
2SA786R	234
2SA787	234
2SA788	159
2SA789	194
2SA790	232
2SA791	232
2SA794	211
2SA794A	292
2SA795	292
2SA796	232
2SA798	43
2SA798A	43
2SA798F	43
2SA798G	43
2SA798H	43
2SA799	129
2SA800	395
2SA807	180
2SA808	180
2SA808A	219
2SA809	288
2SA810	288
2SA811	159
2SA812	2409
2SA812-M51E	2409
2SA812M5	159
2SA813	106
2SA814	292
2SA815	292
2SA816	398
2SA816-0	398
2SA816-Y	398
2SA817	298
2SA817-Y	298
2SA817AY	298
2SA817Y	298
2SA818	240
2SA818-O	240
2SA825	14
2SA825Q	290A
2SA825R	290A
2SA826	290A
2SA826P	290A
2SA826Q	290A
2SA826Q,R	290A
2SA826R	290A
2SA826RY	290A
2SA826S	290A
2SA828A	159
2SA835	288
2SA835H	288
2SA836	234
2SA836D	234
2SA836E	234
2SA836F	234
2SA837	281
2SA838	159
2SA838A	159
2SA838B	159
2SA838C	159
2SA839	398
2SA839-0	398
2SA839R	398
2SA839Y	398
2SA840	398
2SA840H	398
2SA840JC	398
2SA840JM	398
2SA840LC	288
2SA840LL	288
2SA841	159
2SA841-GR	159
2SA842	234
2SA842-BL	234
2SA842-GR	234
2SA842GR	234
2SA843	398
2SA843P	398
2SA843Q	398
2SA844	234
2SA844C	234
2SA844CD	234
2SA844D	234
2SA844DE	234
2SA844E	234
2SA844F	234
2SA850	290A
2SA850(BCE)	290A
2SA850C	290A
2SA850C(BCE)	290A
2SA850D	290A
2SA850D(BCE)	290A
2SA854	290A
2SA854(Q)	290A
2SA854-00	290A
2SA854A	290A
2SA854PQ	290A
2SA854Q	290A
2SA854QE	290A
2SA854QV	290A
2SA854QY	85
2SA854QZ	290A
2SA854R	290A
2SA854RY	290A
2SA854S	290A
2SA854SQ	290A
2SA854SR	290A
2SA855	234
2SA856	234
2SA856A	234
2SA857	288
2SA858	288
2SA859	159
2SA860	288
2SA861	187A
2SA861JK	187A
2SA866	194
2SA867	106
2SA868	159
2SA869	106
2SA870	159
2SA871	194
2SA872	91
2SA872A	288
2SA872AE	288
2SA872AF	288
2SA872E	288
2SA872F	288
2SA873	106
2SA874	19
2SA874PQ	19
2SA874Q	19
2SA877	219
2SA878	281
2SA879	288
2SA879P	288
2SA879Q	288
2SA880	126
2SA881	21
2SA881Q	21
2SA881R	21
2SA882	281
2SA883	290
2SA884	290
2SA885P	374

PART NUMBER	NTE REPLACEMENT
2SA885Q	374
2SA886	185
2SA886QR	185
2SA886V	374
2SA886VQ	374
2SA886VR	374
2SA886VS	374
2SA887	189
2SA888	126
2SA889	126
2SA890	126
2SA891	126
2SA893	91
2SA893A	91
2SA893AD	91
2SA893AE	91
2SA893D	91
2SA893F	91
2SA894	298
2SA895	106
2SA896	288
2SA898	374
2SA899	374
2SA900R	374
2SA904A	91
2SA905	91
2SA906	234
2SA907	219
2SA908	285
2SA909	285
2SA912	288
2SA912Q	288
2SA912R	288
2SA912S	288
2SA913	398
2SA913P	398
2SA913Q	398
2SA913R	398
2SA914	292
2SA915	288
2SA916	288
2SA916K	288
2SA916L	288
2SA916M	288
2SA917	383
2SA918	106
2SA921	91
2SA921A	383
2SA921AS	91
2SA921Q	91
2SA922	129
2SA923	288
2SA924	290A
2SA924B	290A
2SA924C	290A
2SA927	290A
2SA929	234
2SA930	234
2SA933	290A
2SA933(Q)	290A
2SA933(Q)-Y	290A
2SA933(R)	290A
2SA933(R)-Y	290A
2SA933(S)	290A
2SA933-0	290A
2SA933-Q	290A
2SA933-R	290A
2SA933-S	290A
2SA933-Y	290A
2SA933A(Q)	290A
2SA933A(Q)-Y	290A
2SA933A(R)	290A
2SA933A(R)-Y	290A
2SA933AQ	290A
2SA933AR	290A
2SA933P	290A
2SA933Q	290A
2SA933Q-Y	290A
2SA933QR	290A
2SA933QV	290A
2SA933QY	290A
2SA933QZ	290A
2SA933R	290A
2SA933R-Y	290A
2SA933RA	290A
2SA933RK	290A
2SA933RZ	290A
2SA933S	290A
2SA933S0R	290A
2SA933S(Q)	290A
2SA933S(Q)-Y	290A
2SA933S(QR)-T	290A
2SA933S(R)	290A
2SA933S(R)-Y	290A
2SA933S(S)	290A
2SA933S-Q	290A
2SA933S-R	290A
2SA933S-S	290A
2SA933SP	290A
2SA933SQ	290A
2SA933SQR	290A
2SA933SQT	290A
2SA933SQZ	290A
2SA933SR	290A
2SA933SRC	290A
2SA933SRN	290A
2SA933SRQ	290A
2SA933SRR	290A
2SA933SRU	290A
2SA933SRX	290A
2SA933SRY	290A
2SA933SS	290A
2SA933SSD	290A
2SA933SSK	290A
2SA933SSU	290A
2SA933TRS	290A
2SA933XTPR	290A
2SA934	294
2SA935	298
2SA935R	298
2SA935T103	298
2SA937	17
2SA937-Q	17
2SA937-R	17
2SA937LN	17
2SA937LNR	17
2SA937LNS	17
2SA937M	17
2SA937M(Q)	17
2SA937M(R)	17
2SA937M(S)	17
2SA937MLN	17
2SA937MLNR	17
2SA937MLNS	17
2SA937MQ	17
2SA937MQRS	17
2SA937MR	17
2SA937MRS	17
2SA937MS	17
2SA937P	290A
2SA937Q	17
2SA937R	17
2SA937RQ	17
2SA937RZ	17
2SA937S	17
2SA940	398
2SA940-0	398
2SA940-AR	398
2SA940-AR(D)	398
2SA940-AR(E)	398
2SA940-D	398
2SA940-E	398
2SA940-R-D	398
2SA940-R-E	398
2SA940-Z	398
2SA940AD	398
2SA940D	398
2SA940E	398
2SA940LB	398
2SA940LBG12	398
2SA940LBGL2	398
2SA940R	398
2SA940RD	398
2SA940RDE	398
2SA940RE	398
2SA941	290A
2SA941-GR	290A
2SA942	290A
2SA942-GR	290A
2SA945	158
2SA945-0	159
2SA945A-RA	85
2SA945Y	159
2SA948	129
2SA948E	129
2SA949	383
2SA949-Y(C)	383
2SA949Y	383
2SA950	290A
2SA950(0)	290A
2SA950(GR)	290A
2SA950(O)	290A
2SA950(Y)	290A
2SA950-0	290A
2SA950-O	290A
2SA950-Y	290A
2SA950FA	290A
2SA950O	290A
2SA950Y	290A
2SA950YFA	290A
2SA951	292
2SA951-10	292
2SA951KA	292
2SA951KD	292
2SA951LC	292
2SA951MV	292
2SA952	290A
2SA952(C)-T	290A
2SA952(C)-TL	290A
2SA952(L)	290A
2SA952C	290A
2SA952K	290A
2SA952L	290A
2SA952LK	290A
2SA952LT	290A
2SA952M	290A
2SA952ML	290A
2SA952ML2	290A
2SA953	290A
2SA953K	290A
2SA953L	290A
2SA953M	290A
2SA954	290A
2SA956	106
2SA957	398
2SA957Y	398
2SA958	398
2SA958Y	398
2SA962	189
2SA963	295
2SA966-0	294
2SA966Y	294
2SA968	398
2SA968(Y)	398
2SA968-0	398
2SA968A	398
2SA968A-0	398
2SA968A-Y	398
2SA968B	398
2SA968Y	398
2SA969	398
2SA969O	398
2SA969Y	398
2SA970	290A
2SA970-GR	290A
2SA971	285
2SA978	234
2SA978E(BCE)	290A
2SA979	41
2SA979F	41
2SA979G	41
2SA979H	41
2SA980	281
2SA981	281
2SA982	281
2SA984	290A
2SA984D	290A
2SA984E	290A
2SA984F	290A
2SA984K	290A
2SA984K-T	290A
2SA984KD	290A
2SA984KE	290A
2SA984KF	290A
2SA985	398
2SA985A	398
2SA985P	398
2SA985Q	398
2SA987	290A
2SA987P	290A
2SA988	288
2SA988FE	298
2SA992	91
2SA993	106
2SA995	45
2SA995F	45
2SA995G	45
2SA995H	45
2SA999	290A
2SA999-0	290A
2SA999D	290A
2SA999E	290A
2SA999F	290A
2SA1001	281
2SA1002	281
2SA1003	285
2SA1004	234
2SA1007	88
2SA1010	332
2SA1010K	332
2SA1010L	332
2SA1010M	332
2SA1010V	332
2SA1011	398
2SA1011D	398
2SA1011E	398
2SA1012-Y	153
2SA1012Y	153
2SA1013	32
2SA1013-0	32
2SA1013-0(C)	32
2SA1013-O	32
2SA1013-R	32
2SA1013-Y	32
2SA1013R	32
2SA1013Y	32
2SA1015	290A
2SA1015(0)	290A
2SA1015(G)	290A
2SA1015(GR)	290A
2SA1015(GR)L	290A
2SA1015(GR)Y	290A
2SA1015(H)-Y	290A
2SA1015(J)-Y	290A
2SA1015(Y)	290A
2SA1015(Y)L	290A
2SA1015(Y)Y	290A
2SA1015(YG)-LB	290A
2SA1015-0	290A
2SA1015-0(SAN)	290A
2SA1015-0-FA1	290A
2SA1015-A	290A
2SA1015-F	290A
2SA1015-FA	290A
2SA1015-GR	290A
2SA1015-GR(SAN)	290A
2SA1015-GR-(SAN)	290A
2SA1015-O	290A
2SA1015-OFA	290A
2SA1015-TPE2	290A
2SA1015-Y	290A
2SA1015-Y(SAN)	290A
2SA1015-YFA	290A
2SA1015ABL	290
2SA1015FA	290A
2SA1015FA-0	290A
2SA1015G	290A
2SA1015GR	290A
2SA1015GR-(SAN)	290A
2SA1015GRL	290A
2SA1015H-Y	290A
2SA1015J-Y	290A
2SA1015L	290A
2SA1015O	290A
2SA1015OY	290A
2SA1015Y	290A
2SA1015Y-TYPE1	290A
2SA1015Y-TYPEI	290A
2SA1015YFA	290A
2SA1015YL	290A
2SA1016	234
2SA1016F	234
2SA1016G	234
2SA1018	160
2SA1018Q	288
2SA1018QR	288
2SA1018R	288
2SA1019	91
2SA1020	25
2SA1020(Y)	25
2SA1020-0	25
2SA1020-Y	294
2SA1020Y	25
2SA1021	374
2SA1021-0	374
2SA1021-O	374
2SA1021-R	374
2SA1021-Y	374
2SA1022	2407
2SA1022(B)	2407
2SA1022(C)	2407
2SA1022-B	2407
2SA1022B	2407
2SA1022C	2407
2SA1023P	290A
2SA1023Q	290A
2SA1026	290A
2SA1027	290A
2SA1027R	290A
2SA1028A	126
2SA1029	290A
2SA1029B	290A
2SA1029C	290A
2SA1029D	290A
2SA1030	290A
2SA1030B	290A
2SA1030C	290A
2SA1037	2409
2SA1037(R)	2409
2SA1037K	2409
2SA1037K(FR)	2409
2SA1037KQ	2409
2SA1037KS	2409
2SA1037KT97	2409
2SA1037KT147	2409
2SA1038	91
2SA1038KA	2409
2SA1040	290A
2SA1040-GR	290A
2SA1040-0	290A
2SA1040-Y	290A
2SA1041	285
2SA1042	219
2SA1043	180
2SA1044	180
2SA1045	219
2SA1046	219
2SA1047	374
2SA1048	290A
2SA1048-0	290A
2SA1048-GR	290A
2SA1048BL	290A
2SA1048GR	290A
2SA1048Y	290A
2SA1049	290A
2SA1049-GR	290A
2SA1050	285
2SA1051	285
2SA1060	291
2SA1061	391
2SA1061P	391
2SA1061Q	391
2SA1061R	391
2SA1062	37
2SA1064	285
2SA1065	285
2SA1068	285
2SA1069C	55
2SA1072	281
2SA1075	93
2SA1075-B	93
2SA1075-G	93
2SA1075B	93
2SA1075G	93
2SA1076	93
2SA1078	55
2SA1079	55
2SA1083	159
2SA1091	288
2SA1091-0	288
2SA1091O	288
2SA1091R	288
2SA1093	391
2SA1094	34
2SA1094-0	34
2SA1094O	34
2SA1094R	34
2SA1094Y	34
2SA1095	34
2SA1095O	34
2SA1095R	34
2SA1095Y	34
2SA1100(BCE)	290A
2SA1100D(BCE)	290A
2SA1100E(BCE)	290A
2SA1100F(BCE)	290A
2SA1102	37
2SA1103	391
2SA1104	37
2SA1104A	37
2SA1105	37
2SA1106	37
2SA1107	34
2SA1108	34
2SA1109	59
2SA1110	374
2SA1110-P	374
2SA1110-Q	374
2SA1110-R	374
2SA1110-S	374
2SA1110P	374
2SA1110Q	374
2SA1110R	374
2SA1110S	374
2SA1115	290A
2SA1115(E)	290A
2SA1115(F)	290A
2SA1115(G)	290A
2SA1115-E	290A
2SA1115-EF	290A
2SA1115-F	290A
2SA1115D	290A
2SA1115E	290A
2SA1115F	290A
2SA1115G	290A
2SA1116	68
2SA1117	68
2SA1122	2409
2SA1122(CD)	2409
2SA1123	32
2SA1124	32
2SA1125	375
2SA1128	290A
2SA1135	291
2SA1141	37
2SA1144	374
2SA1145	32
2SA1146	37
2SA1150	290A
2SA1150-O	290A
2SA1150-Y	290A
2SA1150Y	290A
2SA1162-G	2409
2SA1166	34
2SA1169	93
2SA1170	59
2SA1175	2362
2SA1175(H)	290A
2SA1175(H)-Y	290A
2SA1175(J)	2362
2SA1175(J)-Y	2362
2SA1175-E	2362
2SA1175-EF	2362
2SA1175-F	290A
2SA1175-FF	2362
2SA1175-HF	2362
2SA1175-HFE	290A
2SA1175-JF	2362
2SA1175-KF	2362
2SA1175A	159
2SA1175E	2362
2SA1175EF	2362
2SA1175F	2362
2SA1175FF	2362
2SA1175H	290A
2SA1175H-Y	290A
2SA1175HF	2362
2SA1175H0	290A
2SA1175J	2362
2SA1175JF	2362
2SA1175JHFE	290A
2SA1175K	290A
2SA1175KF	2362
2SA1175TP	290A
2SA1179-TA	2407
2SA1184	374
2SA1186	37
2SA1187	34
2SA1188	383
2SA1195A	187A
2SA1198	234
2SA1198E	234
2SA1198RS	234
2SA1198S	234
2SA1205	37
2SA1206	217
2SA1206K	217
2SA1215	34
2SA1216	59
2SA1220A	374
2SA1220A-P	374
2SA1220A-Q	374
2SA1220AQ	374
2SA1227	37
2SA1232	37
2SA1235	2407
2SA1235-E	2407
2SA1246	290A
2SA1246(R)	290A
2SA1246(S)	290A
2SA1246R	290A
2SA1246S	290A
2SA1246T	290A
2SA1246U	290A
2SA1248	374
2SA1248-R	374
2SA1248-S	374
2SA1248-T	374
2SA1249	374
2SA1249-R	374
2SA1249-S	374
2SA1249-T	374
2SA1249R	374
2SA1249S	374
2SA1253	2362
2SA1253S	2362
2SA1253T	2362
2SA1253U	2362
2SA1261	183
2SA1263	37
2SA1264	37
2SA1265	37
2SA1265N	37
2SA1265NFA-1	37
2SA1294	93
2SA1295	93
2SA1301	2329
2SA1301-0	2329
2SA1301-R	2329
2SA1301R	2329
2SA1302	2329
2SA1302-0	2329
2SA1302-R	2329
2SA1302R	2329
2SA1304	398
2SA1304(OEC1)	398
2SA1305	153
2SA1305Y	153
2SA1309	2362
2SA1309A	2362
2SA1309A(Q)	2362
2SA1309A(Q)Y	2362
2SA1309A-QRS	2362
2SA1309AQ	2362
2SA1309AR	2362
2SA1309AS	2362
2SA1309R	2362
2SA1309S	2362
2SA1317	2362
2SA1317(S)	2362
2SA1317S	2362
2SA1317SZ	2362
2SA1317T	2362
2SA1317U	2362
2SA1320	288
2SA1321	288
2SA1339	2362
2SA1339R	2362
2SA1339S	2362
2SA1339T	2362
2SA1339U	2362
2SA1341	2419
2SA1342	2417
2SA1344	2415
2SA1345	2360
2SA1346	2358
2SA1346Z	2358
2SA1348	2356
2SA1390B	2362
2SA1390C	2362
2SA1390D-TZ	2362
2SA1408	374
2SA1408(0)	374
2SA1408(R)	374
2SA1408-0	374
2SA1408-0(LB-SAN-2)	374
2SA1408-0(SAN-1)	374
2SA1408-R	374
2SA1408-R(LB-SAN-2)	374
2SA1408-R(SAN-1)	374
2SA1408R	374
2SA1408Y(0)	374
2SA1408Y(R)	374
2SA1450R	383
2SA1450S	383
2SA1473A(R)	399
2SA1494	59
2SA1606	55
2SA1606E	55
2SA1624	288
2SA1624(D)-AA	288
2SA1624D	288
2SA1624E	288
2SA2073LBGL2	375
2SA2228D	399
2SA2271-AE	399
2SA2383-R(SAN)	31
2SA3000-AA	85
2SA3410A	160
2SA3410B	160
2SA4728B	160
2SA4930	193
2SA4940	193
2SA4950	159
2SA4950R	193
2SA4964	185
2SA5610	159
2SA5620	290A
2SA5640Y	290A
2SA5670	193
2SA5670R	193
2SA5680	193
2SA5680R	193
2SA5690	193
2SA5690R	193
2SA6089E)	290A
2SA6361	187
2SA6361,K	187
2SA6361K	187
2SA6661QRS	159
2SA6666QRS	234
2SA6808-F-CTV-NP	290A
2SA7190	288
2SA7200	159
2SA7215T	234
2SA7680	242
2SA7686Y	153
2SA8440	234
2SA9660	294
2SA10150	290A
2SA10150FA	290A
2SA10480	290A
2SA10486R	290A
2SA11950	187A
2SA13462	2358
2SA24082	160
2SA492057B2-60	102
2SA4712057B2-66	160
2SA4712057B2-65	160
2SA-101SY	290A
2SA-854	290A
2SA-854Q	290A
2SA-937	17
2SA-1013	32
2SA-1015	290A
2SA-4551	160
2SA-4561	160
2SA-NJ-101	159
2SA-NJ101	159
2SAJ15GN	160
2SANJ101	159
2SAP33S-S	290A
2SAS094	290
2SAU03	160
2SAU03H	160
2SAU/3H	160
2SAUUJ	176
2SB050(BRIDGE)	5312
2SB8-723-303-20	312
2SB12	160
2SB13	102A
2SB14	160
2SB15	158
2SB16A	105
2SB16B	105
2SB16C	105
2SB16D	105
2SB16E	105
2SB16F	105
2SB16G	105
2SB16GN	105
2SB16H	105
2SB16J	105
2SB16K	105
2SB16L	105
2SB16M	105
2SB16OR	105
2SB16R	105
2SB16X	105
2SB16Y	105
2SB17A	105
2SB17B	105
2SB17C	105
2SB17D	105
2SB17E	105
2SB17F	105
2SB17G	105
2SB17GN	105
2SB17H	105
2SB17J	105
2SB17K	105
2SB17L	105
2SB17M	105
2SB17OR	105
2SB17R	105
2SB17X	105
2SB17Y	105
2SB18A	105
2SB18B	105
2SB18C	105
2SB18D	105
2SB18E	105
2SB18F	105
2SB18G	105
2SB18GN	105
2SB18H	105
2SB18J	105
2SB18K	105
2SB18L	105
2SB18LA	105
2SB18M	105
2SB18OR	105
2SB18R	105
2SB18X	105
2SB18Y	105
2SB19	104
2SB19A	127
2SB19B	127
2SB19C	127
2SB19D	127
2SB19E	127
2SB19F	127
2SB19G	127
2SB19GN	127
2SB19H	127
2SB19J	127
2SB19K	127
2SB19L	127
2SB19M	127
2SB19OR	127
2SB19R	127
2SB19X	127
2SB19Y	127
2SB20	104
2SB20A	127
2SB20B	127
2SB20C	127
2SB20D	127
2SB20E	127
2SB20F	127
2SB20G	127
2SB20GN	127
2SB20H	127
2SB20J	127
2SB20K	127
2SB20L	127
2SB20M	127
2SB20OR	127

PART NUMBER	NTE REPLACEMENT
2SB20R	127
2SB20X	127
2SB20Y	127
2SB21	104
2SB21A	127
2SB21B	127
2SB21C	127
2SB21D	127
2SB21E	127
2SB21F	127
2SB21G	127
2SB21GN	127
2SB21H	127
2SB21J	127
2SB21K	127
2SB21L	127
2SB21M	127
2SB21OR	127
2SB21R	127
2SB21X	127
2SB21Y	127
2SB22	102A
2SB22-0	102A
2SB22/09-30100	158
2SB22A	102A
2SB22B	102A
2SB22C	158
2SB22D	158
2SB22E	158
2SB22F	158
2SB22G	158
2SB22GN	158
2SB22H	158
2SB22I	102A
2SB22J	158
2SB22K	158
2SB22L	158
2SB22M	158
2SB22OR	158
2SB22P	158
2SB22R	102A
2SB22X	158
2SB22Y	102A
2SB23	102A
2SB23A	158
2SB23B	158
2SB23C	158
2SB23D	158
2SB23E	158
2SB23F	158
2SB23G	158
2SB23GN	158
2SB23H	158
2SB23J	158
2SB23K	158
2SB23L	158
2SB23M	158
2SB23OR	158
2SB23R	158
2SB23X	158
2SB23Y	158
2SB24	102A
2SB24A	158
2SB24B	158
2SB24C	158
2SB24D	158
2SB24E	158
2SB24F	158
2SB24G	158
2SB24GN	158
2SB24H	158
2SB24J	158
2SB24K	158
2SB24L	158
2SB24M	158
2SB24OR	158
2SB24R	158
2SB24X	158
2SB24Y	158
2SB25	121
2SB25-N	127
2SB25A	127
2SB25B	121
2SB25C	127
2SB25D	127
2SB25E	127
2SB25F	127
2SB25G	127
2SB25GN	127
2SB25H	127
2SB25J	127
2SB25K	127
2SB25L	127
2SB25M	127
2SB25OR	127
2SB25R	127
2SB25X	127
2SB25Y	127
2SB26	104
2SB26A	104
2SB26B	127
2SB26C	127
2SB26D	127
2SB26E	127
2SB26F	127
2SB26G	127
2SB26GN	127
2SB26H	127
2SB26J	127
2SB26K	127
2SB26L	127
2SB26M	127
2SB26OR	127
2SB26R	127
2SB26X	127
2SB26Y	127
2SB27	104
2SB27A	127
2SB27B	127
2SB27C	127
2SB27D	127
2SB27E	127
2SB27F	127
2SB27G	127
2SB27GN	127
2SB27H	127
2SB27J	127
2SB27K	127
2SB27L	127
2SB27M	127
2SB27OR	127
2SB27R	127
2SB27X	127
2SB27Y	127
2SB28	104
2SB28A	127
2SB28B	127
2SB28C	127
2SB28D	127
2SB28E	127
2SB28F	127
2SB28G	127
2SB28GN	127
2SB28H	127
2SB28J	127
2SB28K	127
2SB28L	127
2SB28M	127
2SB28OR	127
2SB28R	127
2SB28S	37
2SB28X	127
2SB28Y	127
2SB29	104
2SB29A	127
2SB29B	127
2SB29C	127
2SB29D	127
2SB29E	127
2SB29F	127
2SB29G	127
2SB29GN	127
2SB29H	127
2SB29J	127
2SB29K	127
2SB29L	127
2SB29M	127
2SB29OR	127
2SB29R	127
2SB29X	127
2SB29Y	127
2SB30	104
2SB30A	127
2SB30B	127
2SB30C	127
2SB30D	127
2SB30E	127
2SB30F	127
2SB30G	127
2SB30GN	127
2SB30H	127
2SB30J	127
2SB30K	127
2SB30L	127
2SB30M	127
2SB30OR	127
2SB30R	127
2SB30X	127
2SB30Y	127
2SB31	104
2SB31A	127
2SB31B	127
2SB31C	127
2SB31D	127
2SB31E	127
2SB31F	127
2SB31G	127
2SB31GN	127
2SB31H	127
2SB31J	127
2SB31K	127
2SB31L	127
2SB31M	127
2SB31OR	127
2SB31R	127
2SB31X	127
2SB31Y	127
2SB32	102A
2SB32(3)	102A
2SB32(N)	102A
2SB32-0	102A
2SB32-1	102A
2SB32-2	102A
2SB32-4	102A
2SB32A	158
2SB32B	158
2SB32C	158
2SB32D	158
2SB32E	158
2SB32F	158
2SB32G	158
2SB32GN	158
2SB32H	158
2SB32J	158
2SB32K	158
2SB32M	158
2SB32N	102A
2SB32OR	158
2SB32R	158
2SB32X	158
2SB32Y	158
2SB33	102A
2SB33(3)	162A
2SB33(4)	102A
2SB33(5)	158
2SB33-4	102A
2SB33-5	158
2SB33A	158
2SB33B	158
2SB33BK	158
2SB33C	102A
2SB33D	102A
2SB33E	102A
2SB33F	102A
2SB33G	158
2SB33GN	158
2SB33H	158
2SB33J	158
2SB33K	158
2SB33L	158
2SB33M	158
2SB33OR	158
2SB33R	158
2SB33X	158
2SB33Y	158
2SB34	102
2SB34A	158
2SB34B	158
2SB34C	158
2SB34D	158
2SB34E	158
2SB34F	158
2SB34G	158
2SB34GN	158
2SB34H	158
2SB34J	158
2SB34K	158
2SB34L	158
2SB34M	158
2SB34N	102
2SB34OR	158
2SB34R	158
2SB34X	158
2SB34Y	197
2SB35	158
2SB35A	158
2SB35B	158
2SB35C	158
2SB35D	158
2SB35E	158
2SB35F	158
2SB35G	158
2SB35GN	158
2SB35H	158
2SB35J	158
2SB35K	158
2SB35L	158
2SB35M	158
2SB35OR	158
2SB35R	158
2SB35X	158
2SB35Y	158
2SB37	102A
2SB37A	102A
2SB37B	102A
2SB37C	102A
2SB37D	158
2SB37E	102A
2SB37F	102A
2SB37G	158
2SB37GN	158
2SB37H	158
2SB37J	158
2SB37K	158
2SB37L	158
2SB37M	158
2SB37OR	158
2SB37R	158
2SB37X	158
2SB37Y	158
2SB38	102
2SB38A	158
2SB38B	158
2SB38C	158
2SB38D	158
2SB38E	158
2SB38F	158
2SB38G	158
2SB38GN	158
2SB38H	158
2SB38J	158
2SB38K	158
2SB38L	158
2SB38M	158
2SB38OR	158
2SB38R	158
2SB38X	158
2SB38Y	158
2SB39	102A
2SB39A	158
2SB39B	158
2SB39C	158
2SB39D	158
2SB39E	158
2SB39F	158
2SB39G	158
2SB39GN	158
2SB39H	158
2SB39J	158
2SB39K	158
2SB39L	158
2SB39M	158
2SB39OR	158
2SB39R	158
2SB39X	158
2SB39Y	158
2SB40	102A
2SB40A	158
2SB40B	158
2SB40C	158
2SB40D	158
2SB40E	158
2SB40F	158
2SB40G	158
2SB40GN	158
2SB40H	158
2SB40J	158
2SB40K	158
2SB40L	158
2SB40M	158
2SB40OR	158
2SB40R	158
2SB40X	158
2SB40Y	158
2SB41	104
2SB41A	127
2SB41B	127
2SB41C	127
2SB41D	127
2SB41E	127
2SB41F	127
2SB41G	127
2SB41GN	127
2SB41H	127
2SB41J	127
2SB41K	127
2SB41L	127
2SB41M	127
2SB41OR	127
2SB41R	127
2SB41X	127
2SB41Y	127
2SB42	104
2SB42A	127
2SB42B	127
2SB42C	127
2SB42D	127
2SB42E	127
2SB42F	127
2SB42G	127
2SB42GN	127
2SB42H	127
2SB42J	127
2SB42K	127
2SB42L	127
2SB42M	127
2SB42OR	127
2SB42R	127
2SB42X	127
2SB42Y	127
2SB43	102A
2SB43A	102A
2SB43B	126
2SB43C	126
2SB43D	126
2SB43E	126
2SB43F	126
2SB43G	126
2SB43GN	126
2SB43H	126
2SB43J	126
2SB43K	126
2SB43L	126
2SB43M	126
2SB43OR	126
2SB43R	126
2SB43X	126
2SB43Y	126
2SB44	102A
2SB44A	126
2SB44B	126
2SB44C	126
2SB44D	126
2SB44E	126
2SB44F	126
2SB44G	126
2SB44GN	126
2SB44H	126
2SB44J	126
2SB44K	126
2SB44L	126
2SB44M	126
2SB440R	126
2SB44R	126
2SB44X	126
2SB44Y	126
2SB46	102A
2SB46A	126
2SB46B	126
2SB46C	126
2SB46D	126
2SB46E	126
2SB46F	126
2SB46G	126
2SB46GN	126
2SB46H	126
2SB46J	126
2SB46K	126
2SB46L	126
2SB46M	126
2SB460R	126
2SB46R	126
2SB46X	126
2SB46Y	126
2SB47	102A
2SB47A	126
2SB47B	126
2SB47C	126
2SB47D	126
2SB47E	126
2SB47F	126
2SB47G	126
2SB47GN	126
2SB47H	126
2SB47J	126
2SB47K	126
2SB47L	126
2SB47M	126
2SB47OR	126
2SB47R	126
2SB47X	126
2SB47Y	126
2SB48	102
2SB48A	126
2SB48B	126
2SB48C	126
2SB48D	126
2SB48E	126
2SB48F	126
2SB48G	126
2SB48GN	126
2SB48H	126
2SB48J	126
2SB48K	126
2SB48L	126
2SB48M	126
2SB48OR	126
2SB48R	126
2SB48X	126
2SB48Y	126
2SB49	102
2SB49A	126
2SB49B	126
2SB49C	126
2SB49D	126
2SB49E	126
2SB49F	126
2SB49G	126
2SB49GN	126
2SB49H	126
2SB49J	126
2SB49K	126
2SB49L	126
2SB49M	126
2SB49OR	126
2SB49R	126
2SB49X	126
2SB49Y	126
2SB50	102
2SB50A	126
2SB50B	126
2SB50C	126
2SB50D	126
2SB50E	126
2SB50F	126
2SB50G	126
2SB50GN	126
2SB50H	126
2SB50J	126
2SB50K	126
2SB50L	126
2SB50M	126
2SB50OR	126
2SB50R	126
2SB50X	126
2SB50Y	126
2SB51	102
2SB51A	158
2SB51B	158
2SB51C	158
2SB51D	158
2SB51E	158
2SB51F	158
2SB51G	158
2SB51GN	158
2SB51H	158
2SB51J	158
2SB51K	158
2SB51L	158
2SB51M	158
2SB51OR	158
2SB51R	158
2SB51X	158
2SB51Y	158
2SB52	102
2SB52A	158
2SB52B	158
2SB52C	158
2SB52D	158
2SB52E	158
2SB52F	158
2SB52G	158
2SB52GN	158
2SB52H	158
2SB52J	158
2SB52K	158
2SB52L	158
2SB52M	158
2SB52OR	158
2SB52R	158
2SB52X	158
2SB52Y	158
2SB53	102
2SB53A	158
2SB53B	158
2SB53C	158
2SB53D	158
2SB53E	158
2SB53F	158
2SB53G	158
2SB53GN	158
2SB53H	158
2SB53J	158
2SB53K	158
2SB53L	158
2SB53M	158
2SB53OR	158
2SB53R	158
2SB53X	158
2SB53Y	158
2SB54	102A
2SB54A	126
2SB54B	102A
2SB54BA	126
2SB54C	126
2SB54D	126
2SB54E	102A
2SB54F	102A
2SB54G	126
2SB54GN	126
2SB54H	126
2SB54J	126
2SB54K	126
2SB54L	126
2SB54L1	126
2SB54M	126
2SB54OR	126
2SB54R	126
2SB54X	126
2SB54Y	102A
2SB55	102A
2SB55A	126
2SB55B	126
2SB55C	126
2SB55D	126
2SB55E	126
2SB55F	126
2SB55G	126
2SB55GN	126
2SB55H	126
2SB55J	126
2SB55K	126
2SB55L	126
2SB55M	126
2SB55OR	126
2SB55R	126
2SB55X	126
2SB55Y	126
2SB56	102A
2SB56/8020	102A
2SB56/117728	102A
2SB56/80205600	102A
2SB56A	102A
2SB56B	102A
2SB56C	102A
2SB56CK	126
2SB56D	126
2SB56E	126
2SB56F	126
2SB56G	126
2SB56GN	126
2SB56H	126
2SB56J	126
2SB56K	126
2SB56L	126
2SB56OR	126
2SB56R	126
2SB56X	126
2SB56Y	126
2SB57	102A
2SB57A	126
2SB57B	126
2SB57C	126
2SB57D	126
2SB57E	126
2SB57F	126
2SB57G	126
2SB57GN	126
2SB57H	126
2SB57J	126
2SB57K	126
2SB57L	126
2SB57M	126
2SB57OR	126
2SB57R	126
2SB57X	126
2SB57Y	126
2SB58	158
2SB59	102A
2SB59A	126
2SB59B	126
2SB59C	126
2SB59D	126
2SB59E	126
2SB59F	126
2SB59G	126
2SB59GN	126
2SB59J	126
2SB59K	126
2SB59L	126
2SB59M	126
2SB59OR	126
2SB59R	126
2SB59X	126
2SB59Y	126
2SB60	102A
2SB60A	102A
2SB60B	126
2SB60C	126
2SB60D	126
2SB60E	126
2SB60F	126
2SB60G	126
2SB60GN	126
2SB60H	126
2SB60J	126
2SB60K	126
2SB60L	126
2SB60M	126
2SB60OR	126
2SB60R	126
2SB60X	126
2SB60Y	126
2SB61	102A
2SB61A	158
2SB61B	158
2SB61C	158
2SB61D	158
2SB61E	158
2SB61F	158
2SB61G	158
2SB61GN	158
2SB61H	158
2SB61J	158
2SB61K	158
2SB61L	158
2SB61M	158
2SB61OR	158
2SB61R	158
2SB61X	158
2SB61Y	158
2SB62	104
2SB62A	127
2SB62B	127
2SB62C	127
2SB62D	127
2SB62E	127
2SB62F	127
2SB62G	127
2SB62GN	127
2SB62H	127
2SB62J	127
2SB62K	127
2SB62L	127
2SB62M	127
2SB62OR	127
2SB62R	127
2SB62X	127
2SB62Y	127
2SB63	131
2SB63A	127
2SB63B	127
2SB63C	127
2SB63D	127
2SB63E	127
2SB63F	127
2SB63G	127
2SB63GN	127
2SB63H	127
2SB63K	127
2SB63L	127
2SB63M	127
2SB63OR	127
2SB63R	127
2SB63X	127
2SB63Y	127
2SB64	121
2SB64A	127
2SB64B	127
2SB64C	127
2SB64D	127
2SB64E	127
2SB64F	127
2SB64G	127
2SB64H	127
2SB64J	127
2SB64K	127
2SB64L	127
2SB64M	127
2SB64OR	127
2SB64R	127
2SB64X	127
2SB64Y	127
2SB65	102A
2SB65A	158
2SB65B	158
2SB65C	158
2SB65D	158
2SB65F	158
2SB65G	158
2SB65GN	158
2SB65H	158
2SB65J	158
2SB65K	158
2SB65L	158
2SB65M	158
2SB65OR	158
2SB65R	158
2SB65X	158
2SB65Y	158
2SB66	102A
2SB66A	158
2SB66B	158
2SB66C	158
2SB66D	158
2SB66E	158
2SB66F	158
2SB66G	158
2SB66GN	158
2SB66H	102A
2SB66J	158
2SB66K	158
2SB66L	158
2SB66M	158
2SB66OR	158
2SB66R	158
2SB66X	158
2SB66Y	158

PART NUMBER	NTE REPLACEMENT
2SB67	102A
2SB67A	102A
2SB67B	158
2SB67C	158
2SB67D	158
2SB67E	158
2SB67F	158
2SB67G	158
2SB67GN	158
2SB67H	158
2SB67J	158
2SB67K	158
2SB67L	158
2SB67M	158
2SB67OR	158
2SB67R	158
2SB67X	158
2SB67Y	158
2SB68	158
2SB68A	158
2SB68B	158
2SB68C	158
2SB68D	158
2SB68E	158
2SB68F	158
2SB68G	158
2SB68GN	158
2SB68H	158
2SB68J	158
2SB68K	158
2SB68L	158
2SB68M	158
2SB68OR	158
2SB68R	158
2SB68X	158
2SB68Y	158
2SB69	121
2SB69A	127
2SB69B	127
2SB69C	127
2SB69D	127
2SB69E	127
2SB69F	127
2SB69G	127
2SB69GN	127
2SB69H	127
2SB69J	127
2SB69K	127
2SB69L	127
2SB69M	127
2SB69OR	127
2SB69R	127
2SB69X	127
2SB69Y	127
2SB70	158
2SB71	102
2SB71A	158
2SB71B	158
2SB71C	158
2SB71D	158
2SB71E	158
2SB71F	158
2SB71G	158
2SB71GN	158
2SB71H	158
2SB71J	158
2SB71K	158
2SB71L	158
2SB71M	158
2SB71OR	158
2SB71R	158
2SB71X	158
2SB71Y	158
2SB72	102
2SB72A	158
2SB72B	158
2SB72C	158
2SB72D	158
2SB72E	158
2SB72F	158
2SB72G	158
2SB72GN	158
2SB72H	158
2SB72J	158
2SB72K	158
2SB72L	158
2SB72M	158
2SB72OR	158
2SB72R	158
2SB72X	158
2SB72Y	158
2SB73	102A
2SB73/123	102A
2SB73/123806	102A
2SB73A	102A
2SB73A-1	158
2SB73B	102A
2SB73B/0573018	102A
2SB73C	102A
2SB73D	158
2SB73E	158
2SB73F	158
2SB73G	158
2SB73GN	158
2SB73GR	102A
2SB73H	158
2SB73J	158
2SB73K	158
2SB73L	158
2SB73M	158
2SB73OR	158
2SB73R	158
2SB73S	102A
2SB73X	158

PART NUMBER	NTE REPLACEMENT
2SB73Y	158
2SB74	160
2SB74A	158
2SB74B	158
2SB74C	158
2SB74D	158
2SB74E	158
2SB74F	158
2SB74G	158
2SB74GN	158
2SB74H	158
2SB74J	158
2SB74K	158
2SB74L	158
2SB74M	158
2SB74OR	158
2SB74R	158
2SB74X	158
2SB74Y	158
2SB75	102A
2SB75(B)	102A
2SB75(C)	102A
2SB75A	102A
2SB75AH	102A
2SB75B	102A
2SB75C	102A
2SB75C1	102A
2SB75C-4	126
2SB75C/0573153	102A
2SB75D	126
2SB75E	126
2SB75F	102A
2SB75F/0573125	102A
2SB75G	126
2SB75GN	126
2SB75H	102A
2SB75J	126
2SB75L	126
2SB75LB	102A
2SB75M	126
2SB75OR	126
2SB75R	126
2SB75X	126
2SB75Y	126
2SB76	102A
2SB76A	158
2SB76B	158
2SB76C	158
2SB76D	158
2SB76E	158
2SB76F	158
2SB76G	158
2SB76GN	158
2SB76H	158
2SB76J	158
2SB76K	158
2SB76L	158
2SB76M	158
2SB76OR	158
2SB76R	158
2SB76X	158
2SB76Y	158
2SB77	102A
2SB77(B)	102A
2SB77(C)	102A
2SB77(C)SHARP	102A
2SB77(V)	102A
2SB77-A	102A
2SB77-C	102A
2SB77-OR	102A
2SB77/1222	102A
2SB77/122244	102A
2SB77A	102A
2SB77A/P	102A
2SB77AA	102A
2SB77AB	102A
2SB77AC	102A
2SB77AD	102A
2SB77AH	102A
2SB77AP	102A
2SB77B	102A
2SB77B2	102A
2SB77B57B2-24	102A
2SB77B-11	102A
2SB77B/0573114	102A
2SB77C	102A
2SB77D	102A
2SB77E	102A
2SB77F	102A
2SB77G	102A
2SB77GN	102A
2SB77H	102A
2SB77K	102A
2SB77L	102A
2SB77M	102A
2SB77OR	102A
2SB77P	102A
2SB77PD	102A
2SB77R	102A
2SB77RED	102A
2SB77V	102A
2SB77VRED	102A
2SB77X	102A
2SB77Y	102A
2SB78	102A
2SB78A	158
2SB78B	158
2SB78C	158
2SB78D	158
2SB78E	158
2SB78F	158
2SB78G	158
2SB78GN	158
2SB78H	158

PART NUMBER	NTE REPLACEMENT
2SB78J	158
2SB78K	158
2SB78L	158
2SB78M	158
2SB78OR	158
2SB78R	158
2SB78X	158
2SB78Y	158
2SB79	102A
2SB79A	158
2SB79B	158
2SB79C	158
2SB79D	158
2SB79E	158
2SB79F	158
2SB79G	158
2SB79GN	158
2SB79H	158
2SB79J	158
2SB79K	158
2SB79L	158
2SB79M	158
2SB79OR	158
2SB79R	158
2SB79X	158
2SB79Y	158
2SB80	121
2SB80A	127
2SB80B	127
2SB80C	127
2SB80D	127
2SB80E	127
2SB80F	127
2SB80G	127
2SB80GN	127
2SB80H	127
2SB80J	127
2SB80K	127
2SB80L	127
2SB80M	127
2SB80OR	127
2SB80R	127
2SB80X	127
2SB80Y	127
2SB81	121
2SB81A	127
2SB81B	127
2SB81C	127
2SB81D	127
2SB81E	127
2SB81F	127
2SB81GN	127
2SB81H	127
2SB81J	127
2SB81K	127
2SB81L	127
2SB81M	127
2SB81OR	127
2SB81R	127
2SB81X	127
2SB81Y	127
2SB82	121
2SB82A	127
2SB82B	127
2SB82C	127
2SB82D	127
2SB82E	127
2SB82F	127
2SB82G	127
2SB82GN	127
2SB82H	127
2SB82J	127
2SB82K	127
2SB82L	127
2SB82M	127
2SB82OR	127
2SB82R	127
2SB82X	127
2SB82Y	127
2SB83	104
2SB83A	127
2SB83B	127
2SB83C	127
2SB83D	127
2SB83E	127
2SB83F	127
2SB83G	127
2SB83GN	127
2SB83H	127
2SB83J	127
2SB83K	127
2SB83L	127
2SB83M	127
2SB83OR	127
2SB83R	127
2SB83X	127
2SB83Y	127
2SB84	121
2SB84A	121
2SB84B	121
2SB84C	121
2SB84D	121
2SB84E	121
2SB84F	121
2SB84G	121
2SB84GN	121
2SB84H	121
2SB84J	121
2SB84K	121
2SB84L	121
2SB84M	121
2SB84OR	121
2SB84R	121
2SB84X	121

PART NUMBER	NTE REPLACEMENT
2SB84Y	121
2SB85	102
2SB85A	158
2SB85B	158
2SB85C	158
2SB85D	158
2SB85E	158
2SB85F	158
2SB85G	158
2SB85GN	158
2SB85H	158
2SB85J	158
2SB85K	158
2SB85L	158
2SB85M	158
2SB85OR	158
2SB85R	158
2SB85X	158
2SB85Y	158
2SB87	102
2SB87A	158
2SB87B	158
2SB87C	158
2SB87D	158
2SB87E	158
2SB87F	158
2SB87G	158
2SB87GN	158
2SB87H	158
2SB87J	158
2SB87K	158
2SB87L	158
2SB87M	158
2SB87OR	158
2SB87R	158
2SB87X	158
2SB87Y	158
2SB89	102A
2SB89A	102A
2SB89AH	102A
2SB89C	158
2SB89D	158
2SB89E	158
2SB89F	158
2SB89G	158
2SB89GN	158
2SB89H	102A
2SB89J	158
2SB89K	158
2SB89L	158
2SB89M	158
2SB89OR	158
2SB89R	158
2SB89X	158
2SB89Y	158
2SB90	102A
2SB90A	126
2SB90B	126
2SB90C	126
2SB90D	126
2SB90E	126
2SB90F	126
2SB90G	126
2SB90GN	126
2SB90H	126
2SB90J	126
2SB90K	126
2SB90L	126
2SB90M	126
2SB90OR	126
2SB90R	126
2SB90X	126
2SB90Y	126
2SB91	102A
2SB91A	126
2SB91B	126
2SB91C	126
2SB91D	126
2SB91E	126
2SB91F	126
2SB91G	126
2SB91GN	126
2SB91H	126
2SB91J	126
2SB91K	126
2SB91L	126
2SB91M	126
2SB91OR	126
2SB91R	126
2SB91X	126
2SB91Y	126
2SB92	102
2SB92A	158
2SB92B	158
2SB92C	158
2SB92D	158
2SB92E	158
2SB92F	158
2SB92G	158
2SB92GN	158
2SB92H	158
2SB92J	158
2SB92K	158
2SB92L	158
2SB92M	158
2SB92X	158
2SB92Y	158
2SB94	102A
2SB94A	158
2SB94B	158
2SB94C	158
2SB94D	158
2SB94E	158
2SB94F	158

PART NUMBER	NTE REPLACEMENT
2SB94G	158
2SB94GN	158
2SB94H	158
2SB94J	158
2SB94K	158
2SB94M	158
2SB94OR	158
2SB94R	158
2SB94X	158
2SB94Y	158
2SB95	102
2SB95A	158
2SB95B	158
2SB95C	158
2SB95D	158
2SB95E	158
2SB95F	158
2SB95G	158
2SB95GN	158
2SB95H	158
2SB95J	158
2SB95L	158
2SB95M	158
2SB95OR	158
2SB95R	158
2SB95X	158
2SB95Y	158
2SB97	102A
2SB97A	158
2SB97B	158
2SB97C	158
2SB97D	158
2SB97F	158
2SB97G	158
2SB97GN	158
2SB97H	158
2SB97K	158
2SB97L	158
2SB97M	158
2SB97OR	158
2SB97R	158
2SB97X	158
2SB97Y	158
2SB98	102
2SB98A	158
2SB98B	158
2SB98C	158
2SB98D	158
2SB98E	158
2SB98F	158
2SB98G	158
2SB98GN	158
2SB98H	158
2SB98J	158
2SB98K	158
2SB98L	158
2SB98M	158
2SB98OR	158
2SB98R	158
2SB98X	158
2SB98Y	158
2SB99	158
2SB99A	158
2SB99B	158
2SB99C	158
2SB99D	158
2SB99E	158
2SB99F	158
2SB99G	158
2SB99GN	158
2SB99H	158
2SB99J	158
2SB99K	158
2SB99L	158
2SB99M	158
2SB99OR	158
2SB99R	158
2SB99X	158
2SB99Y	158
2SB100	102
2SB100(BRIDGE)	5312
2SB100A	158
2SB100B	158
2SB100C	158
2SB100D	158
2SB100E	158
2SB100F	158
2SB100G	158
2SB100GN	158
2SB100H	158
2SB100J	158
2SB100K	158
2SB100L	158
2SB100M	158
2SB1000R	158
2SB100R	158
2SB100X	158
2SB100Y	158
2SB101	102
2SB101A	158
2SB101B	158
2SB101C	158
2SB101D	158
2SB101E	158
2SB101F	158
2SB101G	158
2SB101GN	158
2SB101H	158
2SB101J	158
2SB101K	158
2SB101L	158
2SB101M	158
2SB1010R	158
2SB101R	158

PART NUMBER	NTE REPLACEMENT
2SB101X	158
2SB101Y	158
2SB102	102
2SB102A	158
2SB102B	158
2SB102C	158
2SB102D	158
2SB102E	158
2SB102F	158
2SB102G	158
2SB102GN	158
2SB102H	158
2SB102J	158
2SB102K	158
2SB102L	158
2SB102M	158
2SB102OR	158
2SB102R	158
2SB102X	158
2SB102Y	158
2SB103	100
2SB103A	158
2SB103B	158
2SB103C	158
2SB103D	158
2SB103E	158
2SB103F	158
2SB103G	158
2SB103GN	158
2SB103H	158
2SB103J	158
2SB103K	158
2SB103L	158
2SB103M	158
2SB103OR	158
2SB103R	158
2SB103X	158
2SB103Y	158
2SB104	100
2SB104A	158
2SB104B	158
2SB104C	158
2SB104D	158
2SB104E	158
2SB104F	158
2SB104G	158
2SB104GN	158
2SB104H	158
2SB104J	158
2SB104K	158
2SB104L	158
2SB104M	158
2SB104OR	158
2SB104R	158
2SB104X	158
2SB104Y	158
2SB105	158
2SB105A	158
2SB105B	158
2SB105C	158
2SB105D	158
2SB105E	158
2SB105F	158
2SB105G	158
2SB105GN	158
2SB105H	158
2SB105K	158
2SB105L	158
2SB105M	158
2SB105OR	158
2SB105R	158
2SB105X	158
2SB105Y	158
2SB106	158
2SB107	121
2SB107A	121
2SB107B	127
2SB107C	127
2SB107D	127
2SB107E	127
2SB107F	127
2SB107G	127
2SB107GN	127
2SB107H	127
2SB107J	127
2SB107K	127
2SB107L	127
2SB107M	127
2SB107OR	127
2SB107R	127
2SB107X	127
2SB107Y	127
2SB108	158
2SB108A	158
2SB108B	158
2SB108C	158
2SB108D	158
2SB108E	158
2SB108F	158
2SB108G	158
2SB108GN	158
2SB108H	158
2SB108J	158
2SB108K	158
2SB108L	158
2SB108M	158
2SB108OR	158
2SB108X	158
2SB108Y	158
2SB109	158
2SB110	102A
2SB110A	158
2SB110B	158
2SB110C	158

PART NUMBER	NTE REPLACEMENT
2SB110D	158
2SB110E	158
2SB110F	158
2SB110G	158
2SB110GN	158
2SB110H	158
2SB110J	158
2SB110K	158
2SB110L	158
2SB110M	158
2SB110OR	158
2SB110R	158
2SB110X	158
2SB110Y	158
2SB111	102A
2SB111A	158
2SB111B	158
2SB111C	158
2SB111D	158
2SB111E	158
2SB111F	158
2SB111G	158
2SB111GN	158
2SB111H	158
2SB111J	158
2SB111K	102A
2SB111L	158
2SB111M	158
2SB111OR	158
2SB111R	158
2SB111X	158
2SB111Y	158
2SB112	102A
2SB112A	158
2SB112B	158
2SB112C	158
2SB112D	158
2SB112E	158
2SB112F	158
2SB112G	158
2SB112H	158
2SB112J	158
2SB112K	158
2SB112L	158
2SB112M	158
2SB112OR	158
2SB112R	158
2SB112X	158
2SB112Y	158
2SB113	102A
2SB113A	158
2SB113B	158
2SB113C	158
2SB113D	158
2SB113E	158
2SB113F	158
2SB113G	158
2SB113GN	158
2SB113H	158
2SB113J	158
2SB113K	158
2SB113L	158
2SB113M	158
2SB113OR	158
2SB113R	158
2SB113X	158
2SB113Y	158
2SB114	102A
2SB114A	158
2SB114B	158
2SB114C	158
2SB114D	158
2SB114E	158
2SB114F	158
2SB114G	158
2SB114GN	158
2SB114H	158
2SB114J	158
2SB114K	158
2SB114L	158
2SB114M	158
2SB114OR	158
2SB114R	158
2SB114X	158
2SB114Y	158
2SB115	102A
2SB115A	158
2SB115B	158
2SB115C	158
2SB115D	158
2SB115E	158
2SB115F	158
2SB115G	158
2SB115GN	158
2SB115H	158
2SB115J	158
2SB115K	158
2SB115L	158
2SB115M	158
2SB115OR	158
2SB115R	158
2SB115X	158
2SB115Y	158
2SB116	102A
2SB116A	158
2SB116B	158
2SB116C	158
2SB116D	158
2SB116E	158
2SB116F	158
2SB116G	158
2SB116GN	158
2SB116H	158
2SB116J	158

PART NUMBER	NTE REPLACEMENT
2SB116K	158
2SB116L	158
2SB116M	158
2SB116OR	158
2SB116R	158
2SB116X	158
2SB116Y	158
2SB117	102A
2SB117A	158
2SB117B	158
2SB117C	158
2SB117D	158
2SB117E	158
2SB117F	158
2SB117G	158
2SB117GN	158
2SB117H	158
2SB117J	158
2SB117K	102A
2SB117L	158
2SB117M	158
2SB117OR	158
2SB117R	158
2SB117X	158
2SB117Y	158
2SB118	158
2SB119	121
2SB119A	121
2SB119B	127
2SB119C	127
2SB119D	127
2SB119E	127
2SB119F	127
2SB119G	127
2SB119GN	127
2SB119H	127
2SB119J	127
2SB119K	127
2SB119L	127
2SB119M	127
2SB119OR	127
2SB119R	127
2SB119X	127
2SB119Y	127
2SB120	102A
2SB120A	158
2SB120B	158
2SB120C	158
2SB120D	158
2SB120E	158
2SB120F	158
2SB120G	158
2SB120GN	158
2SB120H	158
2SB120J	158
2SB120K	158
2SB120L	158
2SB120M	158
2SB120OR	158
2SB120R	158
2SB120X	158
2SB120Y	158
2SB122	121
2SB122A	127
2SB122B	127
2SB122C	127
2SB122D	127
2SB122E	127
2SB122F	127
2SB122G	127
2SB122GN	127
2SB122H	127
2SB122J	127
2SB122K	127
2SB122L	127
2SB122M	127
2SB122OR	127
2SB122R	127
2SB122X	127
2SB122Y	127
2SB123	104
2SB123A	104
2SB123B	127
2SB123C	127
2SB123D	127
2SB123E	127
2SB123F	127
2SB123G	127
2SB123GN	127
2SB123H	127
2SB123J	127
2SB123K	127
2SB123L	127
2SB123M	127
2SB123OR	127
2SB123R	127
2SB123X	127
2SB123Y	127
2SB124	121
2SB124A	127
2SB124B	127
2SB124C	127
2SB124D	127
2SB124E	127
2SB124F	127
2SB124G	127
2SB124H	127
2SB124J	127
2SB124K	127
2SB124L	127
2SB124M	127
2SB124OR	127
2SB124R	127
2SB124X	127
2SB124Y	127
2SB126	121
2SB126A	121
2SB126B	127
2SB126C	127
2SB126D	127
2SB126E	127
2SB126F	121
2SB126G	127
2SB126GN	127
2SB126H	127
2SB126J	127
2SB126K	127
2SB126L	127
2SB126M	127
2SB126OR	127
2SB126P	127
2SB126R	127
2SB126V	121
2SB126X	127
2SB126Y	127
2SB127	121
2SB127A	121
2SB127B	127
2SB127C	127
2SB127D	127
2SB127E	127
2SB127F	127
2SB127G	127
2SB127GN	127
2SB127H	127
2SB127J	127
2SB127K	127
2SB127L	127
2SB127M	127
2SB127OR	127
2SB127R	127
2SB127X	127
2SB127Y	127
2SB128	121
2SB128A	121
2SB128B	127
2SB128C	127
2SB128D	127
2SB128E	127
2SB128F	127
2SB128G	127
2SB128GN	127
2SB128H	127
2SB128J	127
2SB128K	127
2SB128L	127
2SB128M	127
2SB128OR	127
2SB128R	127
2SB128V	121
2SB128X	127
2SB128Y	127
2SB129	121
2SB129A	127
2SB129B	127
2SB129C	127
2SB129D	127
2SB129E	127
2SB129F	127
2SB129G	127
2SB129GN	127
2SB129H	127
2SB129J	127
2SB129K	127
2SB129L	127
2SB129M	127
2SB129OR	127
2SB129R	127
2SB129X	127
2SB129Y	127
2SB130	131
2SB130A	131
2SB130B	127
2SB130C	127
2SB130D	127
2SB130E	127
2SB130F	127
2SB130G	127
2SB130GN	127
2SB130H	127
2SB130J	127
2SB130K	127
2SB130L	127
2SB130M	127
2SB130OR	127
2SB130R	127
2SB130X	127
2SB130Y	127
2SB131	121
2SB131A	121
2SB131B	127
2SB131C	127
2SB131D	127
2SB131E	127
2SB131F	127
2SB131G	127
2SB131GN	127
2SB131H	127
2SB131J	127
2SB131K	127
2SB131L	127
2SB131M	127
2SB131OR	127
2SB131R	127
2SB131X	127
2SB131Y	127
2SB132	121
2SB132A	121
2SB132B	127
2SB132C	127
2SB132D	127
2SB132E	127
2SB132F	127
2SB132G	127
2SB132GN	127
2SB132H	127
2SB132J	127
2SB132L	127
2SB132M	127
2SB132OR	127
2SB132R	127
2SB132X	127
2SB132Y	127
2SB134	102A
2SB134-D	102A
2SB134-E	102A
2SB134A	158
2SB134B	158
2SB134C	158
2SB134D	158
2SB134E	102A
2SB134F	158
2SB134G	158
2SB134GN	158
2SB134H	158
2SB134J	158
2SB134K	158
2SB134L	158
2SB134M	158
2SB134OR	158
2SB134R	158
2SB134X	158
2SB134Y	158
2SB135	102A
2SB135(C)	158
2SB135A	158
2SB135B	102A
2SB135C	102A
2SB135D	158
2SB135E	102A
2SB135F	158
2SB135G	158
2SB135GN	158
2SB135H	158
2SB135J	158
2SB135K	158
2SB135L	158
2SB135M	158
2SB135OR	158
2SB135R	158
2SB135X	158
2SB135Y	158
2SB136	102A
2SB136(C)	158
2SB136-2	102A
2SB136-3	102A
2SB136A	102A
2SB136B	102A
2SB136C	102A
2SB136D	158
2SB136E	158
2SB136F	158
2SB136G	158
2SB136GN	158
2SB136H	158
2SB136J	158
2SB136K	158
2SB136L	158
2SB136M	158
2SB136OR	158
2SB136R	158
2SB136U	102A
2SB136X	158
2SB137	121
2SB137A	127
2SB137B	127
2SB137C	127
2SB137D	127
2SB137E	127
2SB137F	127
2SB137G	127
2SB137GN	127
2SB137H	127
2SB137K	127
2SB137L	127
2SB137OR	127
2SB137R	127
2SB137X	127
2SB137Y	127
2SB138	121
2SB138A	127
2SB138B	127
2SB138C	127
2SB138D	127
2SB138E	127
2SB138G	127
2SB138GN	127
2SB138H	127
2SB138J	127
2SB138K	127
2SB138L	127
2SB138M	127
2SB138OR	127
2SB138R	127
2SB138X	127
2SB138Y	127
2SB140	104
2SB140A	127
2SB140B	127
2SB140C	127
2SB140D	127
2SB140E	127
2SB140F	127
2SB140G	127
2SB140GN	127
2SB140H	127
2SB140J	127
2SB140K	127
2SB140L	127
2SB140M	127
2SB140OR	127
2SB140X	127
2SB140Y	127
2SB141	104
2SB142	104
2SB142A	127
2SB142B	104
2SB142C	104
2SB142D	127
2SB142E	127
2SB142F	127
2SB142G	127
2SB142GN	127
2SB142H	127
2SB142J	127
2SB142K	127
2SB142L	127
2SB142M	127
2SB142OR	127
2SB142R	127
2SB142X	127
2SB142Y	127
2SB143	104
2SB143A	127
2SB143B	127
2SB143C	127
2SB143D	127
2SB143E	127
2SB143F	127
2SB143G	127
2SB143GN	127
2SB143H	127
2SB143J	127
2SB143K	127
2SB143L	127
2SB143M	127
2SB143OR	127
2SB143P	104
2SB143X	127
2SB143Y	127
2SB144	104
2SB144A	127
2SB144B	127
2SB144C	127
2SB144D	127
2SB144E	127
2SB144F	127
2SB144G	127
2SB144GN	127
2SB144H	127
2SB144J	127
2SB144K	127
2SB144L	127
2SB144M	127
2SB144OR	127
2SB144P	104
2SB144R	127
2SB144X	127
2SB144Y	127
2SB145	104
2SB145A	127
2SB145B	127
2SB145C	127
2SB145D	127
2SB145E	127
2SB145F	127
2SB145G	127
2SB145GN	127
2SB145H	127
2SB145J	127
2SB145K	127
2SB145L	127
2SB145M	127
2SB145OR	127
2SB145R	127
2SB145X	127
2SB145Y	127
2SB146	104
2SB146A	127
2SB146B	127
2SB146C	127
2SB146D	127
2SB146E	127
2SB146F	127
2SB146G	127
2SB146GN	127
2SB146H	127
2SB146J	127
2SB146K	127
2SB146L	127
2SB146M	127
2SB146OR	127
2SB146R	127
2SB146X	127
2SB146Y	127
2SB147	104
2SB147A	127
2SB147B	127
2SB147C	127
2SB147D	127
2SB147E	127
2SB147F	127
2SB147G	127
2SB147H	127
2SB147J	127
2SB147K	127
2SB147L	127
2SB147M	127
2SB147OR	127
2SB147X	127
2SB147Y	127
2SB149	104
2SB149-N	127
2SB149A	127
2SB149B	127
2SB149C	127
2SB149D	127
2SB149E	127
2SB149F	127
2SB149G	127
2SB149GN	127
2SB149H	127
2SB149J	127
2SB149K	127
2SB149L	127
2SB149M	127
2SB149OR	127
2SB149R	127
2SB149X	127
2SB149Y	127
2SB150	158
2SB150A	158
2SB150B	158
2SB150C	158
2SB150D	158
2SB150E	158
2SB150F	158
2SB150G	158
2SB150GN	158
2SB150H	158
2SB150J	158
2SB150K	158
2SB150L	158
2SB150M	158
2SB150OR	158
2SB150R	158
2SB150X	158
2SB150Y	158
2SB151	104
2SB151A	127
2SB151B	127
2SB151C	127
2SB151D	127
2SB151E	127
2SB151F	127
2SB151G	127
2SB151GN	127
2SB151H	127
2SB151J	127
2SB151K	127
2SB151L	127
2SB151M	127
2SB151OR	127
2SB151R	127
2SB151X	127
2SB151Y	127
2SB152	104
2SB152A	127
2SB152B	127
2SB152C	127
2SB152D	127
2SB152E	127
2SB152F	127
2SB152G	127
2SB152GN	127
2SB152H	127
2SB152J	127
2SB152K	127
2SB152L	127
2SB152M	127
2SB152OR	127
2SB152R	127
2SB152X	127
2SB152Y	127
2SB153	102
2SB153A	158
2SB153B	158
2SB153C	158
2SB153D	158
2SB153E	158
2SB153F	158
2SB153G	158
2SB153GN	158
2SB153H	158
2SB153J	158
2SB153K	158
2SB153L	158
2SB153M	158
2SB153OR	158
2SB153R	158
2SB153X	158
2SB153Y	158
2SB154	102
2SB154A	158
2SB154B	158
2SB154C	158
2SB154D	158
2SB154E	158
2SB154F	158
2SB154G	158
2SB154GN	158
2SB154H	158
2SB154J	158
2SB154K	158
2SB154L	158
2SB154M	158
2SB154OR	158
2SB154R	158
2SB154X	158
2SB154Y	158
2SB155	102A
2SB155A	102A
2SB155B	102A
2SB155C	158
2SB155D	158
2SB155E	158
2SB155F	158
2SB155G	158
2SB155GN	158
2SB155H	158
2SB155J	158
2SB155K	158
2SB155L	158
2SB155M	158
2SB155OR	158
2SB155R	158
2SB155X	158
2SB155Y	158
2SB156	102A
2SB156-A	102A
2SB156/7825B	102A
2SB156A	102A
2SB156AA	102A
2SB156AB	102A
2SB156AC	102A
2SB156AD	102A
2SB156B	102A
2SB156B3	102A
2SB156BK	158
2SB156C	102A
2SB156D	102A
2SB156E	158
2SB156F	158
2SB156G	158
2SB156GN	158
2SB156H	158
2SB156J	158
2SB156K	158
2SB156L	158
2SB156M	158
2SB156OR	158
2SB156P	102A
2SB156R	158
2SB156X	158
2SB156Y	158
2SB157	102A
2SB157A	158
2SB157B	158
2SB157C	158
2SB157D	158
2SB157E	158
2SB157F	158
2SB157G	158
2SB157GN	158
2SB157H	158
2SB157J	158
2SB157K	158
2SB157L	158
2SB157M	158
2SB157OR	158
2SB157R	158
2SB157X	158
2SB157Y	158
2SB158	102A
2SB158A	160
2SB158B	160
2SB158C	160
2SB158D	160
2SB158E	160
2SB158F	160
2SB158G	160
2SB158GN	160
2SB158H	160
2SB158J	160
2SB158K	160
2SB158L	160
2SB158M	160
2SB158OR	160
2SB158R	160
2SB158X	160
2SB158Y	160
2SB159	102A
2SB159A	160
2SB159B	160
2SB159C	160
2SB159D	160
2SB159E	160
2SB159F	160
2SB159G	160
2SB159GN	160
2SB159H	160
2SB159J	160
2SB159K	160
2SB159L	160
2SB159M	160
2SB159OR	160
2SB159R	160
2SB159X	160
2SB159Y	160
2SB160	102A
2SB160A	160
2SB160B	160
2SB160C	160
2SB160D	160
2SB160E	160
2SB160F	160
2SB160G	160
2SB160GN	160
2SB160H	160
2SB160J	160
2SB160K	160
2SB160L	160
2SB160M	160
2SB160OR	160
2SB160R	160
2SB160X	160
2SB160Y	160
2SB161	102
2SB161A	158
2SB161B	158
2SB161C	158
2SB161D	158
2SB161E	158
2SB161F	158
2SB161G	158
2SB161GN	158
2SB161H	158
2SB161J	158
2SB161K	158
2SB161L	158
2SB161M	158
2SB161OR	158
2SB161R	158
2SB161X	158
2SB161Y	158
2SB162	102
2SB162A	158
2SB162B	158
2SB162C	158
2SB162D	158
2SB162E	158
2SB162F	158
2SB162G	158
2SB162GN	158
2SB162H	158
2SB162J	158
2SB162K	158
2SB162L	158
2SB162M	158
2SB162OR	158
2SB162R	158
2SB162X	158
2SB162Y	158
2SB163	102
2SB163A	158
2SB163B	158
2SB163C	158
2SB163D	158
2SB163E	158
2SB163F	158
2SB163G	158
2SB163GN	158
2SB163H	158
2SB163J	158
2SB163K	158
2SB163L	158
2SB163M	158
2SB163OR	158
2SB163R	158
2SB163X	158
2SB163Y	158
2SB164	102
2SB164A	158
2SB164B	158
2SB164C	158
2SB164D	158
2SB164E	158
2SB164F	158
2SB164G	158
2SB164GN	158
2SB164H	158
2SB164J	158
2SB164L	158
2SB164M	158
2SB164OR	158
2SB164R	158
2SB164X	158
2SB164Y	158
2SB165	102
2SB165A	158
2SB165B	158
2SB165C	158
2SB165D	158
2SB165E	158
2SB165F	158
2SB165G	158
2SB165GN	158
2SB165H	158
2SB165J	158
2SB165K	158
2SB165M	158
2SB165OR	158
2SB165R	158
2SB165X	158
2SB165Y	158
2SB166	102
2SB166A	158
2SB166B	158
2SB166C	158
2SB166D	158
2SB166E	158
2SB166F	158
2SB166G	158
2SB166GN	158
2SB166H	158
2SB166J	158
2SB166K	158
2SB166L	158
2SB166M	158
2SB166OR	158
2SB166R	158
2SB166X	158
2SB166Y	158
2SB167	158
2SB167A	158
2SB167B	158
2SB167BK	158
2SB167C	158

PART NUMBER	NTE REPLACEMENT
2SB167D	158
2SB167E	158
2SB167F	158
2SB167G	158
2SB167GN	158
2SB167H	158
2SB167J	158
2SB167K	158
2SB167L	158
2SB167M	158
2SB167OR	158
2SB167R	158
2SB167X	158
2SB167Y	158
2SB168	102A
2SB168A	158
2SB168B	158
2SB168C	158
2SB168D	158
2SB168E	158
2SB168F	158
2SB168G	158
2SB168GN	158
2SB168H	158
2SB168J	158
2SB168K	158
2SB168L	158
2SB168M	158
2SB168OR	158
2SB168R	158
2SB168X	158
2SB168Y	158
2SB169	102A
2SB169A	158
2SB169B	158
2SB169C	158
2SB169D	158
2SB169E	158
2SB169F	158
2SB169G	158
2SB169GN	158
2SB169H	158
2SB169J	158
2SB169K	158
2SB169L	158
2SB169M	158
2SB169OR	158
2SB169R	158
2SB169X	158
2SB169Y	158
2SB170	102A
2SB170A	158
2SB170B	158
2SB170C	158
2SB170D	158
2SB170E	158
2SB170F	158
2SB170G	158
2SB170GN	158
2SB170H	158
2SB170J	158
2SB170K	158
2SB170L	158
2SB170M	158
2SB170OR	158
2SB170R	158
2SB170X	158
2SB170Y	158
2SB171	158
2SB171A	158
2SB171B	158
2SB171C	158
2SB171D	158
2SB171E	158
2SB171F	158
2SB171G	158
2SB171GN	158
2SB171H	158
2SB171J	158
2SB171K	158
2SB171L	158
2SB171M	158
2SB171OR	158
2SB171X	158
2SB171Y	158
2SB172	158
2SB172A	158
2SB172A-1	158
2SB172A-F	158
2SB172AF	158
2SB172AL	158
2SB172B	158
2SB172C	158
2SB172D	158
2SB172E	158
2SB172F	158
2SB172FN	158
2SB172G	158
2SB172GN	158
2SB172H	158
2SB172J	158
2SB172K	158
2SB172L	158
2SB172M	158
2SB172OR	158
2SB172P	158
2SB172R	158
2SB172X	158
2SB172Y	158
2SB173	102A
2SB173(C)	158
2SB173A	102A
2SB173B	102A
2SB173BL	158
2SB173C	102A
2SB173CL	158
2SB173D	158
2SB173E	158
2SB173F	158
2SB173G	158
2SB173GN	158
2SB173H	158
2SB173J	158
2SB173K	158
2SB173L	102A
2SB173M	158
2SB173OR	158
2SB173R	158
2SB173X	158
2SB173Y	158
2SB174	102A
2SB174A	158
2SB174B	158
2SB174C	158
2SB174D	158
2SB174E	158
2SB174F	158
2SB174G	158
2SB174GN	158
2SB174H	158
2SB174K	158
2SB174L	158
2SB174M	158
2SB174OR	158
2SB174R	158
2SB174X	158
2SB174Y	158
2SB175	158
2SB175(A)	158
2SB175(B)	158
2SB175(C)	158
2SB175A	158
2SB175B	158
2SB175B-1	158
2SB175BL	158
2SB175C	158
2SB175CL	158
2SB175D	158
2SB175E	158
2SB175F	158
2SB175G	158
2SB175GN	158
2SB175H	158
2SB175L	158
2SB175M	158
2SB175OR	158
2SB175R	158
2SB175X	158
2SB175Y	158
2SB176	102A
2SB176-O	102A
2SB176-P	102A
2SB176-PR	102A
2SB176A	158
2SB176B	102A
2SB176C	158
2SB176D	158
2SB176E	158
2SB176F	158
2SB176G	158
2SB176GN	158
2SB176H	158
2SB176J	158
2SB176K	158
2SB176L	158
2SB176M	102A
2SB176O	158
2SB176OR	158
2SB176P	102A
2SB176PL	158
2SB176PR	158
2SB176PRC	102A
2SB176R	102A
2SB176R(1)	158
2SB176RG	158
2SB176X	158
2SB176Y	158
2SB177	102A
2SB177A	158
2SB177B	158
2SB177C	158
2SB177D	158
2SB177E	158
2SB177F	158
2SB177G	158
2SB177GN	158
2SB177H	158
2SB177K	158
2SB177L	158
2SB177M	158
2SB177OR	158
2SB177R	158
2SB177X	158
2SB177Y	158
2SB178	102A
2SB178-O	102A
2SB178-OR	102A
2SB178-S	102A
2SB178A	102A
2SB178B	102A
2SB178C	102A
2SB178D	102A
2SB178E	102A
2SB178F	102A
2SB178G	102A
2SB178GN	102A
2SB178H	102A
2SB178J	102A
2SB178K	102A
2SB178L	102A
2SB178M	102A
2SB178N	102A
2SB178OR	102A
2SB178R	102A
2SB178S	102A
2SB178T	102A
2SB178TC	102A
2SB178TS	102A
2SB178U	102A
2SB178V	102A
2SB178X	102A
2SB178Y	102A
2SB179	160
2SB180	158
2SB180A	158
2SB181	158
2SB181A	158
2SB182	160
2SB183	102A
2SB183A	158
2SB183B	158
2SB183C	158
2SB183D	158
2SB183E	158
2SB183F	158
2SB183G	158
2SB183GN	158
2SB183H	158
2SB183J	158
2SB183K	158
2SB183L	158
2SB183M	158
2SB183OR	158
2SB183R	158
2SB183X	158
2SB183Y	158
2SB184	102A
2SB184A	158
2SB184B	158
2SB184C	158
2SB184D	158
2SB184E	158
2SB184F	158
2SB184G	158
2SB184GN	158
2SB184H	158
2SB184J	158
2SB184K	158
2SB184L	158
2SB184M	158
2SB184OR	158
2SB184R	158
2SB184X	158
2SB184Y	158
2SB185	102A
2SB185(0)	102A
2SB185(O)	158
2SB185(P)	158
2SB185-O	126
2SB185A	158
2SB185AA	102A
2SB185B	158
2SB185C	158
2SB185D	158
2SB185E	158
2SB185F	102A
2SB185G	158
2SB185GN	158
2SB185H	158
2SB185I	158
2SB185J	158
2SB185L	158
2SB185M	158
2SB185OR	158
2SB185P	102A
2SB185R	158
2SB185X	158
2SB185Y	158
2SB186	102A
2SB186(0)	102A
2SB186(IR)	158
2SB186(O)	102A
2SB186-1	102A
2SB186-7	102A
2SB186-K	102A
2SB186-O	102A
2SB186-OR	102A
2SB186A	102A
2SB186AG	102A
2SB186B	102A
2SB186BY	102A
2SB186C	102A
2SB186D	102A
2SB186E	102A
2SB186F	102A
2SB186G	102A
2SB186GN	102A
2SB186H	102A
2SB186J	102A
2SB186K	102A
2SB186L	102A
2SB186M	102A
2SB186O	102A
2SB186OR	102A
2SB186R	102A
2SB186X	102A
2SB186Y	102A
2SB187	158
2SB187(1)	102A
2SB187(K)	102A
2SB187-1	102A
2SB187-OR	102A
2SB187A	102A
2SB187AA	102A
2SB187B	102A
2SB187BK	102A
2SB187C	102A
2SB187D	102A
2SB187E	102A
2SB187F	102A
2SB187G	102A
2SB187GN	102A
2SB187H	102A
2SB187K	102A
2SB187L	102A
2SB187M	102A
2SB187OR	102A
2SB187R	102A
2SB187RED	102A
2SB187S	102A
2SB187TV	102A
2SB187X	102A
2SB187Y	102A
2SB187YEL	102A
2SB188	102A
2SB188A	158
2SB188B	158
2SB188C	158
2SB188D	158
2SB188E	158
2SB188F	158
2SB188G	158
2SB188GN	158
2SB188H	158
2SB188J	158
2SB188K	158
2SB188L	158
2SB188M	158
2SB188OR	158
2SB188R	158
2SB188X	158
2SB188Y	158
2SB189	102A
2SB189A	158
2SB189B	158
2SB189C	158
2SB189D	158
2SB189E	158
2SB189F	158
2SB189G	158
2SB189GN	158
2SB189H	158
2SB189J	158
2SB189K	158
2SB189L	158
2SB189M	158
2SB189OR	158
2SB189R	158
2SB189X	158
2SB189Y	158
2SB190	158
2SB192	158
2SB193	158
2SB194	158
2SB195	158
2SB196	158
2SB197	158
2SB198	158
2SB199	102
2SB199A	158
2SB199B	158
2SB199C	158
2SB199D	158
2SB199E	158
2SB199F	158
2SB199G	158
2SB199GN	158
2SB199H	158
2SB199J	158
2SB199L	158
2SB199M	158
2SB199OR	158
2SB199R	158
2SB199X	158
2SB199Y	158
2SB200	102
2SB200(BRIDGE)	5313
2SB200A	102
2SB200B	158
2SB200C	158
2SB200D	158
2SB200E	158
2SB200F	158
2SB200G	158
2SB200GN	158
2SB200H	158
2SB200J	158
2SB200K	158
2SB200L	158
2SB200M	158
2SB200OR	158
2SB200R	158
2SB200X	158
2SB200Y	158
2SB201	102A
2SB202	102
2SB202A	158
2SB202B	158
2SB202C	158
2SB202D	158
2SB202E	158
2SB202F	158
2SB202G	158
2SB202GN	158
2SB202H	158
2SB202J	158
2SB202L	158
2SB202M	158
2SB202OR	158
2SB202R	158
2SB202X	158
2SB202Y	158
2SB203A	158
2SB203AA	102
2SB203B	158
2SB203C	158
2SB203D	158
2SB203E	158
2SB203F	158
2SB203G	158
2SB203GN	158
2SB203H	158
2SB203J	158
2SB203K	158
2SB203L	158
2SB203M	158
2SB203OR	158
2SB203R	158
2SB203X	158
2SB203Y	158
2SB204	179
2SB205	179
2SB206	179
2SB207	179
2SB208	179
2SB209	179
2SB210	179
2SB211	179
2SB212	179
2SB213	179
2SB214	179
2SB215	121
2SB215A	127
2SB215B	127
2SB215C	127
2SB215D	127
2SB215E	127
2SB215F	127
2SB215G	127
2SB215GN	127
2SB215H	127
2SB215J	127
2SB215K	127
2SB215L	127
2SB215M	127
2SB215OR	127
2SB215R	127
2SB215X	127
2SB215Y	127
2SB216	121
2SB216A	121
2SB216B	127
2SB216C	127
2SB216D	127
2SB216E	127
2SB216F	127
2SB216G	127
2SB216GN	127
2SB216H	127
2SB216J	127
2SB216K	127
2SB216L	127
2SB216M	127
2SB216OR	127
2SB216R	127
2SB216X	127
2SB216Y	127
2SB217	121
2SB217A	121
2SB217B	127
2SB217C	127
2SB217D	127
2SB217E	127
2SB217F	127
2SB217G	121
2SB217GN	127
2SB217H	127
2SB217K	127
2SB217L	127
2SB217M	127
2SB217OR	127
2SB217R	127
2SB217U	121
2SB217X	127
2SB217Y	127
2SB218	102
2SB218A	158
2SB218B	158
2SB218C	158
2SB218D	158
2SB218E	158
2SB218F	158
2SB218G	158
2SB218GN	158
2SB218H	158
2SB218J	158
2SB218K	158
2SB218L	158
2SB218M	158
2SB218OR	158
2SB218R	158
2SB218X	158
2SB218Y	158
2SB219	102
2SB219A	158
2SB219B	158
2SB219E	158
2SB219F	158
2SB219G	158
2SB219H	158
2SB219J	158
2SB219K	158
2SB219L	158
2SB219R	158
2SB219X	158
2SB219Y	158
2SB220	102
2SB220A	102
2SB220B	158
2SB220C	158
2SB220D	158
2SB220E	158
2SB220F	158
2SB220GN	158
2SB220H	158
2SB220J	158
2SB220K	158
2SB220L	158
2SB220M	158
2SB220OR	158
2SB220R	158
2SB220X	158
2SB220Y	158
2SB221	102
2SB221A	102
2SB221B	158
2SB221C	158
2SB221D	158
2SB221E	158
2SB221F	158
2SB221G	158
2SB221GN	158
2SB221H	158
2SB221J	158
2SB221K	158
2SB221L	158
2SB221M	158
2SB221OR	158
2SB221R	158
2SB221X	158
2SB221Y	158
2SB222	102
2SB222A	158
2SB222B	158
2SB222C	158
2SB222D	158
2SB222E	158
2SB222F	158
2SB222G	158
2SB222GN	158
2SB222H	158
2SB222J	158
2SB222K	158
2SB222L	158
2SB222M	158
2SB222OR	158
2SB222R	158
2SB222X	158
2SB222Y	158
2SB223	102
2SB223A	158
2SB223B	158
2SB223C	158
2SB223D	158
2SB223E	158
2SB223F	158
2SB223G	158
2SB223Y	158
2SB224	102
2SB224A	158
2SB224B	158
2SB224C	158
2SB224D	158
2SB224E	158
2SB224F	158
2SB224G	158
2SB224GN	158
2SB224H	158
2SB224K	158
2SB224L	158
2SB224M	158
2SB224OR	158
2SB224R	158
2SB224X	158
2SB224Y	158
2SB225	102
2SB225A	158
2SB225B	158
2SB225C	158
2SB225D	158
2SB225E	158
2SB225F	158
2SB225G	158
2SB225GN	158
2SB225H	158
2SB225K	158
2SB225L	158
2SB225M	158
2SB225OR	158
2SB225R	158
2SB225X	158
2SB225Y	158
2SB226	102
2SB226A	158
2SB226B	158
2SB226C	158
2SB226D	158
2SB226E	158
2SB226F	158
2SB226G	158
2SB226GN	158
2SB226J	158
2SB226K	158
2SB226L	158
2SB226M	158
2SB226OR	158
2SB226R	158
2SB226X	158
2SB226Y	158
2SB227	102
2SB227A	158
2SB227B	158
2SB227C	158
2SB227D	158
2SB227E	158
2SB227F	158
2SB227G	158
2SB227GN	158
2SB227H	158
2SB227J	158
2SB227K	158
2SB227L	158
2SB227M	158
2SB227OR	158
2SB227R	158
2SB227X	158
2SB227Y	158
2SB228	104
2SB228A	127
2SB228B	127
2SB228C	127
2SB228D	127
2SB228E	127
2SB228F	127
2SB228G	127
2SB228GN	127
2SB228H	127
2SB228J	127
2SB228K	127
2SB228L	127
2SB228M	127
2SB228OR	127
2SB228R	127
2SB228X	127
2SB228Y	127
2SB229	121
2SB229A	127
2SB229B	127
2SB229C	127
2SB229D	127
2SB229E	127
2SB229F	127
2SB229G	127
2SB229GN	127
2SB229J	127
2SB229K	127
2SB229L	127
2SB229M	127
2SB229OR	127
2SB229R	127
2SB229X	127
2SB229Y	127
2SB230	104
2SB230A	127
2SB230B	127
2SB230C	127
2SB230D	127
2SB230E	127
2SB230F	127
2SB230G	127
2SB230GN	127
2SB230H	127
2SB230J	127
2SB230K	127
2SB230L	127
2SB230M	127
2SB230OR	127
2SB230R	127
2SB230X	127
2SB230Y	127
2SB231	127
2SB231A	127
2SB231B	127
2SB231C	127
2SB231D	127
2SB231E	127
2SB231F	127
2SB231G	127
2SB231GN	127
2SB231H	127
2SB231J	127
2SB231K	127
2SB231L	127
2SB231M	127
2SB231OR	127
2SB231R	127
2SB231X	127
2SB231Y	127
2SB232	127
2SB232A	127
2SB232B	127
2SB232C	127
2SB232D	127
2SB232E	127
2SB232F	127
2SB232G	127
2SB232GN	127
2SB232H	127
2SB232K	127
2SB232L	127
2SB232M	127
2SB232OR	127
2SB232R	127
2SB232X	127
2SB232Y	127
2SB233	104
2SB233A	127
2SB233B	127

PART NUMBER	NTE REPLACEMENT
2SB233C	127
2SB233D	127
2SB233E	127
2SB233F	127
2SB233G	127
2SB233GN	127
2SB233H	127
2SB233J	127
2SB233K	127
2SB233L	127
2SB233M	127
2SB233OR	127
2SB233R	127
2SB233X	127
2SB233Y	127
2SB234	127
2SB234A	127
2SB234B	127
2SB234C	127
2SB234D	127
2SB234E	127
2SB234F	127
2SB234G	127
2SB234GN	127
2SB234H	127
2SB234J	127
2SB234K	127
2SB234L	127
2SB234M	127
2SB234N	127
2SB234OR	127
2SB234R	127
2SB234X	127
2SB234Y	127
2SB235	105
2SB235A	105
2SB235B	105
2SB235C	105
2SB235D	105
2SB235E	105
2SB235F	105
2SB235G	105
2SB235GN	105
2SB235H	105
2SB235L	105
2SB235M	105
2SB235OR	105
2SB235R	105
2SB235X	105
2SB235Y	105
2SB236	105
2SB236A	105
2SB236B	105
2SB236C	105
2SB236D	105
2SB236E	105
2SB236F	105
2SB236G	105
2SB236GN	105
2SB236H	105
2SB236J	105
2SB236K	105
2SB236L	105
2SB236M	105
2SB236OR	105
2SB236R	105
2SB236X	105
2SB236Y	105
2SB237	105
2SB237-12A	105
2SB237-12B	105
2SB237A	105
2SB237B	105
2SB237C	105
2SB237D	105
2SB237E	105
2SB237F	105
2SB237G	105
2SB237GN	105
2SB237H	105
2SB237J	105
2SB237K	105
2SB237L	105
2SB237M	105
2SB237OR	105
2SB237R	105
2SB237X	105
2SB237Y	105
2SB238	158
2SB238-12A	158
2SB238-12B	158
2SB238-12C	158
2SB238A	105
2SB238B	105
2SB238C	105
2SB238D	105
2SB238E	105
2SB238F	105
2SB238G	105
2SB238GN	105
2SB238H	105
2SB238J	105
2SB238K	105
2SB238L	105
2SB238M	105
2SB238OR	105
2SB238R	105
2SB238X	105
2SB238Y	105
2SB239	121
2SB239A	121
2SB239B	127
2SB239C	127
2SB239D	127
2SB239E	127
2SB239F	127
2SB239G	127
2SB239GN	127
2SB239H	127
2SB239J	127
2SB239K	127
2SB239L	127
2SB239M	127
2SB239OR	127
2SB239R	127
2SB239X	127
2SB239Y	127
2SB240C	127
2SB240D	127
2SB240E	127
2SB240F	127
2SB240GN	127
2SB240H	127
2SB240J	127
2SB240K	127
2SB240L	127
2SB240M	127
2SB240OR	127
2SB240R	127
2SB240X	127
2SB241	102
2SB241A	158
2SB241B	158
2SB241C	158
2SB241D	158
2SB241E	158
2SB241F	158
2SB241G	158
2SB241GN	158
2SB241H	158
2SB241J	158
2SB241K	158
2SB241L	158
2SB241M	158
2SB241OR	158
2SB241R	158
2SB241V	158
2SB241X	158
2SB241Y	158
2SB242	158
2SB242A	158
2SB242B	158
2SB242C	158
2SB242D	158
2SB242E	158
2SB242F	158
2SB242G	158
2SB242GN	158
2SB242H	158
2SB242J	158
2SB242K	158
2SB242L	158
2SB242M	158
2SB242OR	158
2SB242R	158
2SB242X	158
2SB242Y	158
2SB243	127
2SB243A	127
2SB243B	127
2SB243C	127
2SB243D	127
2SB243E	127
2SB243F	127
2SB243G	127
2SB243GN	127
2SB243H	127
2SB243J	127
2SB243K	127
2SB243L	127
2SB243M	127
2SB243OR	127
2SB243R	127
2SB243X	127
2SB243Y	127
2SB244	127
2SB244A	127
2SB244B	127
2SB244C	127
2SB244D	127
2SB244E	127
2SB244F	127
2SB244G	127
2SB244GN	127
2SB244H	127
2SB244J	127
2SB244K	127
2SB244L	127
2SB244M	127
2SB244OR	127
2SB244R	127
2SB244X	127
2SB244Y	127
2SB245	127
2SB245A	127
2SB245B	127
2SB245C	127
2SB245D	127
2SB245E	127
2SB245F	127
2SB245G	127
2SB245H	127
2SB245J	127
2SB245L	127
2SB245M	127
2SB245OR	127
2SB245R	127
2SB245X	127
2SB245Y	127
2SB246	104
2SB246A	127
2SB246B	127
2SB246C	127
2SB246D	127
2SB246E	127
2SB246F	127
2SB246G	127
2SB246GN	127
2SB246H	127
2SB246J	127
2SB246K	127
2SB246L	127
2SB246M	127
2SB246OR	127
2SB246R	127
2SB246X	127
2SB246Y	127
2SB247	121
2SB247A	127
2SB247B	127
2SB247C	127
2SB247D	127
2SB247E	127
2SB247F	127
2SB247G	127
2SB247GN	127
2SB247H	127
2SB247J	127
2SB247K	127
2SB247L	127
2SB247M	127
2SB247OR	127
2SB247R	127
2SB247X	127
2SB247Y	127
2SB248	121
2SB248A	121
2SB248B	127
2SB248C	127
2SB248D	127
2SB248E	127
2SB248F	127
2SB248G	127
2SB248GN	127
2SB248H	127
2SB248J	127
2SB248K	127
2SB248L	127
2SB248M	127
2SB248OR	127
2SB248R	127
2SB248X	127
2SB248Y	127
2SB249	104
2SB249A	104
2SB249B	127
2SB249C	127
2SB249D	127
2SB249E	127
2SB249F	127
2SB249G	127
2SB249GN	127
2SB249H	127
2SB249J	127
2SB249K	127
2SB249L	127
2SB249M	127
2SB249OR	127
2SB249X	127
2SB249Y	127
2SB250	104
2SB250A	104
2SB250B	127
2SB250D	127
2SB250E	127
2SB250F	127
2SB250G	127
2SB250GN	127
2SB250H	127
2SB250K	127
2SB250L	127
2SB250M	127
2SB250OR	127
2SB250X	127
2SB250Y	127
2SB251	127
2SB251A	127
2SB251B	127
2SB251C	127
2SB251D	127
2SB251E	127
2SB251F	127
2SB251G	127
2SB251GN	127
2SB251H	127
2SB251J	127
2SB251K	127
2SB251L	127
2SB251M	127
2SB251OR	127
2SB251R	127
2SB251X	127
2SB252	127
2SB252A	127
2SB252B	127
2SB252C	127
2SB252D	127
2SB252E	127
2SB252F	127
2SB252G	127
2SB252GN	127
2SB252H	127
2SB252J	127
2SB252L	127
2SB252M	127
2SB252OR	127
2SB252R	127
2SB252X	127
2SB252Y	127
2SB253	127
2SB253A	127
2SB253B	127
2SB253C	127
2SB253D	127
2SB253E	127
2SB253F	127
2SB253G	127
2SB253GN	127
2SB253H	127
2SB253K	127
2SB253L	127
2SB253M	127
2SB253OR	127
2SB253X	127
2SB253Y	127
2SB254	104
2SB254(D)	127
2SB254A	127
2SB254B	127
2SB254C	127
2SB254D	127
2SB254E	127
2SB254F	127
2SB254G	127
2SB254GN	127
2SB254H	127
2SB254J	127
2SB254K	127
2SB254L	127
2SB254M	127
2SB254OR	127
2SB254R	127
2SB254X	127
2SB254Y	127
2SB255	104
2SB255A	127
2SB255B	127
2SB255C	127
2SB255D	127
2SB255E	127
2SB255F	127
2SB255G	127
2SB255GN	127
2SB255H	127
2SB255J	127
2SB255K	127
2SB255L	127
2SB255M	127
2SB255OR	127
2SB255R	127
2SB255X	127
2SB255Y	127
2SB256	104
2SB256A	131
2SB256B	131
2SB256C	131
2SB256D	131
2SB256E	131
2SB256F	131
2SB256G	131
2SB256GN	131
2SB256H	131
2SB256J	131
2SB256L	131
2SB256M	131
2SB256OR	131
2SB256R	131
2SB256X	131
2SB256Y	131
2SB257	102
2SB257A	158
2SB257B	158
2SB257C	158
2SB257D	158
2SB257E	158
2SB257F	158
2SB257G	158
2SB257GN	158
2SB257H	158
2SB257K	158
2SB257L	158
2SB257M	158
2SB257OR	158
2SB257R	158
2SB257X	158
2SB257Y	158
2SB258	105
2SB258A	158
2SB258B	158
2SB258C	158
2SB258D	158
2SB258E	158
2SB258F	158
2SB258G	158
2SB258GN	158
2SB258H	158
2SB258J	158
2SB258K	158
2SB258L	158
2SB258M	158
2SB258OR	158
2SB258R	158
2SB258X	158
2SB258Y	158
2SB259	105
2SB259A	105
2SB259B	105
2SB259C	105
2SB259D	105
2SB259E	105
2SB259F	105
2SB259GN	105
2SB259H	105
2SB259J	105
2SB259K	105
2SB259L	105
2SB259OR	105
2SB259R	105
2SB259X	105
2SB259Y	105
2SB260	105
2SB260A	105
2SB260B	105
2SB260C	105
2SB260D	105
2SB260E	105
2SB260F	105
2SB260G	105
2SB260GN	105
2SB260H	105
2SB260J	105
2SB260K	105
2SB260L	105
2SB260M	105
2SB260OR	105
2SB260R	105
2SB260X	105
2SB260Y	105
2SB261	102A
2SB261A	158
2SB261B	158
2SB261C	158
2SB261D	158
2SB261E	158
2SB261F	158
2SB261G	158
2SB261GN	158
2SB261H	158
2SB261J	158
2SB261K	158
2SB261L	158
2SB261M	158
2SB261OR	158
2SB261R	158
2SB261X	158
2SB261Y	158
2SB262	102A
2SB262A	158
2SB262B	158
2SB262C	158
2SB262D	158
2SB262E	158
2SB262F	158
2SB262G	158
2SB262GN	158
2SB262H	158
2SB262J	158
2SB262K	158
2SB262L	158
2SB262M	158
2SB262OR	158
2SB262R	158
2SB262X	158
2SB262Y	158
2SB263	102A
2SB263A	158
2SB263B	158
2SB263C	158
2SB263D	158
2SB263E	158
2SB263F	158
2SB263G	158
2SB263GN	158
2SB263H	158
2SB263J	158
2SB263K	158
2SB263L	158
2SB263M	158
2SB263OR	158
2SB263R	158
2SB263X	158
2SB263Y	158
2SB264	102A
2SB264A	158
2SB264B	158
2SB264C	158
2SB264D	158
2SB264E	158
2SB264F	158
2SB264G	158
2SB264GN	158
2SB264H	158
2SB264J	158
2SB264K	158
2SB264L	158
2SB264M	158
2SB264OR	158
2SB264R	158
2SB264X	158
2SB264Y	158
2SB265	102A
2SB265A	158
2SB265B	158
2SB265C	158
2SB265D	158
2SB265E	158
2SB265F	158
2SB265G	158
2SB265GN	158
2SB265H	158
2SB265J	158
2SB265K	158
2SB265L	158
2SB265M	158
2SB265OR	158
2SB265X	158
2SB265Y	158
2SB266	102A
2SB266A	158
2SB266B	158
2SB266C	158
2SB266D	158
2SB266E	158
2SB266F	158
2SB266G	158
2SB266GN	158
2SB266H	158
2SB266J	158
2SB266K	158
2SB266L	158
2SB266M	158
2SB266OR	158
2SB266P	102A
2SB266Q	102A
2SB266R	158
2SB266X	158
2SB266Y	158
2SB267	102A
2SB267A	158
2SB267B	158
2SB267C	158
2SB267D	158
2SB267E	158
2SB267F	158
2SB267G	158
2SB267GN	158
2SB267H	158
2SB267J	158
2SB267K	158
2SB267L	158
2SB267M	158
2SB267OR	158
2SB267R	158
2SB267X	158
2SB267Y	158
2SB268	102A
2SB268A	158
2SB268B	158
2SB268C	158
2SB268D	158
2SB268E	158
2SB268F	158
2SB268G	158
2SB268GN	158
2SB268H	158
2SB268J	158
2SB268K	158
2SB268L	158
2SB268M	158
2SB268OR	158
2SB268R	158
2SB268X	158
2SB268Y	158
2SB269	102A
2SB269A	158
2SB269C	158
2SB269D	158
2SB269E	158
2SB269F	158
2SB269G	158
2SB269GN	158
2SB269J	158
2SB269K	158
2SB269L	158
2SB269M	158
2SB269OR	158
2SB269R	158
2SB269X	158
2SB269Y	158
2SB270	102A
2SB270A	102A
2SB270B	102A
2SB270C	102A
2SB270D	102A
2SB270E	102A
2SB270F	127
2SB270G	127
2SB270GN	127
2SB270H	127
2SB270J	127
2SB270K	127
2SB270L	127
2SB270M	127
2SB270OR	127
2SB270R	127
2SB270X	127
2SB270Y	127
2SB271	102A
2SB272	102A
2SB272A	158
2SB272B	158
2SB272C	158
2SB272D	158
2SB272E	158
2SB272F	158
2SB272G	158
2SB272GN	158
2SB272J	158
2SB272K	158
2SB272L	158
2SB272M	158
2SB272OR	158
2SB272R	158
2SB272X	158
2SB272Y	158
2SB273	102A
2SB273A	158
2SB273B	158
2SB273C	158
2SB273D	158
2SB273E	158
2SB273F	158
2SB273G	158
2SB273GN	158
2SB273H	158
2SB273J	158
2SB273K	158
2SB273L	158
2SB273M	158
2SB273OR	158
2SB273R	158
2SB273X	158
2SB273Y	158
2SB274	127
2SB274A	158
2SB274B	158
2SB274C	158
2SB274D	158
2SB274E	158
2SB274F	158
2SB274G	158
2SB274H	158
2SB274J	158
2SB274K	158
2SB274L	158
2SB274M	158
2SB274OR	158
2SB274R	158
2SB274V	158
2SB274X	158
2SB274Y	158
2SB275	127
2SB275A	127
2SB275B	127
2SB275C	127
2SB275D	127
2SB275E	127
2SB275F	127
2SB275G	127
2SB275GN	127
2SB275H	127
2SB275J	127
2SB275K	127
2SB275L	127
2SB275M	127
2SB275OR	127
2SB275R	127
2SB275X	127
2SB275Y	127
2SB276	127
2SB276A	127
2SB276B	127
2SB276C	127
2SB276D	127
2SB276E	127
2SB276F	127
2SB276G	127
2SB276GN	127
2SB276H	127
2SB276J	127
2SB276K	127
2SB276L	127
2SB276M	127
2SB276OR	127
2SB276R	127
2SB276X	127
2SB276Y	127
2SB277	160
2SB278	158
2SB279	158
2SB280	102A
2SB281	106
2SB281C	294
2SB282	121
2SB282A	127
2SB282B	127
2SB282C	127
2SB282D	127
2SB282E	127
2SB282G	127
2SB282GN	127
2SB282H	127
2SB282J	127
2SB282K	127
2SB282L	127
2SB282M	127
2SB282OR	127
2SB282R	127
2SB282X	127
2SB282Y	127
2SB283	121
2SB283A	127
2SB283B	127
2SB283C	127
2SB283D	127
2SB283E	127
2SB283F	127
2SB283G	127
2SB283GN	127
2SB283H	127
2SB283J	127
2SB283K	127
2SB283L	127
2SB283M	127
2SB283OR	127
2SB283R	127
2SB283X	127
2SB283Y	127

PART NUMBER	NTE REPLACEMENT
2SB284	121
2SB284A	127
2SB284B	127
2SB284C	127
2SB284D	127
2SB284E	127
2SB284F	127
2SB284G	127
2SB284H	127
2SB284J	127
2SB284K	127
2SB284L	127
2SB284M	127
2SB2840R	127
2SB284R	127
2SB284X	127
2SB284Y	127
2SB285	121
2SB285A	127
2SB285B	127
2SB285C	127
2SB285D	127
2SB285E	127
2SB285F	127
2SB285G	127
2SB285GN	127
2SB285H	127
2SB285J	127
2SB285K	127
2SB285L	127
2SB285M	127
2SB285OR	127
2SB285R	127
2SB285X	127
2SB285Y	127
2SB286	127
2SB287	127
2SB288	160
2SB289	160
2SB290	100
2SB290A	158
2SB290B	158
2SB290C	158
2SB290D	158
2SB290E	158
2SB290F	158
2SB290G	158
2SB290GN	158
2SB290H	158
2SB290J	158
2SB290K	158
2SB290L	158
2SB290M	158
2SB290OR	158
2SB290R	158
2SB290X	158
2SB290Y	158
2SB291	100
2SB291-GREEN	158
2SB291-RED	158
2SB291-YELLOW	158
2SB291A	158
2SB291B	158
2SB291C	158
2SB291D	158
2SB291E	158
2SB291F	158
2SB291G	158
2SB291GN	158
2SB291H	158
2SB291J	158
2SB291K	158
2SB291L	158
2SB291M	158
2SB291OR	158
2SB291R	158
2SB291X	158
2SB291Y	158
2SB292	100
2SB292-BLUE	158
2SB292-GREEN	158
2SB292-ORANGE	158
2SB292-RED	158
2SB292-YELLOW	158
2SB292A	100
2SB292B	158
2SB292C	158
2SB292D	158
2SB292E	158
2SB292F	158
2SB292G	158
2SB292GN	158
2SB292H	158
2SB292J	158
2SB292K	158
2SB292L	158
2SB292M	158
2SB292OR	158
2SB292R	158
2SB292X	158
2SB292Y	158
2SB293	102A
2SB293A	158
2SB293B	158
2SB293C	158
2SB293D	158
2SB293E	158
2SB293F	158
2SB293G	158
2SB293GN	158
2SB293H	158
2SB293J	158
2SB293K	158
2SB293L	158
2SB293M	158
2SB293OR	158
2SB293R	158
2SB293X	158
2SB293Y	158
2SB294	102A
2SB294A	158
2SB294B	158
2SB294C	158
2SB294D	158
2SB294E	158
2SB294F	158
2SB294G	158
2SB294GN	158
2SB294H	158
2SB294J	158
2SB294K	158
2SB294L	158
2SB294M	158
2SB294OR	158
2SB294R	158
2SB294X	158
2SB294Y	158
2SB295	121
2SB295A	127
2SB295B	127
2SB295C	127
2SB295D	127
2SB295E	127
2SB295F	127
2SB295G	127
2SB295GN	127
2SB295H	127
2SB295J	127
2SB295K	127
2SB295L	127
2SB295M	127
2SB295OR	127
2SB295R	127
2SB295X	127
2SB295Y	127
2SB296	127
2SB296A	127
2SB296B	127
2SB296C	127
2SB296D	127
2SB296E	127
2SB296F	127
2SB296G	127
2SB296GN	127
2SB296H	127
2SB296J	127
2SB296K	127
2SB296L	127
2SB296M	127
2SB296OR	127
2SB296R	127
2SB296X	127
2SB296Y	127
2SB299	102A
2SB299A	158
2SB299B	158
2SB299C	158
2SB299D	158
2SB299E	158
2SB299F	158
2SB299G	158
2SB299GN	158
2SB299H	158
2SB299J	158
2SB299K	158
2SB299L	158
2SB299M	158
2SB299OR	158
2SB299R	158
2SB299X	158
2SB299Y	158
2SB300	127
2SB300A	127
2SB300B	127
2SB300C	127
2SB300D	127
2SB300E	127
2SB300F	127
2SB300G	127
2SB300GN	127
2SB300H	127
2SB300J	127
2SB300K	127
2SB300L	127
2SB300M	127
2SB300R	127
2SB300X	127
2SB300Y	127
2SB301	127
2SB301A	127
2SB301B	127
2SB301C	127
2SB301D	127
2SB301E	127
2SB301F	127
2SB301G	127
2SB301GN	127
2SB301H	127
2SB301J	127
2SB301L	127
2SB301M	127
2SB3010R	127
2SB301R	127
2SB301X	127
2SB301Y	127
2SB302	102A
2SB302A	160
2SB302B	160
2SB302C	160
2SB302D	160
2SB302E	160
2SB302F	160
2SB302G	160
2SB302J	160
2SB302K	160
2SB302L	160
2SB302M	160
2SB3020R	160
2SB302R	160
2SB302X	160
2SB302Y	160
2SB303	102A
2SB303(0)	158
2SB303-0	102A
2SB303A	102A
2SB303B	102A
2SB303BK	158
2SB303C	102A
2SB303D	158
2SB303E	158
2SB303F	158
2SB303G	158
2SB303GN	158
2SB303H	102A
2SB303J	158
2SB303K	102A
2SB303L	158
2SB303M	158
2SB303OR	158
2SB303R	158
2SB303X	158
2SB303Y	158
2SB304	158
2SB304A	158
2SB304B	176
2SB304C	176
2SB304D	176
2SB304E	176
2SB304F	176
2SB304G	176
2SB304GN	176
2SB304H	176
2SB304J	176
2SB304K	176
2SB304L	176
2SB304M	176
2SB304OR	176
2SB304R	176
2SB304X	176
2SB304Y	176
2SB309	127
2SB309A	127
2SB309B	127
2SB309C	127
2SB309D	127
2SB309E	127
2SB309F	127
2SB309G	127
2SB309GN	127
2SB309H	127
2SB309K	127
2SB309L	127
2SB309M	127
2SB3090R	127
2SB309R	127
2SB309X	127
2SB309Y	127
2SB310	127
2SB310A	127
2SB310B	127
2SB310C	127
2SB310D	127
2SB310E	127
2SB310F	127
2SB310G	127
2SB310GN	127
2SB310H	127
2SB310J	127
2SB310K	127
2SB310L	127
2SB310M	127
2SB310OR	127
2SB310R	127
2SB310X	127
2SB310Y	127
2SB311	127
2SB311A	127
2SB311B	127
2SB311C	127
2SB311D	127
2SB311E	127
2SB311F	127
2SB311G	127
2SB311GN	127
2SB311H	127
2SB311J	127
2SB311K	127
2SB311L	127
2SB311M	127
2SB311OR	127
2SB311R	127
2SB311X	127
2SB311Y	127
2SB312	127
2SB312A	127
2SB312B	127
2SB312C	127
2SB312D	127
2SB312E	127
2SB312F	127
2SB312G	127
2SB312GN	127
2SB312H	127
2SB312J	127
2SB312K	127
2SB312L	127
2SB312M	127
2SB312X	127
2SB312Y	127
2SB313	127
2SB313A	127
2SB313B	127
2SB313C	127
2SB313D	127
2SB313E	127
2SB313F	127
2SB313G	127
2SB313GN	127
2SB313H	127
2SB313J	127
2SB313K	127
2SB313L	127
2SB313M	127
2SB313OR	127
2SB313R	127
2SB313X	127
2SB313Y	127
2SB314	100
2SB314A	158
2SB314B	158
2SB314C	158
2SB314D	158
2SB314E	158
2SB314F	158
2SB314GN	158
2SB314H	158
2SB314J	158
2SB314K	158
2SB314L	158
2SB314M	158
2SB314OR	158
2SB314R	158
2SB314X	158
2SB314Y	158
2SB315	102A
2SB315A	158
2SB315B	158
2SB315C	158
2SB315D	158
2SB315E	158
2SB315F	158
2SB315G	158
2SB315GN	158
2SB315H	158
2SB315J	158
2SB315L	158
2SB315M	158
2SB315OR	158
2SB315R	158
2SB315X	158
2SB315Y	158
2SB316	102A
2SB316A	158
2SB316B	158
2SB316C	158
2SB316D	158
2SB316E	158
2SB316F	158
2SB316G	158
2SB316GN	158
2SB316H	158
2SB316OR	158
2SB316R	158
2SB316X	158
2SB316Y	158
2SB317	102A
2SB318	127
2SB318A	127
2SB318B	127
2SB318C	127
2SB318D	127
2SB318E	127
2SB318F	127
2SB318G	127
2SB318GN	127
2SB318H	127
2SB318J	127
2SB318K	127
2SB318L	127
2SB318M	127
2SB318OR	127
2SB318R	127
2SB318X	127
2SB318Y	127
2SB319	127
2SB319A	127
2SB319B	127
2SB319C	127
2SB319D	127
2SB319E	127
2SB319F	127
2SB319G	127
2SB319GN	127
2SB319H	127
2SB319J	127
2SB319K	127
2SB319L	127
2SB319M	127
2SB319OR	127
2SB319R	127
2SB319X	127
2SB319Y	127
2SB320	127
2SB320A	127
2SB320B	127
2SB320C	127
2SB320D	127
2SB320E	127
2SB320F	127
2SB320G	127
2SB320GN	127
2SB320H	127
2SB320J	127
2SB320K	127
2SB320L	127
2SB320M	127
2SB320OR	127
2SB320R	127
2SB320X	127
2SB320Y	127
2SB321	102A
2SB322	102A
2SB323	102A
2SB324	102A
2SB324(E)	102A
2SB324(F)	102A
2SB324(I)	102A
2SB324(L)	102A
2SB324(N)	102A
2SB324-OR	102A
2SB324/4454C	102A
2SB324,K	102A
2SB324A	102A
2SB324B	102A
2SB324C	102A
2SB324D	102A
2SB324E	102A
2SB324E-1	102A
2SB324E-L	102A
2SB324F	102A
2SB324G	102A
2SB324GN	102A
2SB324H	102A
2SB324I	102A
2SB324J	102A
2SB324K	102A
2SB324L	102A
2SB324M	102A
2SB324N	102A
2SB324OR	102A
2SB324P	102A
2SB324R	102A
2SB324S	102A
2SB324V	102A
2SB324X	102A
2SB324Y	102A
2SB326	102
2SB326A	158
2SB326B	158
2SB326C	158
2SB326D	158
2SB326E	158
2SB326F	158
2SB326G	158
2SB326GN	158
2SB326H	158
2SB326J	158
2SB326K	158
2SB326L	158
2SB326M	158
2SB326OR	158
2SB326R	158
2SB326X	158
2SB326Y	158
2SB327	102
2SB327A	158
2SB327B	158
2SB327C	158
2SB327D	158
2SB327E	158
2SB327F	158
2SB327G	158
2SB327GN	158
2SB327H	158
2SB327J	158
2SB327K	158
2SB327L	158
2SB327M	158
2SB327OR	158
2SB327R	158
2SB327X	158
2SB327Y	158
2SB328	102
2SB328A	158
2SB328B	158
2SB328C	158
2SB328D	158
2SB328E	158
2SB328F	158
2SB328G	158
2SB328GN	158
2SB328H	158
2SB328J	158
2SB328K	158
2SB328L	158
2SB328M	158
2SB328OR	158
2SB328R	158
2SB328X	158
2SB328Y	158
2SB329	102A
2SB329A	158
2SB329B	158
2SB329C	158
2SB329D	158
2SB329E	158
2SB329F	158
2SB329G	158
2SB329GN	158
2SB329H	158
2SB329J	158
2SB329K	102A
2SB329L	158
2SB329M	158
2SB329OR	158
2SB329R	158
2SB329X	158
2SB329Y	158
2SB331	213
2SB331A	105
2SB331B	105
2SB331C	105
2SB331D	105
2SB331E	105
2SB331F	105
2SB331G	105
2SB331GN	105
2SB331H	213
2SB331HA	213
2SB331HB	213
2SB331HC	213
2SB331J	105
2SB331K	105
2SB331L	105
2SB331M	105
2SB331OR	105
2SB331R	105
2SB331X	105
2SB331Y	105
2SB332	213
2SB332A	105
2SB332B	105
2SB332C	105
2SB332D	105
2SB332E	105
2SB332F	105
2SB332G	105
2SB332GN	105
2SB332H	213
2SB332HA	213
2SB332HB	213
2SB332HC	213
2SB332J	105
2SB332K	105
2SB332L	105
2SB332M	105
2SB332OR	105
2SB332R	105
2SB332X	105
2SB332Y	105
2SB333	213
2SB333A	105
2SB333B	105
2SB333D	105
2SB333E	105
2SB333F	105
2SB333G	105
2SB333GN	105
2SB333H	105
2SB333HA	105
2SB333HB	105
2SB333J	105
2SB333K	105
2SB333L	105
2SB333M	105
2SB333OR	105
2SB333R	105
2SB333X	105
2SB333Y	105
2SB334	105
2SB334-OR	105
2SB334A	105
2SB334B	105
2SB334C	105
2SB334D	105
2SB334E	105
2SB334F	105
2SB334G	105
2SB334GN	105
2SB334H	105
2SB334J	105
2SB334K	105
2SB334L	105
2SB334M	105
2SB334R	105
2SB334X	105
2SB334Y	105
2SB335	102
2SB336	102A
2SB337	104
2SB337(A)	127
2SB337-B	127
2SB337-OR	121
2SB337A	121
2SB337B	121
2SB337BK	121
2SB337C	121
2SB337D	121
2SB337E	121
2SB337F	121
2SB337G	121
2SB337GN	121
2SB337H	121
2SB337HA	121
2SB337HB	121
2SB337J	121
2SB337K	127
2SB337L	127
2SB337LB	121
2SB337M	121
2SB337OR	127
2SB337R	121
2SB337X	121
2SB337Y	121
2SB338	121
2SB338A	127
2SB338B	127
2SB338C	127
2SB338D	127
2SB338E	127
2SB338F	127
2SB338G	127
2SB338GN	127
2SB338H	121
2SB338HA	121
2SB338HB	121
2SB338J	127
2SB338K	127
2SB338L	127
2SB338M	127
2SB338OR	127
2SB338R	127
2SB338X	127
2SB338Y	127
2SB339	179
2SB339H	179
2SB340	179
2SB340H	179
2SB341	127
2SB341A	127
2SB341B	127
2SB341C	127
2SB341D	127
2SB341E	127
2SB341F	127
2SB341G	127
2SB341GN	127
2SB341H	127
2SB341J	127
2SB341K	127
2SB341L	127
2SB341M	127
2SB341OR	127
2SB341R	127
2SB341S	127
2SB341V	127
2SB341V(S)	127
2SB341X	127
2SB341Y	127
2SB342	127
2SB342A	127
2SB342B	127
2SB342C	127
2SB342D	127
2SB342E	127
2SB342F	127
2SB342G	127
2SB342GN	127
2SB342H	127
2SB342J	127
2SB342K	127
2SB342L	127
2SB342M	127
2SB342OR	127
2SB342R	127
2SB342X	127
2SB342Y	127
2SB343	127
2SB343A	127
2SB343B	127
2SB343C	127
2SB343D	127
2SB343E	127
2SB343F	127
2SB343G	127
2SB343GN	127
2SB343H	127
2SB343J	127
2SB343K	127
2SB343L	127
2SB343M	127
2SB343OR	127
2SB343R	127
2SB343X	127
2SB343Y	127
2SB345	102A
2SB345A	158
2SB345B	158
2SB345C	158
2SB345D	158
2SB345E	158
2SB345F	158
2SB345G	158
2SB345GN	158
2SB345H	158
2SB345J	158
2SB345K	158
2SB345L	158
2SB345M	158
2SB345OR	158
2SB345R	158
2SB345X	158
2SB345Y	158
2SB346	102A
2SB346(Q)	158
2SB346A	158
2SB346B	158
2SB346C	158
2SB346D	158
2SB346E	158
2SB346F	158
2SB346G	158
2SB346GN	158
2SB346H	158
2SB346J	158
2SB346K	102A
2SB346L	158
2SB346M	158

PART NUMBER	NTE REPLACEMENT
2SB346OR	158
2SB346Q	102A
2SB346R	158
2SB346X	158
2SB346Y	158
2SB347	102
2SB347A	158
2SB347B	158
2SB347C	158
2SB347D	158
2SB347E	158
2SB347F	158
2SB347G	158
2SB347GN	158
2SB347H	158
2SB347J	158
2SB347K	158
2SB347L	158
2SB347M	158
2SB347OR	158
2SB347R	158
2SB347X	158
2SB347Y	158
2SB348	102A
2SB348(Q)	158
2SB348A	158
2SB348B	158
2SB348C	158
2SB348D	158
2SB348E	158
2SB348F	158
2SB348G	158
2SB348GN	158
2SB348H	158
2SB348J	158
2SB348K	158
2SB348L	158
2SB348M	158
2SB348OR	158
2SB348Q	102A
2SB348R	102A
2SB348X	158
2SB348Y	158
2SB349	102A
2SB350	102
2SB350A	158
2SB350B	158
2SB350C	158
2SB350D	158
2SB350E	158
2SB350F	158
2SB350G	158
2SB350GN	158
2SB350H	158
2SB350J	158
2SB350K	158
2SB350L	158
2SB350M	158
2SB350OR	158
2SB350R	158
2SB350X	158
2SB350Y	158
2SB351	105
2SB351A	105
2SB351B	105
2SB351C	105
2SB351D	105
2SB351E	105
2SB351F	105
2SB351G	105
2SB351GN	105
2SB351H	105
2SB351J	105
2SB351K	105
2SB351L	105
2SB351M	105
2SB351OR	105
2SB351R	105
2SB351X	105
2SB351Y	105
2SB352	294
2SB352A	105
2SB352B	105
2SB352C	105
2SB352D	294
2SB352E	105
2SB352F	105
2SB352G	105
2SB352GN	105
2SB352H	105
2SB352J	105
2SB352K	105
2SB352L	105
2SB352M	105
2SB352OR	105
2SB352R	105
2SB352X	105
2SB352Y	105
2SB353	105
2SB353A	105
2SB353B	105
2SB353C	105
2SB353D	105
2SB353E	105
2SB353F	105
2SB353G	105
2SB353GN	105
2SB353H	105
2SB353J	105
2SB353K	105
2SB353L	105
2SB353M	105
2SB353OR	105
2SB353R	105
2SB353X	105
2SB353Y	105
2SB354	105
2SB354A	105
2SB354B	105
2SB354C	105
2SB354D	105
2SB354E	105
2SB354F	105
2SB354G	105
2SB354GN	105
2SB354H	105
2SB354J	105
2SB354K	105
2SB354L	105
2SB354M	105
2SB354OR	105
2SB354R	105
2SB354X	105
2SB354Y	105
2SB355	104
2SB355A	127
2SB355B	127
2SB355C	127
2SB355D	127
2SB355E	127
2SB355F	127
2SB355G	127
2SB355GN	127
2SB355H	127
2SB355J	127
2SB355K	127
2SB355L	127
2SB355M	127
2SB355OR	127
2SB355R	127
2SB355X	127
2SB355Y	127
2SB356	104
2SB356A	127
2SB356B	127
2SB356C	127
2SB356D	127
2SB356E	127
2SB356F	127
2SB356G	127
2SB356GN	127
2SB356H	127
2SB356J	127
2SB356K	127
2SB356L	127
2SB356M	127
2SB356OR	127
2SB356R	127
2SB356X	127
2SB356Y	127
2SB357	127
2SB357A	127
2SB357B	127
2SB357C	127
2SB357D	127
2SB357E	127
2SB357F	127
2SB357G	127
2SB357GN	127
2SB357H	127
2SB357J	127
2SB357K	127
2SB357L	127
2SB357M	127
2SB357OR	127
2SB357R	127
2SB357X	127
2SB357Y	127
2SB358	127
2SB358A	127
2SB358B	127
2SB358C	127
2SB358D	127
2SB358E	127
2SB358F	127
2SB358G	127
2SB358GN	127
2SB358H	127
2SB358J	127
2SB358K	127
2SB358L	127
2SB358M	127
2SB358OR	127
2SB358R	127
2SB358X	127
2SB358Y	127
2SB359	127
2SB359A	127
2SB359B	127
2SB359C	127
2SB359D	127
2SB359E	127
2SB359F	127
2SB359G	127
2SB359GN	127
2SB359H	127
2SB359J	127
2SB359K	127
2SB359L	127
2SB359M	127
2SB359OR	127
2SB359R	127
2SB359X	127
2SB359Y	127
2SB360	127
2SB360A	127
2SB360B	127
2SB360C	127
2SB360D	127
2SB360E	127
2SB360F	127
2SB360G	127
2SB360GN	127
2SB360H	127
2SB360J	127
2SB360K	127
2SB360L	127
2SB360M	127
2SB360OR	127
2SB360R	127
2SB360X	127
2SB360Y	127
2SB361	127
2SB361A	127
2SB361B	127
2SB361C	127
2SB361D	127
2SB361E	127
2SB361F	127
2SB361G	127
2SB361GN	127
2SB361H	127
2SB361J	127
2SB361K	127
2SB361L	127
2SB361M	127
2SB361OR	127
2SB361R	127
2SB361X	127
2SB361Y	127
2SB362	127
2SB362A	127
2SB362B	127
2SB362C	127
2SB362D	127
2SB362E	127
2SB362F	127
2SB362G	127
2SB362GN	127
2SB362H	127
2SB362J	127
2SB362K	127
2SB362L	127
2SB362M	127
2SB362OR	127
2SB362R	127
2SB362X	127
2SB362Y	127
2SB363	197
2SB364	102A
2SB364-OR	102A
2SB364/8023	102A
2SB364/80236400	102A
2SB364A	102A
2SB364B	102A
2SB364C	102A
2SB364D	102A
2SB364E	102A
2SB364F	102A
2SB364G	102A
2SB364GN	102A
2SB364H	102A
2SB364J	102A
2SB364K	102A
2SB364L	102A
2SB364M	102A
2SB364OR	102A
2SB364R	102A
2SB364X	102A
2SB364Y	102A
2SB365	158
2SB365A	158
2SB365B	158
2SB365C	158
2SB365D	158
2SB365E	158
2SB365F	158
2SB365G	158
2SB365GN	158
2SB365H	158
2SB365J	158
2SB365K	158
2SB365L	158
2SB365M	158
2SB365OR	158
2SB365R	158
2SB365X	158
2SB365Y	158
2SB366	102A
2SB366A	176
2SB366B	176
2SB366C	176
2SB366D	176
2SB366E	176
2SB366F	176
2SB366G	176
2SB366GN	176
2SB366H	176
2SB366J	176
2SB366K	176
2SB366L	176
2SB366M	176
2SB366OR	176
2SB366R	176
2SB366X	176
2SB366Y	176
2SB367	131
2SB367(A)	131
2SB367(B)P	131
2SB367-4	131
2SB367-5	131
2SB367-OR	131
2SB367A	131
2SB367AL	131
2SB367B	131
2SB367B-2	131
2SB367BL	131
2SB367BP	131
2SB367C	131
2SB367D	131
2SB367E	131
2SB367F	131
2SB367G	131
2SB367H	131
2SB367J	131
2SB367K	131
2SB367L	131
2SB367M	131
2SB367OR	131
2SB367P	131
2SB367R	131
2SB367X	131
2SB367Y	131
2SB368	131
2SB368(B)	131
2SB368-OR	131
2SB368A	131
2SB368B	131
2SB368C	131
2SB368D	131
2SB368E	131
2SB368F	131
2SB368G	131
2SB368GN	131
2SB368H	131
2SB368J	131
2SB368K	131
2SB368L	131
2SB368M	131
2SB368OR	131
2SB368X	131
2SB368Y	131
2SB370	102A
2SB370-0	158
2SB370/123	102A
2SB370/123877	102A
2SB370A	102A
2SB370AA	102A
2SB370AB	102A
2SB370AC	102A
2SB370AH	102A
2SB370AHA	102A
2SB370AHB	102A
2SB370B	102A
2SB370C	102A
2SB370D	102A
2SB370E	158
2SB370F	158
2SB370G	158
2SB370GN	158
2SB370H	158
2SB370J	158
2SB370K	158
2SB370L	158
2SB370M	158
2SB370OR	158
2SB370P	102A
2SB370PB	102A
2SB370R	158
2SB370V	102A
2SB370X	158
2SB370Y	158
2SB371	102A
2SB371A	158
2SB371B	158
2SB371C	158
2SB371D	102A
2SB371E	158
2SB371F	158
2SB371G	158
2SB371GN	158
2SB371H	158
2SB371J	158
2SB371K	158
2SB371L	158
2SB371M	158
2SB371OR	158
2SB371R	158
2SB371X	158
2SB371Y	158
2SB372	158
2SB373	158
2SB373A	127
2SB373B	127
2SB373C	127
2SB373D	127
2SB373E	127
2SB373F	127
2SB373G	127
2SB373GN	127
2SB373H	127
2SB373K	127
2SB373L	127
2SB373M	127
2SB373OR	127
2SB373R	127
2SB373X	127
2SB373Y	127
2SB375	127
2SB375-2B	127
2SB375-5B	127
2SB375-OR	127
2SB375A	127
2SB375A-2B	127
2SB375A-5B	127
2SB375A-NB	127
2SB375AL	127
2SB375B	127
2SB375C	127
2SB375D	127
2SB375E	127
2SB375F	127
2SB375G	127
2SB375GN	127
2SB375H	127
2SB375J	127
2SB375K	127
2SB375L	127
2SB375M	127
2SB375OR	127
2SB375R	127
2SB375TV	127
2SB375X	127
2SB375Y	127
2SB376	102A
2SB376A	158
2SB376B	158
2SB376C	158
2SB376D	158
2SB376E	158
2SB376F	158
2SB376G	102A
2SB376GN	158
2SB376J	158
2SB376K	158
2SB376L	158
2SB376M	158
2SB376OR	158
2SB376R	158
2SB376X	158
2SB376Y	158
2SB377	102A
2SB377B	102A
2SB378	102A
2SB378A	102
2SB378B	158
2SB378C	158
2SB378D	158
2SB378E	158
2SB378F	158
2SB378GN	158
2SB378J	158
2SB378K	158
2SB378L	158
2SB378M	158
2SB378OR	158
2SB378R	158
2SB378X	158
2SB378Y	158
2SB379	102
2SB379-2	102
2SB379A	102
2SB379B	102
2SB379C	158
2SB379D	158
2SB379E	158
2SB379F	158
2SB379G	158
2SB379GN	158
2SB379H	158
2SB379J	158
2SB379K	158
2SB379L	158
2SB379M	158
2SB379OR	158
2SB379R	158
2SB379Y	158
2SB380	102
2SB380A	102
2SB380B	158
2SB380C	158
2SB380D	158
2SB380E	158
2SB380F	158
2SB380GN	158
2SB380J	158
2SB380K	158
2SB380L	158
2SB380OR	158
2SB380R	158
2SB380X	158
2SB380Y	158
2SB381	102A
2SB381A	158
2SB381B	158
2SB381C	158
2SB381D	158
2SB381E	158
2SB381F	158
2SB381G	158
2SB381GN	158
2SB381H	158
2SB381J	158
2SB381K	158
2SB381L	158
2SB381M	158
2SB381OR	158
2SB381R	158
2SB381X	158
2SB381Y	158
2SB382	102A
2SB382A	158
2SB382B	158
2SB382BK	158
2SB382BN	158
2SB382C	158
2SB382D	158
2SB382E	158
2SB382F	158
2SB382G	158
2SB382GN	158
2SB382H	158
2SB382J	158
2SB382K	158
2SB382L	158
2SB382OR	158
2SB382R	158
2SB382X	158
2SB382Y	158
2SB383	102A
2SB383(2SB495)	102A
2SB383(2SB382)	102A
2SB383-1	102A
2SB383-2	102A
2SB383A	158
2SB383B	158
2SB383C	158
2SB383D	158
2SB383E	158
2SB383F	158
2SB383G	158
2SB383GN	158
2SB383H	158
2SB383J	158
2SB383K	158
2SB383L	158
2SB383M	158
2SB383OR	158
2SB383R	158
2SB383X	158
2SB383Y	158
2SB384	126
2SB384A	158
2SB384B	158
2SB384C	158
2SB384D	158
2SB384E	158
2SB384F	158
2SB384G	158
2SB384GN	158
2SB384H	158
2SB384J	158
2SB384K	158
2SB384L	158
2SB384M	158
2SB384OR	158
2SB384R	158
2SB384X	158
2SB384Y	158
2SB385	126
2SB385A	158
2SB385B	158
2SB385C	158
2SB385D	158
2SB385E	158
2SB385F	158
2SB385G	158
2SB385GN	158
2SB385H	158
2SB385J	158
2SB385K	158
2SB385L	158
2SB385M	158
2SB385OR	158
2SB385R	158
2SB385X	158
2SB385Y	158
2SB386	102A
2SB386A	176
2SB386B	176
2SB386C	176
2SB386D	176
2SB386E	176
2SB386F	176
2SB386G	176
2SB386GN	176
2SB386H	176
2SB386K	176
2SB386L	176
2SB386M	176
2SB386OR	176
2SB386R	176
2SB386X	176
2SB386Y	176
2SB387	100
2SB387A	102A
2SB387B	158
2SB387D	158
2SB387E	158
2SB387F	158
2SB387G	158
2SB387GN	158
2SB387H	158
2SB387J	158
2SB387K	158
2SB387L	158
2SB387M	158
2SB387OR	158
2SB387R	158
2SB387X	158
2SB387Y	158
2SB389	102A
2SB389-0	158
2SB389A	158
2SB389B	158
2SB389BK	158
2SB389C	158
2SB389D	158
2SB389E	158
2SB389F	158
2SB389G	158
2SB389GN	158
2SB389H	158
2SB389J	158
2SB389K	158
2SB389L	158
2SB389M	158
2SB389OR	158
2SB389R	158
2SB389X	158
2SB389Y	158
2SB390	127
2SB390A	127
2SB390B	127
2SB390C	127
2SB390D	127
2SB390E	127
2SB390F	127
2SB390G	127
2SB390GN	127
2SB390H	127
2SB390J	127
2SB390K	127
2SB390L	127
2SB390M	127
2SB390OR	127
2SB390R	127
2SB390X	127
2SB390Y	127
2SB391	121
2SB391A	127
2SB391B	127
2SB391C	127
2SB391D	127
2SB391E	127
2SB391F	127
2SB391G	127
2SB391GN	127
2SB391H	127
2SB391J	127
2SB391K	127
2SB391L	127
2SB391M	127
2SB391OR	127
2SB391R	127
2SB391X	127
2SB391Y	127
2SB392	100
2SB392A	158
2SB392B	158
2SB392C	158
2SB392D	158
2SB392E	158
2SB392F	158
2SB392G	158
2SB392GN	158
2SB392H	158
2SB392J	158
2SB392K	158
2SB392L	158
2SB392M	158
2SB392OR	158
2SB392R	158
2SB392X	158
2SB392Y	158
2SB393	100
2SB393A	158
2SB393B	158
2SB393C	158
2SB393D	158
2SB393E	158
2SB393F	158
2SB393G	158
2SB393GN	158
2SB393H	158
2SB393J	158
2SB393K	158
2SB393L	158
2SB393M	158
2SB393OR	158
2SB393R	158
2SB393X	158
2SB393Y	158
2SB394	100
2SB394A	158
2SB394B	158
2SB394C	158
2SB394D	158
2SB394E	158
2SB394F	158
2SB394G	158
2SB394GN	158
2SB394H	158
2SB394K	158
2SB394L	158
2SB394M	158
2SB394OR	158
2SB394R	158
2SB394X	158
2SB394Y	158
2SB395	100
2SB395A	158
2SB395B	158
2SB395C	158
2SB395D	158
2SB395E	158
2SB395F	158
2SB395G	158
2SB395GN	158
2SB395H	158
2SB395J	158
2SB395K	158
2SB395M	158
2SB395OR	158
2SB395R	158
2SB395X	158
2SB395Y	158
2SB396	100

PART NUMBER	NTE REPLACEMENT
2SB396A	158
2SB396B	158
2SB396C	158
2SB396D	158
2SB396E	158
2SB396F	158
2SB396G	158
2SB396GN	158
2SB396H	158
2SB396J	158
2SB396K	158
2SB396L	158
2SB396M	158
2SB396OR	158
2SB396R	158
2SB396X	158
2SB396Y	158
2SB397	160
2SB398	158
2SB400	102A
2SB400(BRIDGE)	5314
2SB400A	102A
2SB400B	102A
2SB400BK	126
2SB400BL	102A
2SB400C	126
2SB400D	126
2SB400E	126
2SB400F	126
2SB400G	126
2SB400GN	126
2SB400H	126
2SB400J	126
2SB400K	102A
2SB400L	126
2SB400M	126
2SB400OR	126
2SB400R	126
2SB400X	126
2SB400Y	126
2SB401	100
2SB401A	158
2SB401B	158
2SB401C	158
2SB401D	158
2SB401E	158
2SB401F	158
2SB401G	158
2SB401GN	158
2SB401H	158
2SB401K	158
2SB401L	158
2SB401M	158
2SB401OR	158
2SB401R	158
2SB401X	158
2SB401Y	158
2SB402	100
2SB402A	158
2SB402B	158
2SB402C	158
2SB402D	158
2SB402E	158
2SB402F	158
2SB402G	158
2SB402GN	158
2SB402H	158
2SB402J	158
2SB402K	158
2SB402L	158
2SB402M	158
2SB402OR	158
2SB402R	158
2SB402X	158
2SB402Y	158
2SB403	100
2SB403A	158
2SB403B	158
2SB403C	158
2SB403D	158
2SB403E	158
2SB403F	158
2SB403G	158
2SB403GN	158
2SB403H	158
2SB403J	158
2SB403K	158
2SB403L	158
2SB403M	158
2SB403OR	158
2SB403R	158
2SB403X	158
2SB403Y	158
2SB405	121
2SB405(IR)	158
2SB405(K)	158
2SB405-0	158
2SB405-1	158
2SB405-2C	158
2SB405-3C	158
2SB405-4C	158
2SB405-O	158
2SB405-OR	158
2SB405-R	158
2SB405A	158
2SB405AG	158
2SB405B	158
2SB405BR	158
2SB405C	158
2SB405D	158
2SB405DK	158
2SB405E	158
2SB405EK	158
2SB405F	158
2SB405G	158
2SB405GN	158
2SB405H	158
2SB405J	158
2SB405K	158
2SB405L	158
2SB405M	158
2SB405OR	158
2SB405P	158
2SB405R	158
2SB405RE	158
2SB405X	158
2SB405Y	158
2SB406	127
2SB407	121
2SB407-0	121
2SB407-O	121
2SB407-OR	121
2SB407A	121
2SB407B	121
2SB407BK	121
2SB407C	121
2SB407D	121
2SB407E	121
2SB407F	121
2SB407G	121
2SB407GN	121
2SB407H	121
2SB407J	121
2SB407K	121
2SB407M	121
2SB407OR	121
2SB407R	121
2SB407TV	121
2SB407TV-2	121
2SB407X	121
2SB407Y	121
2SB408	100
2SB408A	158
2SB408B	158
2SB408C	158
2SB408D	158
2SB408E	158
2SB408F	158
2SB408G	158
2SB408GN	158
2SB408H	158
2SB408J	158
2SB408K	158
2SB408L	158
2SB408M	158
2SB408OR	158
2SB408R	158
2SB408X	158
2SB408Y	158
2SB409	100
2SB410	127
2SB411	127
2SB411TV	127
2SB412	127
2SB413	104
2SB413A	121
2SB413B	121
2SB413C	121
2SB413D	121
2SB413E	121
2SB413F	121
2SB413G	121
2SB413GN	121
2SB413H	121
2SB413J	121
2SB413K	121
2SB413L	121
2SB413M	121
2SB413OR	121
2SB413R	121
2SB413X	121
2SB413Y	121
2SB414	104
2SB414B	121
2SB414C	121
2SB414D	121
2SB414E	121
2SB414F	121
2SB414G	121
2SB414GN	121
2SB414H	121
2SB414J	121
2SB414K	121
2SB414L	121
2SB414M	121
2SB414OR	121
2SB414R	121
2SB414X	121
2SB414Y	121
2SB415	158
2SB415(1)	158
2SB415-OR	158
2SB415A	158
2SB415B	158
2SB415C	158
2SB415D	158
2SB415E	158
2SB415F	158
2SB415G	158
2SB415GN	158
2SB415H	158
2SB415J	158
2SB415K	158
2SB415L	158
2SB415M	158
2SB415MP	158
2SB415OR	158
2SB415R	158
2SB415X	158
2SB415Y	158
2SB416	100
2SB416A	158
2SB416B	158
2SB416C	158
2SB416D	158
2SB416E	158
2SB416F	158
2SB416G	158
2SB416GN	158
2SB416H	158
2SB416J	158
2SB416K	158
2SB416L	158
2SB416M	158
2SB416OR	158
2SB416R	158
2SB416X	158
2SB416Y	158
2SB417	100
2SB417A	158
2SB417B	158
2SB417C	158
2SB417D	158
2SB417E	158
2SB417F	158
2SB417G	158
2SB417GN	158
2SB417H	158
2SB417J	158
2SB417K	158
2SB417L	158
2SB417M	158
2SB417OR	158
2SB417R	158
2SB417X	158
2SB417Y	158
2SB419	131
2SB421	102A
2SB422	102
2SB422A	158
2SB422B	158
2SB422C	158
2SB422D	158
2SB422E	158
2SB422F	158
2SB422G	158
2SB422GN	158
2SB422H	158
2SB422J	158
2SB422K	158
2SB422L	158
2SB422M	158
2SB422OR	158
2SB422R	158
2SB422X	158
2SB422Y	158
2SB423	102
2SB423A	158
2SB423B	158
2SB423C	158
2SB423D	158
2SB423E	158
2SB423F	158
2SB423G	158
2SB423GN	158
2SB423H	158
2SB423J	158
2SB423K	158
2SB423L	158
2SB423M	158
2SB423OR	158
2SB423R	158
2SB423X	158
2SB423Y	158
2SB424	121
2SB424A	127
2SB424B	127
2SB424C	127
2SB424D	127
2SB424E	127
2SB424F	127
2SB424G	127
2SB424GN	127
2SB424H	127
2SB424J	127
2SB424K	127
2SB424L	127
2SB424M	127
2SB424OR	127
2SB424R	127
2SB424X	127
2SB424Y	127
2SB425	127
2SB425-BL	127
2SB425-R	127
2SB425-Y	127
2SB425A	127
2SB425B	127
2SB425C	127
2SB425D	127
2SB425E	127
2SB425F	127
2SB425G	127
2SB425G-BL	127
2SB425G-R	127
2SB425G-Y	127
2SB425H	127
2SB425J	127
2SB425K	127
2SB425L	127
2SB425M	127
2SB425R	127
2SB425X	127
2SB425Y	127
2SB426	121
2SB426-BL	127
2SB426-R	127
2SB426-Y	127
2SB426A	127
2SB426B	127
2SB426BL	121
2SB426C	127
2SB426D	127
2SB426E	127
2SB426F	127
2SB426G	127
2SB426G-BL	127
2SB426G-R	127
2SB426G-Y	127
2SB426GN	127
2SB426J	127
2SB426K	127
2SB426L	127
2SB426M	127
2SB426OR	127
2SB426R	121
2SB426X	127
2SB426Y	121
2SB427	102A
2SB427A	176
2SB427B	176
2SB427C	176
2SB427D	176
2SB427E	176
2SB427F	176
2SB427G	176
2SB427GN	176
2SB427H	176
2SB427J	176
2SB427K	176
2SB427L	176
2SB427M	176
2SB427OR	176
2SB427R	176
2SB427X	176
2SB427Y	176
2SB428	102A
2SB428A	176
2SB428B	176
2SB428C	176
2SB428D	176
2SB428E	176
2SB428F	176
2SB428G	176
2SB428GN	176
2SB428H	176
2SB428J	176
2SB428K	176
2SB428L	176
2SB428M	176
2SB428OR	176
2SB428R	176
2SB428X	176
2SB428Y	176
2SB429	160
2SB430	105
2SB431	158
2SB432	127
2SB432A	127
2SB432B	127
2SB432C	127
2SB432D	127
2SB432E	127
2SB432F	127
2SB432G	127
2SB432GN	127
2SB432H	127
2SB432J	127
2SB432K	127
2SB432L	127
2SB432M	127
2SB432OR	127
2SB432R	127
2SB432X	127
2SB432Y	127
2SB433	105
2SB434	153
2SB434(O)	153
2SB434-O	153
2SB434-ORG	153
2SB434-R	153
2SB434-RED	153
2SB434-Y	153
2SB434R	153
2SB435	153
2SB435-0	153
2SB435-O	153
2SB435-ORG	153
2SB435-R	153
2SB435-RED	153
2SB435-Y	153
2SB435O	153
2SB435R	153
2SB435RY	153
2SB435Y	153
2SB436	160
2SB437	160
2SB439	102A
2SB439/802	102A
2SB439/120144	102A
2SB439/80243900	102A
2SB439A	102A
2SB439B	158
2SB439C	158
2SB439D	158
2SB439E	158
2SB439F	158
2SB439G	158
2SB439GN	158
2SB439H	158
2SB439J	158
2SB439L	158
2SB439M	158
2SB439OR	158
2SB439R	158
2SB439X	158
2SB439Y	158
2SB440	102A
2SB440A	158
2SB440B	158
2SB440C	158
2SB440E	158
2SB440F	158
2SB440G	158
2SB440GN	158
2SB440H	158
2SB440K	158
2SB440L	158
2SB440M	158
2SB440OR	158
2SB440R	158
2SB440X	158
2SB440Y	158
2SB443	102A
2SB443A	102A
2SB443B	102A
2SB443C	158
2SB443D	158
2SB443E	158
2SB443F	158
2SB443G	158
2SB443GN	158
2SB443H	158
2SB443J	158
2SB443K	158
2SB443L	158
2SB443M	158
2SB443OR	158
2SB443R	158
2SB443X	158
2SB443Y	158
2SB444	126
2SB444A	126
2SB444B	126
2SB444C	158
2SB444D	158
2SB444E	158
2SB444F	158
2SB444G	158
2SB444GN	158
2SB444H	158
2SB444K	158
2SB444L	158
2SB444M	158
2SB444OR	158
2SB444R	158
2SB444X	158
2SB444Y	158
2SB445	121
2SB445A	121
2SB445B	121
2SB445C	121
2SB445D	121
2SB445E	121
2SB445F	121
2SB445G	121
2SB445GN	121
2SB445H	121
2SB445J	121
2SB445K	121
2SB445L	121
2SB445M	121
2SB445OR	121
2SB445R	121
2SB445X	121
2SB445Y	121
2SB446	121
2SB446A	121
2SB446B	121
2SB446C	121
2SB446D	121
2SB446E	121
2SB446F	121
2SB446G	121
2SB446GN	121
2SB446H	121
2SB446J	121
2SB446K	121
2SB446L	121
2SB446M	121
2SB446OR	121
2SB446R	121
2SB446X	121
2SB446Y	121
2SB447	127
2SB447A	127
2SB447B	127
2SB447C	127
2SB447D	127
2SB447E	127
2SB447F	127
2SB447G	127
2SB447GN	127
2SB447H	127
2SB447J	127
2SB447K	127
2SB447L	127
2SB447OR	127
2SB447R	127
2SB447X	127
2SB447Y	127
2SB448	131
2SB448A	127
2SB448B	127
2SB448C	127
2SB448D	127
2SB448E	127
2SB448F	127
2SB448G	127
2SB448GN	127
2SB448H	127
2SB448K	127
2SB448L	127
2SB448M	127
2SB448OR	127
2SB448R	127
2SB448X	127
2SB448Y	127
2SB449	121
2SB449(F)	127
2SB449A	127
2SB449B	127
2SB449C	127
2SB449D	127
2SB449E	127
2SB449F	121
2SB449G	127
2SB449GN	127
2SB449H	127
2SB449J	127
2SB449K	127
2SB449L	127
2SB449M	127
2SB449OR	127
2SB449P	121
2SB449PG	127
2SB449X	127
2SB449Y	127
2SB450	158
2SB450A	158
2SB451	158
2SB452	158
2SB452A	158
2SB453	158
2SB454	158
2SB455	158
2SB457	158
2SB457-C	158
2SB457A	158
2SB457AC	158
2SB457B	158
2SB457C	158
2SB457D	158
2SB457E	158
2SB457F	158
2SB457G	158
2SB457GN	158
2SB457H	158
2SB457J	158
2SB457K	158
2SB457L	158
2SB457M	158
2SB457OR	158
2SB457R	158
2SB457X	158
2SB457Y	158
2SB458	131
2SB458(IR)	226
2SB458A	131
2SB458B	131
2SB458BC	131
2SB458BL	131
2SB458C	131
2SB458D	131
2SB458E	131
2SB458F	131
2SB458G	131
2SB458GN	131
2SB458H	131
2SB458J	131
2SB458K	131
2SB458L	131
2SB458M	131
2SB458OR	131
2SB458R	131
2SB458X	131
2SB458Y	131
2SB459	102A
2SB459(C)	102A
2SB459-O	102A
2SB459A	102A
2SB459B	102A
2SB459C	102A
2SB459C-2	158
2SB459D	102A
2SB459E	158
2SB459F	158
2SB459G	158
2SB459GN	158
2SB459H	158
2SB459J	158
2SB459K	158
2SB459L	158
2SB459M	158
2SB459OR	158
2SB459R	158
2SB459X	158
2SB459Y	158
2SB460	102A
2SB460A	102A
2SB460B	102A
2SB460C	176
2SB460D	176
2SB460E	176
2SB460F	176
2SB460G	176
2SB460GN	176
2SB460H	176
2SB460J	176
2SB460K	176
2SB460L	176
2SB460M	176
2SB460OR	176
2SB460R	176
2SB460X	176
2SB460Y	176
2SB461	176
2SB461A	158
2SB461B	158
2SB461BL	158
2SB461C	158
2SB461D	158
2SB461E	158
2SB461F	158
2SB461G	158
2SB461H	158
2SB461J	158
2SB461K	158
2SB461L	158
2SB461M	158
2SB461OR	158
2SB461R	158
2SB461X	158
2SB461Y	158
2SB462	131
2SB462-BL	131
2SB462-BLU	131
2SB462-BLU-G	131
2SB462-R	131
2SB462-RED	131
2SB462-Y	131
2SB462-YEL	131
2SB462-YEL-G	131
2SB462A	131
2SB462B	131
2SB462C	131
2SB462D	131
2SB462E	131
2SB462F	131
2SB462G	131
2SB462G-BL	131
2SB462G-R	131
2SB462G-Y	131
2SB462GN	131
2SB462H	131
2SB462K	131
2SB462L	131
2SB462M	131
2SB462OR	131
2SB462R	131
2SB462X	131
2SB462Y	131
2SB463	131
2SB463(1)	131
2SB463-BLU	131
2SB463-BLU-G	131
2SB463-O	131
2SB463-RED	131
2SB463-RED-G	131
2SB463-YEL	131
2SB463-YEL-G	131
2SB463A	131
2SB463B	131
2SB463BL	131
2SB463BLU	131
2SB463BLU-G	131
2SB463C	131
2SB463D	131
2SB463E	131
2SB463F	131
2SB463G	131
2SB463G-BL	131
2SB463G-R	131
2SB463G-Y	131
2SB463GN	131
2SB463H	131
2SB463J	131
2SB463K	131
2SB463L	131
2SB463M	131
2SB463OR	131
2SB463R	131
2SB463RED	131
2SB463RED-G	131
2SB463X	131
2SB463XL	131
2SB463Y	131
2SB463YEL	131
2SB463YEL-G	131
2SB464	127
2SB464A	127
2SB464B	127
2SB464C	127
2SB464D	127
2SB464E	127
2SB464F	127
2SB464G	127
2SB464GN	127
2SB464H	127
2SB464J	127
2SB464K	127
2SB464M	127
2SB464OR	127
2SB464X	127
2SB464Y	127
2SB465	158
2SB465A	127
2SB465B	127

PART NUMBER	NTE REPLACEMENT
2SB465C	127
2SB465D	127
2SB465E	127
2SB465F	127
2SB465G	127
2SB465GN	127
2SB465H	127
2SB465J	127
2SB465K	127
2SB465L	127
2SB465M	127
2SB465R	127
2SB465X	127
2SB465Y	127
2SB466	131
2SB466A	127
2SB466B	127
2SB466C	127
2SB466D	127
2SB466E	127
2SB466F	127
2SB466G	127
2SB466GN	127
2SB466H	127
2SB466J	127
2SB466K	127
2SB466L	127
2SB466M	127
2SB466OR	127
2SB466R	127
2SB466X	127
2SB466Y	127
2SB467	131
2SB467A	127
2SB467C	127
2SB467D	127
2SB467E	127
2SB467F	127
2SB467G	127
2SB467GN	127
2SB467H	127
2SB467J	127
2SB467K	127
2SB467L	127
2SB467M	127
2SB467OR	127
2SB467X	127
2SB467Y	127
2SB468	127
2SB468-OR	127
2SB468A	127
2SB468B	127
2SB468B-5	127
2SB468C	127
2SB468D	127
2SB468E	127
2SB468F	127
2SB468G	127
2SB468GN	127
2SB468H	127
2SB468J	127
2SB468K	127
2SB468L	127
2SB468OR	127
2SB468X	127
2SB468Y	127
2SB470	102
2SB470A	158
2SB470B	158
2SB470C	158
2SB470D	158
2SB470E	158
2SB470F	158
2SB470G	158
2SB470GN	158
2SB470H	158
2SB470J	158
2SB470K	158
2SB470L	158
2SB470M	158
2SB470OR	158
2SB470R	158
2SB470X	158
2SB470Y	158
2SB471	121
2SB471-2	121
2SB471-0	121
2SB471A	121
2SB471B	121
2SB471C	171
2SB471D	121
2SB471E	121
2SB471F	121
2SB471G	121
2SB471GN	121
2SB471H	121
2SB471J	121
2SB471K	121
2SB471L	121
2SB471M	121
2SB471OR	121
2SB471R	121
2SB471X	121
2SB471Y	121
2SB472	121
2SB472(B)	127
2SB472A	121
2SB472B	121
2SB472C	127
2SB472D	127
2SB472E	127
2SB472F	127
2SB472G	127
2SB472GN	127
2SB472H	127
2SB472J	127
2SB472K	127
2SB472M	127
2SB472OR	127
2SB472X	127
2SB472Y	127
2SB473	131
2SB473(H)	131MP
2SB473B	131
2SB473D	131
2SB473F	131
2SB473H	131
2SB474	226
2SB474-2	226
2SB474-3	226
2SB474-4	226
2SB474-6D	226
2SB474-OR	226
2SB474A	226
2SB474B	226
2SB474C	226
2SB474D	226
2SB474E	226
2SB474F	226
2SB474G	226
2SB474GN	226
2SB474H	226
2SB474J	226
2SB474K	226
2SB474L	226
2SB474M	226
2SB474MP	226
2SB474OR	226
2SB474R	226
2SB474S	226
2SB474V4	226
2SB474V10	226
2SB474X	226
2SB474Y	226
2SB474YE1	226
2SB474YEL	226
2SB475	158
2SB475A	158
2SB475B	158
2SB475C	158
2SB475D	158
2SB475E	158
2SB475F	158
2SB475G	158
2SB475GN	158
2SB475H	158
2SB475J	158
2SB475K	158
2SB475L	158
2SB475M	158
2SB475OR	158
2SB475P	158
2SB475PL	158
2SB475Q	158
2SB475R	158
2SB475X	158
2SB475Y	158
2SB476	176
2SB477	176
2SB477(C)	102
2SB477A	176
2SB477C	126
2SB477D	176
2SB477E	176
2SB477F	176
2SB477G	176
2SB477GN	176
2SB477H	176
2SB477J	176
2SB477K	176
2SB477L	176
2SB477M	176
2SB477OR	176
2SB477R	176
2SB477X	176
2SB477Y	176
2SB479	213
2SB480	213
2SB481	131
2SB481-OR	131
2SB481A	131
2SB481B	131
2SB481C	131
2SB481D	131
2SB481E	131
2SB481F	131
2SB481G	131
2SB481GN	131
2SB481H	131
2SB481J	131
2SB481K	131
2SB481L	131
2SB481M	131
2SB481OR	131
2SB481R	131
2SB481X	131
2SB482	102A
2SB482A	158
2SB482B	158
2SB482C	158
2SB482D	158
2SB482E	158
2SB482F	158
2SB482G	158
2SB482GN	158
2SB482H	158
2SB482J	158
2SB482K	158
2SB482L	158
2SB482M	158
2SB482V	158
2SB482X	158
2SB482Y	158
2SB483	179
2SB484	179
2SB485	179
2SB486	102
2SB486A	158
2SB486B	158
2SB486C	158
2SB486D	158
2SB486E	158
2SB486F	158
2SB486G	158
2SB486GN	158
2SB486H	158
2SB486J	158
2SB486K	158
2SB486L	158
2SB486M	158
2SB486OR	158
2SB486R	158
2SB486X	158
2SB486Y	158
2SB492	176
2SB492A	158
2SB492B	176
2SB492C	158
2SB492D	158
2SB492E	158
2SB492F	158
2SB492G	158
2SB492GN	158
2SB492H	158
2SB492J	158
2SB492K	158
2SB492L	158
2SB492M	158
2SB492OR	158
2SB492R	158
2SB492X	158
2SB492Y	158
2SB493	158
2SB494	158
2SB495	158
2SB495A	158
2SB495B	158
2SB495C	158
2SB495D	158
2SB495E	158
2SB495F	158
2SB495G	158
2SB495GN	158
2SB495H	158
2SB495J	158
2SB495K	158
2SB495L	158
2SB495M	158
2SB495OR	158
2SB495R	158
2SB495T	158
2SB495X	158
2SB495Y	158
2SB496	102A
2SB496A	158
2SB496B	158
2SB496C	158
2SB496D	158
2SB496E	158
2SB496F	158
2SB496G	158
2SB496GN	158
2SB496H	158
2SB496J	158
2SB496K	158
2SB496L	158
2SB496M	158
2SB496OR	158
2SB496R	158
2SB496X	158
2SB496Y	158
2SB497	102
2SB497A	158
2SB497B	158
2SB497C	158
2SB497D	158
2SB497E	158
2SB497F	158
2SB497G	158
2SB497GN	158
2SB497H	158
2SB497J	158
2SB497K	158
2SB497L	158
2SB497M	158
2SB497OR	158
2SB497R	158
2SB497X	158
2SB497Y	158
2SB498	102A
2SB498A	158
2SB498B	158
2SB498C	158
2SB498D	158
2SB498E	158
2SB498F	158
2SB498G	158
2SB498GN	158
2SB498H	158
2SB498J	158
2SB498K	158
2SB498L	158
2SB498M	158
2SB498OR	158
2SB498R	158
2SB498X	158
2SB498Y	158
2SB502	197
2SB503	197
2SB503-R	126
2SB503A-R	126
2SB505	292
2SB506	281
2SB506A	281
2SB506B	281
2SB506C	281
2SB506D	281
2SB507	153
2SB507E	153
2SB508	153
2SB509	153
2SB510	129
2SB510S	129
2SB511	153
2SB511C	153
2SB511D	153
2SB511E	153
2SB512	153
2SB512-0	153
2SB512-O	153
2SB512A	153
2SB512P	153
2SB513	130
2SB513A	153
2SB513P	153
2SB513Q	153
2SB513R	153
2SB514	153
2SB514A	197
2SB515	153
2SB516	102A
2SB516(C)	126
2SB516(D)	126
2SB516C	102A
2SB516CD	102A
2SB516CD(P)	126
2SB516D	102A
2SB516P	102A
2SB518	180
2SB519	180
2SB520	285
2SB521	197
2SB522	197
2SB523	187A
2SB524	153
2SB525	298
2SB525C	298
2SB525D	298
2SB525E	298
2SB526	292
2SB526C	292
2SB527	292
2SB528	292
2SB529	153
2SB530	281
2SB531	219
2SB532	285
2SB532P	285
2SB532Q	285
2SB532R	285
2SB532S	285
2SB533	176
2SB534	102A
2SB534(A)	158
2SB534A	102A
2SB535	158
2SB536	292
2SB536A	292
2SB536K	292
2SB536L	292
2SB536M	292
2SB537	153
2SB537L	292
2SB537LM	153
2SB538	179
2SB539	285
2SB540	158
2SB541	281
2SB542	194
2SB542D	194
2SB544	294
2SB544D	294
2SB544E	294
2SB544F	294
2SB544P1	383
2SB544P1D	383
2SB544P1E	383
2SB544P1F	383
2SB544P2	383
2SB546	398
2SB546A	398
2SB546AK	398
2SB546AL	398
2SB546AM	398
2SB546E	398
2SB546EK	398
2SB546EX	398
2SB546I	398
2SB546K	398
2SB546L	398
2SB546M	398
2SB547	398
2SB547A	398
2SB547K	398
2SB547L	398
2SB547M	398
2SB548	374
2SB548-Q	374
2SB548-R	374
2SB548-S	374
2SB548Q	374
2SB548R	374
2SB548S	374
2SB549	374
2SB549-Q	374
2SB549-R	374
2SB549-S	374
2SB549P	374
2SB549Q	374
2SB549R	374
2SB549S	374
2SB550	197
2SB551H	218
2SB553Y	197
2SB554	285
2SB554-0	285
2SB554-R	285
2SB554E	294
2SB555	281
2SB555-0	281
2SB555-R	281
2SB555R	285
2SB556	126
2SB556-R	126
2SB557	281
2SB557-R	285
2SB558	130
2SB558-R	285
2SB559	185
2SB560	298
2SB560D	298
2SB560E	298
2SB560F	298
2SB560G	383
2SB561	290A
2SB561B	298
2SB561C	298
2SB562	294
2SB562-C	294
2SB562B	294
2SB562C	25
2SB562D	294
2SB563	218
2SB564	294
2SB564K	294
2SB564L	294
2SB564M	294
2SB564QRS	294
2SB565	158
2SB565A	158
2SB565B	158
2SB565C	158
2SB565D	158
2SB565E	158
2SB565F	158
2SB565G	158
2SB565GN	158
2SB565H	158
2SB565J	158
2SB565K	158
2SB565L	158
2SB565M	158
2SB565OR	158
2SB565R	158
2SB565X	158
2SB565Y	158
2SB566	292
2SB566A	292
2SB566C	197
2SB566D	292
2SB568	398
2SB568B	398
2SB568C	398
2SB568D	398
2SB568WT	398
2SB569	185
2SB570	185
2SB571	185
2SB572	187A
2SB573	187A
2SB574	187A
2SB575	185
2SB576	185
2SB577	185
2SB578	183
2SB579	183
2SB580	183
2SB581	331
2SB582	183
2SB583	183
2SB584	331
2SB585	244
2SB586	244
2SB587	248
2SB588	248
2SB589	248
2SB595	55
2SB595-0	332
2SB595-0	332
2SB595-Y	332
2SB595R	332
2SB595Y	332
2SB596	197
2SB596-0	197
2SB596-4	197
2SB596-0	197
2SB596Y	197
2SB598	159
2SB598(E)	159
2SB598(F)	159
2SB598E	159
2SB598F	159
2SB600	88
2SB600(BRIDGE)	5315
2SB601	262
2SB601K	262
2SB604	197
2SB605	294
2SB605K	294
2SB606	288
2SB607	158
2SB608	398
2SB608A	398
2SB608AB	398
2SB608AC	398
2SB608AD	398
2SB608B	398
2SB608C	398
2SB608D	398
2SB619	158
2SB620	106
2SB621	159
2SB621A	294
2SB621Q	294
2SB621R	294
2SB624-BV4	2407
2SB626	180
2SB628	398
2SB628Q	398
2SB628R	398
2SB628S	398
2SB631	292
2SB631E	374
2SB631F	374
2SB631KE	374
2SB632	185
2SB632E	185
2SB632K	185
2SB632K-SA-E	185
2SB632KE	185
2SB633E	378
2SB634	19
2SB634Q	19
2SB634R	19
2SB635	102A
2SB636	102A
2SB640	229
2SB641	19
2SB641(P)	19
2SB641(Q)	19
2SB641(R)	19
2SB641(S)	19
2SB641-P	19
2SB641-Q	19
2SB641-QR	19
2SB641-R	19
2SB641-S	19
2SB641B	19
2SB641C	290A
2SB641P	19
2SB641PQR	19
2SB641PQRS	19
2SB641Q	19
2SB641QR	19
2SB641QRS	19
2SB641R	19
2SB641RS	19
2SB641S	19
2SB641T	19
2SB642	19
2SB642(P)	19
2SB642(Q)	19
2SB642(R)	19
2SB642(S)	19
2SB642-0	290A
2SB642-9	19
2SB642-E	19
2SB642-P	19
2SB642-PQR	19
2SB642-Q	19
2SB642-QR	19
2SB642-R	19
2SB642-S	19
2SB642A	290A
2SB642P	19
2SB642PQR	19
2SB642Q	19
2SB642QR	19
2SB642QRS	19
2SB642R	19
2SB642RS	19
2SB642S	19
2SB642T	19
2SB643	19
2SB643(Q)	19
2SB643(R)	19
2SB643(S)	19
2SB643-0	290A
2SB643-O	290A
2SB643-P	19
2SB643-PQR	19
2SB643-Q	19
2SB643-R	19
2SB643-S	19
2SB643P	19
2SB643PQR	19
2SB643Q	19
2SB643R	19
2SB643RS	19
2SB643S	19
2SB644	19
2SB644(C)	19
2SB644(Q)	19
2SB644(R)	19
2SB644(S)	19
2SB644-0	290A
2SB644-Q	19
2SB644-R	19
2SB644C	19
2SB644Q	19
2SB644QR	19
2SB644R	19
2SB644S	19
2SB645E	123AP
2SB646	383
2SB646A	383
2SB646AB	383
2SB646AC	383
2SB646B	383
2SB646C	383
2SB646D	383
2SB647	383
2SB647A	383
2SB647AB	383
2SB647AC	383
2SB647B	383
2SB647C	383
2SB647D	383
2SB648	374
2SB648A	374
2SB648AC	374
2SB648C	374
2SB649	374
2SB649A	374
2SB649A-B	374
2SB649AB	374
2SB649AC	374
2SB649AD	374
2SB649C	374
2SB653	88
2SB654	88
2SB655	285
2SB656	285
2SB668	153
2SB669	262
2SB673	262
2SB674	262
2SB675	262
2SB676	292
2SB681	285
2SB682	292
2SB683	294
2SB684	294
2SB685	271
2SB686	37
2SB688	37
2SB688-0	37
2SB688-0(BS)	37
2SB688R	37
2SB689	292
2SB690	292
2SB691	37
2SB692	37
2SB696	281
2SB697	285
2SB697C	285
2SB697D	285
2SB697E	285
2SB697K	285
2SB697KC	285
2SB697KD	285
2SB697KE	285
2SB698	290A
2SB698(F)	290A
2SB698(G)	290A
2SB698-AA	290A
2SB698-T	290A
2SB698D	290A
2SB698E	290A
2SB698F	290A
2SB699	93
2SB699B	93
2SB699C	93
2SB699Q	153
2SB700	34
2SB701	34
2SB702	34
2SB703A	292
2SB703Q	292
2SB705	93
2SB707	197
2SB707K	197
2SB709	159
2SB709(Q)	2409
2SB709(R)	2409
2SB709(S)	2409
2SB709A	2409
2SB709A-QW	2409
2SB709A-R	2409
2SB709AQW	2409
2SB709R	2409
2SB710(Q)	2407
2SB710(R)	2407
2SB710(S)	2407
2SB710-Q	2407
2SB712	262
2SB713	37
2SB715	91
2SB715D	91
2SB715E	91
2SB716	91
2SB716A	91
2SB716AD	91
2SB716D	91
2SB716E	91
2SB716G	91
2SB719	398
2SB719A	398

PART NUMBER	NTE REPLACEMENT
2SB719B	398
2SB719C	398
2SB719D	398
2SB719Q	290A
2SB719R	290A
2SB720	398
2SB721	123
2SB722	285
2SB723	285
2SB726	290A
2SB726A	290A
2SB726R	290A
2SB726S	290A
2SB726T	290A
2SB731	374
2SB733	294
2SB733-U2	294
2SB733K	294
2SB734	294
2SB734-4	383
2SB734-34	294
2SB734K	294
2SB734U	383
2SB738D	294
2SB739B	294
2SB739Q	383
2SB739R	383
2SB740	383
2SB740-3	383
2SB740B	383
2SB740C	383
2SB741	383
2SB741B	383
2SB741C	383
2SB741Q	383
2SB743	19
2SB743Q	185
2SB744	185
2SB744Q	290A
2SB744R	290A
2SB744S	290A
2SB745	234
2SB745A	234
2SB745AS	234
2SB745S	234
2SB745T	234
2SB748	34
2SB749	34
2SB749AB	93
2SB751	262
2SB753	378
2SB754	37
2SB755	34
2SB755-0	34
2SB755-R	34
2SB755O	34
2SB755R	34
2SB759Q	234
2SB759R	234
2SB761	242
2SB761B	378
2SB761L	378
2SB761LB	242
2SB761LBP	242
2SB761LBQ	242
2SB761P	242
2SB761Q	242
2SB761QLB	242
2SB761R	242
2SB762	55
2SB762P	242
2SB762Q	242
2SB763	37
2SB764	383
2SB764(F)	383
2SB764D	383
2SB764E	383
2SB764F	383
2SB765K	262
2SB766	2429
2SB772	185
2SB772(P)	185
2SB772(Q)	185
2SB772(R)	185
2SB772-P	374
2SB772-Q	185
2SB772Q	374
2SB772R	374
2SB774	290A
2SB774(RS)-T	290A
2SB774Q	290A
2SB774R	290A
2SB774S	290A
2SB774T	290A
2SB775	37
2SB776	37
2SB780	290A
2SB788	91
2SB788Q	91
2SB788R	91
2SB788S	91
2SB788T	91
2SB788U	91
2SB793	383
2SB793(Q)	383
2SB793(R)	383
2SB793(S)	383
2SB793-QRS	383
2SB793Q	383
2SB793R	383
2SB793S	383
2SB794	254
2SB794K	254
2SB794L	254
2SB794M	254
2SB795	254
2SB795L	254
2SB798	2429
2SB800(BRIDGE)	5316
2SB808F	383
2SB808G1	383
2SB810	294
2SB810E	294
2SB810F	294
2SB810H	294
2SB810J	294
2SB813	292
2SB816	37
2SB817	37
2SB819	21
2SB819(Q)	21
2SB819(R)	21
2SB819AU	21
2SB819AU(Q)	21
2SB819AU(R)	21
2SB819AUQ	21
2SB819AUR	21
2SB819P	294
2SB819Q	21
2SB819QR	21
2SB819R	21
2SB822	21
2SB822P	21
2SB822Q	21
2SB822R	21
2SB823	55
2SB824	378
2SB824-0	378
2SB824-Y	378
2SB824Q	378
2SB824R	378
2SB825	197
2SB825R	197
2SB826	378
2SB826Q	378
2SB826R	378
2SB827	2314
2SB827Q	2314
2SB827R	2314
2SB827S	2314
2SB828	2314
2SB828Q	2314
2SB828R	2314
2SB828S	2314
2SB829	2314
2SB829Q	2314
2SB829R	2314
2SB829S	2314
2SB834	197
2SB834-0	197
2SB834-0	153
2SB834O	153
2SB835	294
2SB835(B)	294
2SB835(Q)	294
2SB835(R)	294
2SB835(S)	294
2SB835(T)	294
2SB835S	294
2SB835T	294
2SB849	37
2SB850	378
2SB851	19
2SB851P	19
2SB851Q	19
2SB851R	19
2SB855	55
2SB856	55
2SB857	55
2SB857C	55
2SB858	55
2SB859	55
2SB860	55
2SB861	398
2SB861-02	398
2SB861-02-C	398
2SB861-02C	398
2SB861C	398
2SB863	37
2SB870	55
2SB872	262
2SB882	264
2SB883	271
2SB884	262
2SB885	262
2SB886	264
2SB892S	383
2SB892SZ	383
2SB892T	393
2SB892TZ	383
2SB893	12
2SB893E	12
2SB893F	12
2SB893G	12
2SB894	17
2SB894(Q)	17
2SB894(R)	17
2SB894(S)	17
2SB894Q	17
2SB894R	17
2SB894S	17
2SB908	2352
2SB909	21
2SB909M	21
2SB909MP	21
2SB909MQ	21
2SB909MR	21
2SB910	19
2SB910M	19
2SB910MP	19
2SB910MQ	19
2SB910MR	19
2SB911	21
2SB911M	21
2SB911MP	21
2SB911MQ	21
2SB911MR	21
2SB914	250
2SB921	55
2SB925	378
2SB925-Q	378
2SB925-R	378
2SB925A	378
2SB925A-Q	378
2SB925A-R	378
2SB925AQ	378
2SB925AR	378
2SB925Q	378
2SB925R	378
2SB926-T	12
2SB940-P	398
2SB940A-P	398
2SB940AP	398
2SB940APLB	375
2SB940LBP	398
2SB940P	398
2SB940PLB	398
2SB941	55
2SB941(P)	55
2SB941(Q)	55
2SB941P	55
2SB941PB	55
2SB941PD	55
2SB941PQ	55
2SB941Q	55
2SB949	262
2SB949(P)	262
2SB949(Q)	262
2SB949A	262
2SB953	378
2SB970	2407
2SB976	91
2SB976(Q)	91
2SB976(R)	91
2SB976P	12
2SB976Q	12
2SB976R	91
2SB984	32
2SB1000(BRIDGE)	5317
2SB1009P	185
2SB1050(Q)	12
2SB1050(R)	12
2SB1060B	182
2SB1134	153
2SB1134R	153
2SB1134R-SA	153
2SB1135R	153
2SB1151	185
2SB1274(Q)	3098
2SB1274(R)	153
2SB1274-Q-RA	153
2SB1274-R-RA	153
2SB1274Q	153
2SB1274Q-RA	153
2SB1274R	153
2SB1364	102
2SB1760	102
2SB1780	158
2SB1780A	158
2SB1780B	158
2SB1780C	158
2SB1780D	158
2SB1780E	158
2SB1780F	158
2SB1780G	158
2SB1780GN	158
2SB1780H	158
2SB1780J	158
2SB1780K	158
2SB1780L	158
2SB1780M	158
2SB1780OR	158
2SB1780R	158
2SB1780X	158
2SB1780Y	158
2SB1785	102
2SB1851	102A
2SB1860	102
2SB3030	102A
2SB3224E	106
2SB3240	158
2SB3240A	158
2SB3240B	158
2SB3240C	158
2SB3240D	158
2SB3240E	158
2SB3240F	158
2SB3240G	158
2SB3240GN	158
2SB3240H	158
2SB3240J	158
2SB3240K	158
2SB3240L	158
2SB3240M	158
2SB3240OR	158
2SB3240R	158
2SB3240X	158
2SB3240Y	158
2SB3244	100
2SB3244H	158
2SB3783A	158
2SB3783B	158
2SB3783C	158
2SB3783D	158
2SB3783E	158
2SB3783F	158
2SB3783G	158
2SB3783GN	158
2SB3783H	158
2SB3783J	158
2SB3783K	158
2SB3783L	158
2SB3783M	158
2SB3783OR	158
2SB3783R	158
2SB3783X	158
2SB3783Y	158
2SB3812A	158
2SB3812B	158
2SB3812C	158
2SB3812D	158
2SB3812F	158
2SB3812G	158
2SB3812GN	158
2SB3812H	158
2SB3812J	158
2SB3812K	158
2SB3812L	158
2SB3812M	158
2SB3812OR	158
2SB3812R	158
2SB3812X	158
2SB3812Y	158
2SB3813A	158
2SB3813B	158
2SB3813C	158
2SB3813D	158
2SB3813E	158
2SB3813F	158
2SB3813G	158
2SB3813GN	158
2SB3813H	158
2SB3813J	158
2SB3813K	158
2SB3813L	158
2SB3813M	158
2SB3813OR	158
2SB3813R	158
2SB3813X	158
2SB3813Y	158
2SB4151	102
2SB4340	197
2SB4440D	158
2SB4631	131
2SB6420Q	290
2SB6425	290A
2SB6435	19
2SB7513	100
2SB8340	197
2SB8344	197
2SB17313	102
2SB-2C	506
2SB-553-0	197
2SB-553-Y	197
2SB-909	21
2SB-3783	158
2SB-3812	158
2SB-3813	158
2SB-C731	116
2SB-F1A	158
2SB-S131	156
2SB-S851	166
2SBF1	102A
2SBF1A	102A
2SBF2	102A
2SBF2A	158
2SBF5	121
2SBM77	158
2SBU86	102
2SBZ	127
2SC1S83G	42
2SC3T2Y	123AP
2SC6	195A
2SC7	130
2SC9	236
2SC11	101
2SC11A	101
2SC11B	101
2SC11C	101
2SC11D	101
2SC11E	101
2SC11F	101
2SC11G	101
2SC11GN	101
2SC11H	101
2SC11J	101
2SC11K	101
2SC11L	101
2SC11M	101
2SC110R	101
2SC11R	101
2SC11X	101
2SC11Y	101
2SC12	128
2SC12A	128
2SC12B	128
2SC12C	128
2SC12D	128
2SC12E	128
2SC12F	128
2SC12G	128
2SC12GN	128
2SC12H	128
2SC12J	128
2SC12K	128
2SC12L	128
2SC12M	128
2SC12OR	128
2SC12R	128
2SC12SC1923R	229
2SC12X	128
2SC12Y	128
2SC13	101
2SC13A	101
2SC13B	101
2SC13C	101
2SC13D	101
2SC13E	101
2SC13F	101
2SC13G	101
2SC13GN	101
2SC13H	101
2SC13J	101
2SC13K	101
2SC13L	101
2SC13M	101
2SC13OR	101
2SC13R	101
2SC13X	101
2SC13Y	101
2SC14	101
2SC14A	101
2SC14B	101
2SC14C	101
2SC14D	101
2SC14E	101
2SC14F	101
2SC14G	101
2SC14GN	101
2SC14H	101
2SC14J	101
2SC14K	101
2SC14L	101
2SC14M	101
2SC14OR	101
2SC14R	101
2SC14X	101
2SC14Y	101
2SC15	123AP
2SC15-0	192
2SC15-1	123AP
2SC15-2	123AP
2SC15-3	123AP
2SC15A	192
2SC15B	192
2SC15C	192
2SC15D	192
2SC15E	192
2SC15F	192
2SC15G	192
2SC15GN	192
2SC15H	192
2SC15J	192
2SC15K	192
2SC15L	192
2SC15M	192
2SC15OR	192
2SC15R	192
2SC15X	192
2SC15Y	192
2SC16	123AP
2SC16A	123AP
2SC16B	192
2SC16C	192
2SC16D	192
2SC16E	192
2SC16F	192
2SC16G	192
2SC16GN	192
2SC16H	192
2SC16J	192
2SC16K	192
2SC16L	192
2SC16M	192
2SC16OR	192
2SC16R	192
2SC16X	192
2SC16Y	192
2SC17	108
2SC17A	108
2SC17B	229
2SC17C	229
2SC17D	229
2SC17E	229
2SC17F	229
2SC17G	229
2SC17GN	229
2SC17H	229
2SC17J	229
2SC17K	229
2SC17L	229
2SC17M	229
2SC17OR	229
2SC17R	229
2SC17X	229
2SC17Y	229
2SC18	123AP
2SC18A	192
2SC18B	192
2SC18C	192
2SC18D	192
2SC18E	192
2SC18F	192
2SC18G	192
2SC18GN	192
2SC18H	192
2SC18J	192
2SC18K	192
2SC18L	192
2SC18M	192
2SC18OR	192
2SC18R	192
2SC18X	192
2SC19	128
2SC19A	128
2SC19B	128
2SC19C	128
2SC19D	128
2SC19E	128
2SC19F	128
2SC19G	128
2SC19GN	128
2SC19H	128
2SC19J	128
2SC19K	128
2SC19L	128
2SC19M	128
2SC19OR	128
2SC19R	128
2SC19X	128
2SC19Y	128
2SC20	128
2SC20A	128
2SC20B	128
2SC20C	128
2SC20D	128
2SC20E	128
2SC20F	128
2SC20G	128
2SC20GN	128
2SC20H	128
2SC20J	128
2SC20K	128
2SC20L	128
2SC20M	128
2SC20OR	128
2SC20R	128
2SC20X	128
2SC20Y	128
2SC21	130
2SC21A	181
2SC21B	181
2SC21C	181
2SC21D	181
2SC21E	181
2SC21F	181
2SC21G	181
2SC21GN	181
2SC21H	181
2SC21J	181
2SC21K	181
2SC21L	181
2SC21M	181
2SC21OR	181
2SC21R	181
2SC21X	181
2SC21Y	181
2SC22	128
2SC22A	128
2SC22B	128
2SC22D	128
2SC22E	128
2SC22F	128
2SC22G	128
2SC22GN	128
2SC22H	128
2SC22J	128
2SC22K	128
2SC22L	128
2SC22M	128
2SC22OR	128
2SC22R	128
2SC22X	128
2SC22Y	128
2SC23	128
2SC23A	128
2SC23B	128
2SC23D	128
2SC23E	128
2SC23F	128
2SC23G	128
2SC23GN	128
2SC23H	128
2SC23J	128
2SC23K	128
2SC23L	128
2SC23M	128
2SC23OR	128
2SC23R	128
2SC23X	128
2SC23Y	128
2SC24	128
2SC24A	128
2SC24B	128
2SC24C	128
2SC24D	128
2SC24E	128
2SC24F	128
2SC24G	128
2SC24GN	128
2SC24H	128
2SC24J	128
2SC24K	128
2SC24L	128
2SC24M	128
2SC24OR	128
2SC24R	128
2SC24X	128
2SC24Y	128
2SC26	123AP
2SC26A	192
2SC26B	192
2SC26C	192
2SC26D	192
2SC26E	192
2SC26F	192
2SC26G	192
2SC26GN	192
2SC26H	192
2SC26J	192
2SC26K	192
2SC26L	192
2SC26M	192
2SC26OR	192
2SC26R	192
2SC26X	192
2SC26Y	192
2SC27	128
2SC27A	128
2SC27B	128
2SC27D	128
2SC27E	128
2SC27F	128
2SC27G	128
2SC27GN	128
2SC27H	128
2SC27J	128
2SC27K	128
2SC27L	128
2SC27M	128
2SC27OR	128
2SC27R	128
2SC27X	128
2SC27Y	128
2SC28	123
2SC28A	199
2SC28B	199
2SC28C	199
2SC28D	199
2SC28E	199
2SC28F	199
2SC28G	199
2SC28GN	199
2SC28H	199
2SC28J	199
2SC28K	199
2SC28L	199
2SC28M	199
2SC28OR	199
2SC28R	199
2SC28X	199
2SC28Y	199
2SC29	123
2SC29A	108
2SC29B	108
2SC29C	108
2SC29D	108
2SC29E	108
2SC29F	108
2SC29G	108
2SC29GN	108
2SC29H	108
2SC29J	108
2SC29K	108
2SC29L	108
2SC29M	108
2SC29OR	108
2SC29R	108
2SC29X	108
2SC29Y	108
2SC30	123A
2SC30-OR	123A
2SC30A	123A
2SC30B	123A
2SC30C	123A
2SC30D	123A
2SC30E	123A
2SC30F	123A
2SC30G	123A
2SC30GN	123A
2SC30H	123A
2SC30J	123A
2SC30L	123A
2SC30M	123A
2SC30OR	123A
2SC30R	123A
2SC30X	123A
2SC30Y	123A
2SC31	128
2SC31A	128
2SC31B	128
2SC31C	128
2SC31D	128
2SC31E	128
2SC31F	128
2SC31G	128
2SC31GN	128
2SC31H	128
2SC31J	128
2SC31K	128
2SC31L	128
2SC31M	128
2SC31OR	128
2SC31R	128
2SC31X	128
2SC31Y	128
2SC32	128
2SC32A	128
2SC32B	128
2SC32C	128
2SC32D	123AP
2SC32E	128
2SC32F	128
2SC32G	128
2SC32GN	128
2SC32H	128
2SC32J	128
2SC32K	128

PART NUMBER	NTE REPLACEMENT
2SC32L	128
2SC32M	128
2SC320R	128
2SC32R	128
2SC32X	128
2SC32Y	128
2SC33	123AP
2SC33A	192
2SC33B	192
2SC33C	192
2SC33D	192
2SC33E	192
2SC33F	192
2SC33G	192
2SC33GN	192
2SC33H	192
2SC33J	192
2SC33K	192
2SC33L	192
2SC33M	192
2SC330R	192
2SC33R	192
2SC33X	192
2SC33Y	192
2SC34	103A
2SC34A	103A
2SC34C	103A
2SC34D	103A
2SC34E	103A
2SC34F	103A
2SC34G	103A
2SC34GN	103A
2SC34H	103A
2SC34J	103A
2SC34K	103A
2SC34L	103A
2SC34M	103A
2SC340R	103A
2SC34R	103A
2SC34X	103A
2SC34Y	103A
2SC35	103A
2SC35A	103A
2SC35B	103A
2SC35C	103A
2SC35E	103A
2SC35F	103A
2SC35G	103A
2SC35GN	103A
2SC35H	103A
2SC35J	103A
2SC35K	103A
2SC35L	103A
2SC35M	103A
2SC350R	103A
2SC35X	103A
2SC35Y	103A
2SC36	101
2SC36B	101
2SC36C	101
2SC36D	101
2SC36E	101
2SC36F	101
2SC36G	101
2SC36GN	101
2SC36H	101
2SC36J	101
2SC36K	101
2SC36L	101
2SC36M	101
2SC360R	101
2SC36R	101
2SC36X	101
2SC36Y	101
2SC37	123AP
2SC37A	108
2SC37B	108
2SC37C	108
2SC37D	108
2SC37E	108
2SC37F	108
2SC37G	108
2SC37GN	108
2SC37H	108
2SC37J	108
2SC37K	108
2SC37L	108
2SC37M	108
2SC370R	108
2SC37R	108
2SC37X	108
2SC37Y	108
2SC38	123AP
2SC38A	195A
2SC38B	195A
2SC38C	195A
2SC38D	195A
2SC38E	195A
2SC38F	195A
2SC38G	195A
2SC38H	195A
2SC38J	195A
2SC38K	195A
2SC38L	195A
2SC38M	195A
2SC380R	195A
2SC38R	195A
2SC38X	195A
2SC38Y	195A
2SC39	108
2SC39A	108
2SC39B	108
2SC39C	108
2SC39D	108
2SC39E	108
2SC39F	108
2SC39G	108
2SC39GN	108
2SC39H	108
2SC39J	108
2SC39K	108
2SC39L	108
2SC39M	108
2SC39OR	108
2SC39R	108
2SC39X	108
2SC39Y	108
2SC40	108
2SC40A	108
2SC40B	108
2SC40C	108
2SC40D	108
2SC40E	108
2SC40F	108
2SC40G	108
2SC40GN	108
2SC40H	108
2SC40J	108
2SC40K	108
2SC40L	108
2SC400R	108
2SC40R	108
2SC40X	108
2SC40Y	108
2SC41	163A
2SC41B	328
2SC41C	328
2SC41F	328
2SC41GN	328
2SC41H	328
2SC41J	328
2SC41M	328
2SC410R	328
2SC41R	328
2SC41TV	163A
2SC41X	328
2SC41Y	328
2SC42	162
2SC42A	162
2SC42B	162
2SC42C	162
2SC42E	162
2SC42F	162
2SC42G	162
2SC42GN	162
2SC42H	162
2SC42J	162
2SC42K	162
2SC42L	162
2SC42M	162
2SC420R	162
2SC42R	162
2SC42X	162
2SC42Y	162
2SC43	162
2SC44	162
2SC45	123AP
2SC45B-GR	123A
2SC45B-O	123A
2SC45B-Y	123A
2SC46	128
2SC46A	128
2SC46B	128
2SC46C	128
2SC46E	128
2SC46F	128
2SC46G	128
2SC46GN	128
2SC46H	128
2SC46J	128
2SC46K	128
2SC46L	128
2SC46M	128
2SC460R	128
2SC46X	128
2SC46Y	128
2SC47	123AP
2SC47A	192
2SC47B	192
2SC47C	192
2SC47D	192
2SC47E	192
2SC47G	192
2SC47GN	192
2SC47H	192
2SC47J	192
2SC47K	192
2SC47L	192
2SC47M	192
2SC470R	192
2SC47R	192
2SC47X	192
2SC47Y	192
2SC48	123
2SC48A	293
2SC48B	293
2SC48C	123AP
2SC48D	293
2SC48E	293
2SC48F	293
2SC48G	293
2SC48GN	293
2SC48H	293
2SC48J	293
2SC48K	293
2SC48L	293
2SC48M	293
2SC480R	293
2SC48R	293
2SC48X	293
2SC48Y	293
2SC49	128
2SC49A	128
2SC49B	128
2SC49C	128
2SC49D	128
2SC49E	128
2SC49F	128
2SC49G	128
2SC49GN	128
2SC49H	128
2SC49J	128
2SC49K	128
2SC49L	128
2SC49M	128
2SC490R	128
2SC49X	128
2SC49Y	128
2SC50	101
2SC50A	101
2SC50B	293
2SC50C	293
2SC50E	293
2SC50F	293
2SC50G	293
2SC50GN	293
2SC50H	293
2SC50J	293
2SC50K	293
2SC50L	293
2SC50M	293
2SC500R	293
2SC50R	293
2SC50X	293
2SC50Y	293
2SC51	128
2SC51A	128
2SC51B	128
2SC51C	128
2SC51D	128
2SC51E	128
2SC51F	128
2SC51G	128
2SC51GN	128
2SC51H	128
2SC51J	128
2SC51K	128
2SC51L	128
2SC51M	128
2SC510R	128
2SC51R	128
2SC51X	128
2SC51Y	128
2SC52	123AP
2SC52A	192
2SC52B	192
2SC52C	192
2SC52D	192
2SC52E	192
2SC52F	192
2SC52G	192
2SC52GN	192
2SC52H	192
2SC52J	192
2SC52K	192
2SC52L	192
2SC52M	192
2SC520R	192
2SC52X	192
2SC52Y	192
2SC53	123AP
2SC53A	192
2SC53B	192
2SC53C	192
2SC53D	192
2SC53E	192
2SC53F	192
2SC53G	192
2SC53GN	192
2SC53H	192
2SC53J	192
2SC53L	192
2SC530R	192
2SC53R	192
2SC53X	192
2SC53Y	192
2SC54	123AP
2SC54A	192
2SC54B	192
2SC54C	192
2SC54D	192
2SC54E	192
2SC54F	192
2SC54G	192
2SC54GN	192
2SC54H	192
2SC54J	192
2SC54K	192
2SC54L	192
2SC54M	192
2SC540R	192
2SC54X	192
2SC54Y	192
2SC55	123AP
2SC55A	229
2SC55B	229
2SC55C	229
2SC55D	229
2SC55E	229
2SC55F	229
2SC55G	229
2SC55GN	229
2SC55H	229
2SC55J	229
2SC55K	229
2SC55L	229
2SC55M	229
2SC550R	229
2SC55R	229
2SC55X	229
2SC55Y	229
2SC56	107
2SC56A	293
2SC56B	293
2SC56C	293
2SC56D	293
2SC56E	293
2SC56F	293
2SC56G	293
2SC56GN	293
2SC56H	293
2SC56J	293
2SC56K	293
2SC56L	293
2SC56M	293
2SC560R	293
2SC56R	293
2SC56X	293
2SC56Y	293
2SC57	192
2SC58	154
2SC58A	154
2SC58AC	154
2SC58B	154
2SC58D	154
2SC58E	154
2SC58F	154
2SC58G	154
2SC58GN	154
2SC58H	154
2SC58J	154
2SC58K	154
2SC58L	154
2SC58M	154
2SC580R	154
2SC58R	154
2SC58X	154
2SC58Y	154
2SC59	128
2SC59A	128
2SC59B	128
2SC59C	128
2SC59D	128
2SC59E	128
2SC59F	128
2SC59G	128
2SC59GN	128
2SC59H	128
2SC59J	128
2SC59K	128
2SC59L	128
2SC59M	128
2SC590R	128
2SC59R	128
2SC59X	128
2SC59Y	128
2SC60	101
2SC61	128
2SC61A	128
2SC61B	128
2SC61C	128
2SC61D	128
2SC61E	128
2SC61F	128
2SC61G	128
2SC61GN	128
2SC61H	128
2SC61J	128
2SC61K	128
2SC61L	128
2SC61M	128
2SC610R	128
2SC61R	128
2SC61Y	128
2SC62	123AP
2SC62A	192
2SC62B	192
2SC62C	192
2SC62D	192
2SC62E	192
2SC62F	192
2SC62G	192
2SC62GN	192
2SC62H	192
2SC62J	192
2SC62L	192
2SC62M	192
2SC620R	192
2SC62R	192
2SC62X	192
2SC62Y	192
2SC63	108
2SC63A	108
2SC63B	108
2SC63D	108
2SC63E	108
2SC63F	108
2SC63G	108
2SC63GN	108
2SC63H	108
2SC63J	108
2SC63K	108
2SC63L	108
2SC63M	108
2SC630R	108
2SC63R	108
2SC63X	108
2SC63Y	108
2SC64	154
2SC64A	154
2SC64B	154
2SC64C	154
2SC64D	154
2SC64E	154
2SC64F	154
2SC64G	154
2SC64GN	154
2SC64H	154
2SC64K	154
2SC64L	154
2SC64M	154
2SC640R	154
2SC64R	154
2SC64X	154
2SC64Y	154
2SC64Y-RST	199
2SC65	154
2SC65-O	154
2SC65-OR	154
2SC65A	154
2SC65B	154
2SC65C	154
2SC65D	154
2SC65E	154
2SC65F	154
2SC65G	154
2SC65GN	154
2SC65H	154
2SC65K	154
2SC65L	154
2SC65M	154
2SC65N	154
2SC650R	154
2SC65R	154
2SC65X	154
2SC65Y	154
2SC65Y(B)	154
2SC65YA	154
2SC65YB	154
2SC65YTV	154
2SC65YTV1	154
2SC66	154
2SC66A	198
2SC66B	198
2SC66C	198
2SC66D	198
2SC66E	198
2SC66EV	198
2SC66F	198
2SC66G	198
2SC66GN	198
2SC66H	198
2SC66J	198
2SC66K	198
2SC66L	198
2SC66M	198
2SC660R	198
2SC66R	198
2SC66X	198
2SC66Y	198
2SC67	123AP
2SC67A	192
2SC67B	192
2SC67C	192
2SC67D	192
2SC67E	192
2SC67F	192
2SC67G	192
2SC67GN	192
2SC67H	192
2SC67J	192
2SC67K	192
2SC67L	192
2SC67M	192
2SC670R	192
2SC67R	192
2SC67X	192
2SC67Y	192
2SC68	123AP
2SC68A	192
2SC68B	192
2SC68C	192
2SC68D	192
2SC68E	192
2SC68F	192
2SC68G	192
2SC68GN	192
2SC68H	192
2SC68J	192
2SC68K	192
2SC68L	192
2SC68M	192
2SC680R	192
2SC68R	192
2SC68X	192
2SC68Y	192
2SC69	128
2SC69A	128
2SC69B	128
2SC69C	128
2SC69D	128
2SC69E	128
2SC69F	128
2SC69G	128
2SC69GN	128
2SC69H	128
2SC69J	128
2SC69K	128
2SC69L	128
2SC69M	128
2SC690R	128
2SC69R	128
2SC69X	128
2SC69Y	128
2SC70	154
2SC70A	198
2SC70B	198
2SC70C	198
2SC70D	198
2SC70E	198
2SC70F	198
2SC70G	198
2SC70GN	198
2SC70H	198
2SC70J	198
2SC70K	198
2SC70L	198
2SC70M	198
2SC700R	198
2SC70R	198
2SC70X	198
2SC70Y	198
2SC71	101
2SC71A	101
2SC71B	101
2SC71C	101
2SC71D	101
2SC71D-3	85
2SC71E	101
2SC71F	101
2SC71G	101
2SC71GN	101
2SC71H	101
2SC71J	101
2SC71M	101
2SC710R	101
2SC71R	101
2SC71X	101
2SC72	101
2SC72A	101
2SC72B	101
2SC72C	101
2SC72D	101
2SC72E	101
2SC72F	101
2SC72G	101
2SC72GN	101
2SC72H	101
2SC72J	101
2SC72K	101
2SC72L	101
2SC72M	101
2SC720R	101
2SC72R	101
2SC72X	101
2SC72Y	101
2SC73	101
2SC73A	101
2SC73B	101
2SC73C	101
2SC73D	101
2SC73E	101
2SC73F	101
2SC73G	101
2SC73GN	101
2SC73H	101
2SC73J	101
2SC73K	101
2SC73L	101
2SC73LBGL	375
2SC73M	101
2SC730R	101
2SC73R	101
2SC73X	101
2SC73Y	101
2SC74	108
2SC74-O	229
2SC74-R	229
2SC74A	229
2SC74B	229
2SC74C	229
2SC74D	229
2SC74E	229
2SC74F	229
2SC74G	229
2SC74GN	229
2SC74H	229
2SC74J	229
2SC74K	229
2SC74L	229
2SC74M	229
2SC74R	229
2SC74X	229
2SC74Y	229
2SC75	101
2SC75A	101
2SC75B	101
2SC75B-1	101
2SC75C	101
2SC75E	101
2SC75F	101
2SC75G	101
2SC75GN	101
2SC75H	101
2SC75J	101
2SC75K	101
2SC75L	101
2SC75M	101
2SC750R	101
2SC75R	101
2SC75X	101
2SC75Y	101
2SC76	101
2SC76A	101
2SC76B	101
2SC76C	101
2SC76D	101
2SC76E	101
2SC76F	101
2SC76G	101
2SC76GN	101
2SC76H	101
2SC76J	101
2SC76K	101
2SC76L	101
2SC76M	101
2SC760R	101
2SC76R	101
2SC76X	101
2SC76Y	101
2SC77	101
2SC77A	101
2SC77B	101
2SC77C	101
2SC77D	101
2SC77F	101
2SC77G	101
2SC77GN	101
2SC77H	101
2SC77J	101
2SC77K	101
2SC77L	101
2SC77M	101
2SC770R	101
2SC77R	101
2SC77X	101
2SC77Y	101
2SC77Z	101
2SC78	101
2SC78A	101
2SC78B	101
2SC78C	101
2SC78D	101
2SC78E	101
2SC78F	101
2SC78G	101
2SC78GN	101
2SC78H	101
2SC78J	101
2SC78K	101
2SC78L	101
2SC78M	101
2SC780R	101
2SC78R	101
2SC78X	101
2SC78Y	101
2SC79	108
2SC79A	229
2SC79B	229
2SC79C	229
2SC79D	229
2SC79E	229
2SC79F	229
2SC79G	229
2SC79GN	229
2SC79H	229
2SC79J	229
2SC79K	229
2SC79L	229
2SC79M	229
2SC790R	229
2SC79R	229
2SC79X	229
2SC79Y	229
2SC80	108
2SC80A	108
2SC80B	108
2SC80C	108
2SC80D	108
2SC80E	108
2SC80F	108
2SC80G	108
2SC80GN	108
2SC80H	108
2SC80J	108
2SC80K	108
2SC80L	108
2SC80M	108
2SC800R	108
2SC80R	108
2SC80X	108
2SC80Y	108
2SC81	293
2SC81A	293
2SC81B	293
2SC81C	293
2SC81D	293
2SC81E	293
2SC81F	293
2SC81G	293
2SC81GN	293
2SC81H	293
2SC81J	293
2SC81K	293
2SC81L	293
2SC81M	293
2SC810R	293
2SC81R	293
2SC82BN	107
2SC82R	107
2SC83	107
2SC84	101
2SC85	103A
2SC85O	103A
2SC86	103A
2SC87	123AP
2SC87A	192
2SC87B	192

PART NUMBER	NTE REPLACEMENT
2SC87C	192
2SC87D	192
2SC87E	192
2SC87F	192
2SC87G	192
2SC87GN	192
2SC87H	192
2SC87J	192
2SC87K	192
2SC87L	192
2SC87M	192
2SC87OR	192
2SC87R	192
2SC87X	192
2SC87Y	192
2SC88	154
2SC88A	154
2SC88B	198
2SC88C	198
2SC88D	198
2SC88E	198
2SC88F	198
2SC88G	198
2SC88GN	198
2SC88H	198
2SC88J	198
2SC88K	198
2SC88L	198
2SC88M	198
2SC88OR	198
2SC88R	198
2SC88X	198
2SC88Y	198
2SC89	101
2SC89A	103A
2SC89B	101
2SC89C	101
2SC89D	101
2SC89E	101
2SC89F	101
2SC89G	101
2SC89GN	101
2SC89H	101
2SC89J	101
2SC89K	101
2SC89L	101
2SC89M	101
2SC89OR	101
2SC89R	101
2SC89X	101
2SC89Y	101
2SC90	101
2SC90A	101
2SC90B	101
2SC90C	101
2SC90D	101
2SC90E	101
2SC90F	101
2SC90G	101
2SC90GN	101
2SC90H	101
2SC90J	101
2SC90K	101
2SC90L	101
2SC90M	101
2SC90OR	101
2SC90R	101
2SC90X	101
2SC90Y	101
2SC91	101
2SC91A	101
2SC91B	101
2SC91C	101
2SC91D	101
2SC91E	101
2SC91F	101
2SC91G	101
2SC91GN	101
2SC91H	101
2SC91J	101
2SC91K	101
2SC91L	101
2SC91M	101
2SC91OR	101
2SC91R	101
2SC91X	101
2SC91Y	101
2SC92	152
2SC93	152
2SC94	152
2SC95	154
2SC95A	198
2SC95B	198
2SC95C	198
2SC95D	198
2SC95E	198
2SC95F	198
2SC95G	198
2SC95GN	198
2SC95H	198
2SC95J	198
2SC95K	198
2SC95L	198
2SC95M	198
2SC95OR	198
2SC95R	198
2SC95X	198
2SC95Y	198
2SC96	123AP
2SC97	128
2SC97A	128
2SC97B	128
2SC97C	128
2SC97D	128
2SC97E	128
2SC97F	128
2SC97G	128
2SC97GN	128
2SC97H	128
2SC97J	128
2SC97K	128
2SC97L	128
2SC97M	128
2SC97OR	128
2SC97R	128
2SC97X	128
2SC97Y	128
2SC98	108
2SC98A	123AP
2SC98B	123AP
2SC98C	123AP
2SC98D	123AP
2SC98E	123AP
2SC98F	123AP
2SC98G	123AP
2SC98GN	123AP
2SC98H	123AP
2SC98J	123AP
2SC98K	123AP
2SC98L	123AP
2SC98M	123AP
2SC98OR	123AP
2SC98R	123AP
2SC98X	123AP
2SC98Y	123AP
2SC99	108
2SC99A	123AP
2SC99B	123AP
2SC99C	123AP
2SC99D	123AP
2SC99E	123AP
2SC99F	123AP
2SC99G	123AP
2SC99GN	123AP
2SC99H	123AP
2SC99J	123AP
2SC99K	123AP
2SC99L	123AP
2SC99M	123AP
2SC99OR	123AP
2SC99R	123AP
2SC99X	123AP
2SC99Y	123AP
2SC100	123AP
2SC100-0Y	123AP
2SC100A	123A
2SC100B	123A
2SC100C	123A
2SC100D	123A
2SC100E	123A
2SC100F	123A
2SC100G	123A
2SC100GN	123A
2SC100J	123A
2SC100L	123A
2SC100M	123A
2SC100OR	123A
2SC100R	123A
2SC100X	123A
2SC100Y	123A
2SC101	124
2SC101A	124
2SC101B	162
2SC101C	162
2SC101D	162
2SC101E	162
2SC101F	162
2SC101G	162
2SC101GN	162
2SC101H	162
2SC101J	162
2SC101K	162
2SC101L	162
2SC101M	162
2SC101OR	162
2SC101R	162
2SC101X	124
2SC101XL	162
2SC101Y	162
2SC102	105
2SC103	123AP
2SC103A	123AP
2SC103B	199
2SC103C	199
2SC103D	199
2SC103E	199
2SC103F	199
2SC103G	199
2SC103GN	199
2SC103H	199
2SC103J	199
2SC103K	199
2SC103L	199
2SC103M	199
2SC103X	199
2SC103Y	199
2SC104	123AP
2SC104A	123AP
2SC104B	199
2SC104C	199
2SC104D	199
2SC104E	199
2SC104F	199
2SC104G	199
2SC104GN	199
2SC104H	199
2SC104J	199
2SC104K	199
2SC104L	199
2SC104M	199
2SC104OR	199
2SC104R	199
2SC104X	199
2SC104Y	199
2SC105	123AP
2SC105B	289A
2SC105OD	94
2SC105ODE	94
2SC105OF	94
2SC106A	175
2SC106B	175
2SC106C	175
2SC106G	175
2SC106GN	175
2SC106H	175
2SC106J	175
2SC106K	175
2SC106L	175
2SC106M	175
2SC106OR	175
2SC106R	175
2SC106X	175
2SC106Y	175
2SC107	152
2SC108	128
2SC108A	128
2SC108A-O	128
2SC108A-R	128
2SC108B	128
2SC108C	128
2SC108D	128
2SC108E	128
2SC108F	128
2SC108G	128
2SC108GN	128
2SC108H	128
2SC108J	128
2SC108K	128
2SC108L	128
2SC108M	128
2SC108OR	128
2SC108R	128
2SC108X	128
2SC108Y	128
2SC109	128
2SC109A	128
2SC109A-O	128
2SC109A-R	128
2SC109A-Y	128
2SC109B	128
2SC109C	128
2SC109D	128
2SC109E	128
2SC109F	128
2SC109G	128
2SC109G1	128
2SC109GN	128
2SC109J	128
2SC109K	128
2SC109L	128
2SC109OR	128
2SC109R	128
2SC109X	128
2SC109Y	128
2SC110	123AP
2SC110A	128
2SC110B	128
2SC110C	128
2SC110D	128
2SC110E	128
2SC110F	128
2SC110G	128
2SC110GN	128
2SC110H	128
2SC110J	128
2SC110K	128
2SC110L	128
2SC110M	128
2SC110OR	128
2SC110R	128
2SC110X	128
2SC110Y	128
2SC111	123AP
2SC111A	128
2SC111B	128
2SC111C	128
2SC111D	128
2SC111E	128
2SC111F	128
2SC111G	128
2SC111GN	128
2SC111H	128
2SC111J	128
2SC111K	128
2SC111L	128
2SC111M	128
2SC111OR	128
2SC111R	128
2SC111X	128
2SC111Y	128
2SC112	128
2SC112A	128
2SC112B	128
2SC112C	128
2SC112D	128
2SC112E	128
2SC112F	128
2SC112G	128
2SC112GN	128
2SC112H	128
2SC112J	128
2SC112K	128
2SC112L	128
2SC112M	128
2SC112OR	128
2SC112R	128
2SC112X	128
2SC112Y	128
2SC113	128
2SC113A	128
2SC113B	128
2SC113C	128
2SC113D	128
2SC113E	128
2SC113F	128
2SC113G	128
2SC113GN	128
2SC113H	128
2SC113J	128
2SC113K	128
2SC113L	128
2SC113M	128
2SC113OR	128
2SC113R	128
2SC113X	128
2SC113Y	128
2SC114	128
2SC114A	128
2SC114B	128
2SC114C	128
2SC114D	128
2SC114E	128
2SC114F	128
2SC114G	128
2SC114GN	128
2SC114H	128
2SC114J	128
2SC114K	128
2SC114L	128
2SC114M	128
2SC114OR	128
2SC114R	128
2SC114X	128
2SC114Y	128
2SC115	128
2SC115-1	293
2SC115-2	293
2SC115-3	293
2SC115-43	293
2SC115A	293
2SC115B	293
2SC115C	293
2SC115D	293
2SC115E	293
2SC115F	293
2SC115G	293
2SC115GN	293
2SC115H	293
2SC115J	293
2SC115K	293
2SC115L	293
2SC115M	293
2SC115OR	293
2SC115R	293
2SC115X	293
2SC115Y	293
2SC116	195A
2SC116-OR	195A
2SC116A	195A
2SC116B	195A
2SC116C	195A
2SC116D	195A
2SC116E	195A
2SC116F	195A
2SC116G	195A
2SC116GN	195A
2SC116H	195A
2SC116J	195A
2SC116K	195A
2SC116L	195A
2SC116M	195A
2SC116OR	195A
2SC116R	195A
2SC116T	195A
2SC116X	195A
2SC116Y	195A
2SC117	128
2SC117A	128
2SC117B	128
2SC117C	128
2SC117D	128
2SC117F	128
2SC117G	128
2SC117GN	128
2SC117H	128
2SC117J	128
2SC117K	128
2SC117L	128
2SC117M	128
2SC117R	128
2SC117X	128
2SC117Y	128
2SC118	128
2SC118A	128
2SC118B	128
2SC118C	128
2SC118D	128
2SC118E	128
2SC118F	128
2SC118G	128
2SC118GN	128
2SC118H	128
2SC118J	128
2SC118L	128
2SC118M	128
2SC118OR	128
2SC118R	128
2SC118X	128
2SC118Y	128
2SC119	128
2SC119A	128
2SC119B	128
2SC119C	128
2SC119D	128
2SC119E	128
2SC119F	128
2SC119G	128
2SC119GN	128
2SC119H	128
2SC119J	128
2SC119K	128
2SC119L	128
2SC119M	128
2SC119OR	128
2SC119R	128
2SC119X	128
2SC119Y	128
2SC120	128
2SC120A	199
2SC120B	199
2SC120C	199
2SC120D	199
2SC120E	199
2SC120F	199
2SC120G	199
2SC120GN	199
2SC120H	199
2SC120J	199
2SC120K	199
2SC120M	199
2SC120R	199
2SC120Y	199
2SC121	128
2SC121A	199
2SC121B	199
2SC121C	199
2SC121D	199
2SC121E	199
2SC121F	199
2SC121G	199
2SC121GN	199
2SC121H	199
2SC121J	199
2SC121L	199
2SC121M	199
2SC121OR	199
2SC121R	199
2SC121X	199
2SC121Y	199
2SC122	128
2SC122A	199
2SC122B	199
2SC122C	199
2SC122D	199
2SC122E	199
2SC122F	199
2SC122G	199
2SC122GN	199
2SC122H	199
2SC122J	199
2SC122K	199
2SC122L	199
2SC122M	199
2SC122OR	199
2SC122R	199
2SC122X	199
2SC122Y	199
2SC123	128
2SC123A	199
2SC123B	199
2SC123C	199
2SC123D	199
2SC123E	199
2SC123F	199
2SC123G	199
2SC123GN	199
2SC123H	199
2SC123J	199
2SC123K	199
2SC123L	199
2SC123M	199
2SC123OR	199
2SC123R	199
2SC123X	199
2SC123Y	199
2SC124	128
2SC124A	199
2SC124B	199
2SC124C	199
2SC124D	199
2SC124E	199
2SC124F	199
2SC124G	199
2SC124GN	199
2SC124H	199
2SC124J	199
2SC124K	199
2SC124L	199
2SC124M	199
2SC124OR	199
2SC124R	199
2SC124X	199
2SC124Y	199
2SC125	128
2SC126	171
2SC127	108
2SC127A	108
2SC127B	108
2SC127C	108
2SC127D	108
2SC127E	108
2SC127F	108
2SC127G	108
2SC127GN	108
2SC127H	108
2SC127J	108
2SC127K	108
2SC127L	108
2SC127M	108
2SC127OR	108
2SC127R	108
2SC127X	108
2SC127Y	108
2SC128	101
2SC128A	101
2SC128B	101
2SC128C	101
2SC128D	101
2SC128E	101
2SC128F	101
2SC128G	101
2SC128GN	101
2SC128H	101
2SC128J	101
2SC128K	101
2SC128L	101
2SC128M	101
2SC128OR	101
2SC128R	101
2SC128X	101
2SC128Y	101
2SC129	101
2SC129A	101
2SC129B	101
2SC129C	101
2SC129D	101
2SC129E	101
2SC129F	101
2SC129GN	101
2SC129H	101
2SC129J	101
2SC129K	101
2SC129L	101
2SC129M	101
2SC129OR	101
2SC129R	101
2SC129X	101
2SC129Y	101
2SC130	128
2SC130A	128
2SC130B	128
2SC130C	128
2SC130D	128
2SC130E	128
2SC130F	128
2SC130GN	128
2SC130H	128
2SC130J	128
2SC130K	128
2SC130L	128
2SC130M	128
2SC130OR	128
2SC130R	128
2SC130X	128
2SC130Y	128
2SC131	123AP
2SC131A	123AP
2SC131B	123AP
2SC131C	123AP
2SC131D	123AP
2SC131E	123AP
2SC131F	123AP
2SC131G	123AP
2SC131GN	123AP
2SC131H	123AP
2SC131J	123AP
2SC131L	123AP
2SC131M	123AP
2SC131OR	123AP
2SC131R	123AP
2SC131T	123AP
2SC131Y	123AP
2SC132	123AP
2SC132A	123AP
2SC132B	123AP
2SC132C	123AP
2SC132D	123AP
2SC132E	123AP
2SC132F	123AP
2SC132G	123AP
2SC132GN	123AP
2SC132H	123AP
2SC132J	123AP
2SC132K	123AP
2SC132L	123AP
2SC132M	123AP
2SC132OR	123AP
2SC132R	123AP
2SC132X	123AP
2SC132Y	123AP
2SC133	123AP
2SC133A	123AP
2SC133C	123AP
2SC133D	123AP
2SC133E	123AP
2SC133F	123AP
2SC133G	123AP
2SC133GN	123AP
2SC133H	123AP
2SC133J	123AP
2SC133K	123AP
2SC133L	123AP
2SC133M	123AP
2SC133OR	123AP
2SC133X	123AP
2SC133Y	123AP
2SC134	123AP
2SC134A	123AP
2SC134B	123AP
2SC134C	123AP
2SC134D	123AP
2SC134E	123AP
2SC134F	123AP
2SC134G	123AP
2SC134GN	123AP
2SC134H	123AP
2SC134J	123AP
2SC134K	123AP
2SC134L	123AP
2SC134M	123AP
2SC134OR	123AP
2SC134R	123AP
2SC134X	123AP
2SC134Y	123AP
2SC135	123AP
2SC135A	123AP
2SC135B	123AP
2SC135C	123AP
2SC135D	123AP
2SC135E	123AP
2SC135F	123AP
2SC135G	123AP
2SC135GN	123AP
2SC135H	123AP
2SC135J	123AP
2SC135L	123AP
2SC135M	123AP
2SC135OR	123AP
2SC135R	123AP
2SC135X	123AP
2SC135Y	123AP
2SC136	123AP
2SC136D	123AP
2SC137	123AP
2SC137-R	289A
2SC137A	123AP
2SC137B	123AP
2SC137C	123AP
2SC137D	123AP
2SC137E	123AP
2SC137F	123AP
2SC137G	123AP
2SC137GN	123AP
2SC137H	123AP
2SC137J	123AP
2SC137K	123AP
2SC137L	123AP
2SC137M	123AP
2SC137OR	123AP
2SC137R	123AP
2SC137X	123AP
2SC137Y	123AP
2SC138	123AP
2SC138A	123AP
2SC138B	192
2SC138C	192
2SC138D	192
2SC138E	192
2SC138F	192
2SC138G	192
2SC138GN	192
2SC138H	192
2SC138J	192
2SC138L	192
2SC138M	192
2SC138OR	192
2SC138R	192
2SC138S	123AP
2SC138X	192
2SC139	123AP
2SC139A	192
2SC139B	192
2SC139C	192
2SC139D	192
2SC139E	192
2SC139F	192
2SC139G	192
2SC139GN	192
2SC139H	192
2SC139J	192
2SC139K	192
2SC139M	192
2SC139OR	192
2SC139R	192
2SC139X	192
2SC139Y	192
2SC140	128
2SC140A	128
2SC140C	128
2SC140D	128
2SC140E	128
2SC140F	128
2SC140G	128
2SC140GN	128
2SC140H	128
2SC140J	128
2SC140K	128
2SC140L	128
2SC140M	128
2SC140OR	128
2SC140R	128
2SC140X	128
2SC140Y	128
2SC141	123AP
2SC142	123AP
2SC143	123AP
2SC144	123AP
2SC144A	123AP

PART NUMBER	NTE REPLACEMENT
2SC145	123AP
2SC146A	123AP
2SC147	128
2SC147A	192
2SC147B	192
2SC147C	192
2SC147D	192
2SC147F	192
2SC147G	192
2SC147GN	192
2SC147H	192
2SC147J	192
2SC147K	192
2SC147L	192
2SC147M	192
2SC147R	192
2SC147X	192
2SC147Y	192
2SC148	108
2SC148A	229
2SC148B	229
2SC148D	229
2SC148E	229
2SC148F	229
2SC148G	229
2SC148GN	229
2SC148H	229
2SC148J	229
2SC148K	229
2SC148L	229
2SC148M	229
2SC148OR	229
2SC148R	229
2SC148X	229
2SC148Y	229
2SC149	123AP
2SC150	128
2SC150-OR	128
2SC150A	128
2SC150B	128
2SC150C	128
2SC150D	128
2SC150E	128
2SC150F	128
2SC150G	128
2SC150GN	128
2SC150H	128
2SC150J	128
2SC150K	128
2SC150L	128
2SC150M	128
2SC150OR	128
2SC150R	128
2SC150T	128
2SC150X	128
2SC150Y	128
2SC151	123AP
2SC151A	293
2SC151B	293
2SC151C	293
2SC151D	293
2SC151E	293
2SC151G	293
2SC151GN	293
2SC151H	293
2SC151J	293
2SC151K	293
2SC151L	293
2SC151M	293
2SC151OR	293
2SC151R	293
2SC151X	293
2SC151Y	293
2SC152	128
2SC152A	128
2SC152B	128
2SC152C	128
2SC152D	128
2SC152E	128
2SC152F	128
2SC152G	128
2SC152GN	128
2SC152H	128
2SC152J	128
2SC152K	128
2SC152L	128
2SC152M	128
2SC152OR	128
2SC152R	128
2SC152X	128
2SC152Y	128
2SC153	123AP
2SC154	154
2SC154(C)	154
2SC154-OR	154
2SC154A	154
2SC154B	154
2SC154C	154
2SC154D	154
2SC154E	154
2SC154F	154
2SC154G	154
2SC154GN	154
2SC154H	154
2SC154J	154
2SC154K	154
2SC154L	154
2SC154M	154
2SC154OR	154
2SC154R	154
2SC154X	154
2SC154Y	154
2SC155	108
2SC155A	108
2SC155B	108
2SC155C	108
2SC155D	108
2SC155E	108
2SC155F	108
2SC155GN	108
2SC155H	108
2SC155J	108
2SC155K	108
2SC155L	108
2SC155M	108
2SC155OR	108
2SC155R	108
2SC155X	108
2SC155Y	108
2SC156	108
2SC156A	108
2SC156B	108
2SC156C	108
2SC156D	108
2SC156E	108
2SC156F	108
2SC156G	108
2SC156GN	108
2SC156H	108
2SC156J	108
2SC156K	108
2SC156L	108
2SC156M	108
2SC156OR	108
2SC156R	108
2SC156X	108
2SC156Y	108
2SC157	123
2SC157A	293
2SC157B	293
2SC157C	293
2SC157D	293
2SC157E	293
2SC157F	293
2SC157G	293
2SC157GN	293
2SC157J	293
2SC157K	293
2SC157L	293
2SC157M	293
2SC157OR	293
2SC157R	293
2SC157Y	293
2SC158	123
2SC158A	293
2SC158B	293
2SC158C	293
2SC158D	293
2SC158E	293
2SC158F	293
2SC158G	293
2SC158GN	293
2SC158H	293
2SC158J	293
2SC158K	293
2SC158L	293
2SC158M	293
2SC158OR	293
2SC158R	293
2SC158X	293
2SC158Y	293
2SC159	123AP
2SC159A	229
2SC159B	229
2SC159C	229
2SC159D	229
2SC159E	229
2SC159F	229
2SC159GN	229
2SC159H	229
2SC159J	229
2SC159K	229
2SC159L	229
2SC159M	229
2SC159OR	229
2SC159R	229
2SC159X	229
2SC159Y	229
2SC160	123AP
2SC160A	229
2SC160B	229
2SC160C	229
2SC160D	229
2SC160E	229
2SC160F	229
2SC160G	229
2SC160GN	229
2SC160H	229
2SC160J	229
2SC160K	229
2SC160L	229
2SC160M	229
2SC160OR	229
2SC160R	229
2SC160X	229
2SC160Y	229
2SC162	123AP
2SC163	195A
2SC163A	128
2SC163B	128
2SC163C	128
2SC163D	128
2SC163E	128
2SC163F	128
2SC163G	128
2SC163GN	128
2SC163H	128
2SC163J	128
2SC163K	128
2SC163L	128
2SC163M	128
2SC1630R	128
2SC163R	128
2SC163X	128
2SC163Y	128
2SC164	293
2SC164A	293
2SC164B	293
2SC164C	293
2SC164D	293
2SC164E	293
2SC164F	293
2SC164G	293
2SC164GN	293
2SC164H	293
2SC164J	293
2SC164K	293
2SC164L	293
2SC1640R	293
2SC164R	293
2SC164X	293
2SC164Y	293
2SC165	192
2SC166	123AP
2SC166A	161
2SC166B	161
2SC166C	161
2SC166D	161
2SC166E	161
2SC166F	161
2SC166G	161
2SC166GN	161
2SC166H	161
2SC166J	161
2SC166K	161
2SC166L	161
2SC166M	161
2SC166OR	161
2SC166R	161
2SC166X	161
2SC166Y	161
2SC167	123AP
2SC167A	161
2SC167B	161
2SC167C	161
2SC167D	161
2SC167E	161
2SC167F	161
2SC167G	161
2SC167GN	161
2SC167H	161
2SC167K	161
2SC167L	161
2SC167M	161
2SC167OR	161
2SC167X	161
2SC167Y	161
2SC168	123AP
2SC169	123A
2SC170	108
2SC170A	108
2SC170B	108
2SC170C	108
2SC170D	108
2SC170E	108
2SC170F	108
2SC170G	108
2SC170GN	108
2SC170H	108
2SC170J	108
2SC170K	108
2SC170L	108
2SC170M	108
2SC170OR	108
2SC170Q	289
2SC170R	123A
2SC170X	108
2SC170Y	108
2SC171	107
2SC171A	108
2SC171B	108
2SC171C	108
2SC171D	108
2SC171E	108
2SC171F	108
2SC171G	108
2SC171GN	108
2SC171H	108
2SC171J	108
2SC171K	108
2SC171L	108
2SC171M	108
2SC171OR	108
2SC171R	108
2SC171X	108
2SC171Y	108
2SC172	108
2SC172A	108
2SC172B	108
2SC172C	108
2SC172D	108
2SC172E	108
2SC172F	108
2SC172G	108
2SC172GN	108
2SC172H	108
2SC172J	108
2SC172K	108
2SC172L	108
2SC172M	108
2SC172OR	108
2SC172R	108
2SC172Y	108
2SC173	101
2SC173A	101
2SC173B	101
2SC173C	101
2SC173D	101
2SC173E	101
2SC173F	101
2SC173G	101
2SC173GN	101
2SC173H	101
2SC173J	101
2SC173K	101
2SC173L	101
2SC173M	101
2SC173OR	101
2SC173R	101
2SC173X	101
2SC173Y	101
2SC174	107
2SC174A	107
2SC174B	108
2SC174C	108
2SC174D	108
2SC174E	108
2SC174F	108
2SC174G	108
2SC174GN	108
2SC174H	108
2SC174J	108
2SC174K	108
2SC174L	108
2SC174M	108
2SC1740Q	85
2SC1740R	85
2SC1740SQ	85
2SC1740SR	85
2SC174R	108
2SC174X	108
2SC174Y	108
2SC175	101
2SC175A	101
2SC175B	101
2SC175BL	101
2SC175C	101
2SC175D	101
2SC175E	101
2SC175F	101
2SC175G	101
2SC175GN	101
2SC175H	101
2SC175J	101
2SC175K	101
2SC175L	101
2SC175M	101
2SC175OR	101
2SC175R	101
2SC175X	101
2SC175Y	101
2SC176	101
2SC176A	101
2SC176B	101
2SC176C	101
2SC176D	101
2SC176E	101
2SC176F	101
2SC176G	101
2SC176GN	101
2SC176H	101
2SC176J	101
2SC176K	101
2SC176L	101
2SC176OR	101
2SC176R	101
2SC176X	101
2SC176Y	101
2SC177	101
2SC177A	101
2SC177B	101
2SC177C	101
2SC177D	101
2SC177E	101
2SC177F	101
2SC177G	101
2SC177GN	101
2SC177H	101
2SC177J	101
2SC177K	101
2SC177L	101
2SC177M	101
2SC177OR	101
2SC177R	101
2SC177X	101
2SC177Y	101
2SC178	101
2SC178A	101
2SC178B	101
2SC178C	101
2SC178D	101
2SC178E	101
2SC178F	101
2SC178G	101
2SC178H	101
2SC178J	101
2SC178K	101
2SC178L	101
2SC178M	101
2SC178OR	101
2SC178R	101
2SC178X	101
2SC178Y	101
2SC179	103A
2SC179A	103
2SC179B	103
2SC179C	103
2SC179D	103
2SC179E	103
2SC179F	103
2SC179G	103
2SC179GN	103
2SC179H	103
2SC179J	103
2SC179K	103
2SC179L	103
2SC179M	103
2SC179OR	103
2SC179R	103
2SC179X	103
2SC179Y	103
2SC180	103A
2SC180A	103
2SC180B	103
2SC180C	103
2SC180D	103
2SC180E	103
2SC180F	103
2SC180G	103
2SC180GN	103
2SC180H	103
2SC180J	103
2SC180K	103
2SC180L	103
2SC180M	103
2SC180OR	103
2SC180R	103
2SC180X	103
2SC180Y	103
2SC181	103A
2SC181A	103
2SC181B	103
2SC181C	103
2SC181D	103
2SC181E	103
2SC181F	103
2SC181G	103
2SC181GN	103
2SC181H	103
2SC181J	103
2SC181L	103
2SC181M	103
2SC181OR	103
2SC181R	103
2SC181X	103
2SC181Y	103
2SC182	313
2SC182(Q)	313
2SC182(V)	313
2SC182A	313
2SC182B	313
2SC182C	313
2SC182D	313
2SC182E	313
2SC182F	313
2SC182G	313
2SC182GN	313
2SC182H	313
2SC182J	313
2SC182K	313
2SC182L	313
2SC182M	313
2SC182Q	313
2SC182R	313
2SC182V	313
2SC182X	313
2SC182Y	313
2SC183	313
2SC183(P)	313
2SC183(Q)(R)	313
2SC183(R)	313
2SC183-1	313
2SC183-OR	313
2SC183A	313
2SC183AP	313
2SC183B	313
2SC183BK	313
2SC183C	313
2SC183D	313
2SC183E	313
2SC183F	313
2SC183G	313
2SC183GN	313
2SC183H	313
2SC183J	313
2SC183K	313
2SC183L	313
2SC183M	313
2SC183OR	313
2SC183P	313
2SC183Q	313
2SC183R	313
2SC183S	313
2SC183W	313
2SC183X	313
2SC183Y	313
2SC184	313
2SC184(R)	313
2SC184-OR	313
2SC184A	313
2SC184AP	313
2SC184B	313
2SC184BK	313
2SC184C	313
2SC184D	313
2SC184E	313
2SC184F	313
2SC184G	313
2SC184GN	313
2SC184H	313
2SC184J	313
2SC184K	313
2SC184L	313
2SC184M	313
2SC184OR	313
2SC184P	313
2SC184Q	313
2SC184R	313
2SC184X	313
2SC184Y	313
2SC185	313
2SC185A	313
2SC185B	108
2SC185C	108
2SC185E	108
2SC185F	108
2SC185G	108
2SC185GN	108
2SC185H	108
2SC185J	313
2SC185K	108
2SC185L	108
2SC185M	313
2SC185OR	108
2SC185Q	313
2SC185R	313
2SC185V	313
2SC185X	108
2SC185Y	108
2SC186	107
2SC186A	108
2SC186B	108
2SC186C	108
2SC186D	108
2SC186E	108
2SC186F	108
2SC186G	108
2SC186GN	108
2SC186H	108
2SC186J	108
2SC186K	108
2SC186L	108
2SC186M	108
2SC186OR	108
2SC186R	108
2SC186X	108
2SC186Y	108
2SC187	107
2SC187(I)	107
2SC187-OR	107
2SC187A	107
2SC187B	107
2SC187C	107
2SC187D	107
2SC187E	107
2SC187F	107
2SC187G	107
2SC187H	107
2SC187I	107
2SC187J	107
2SC187K	107
2SC187L	107
2SC187M	107
2SC187OR	107
2SC187R	107
2SC187X	107
2SC187Y	107
2SC188	128
2SC188A	128
2SC188AB	128
2SC188B	128
2SC188C	128
2SC188D	128
2SC188E	128
2SC188F	128
2SC188G	128
2SC188GN	128
2SC188J	128
2SC188K	128
2SC188L	128
2SC188M	128
2SC188OR	128
2SC188R	128
2SC188X	128
2SC188Y	128
2SC189	128
2SC189A	128
2SC189B	128
2SC189C	128
2SC189D	128
2SC189DAE	90
2SC189E	128
2SC189F	128
2SC189G	128
2SC189GN	128
2SC189H	128
2SC189J	128
2SC189K	128
2SC189L	128
2SC189M	128
2SC189OR	128
2SC189R	128
2SC189X	128
2SC189Y	128
2SC190	128
2SC190A	128
2SC190B	128
2SC190C	128
2SC190D	128
2SC190E	128
2SC190F	128
2SC190GN	128
2SC190H	128
2SC190J	128
2SC190K	128
2SC190L	128
2SC190M	128
2SC190OR	128
2SC190R	128
2SC190X	128
2SC190Y	128
2SC191	123AP
2SC191A	199
2SC191B	199
2SC191C	199
2SC191D	199
2SC191E	199
2SC191F	199
2SC191G	199
2SC191GN	199
2SC191H	199
2SC191J	199
2SC191K	199
2SC191L	199
2SC191M	199
2SC191OR	199
2SC191R	199
2SC191X	199
2SC191Y	199
2SC192	123AP
2SC192A	199
2SC192B	199
2SC192C	199
2SC192D	199
2SC192E	199
2SC192F	199
2SC192G	199
2SC192GN	199
2SC192H	199
2SC192J	199
2SC192K	199
2SC192L	199
2SC192M	199
2SC192MK	199
2SC192OR	199
2SC192R	199
2SC192X	199
2SC192Y	199
2SC193	123AP
2SC193A	199
2SC193B	199
2SC193C	199
2SC193D	199
2SC193E	199
2SC193F	199
2SC193G	199
2SC193GL	199
2SC193GN	199
2SC193H	199
2SC193J	199
2SC193K	199
2SC193L	199
2SC193M	199
2SC193OR	199
2SC193R	199
2SC193X	199
2SC194	123AP
2SC194A	199
2SC194B	199
2SC194C	199
2SC194D	199
2SC194E	199
2SC194F	199
2SC194G	199
2SC194GN	199
2SC194H	199
2SC194J	199
2SC194K	199
2SC194L	199
2SC194M	199
2SC194OR	199
2SC194X	199
2SC194Y	199
2SC195	123AP
2SC195A	199
2SC195B	199
2SC195C	199
2SC195D	199
2SC195E	199
2SC195F	199
2SC195G	199
2SC195GN	199
2SC195H	199
2SC195J	199
2SC195K	199
2SC195L	199
2SC195M	199
2SC195OR	199
2SC195R	199
2SC195X	199
2SC195Y	199
2SC196	123AP
2SC196A	199
2SC196B	199
2SC196C	199
2SC196D	199
2SC196E	199
2SC196F	199
2SC196G	199
2SC196GN	199
2SC196H	199
2SC196J	199
2SC196K	199
2SC196L	199
2SC196M	199
2SC196OR	199
2SC196R	199
2SC196X	199

PART NUMBER	NTE REPLACEMENT
2SC196Y	199
2SC197	123AP
2SC197A	199
2SC197B	199
2SC197C	199
2SC197D	199
2SC197E	199
2SC197F	199
2SC197G	199
2SC197GN	199
2SC197H	199
2SC197J	199
2SC197K	199
2SC197L	199
2SC197M	199
2SC197OR	199
2SC197R	199
2SC197X	199
2SC197Y	199
2SC198	130
2SC198H	130
2SC198O	162
2SC198R	162
2SC198S	130
2SC199	108
2SC199A	123AP
2SC199B	123AP
2SC199C	123AP
2SC199D	123AP
2SC199E	123AP
2SC199F	123AP
2SC199G	123AP
2SC199GN	123AP
2SC199H	123AP
2SC199J	123AP
2SC199K	123AP
2SC199L	123AP
2SC199M	123AP
2SC199OR	123AP
2SC199R	123AP
2SC199X	123AP
2SC199Y	123AP
2SC200	123AP
2SC200A	192
2SC200B	192
2SC200C	192
2SC200D	192
2SC200E	192
2SC200F	192
2SC200G	192
2SC200GN	192
2SC200H	192
2SC200J	192
2SC200K	192
2SC200L	192
2SC200M	192
2SC2000R	192
2SC200R	192
2SC200X	192
2SC200Y	192
2SC201	123AP
2SC201A	192
2SC201B	192
2SC201C	192
2SC201D	192
2SC201E	192
2SC201F	192
2SC201G	192
2SC201GN	192
2SC201H	192
2SC201J	192
2SC201K	192
2SC201L	192
2SC201M	192
2SC201R	192
2SC201X	192
2SC201Y	192
2SC202	123AP
2SC202A	192
2SC202B	192
2SC202C	192
2SC202D	192
2SC202E	192
2SC202F	192
2SC202G	192
2SC202GN	192
2SC202H	192
2SC202J	192
2SC202K	192
2SC202L	192
2SC202M	192
2SC202OR	192
2SC202R	192
2SC202X	192
2SC202Y	192
2SC203	123AP
2SC203A	192
2SC203B	192
2SC203C	192
2SC203D	192
2SC203E	192
2SC203F	192
2SC203G	192
2SC203GN	192
2SC203H	192
2SC203J	192
2SC203K	192
2SC203L	192
2SC203M	192
2SC203OR	192
2SC203R	192
2SC203X	192
2SC203Y	192
2SC204	123AP
2SC204A	192
2SC204B	192
2SC204C	192
2SC204D	192
2SC204E	192
2SC204F	192
2SC204G	192
2SC204GN	192
2SC204H	192
2SC204J	192
2SC204K	192
2SC204L	192
2SC204M	192
2SC204OR	192
2SC204R	192
2SC204X	192
2SC204Y	192
2SC205	123AP
2SC205A	192
2SC205B	192
2SC205C	192
2SC205D	192
2SC205F	192
2SC205G	192
2SC205GN	192
2SC205H	192
2SC205J	192
2SC205K	192
2SC205L	192
2SC205M	192
2SC205OR	192
2SC205R	192
2SC205X	192
2SC205Y	192
2SC206	108
2SC206-0R	108
2SC206A	108
2SC206B	108
2SC206C	108
2SC206D	108
2SC206E	108
2SC206G	108
2SC206GN	108
2SC206H	108
2SC206J	108
2SC206K	108
2SC206L	108
2SC206M	108
2SC206OR	108
2SC206R	108
2SC206RED	108
2SC206WHITE	108
2SC206X	108
2SC206Y	108
2SC208	128
2SC208A	128
2SC208B	128
2SC208C	128
2SC208D	128
2SC208E	128
2SC208F	128
2SC208G	128
2SC208GN	128
2SC208H	128
2SC208J	128
2SC208K	128
2SC208L	128
2SC208M	128
2SC208OR	128
2SC208R	128
2SC208X	128
2SC208Y	128
2SC210	128
2SC210A	128
2SC210B	128
2SC210C	128
2SC210D	128
2SC210E	128
2SC210F	128
2SC210G	128
2SC210GN	128
2SC210H	128
2SC210J	128
2SC210K	128
2SC210L	128
2SC210M	128
2SC210OR	128
2SC210R	128
2SC210X	128
2SC210Y	128
2SC211	128
2SC211A	123AP
2SC211B	123AP
2SC211C	123AP
2SC211D	123AP
2SC211F	123AP
2SC211G	123AP
2SC211GN	123AP
2SC211H	123AP
2SC211J	123AP
2SC211K	123AP
2SC211L	123AP
2SC211M	123AP
2SC211OR	123AP
2SC211R	123AP
2SC211X	123AP
2SC211Y	123AP
2SC212	194
2SC212A	123AP
2SC212B	123AP
2SC212C	123AP
2SC212D	123AP
2SC212E	123AP
2SC212F	123AP
2SC212G	123AP
2SC212GN	123AP
2SC212H	123AP
2SC212J	123AP
2SC212K	123AP
2SC212L	123AP
2SC212M	123AP
2SC212OR	123AP
2SC212R	123AP
2SC212X	123AP
2SC212Y	123AP
2SC213	128
2SC213A	128
2SC213B	128
2SC213C	128
2SC213D	128
2SC213E	128
2SC213F	128
2SC213G	128
2SC213GN	128
2SC213H	128
2SC213J	128
2SC213K	128
2SC213L	128
2SC213M	128
2SC213OR	128
2SC213R	128
2SC213X	128
2SC213Y	128
2SC214	128
2SC214A	128
2SC214B	128
2SC214C	128
2SC214D	128
2SC214E	128
2SC214F	128
2SC214G	128
2SC214GN	128
2SC214H	128
2SC214J	128
2SC214K	128
2SC214L	128
2SC214M	128
2SC214OR	128
2SC214X	128
2SC214Y	128
2SC215	128
2SC215A	128
2SC215B	128
2SC215C	128
2SC215E	128
2SC215F	128
2SC215G	128
2SC215GN	128
2SC215H	128
2SC215J	128
2SC215K	128
2SC215L	128
2SC215M	128
2SC215OR	128
2SC215R	128
2SC215X	128
2SC215Y	128
2SC216	128
2SC216A	128
2SC216B	128
2SC216C	128
2SC216D	128
2SC216E	128
2SC216F	128
2SC216G	128
2SC216GN	128
2SC216H	128
2SC216J	128
2SC216K	128
2SC216L	128
2SC216M	128
2SC216OR	128
2SC216R	128
2SC216X	128
2SC216Y	128
2SC217	128
2SC217A	128
2SC217B	128
2SC217C	128
2SC217D	128
2SC217E	128
2SC217F	128
2SC217G	128
2SC217GN	128
2SC217H	128
2SC217J	128
2SC217K	128
2SC217L	128
2SC217M	128
2SC217OR	128
2SC217R	128
2SC217X	128
2SC217Y	128
2SC218	123AP
2SC218A	123AP
2SC218B	128
2SC218C	128
2SC218D	128
2SC218E	128
2SC218F	128
2SC218G	128
2SC218GN	128
2SC218H	128
2SC218J	128
2SC218L	128
2SC218M	128
2SC218OR	128
2SC218R	128
2SC218X	128
2SC218Y	128
2SC220	128
2SC220A	128
2SC220B	128
2SC220C	128
2SC220D	128
2SC220E	128
2SC220F	128
2SC220G	128
2SC220GN	128
2SC220H	128
2SC220K	128
2SC220L	128
2SC220M	128
2SC220OR	128
2SC220R	128
2SC220X	128
2SC220Y	128
2SC221	128
2SC221A	128
2SC221B	128
2SC221C	128
2SC221D	128
2SC221E	128
2SC221F	128
2SC221G	128
2SC221GN	128
2SC221H	128
2SC221J	128
2SC221K	128
2SC221L	128
2SC221M	128
2SC221OR	128
2SC221R	128
2SC221X	128
2SC221Y	128
2SC222	128
2SC222A	128
2SC222B	128
2SC222C	128
2SC222D	128
2SC222E	128
2SC222F	128
2SC222G	128
2SC222GN	128
2SC222H	128
2SC222J	128
2SC222L	128
2SC222M	128
2SC222OR	128
2SC222R	128
2SC222X	128
2SC222Y	128
2SC223	128
2SC223A	186
2SC223B	186
2SC223C	186
2SC223D	186
2SC223E	186
2SC223F	186
2SC223G	186
2SC223GN	186
2SC223H	186
2SC223J	186
2SC223L	186
2SC223M	186
2SC223OR	186
2SC223R	186
2SC223X	186
2SC223Y	186
2SC224	128
2SC224A	186
2SC224B	186
2SC224C	186
2SC224D	186
2SC224E	186
2SC224F	186
2SC224G	186
2SC224GN	186
2SC224H	186
2SC224J	186
2SC224K	186
2SC224L	186
2SC224M	186
2SC224OR	186
2SC224R	186
2SC224X	186
2SC224Y	186
2SC225	128
2SC225A	186
2SC225B	186
2SC225C	186
2SC225D	186
2SC225E	186
2SC225F	186
2SC225G	186
2SC225GN	186
2SC225H	186
2SC225J	186
2SC225L	186
2SC225M	186
2SC225OR	186
2SC225R	186
2SC225X	186
2SC225Y	186
2SC226	128
2SC226A	293
2SC226B	293
2SC226C	293
2SC226D	293
2SC226E	293
2SC226F	293
2SC226G	293
2SC226GN	293
2SC226H	293
2SC226J	293
2SC226K	293
2SC226L	293
2SC226M	293
2SC226OR	293
2SC226R	293
2SC226X	293
2SC226Y	293
2SC227	128
2SC227A	293
2SC227B	293
2SC227C	293
2SC227D	293
2SC227E	293
2SC227F	293
2SC227G	293
2SC227GN	293
2SC227H	293
2SC227IM	399
2SC227J	293
2SC227K	293
2SC227L	293
2SC227M	293
2SC227OR	293
2SC227R	293
2SC227X	293
2SC227Y	293
2SC228	128
2SC228A	293
2SC228B	293
2SC228C	293
2SC228D	293
2SC228E	293
2SC228F	293
2SC228G	293
2SC228GN	293
2SC228H	293
2SC228J	293
2SC228K	293
2SC228L	293
2SC228M	293
2SC228OR	293
2SC228R	293
2SC228X	293
2SC228Y	293
2SC229	128
2SC229A	186
2SC229B	186
2SC229C	186
2SC229D	186
2SC229E	186
2SC229F	186
2SC229G	186
2SC229GN	186
2SC229H	186
2SC229J	186
2SC229K	186
2SC229L	186
2SC229M	186
2SC229OR	186
2SC229R	186
2SC229X	186
2SC229Y	186
2SC230	123AP
2SC230A	192
2SC230B	192
2SC230C	192
2SC230D	192
2SC230E	192
2SC230F	192
2SC230G	192
2SC230GN	192
2SC230H	192
2SC230J	192
2SC230K	192
2SC230L	192
2SC230M	192
2SC230OR	192
2SC230R	192
2SC230X	192
2SC230Y	192
2SC231	128
2SC231A	293
2SC231B	293
2SC231C	293
2SC231D	293
2SC231E	293
2SC231F	293
2SC231G	293
2SC231GN	293
2SC231H	293
2SC231J	293
2SC231K	293
2SC231L	293
2SC231M	293
2SC231OR	293
2SC231R	293
2SC231X	293
2SC231Y	293
2SC232	128
2SC232A	293
2SC232B	293
2SC232C	293
2SC232D	293
2SC232E	293
2SC232F	293
2SC232G	293
2SC232GN	293
2SC232H	293
2SC232J	293
2SC232K	293
2SC232L	293
2SC232M	293
2SC232OR	293
2SC232R	293
2SC232X	293
2SC232Y	293
2SC233	128
2SC233A	293
2SC233B	293
2SC233C	293
2SC233D	293
2SC233F	293
2SC233G	293
2SC233GN	293
2SC233H	293
2SC233J	293
2SC233L	293
2SC233M	293
2SC233OR	293
2SC233R	293
2SC233X	293
2SC233Y	293
2SC234	152
2SC234A	152
2SC234B	152
2SC234C	152
2SC234D	152
2SC234E	152
2SC234F	152
2SC234G	152
2SC234GN	152
2SC234H	152
2SC234J	152
2SC234K	152
2SC234L	152
2SC234M	152
2SC234OR	152
2SC234R	152
2SC234X	152
2SC234Y	152
2SC235	293
2SC235(0)	190
2SC235-O	293
2SC235A	128
2SC235B	128
2SC235C	128
2SC235D	128
2SC235E	128
2SC235F	128
2SC235G	128
2SC235GN	128
2SC235H	128
2SC235J	128
2SC235K	128
2SC235L	128
2SC235M	128
2SC235OR	128
2SC235R	128
2SC235X	128
2SC235Y	128
2SC236	128
2SC236A	128
2SC236B	128
2SC236C	128
2SC236D	128
2SC236E	128
2SC236F	128
2SC236G	128
2SC236GN	128
2SC236H	128
2SC236J	128
2SC236K	128
2SC236L	128
2SC236M	128
2SC236OR	128
2SC236R	128
2SC236X	128
2SC236Y	128
2SC237	123AP
2SC237A	123AP
2SC237B	123AP
2SC237C	123AP
2SC237D	123AP
2SC237E	123AP
2SC237F	123AP
2SC237G	123AP
2SC237GN	123AP
2SC237H	123AP
2SC237J	123AP
2SC237K	123AP
2SC237L	123AP
2SC237M	123AP
2SC237OR	123AP
2SC237R	123AP
2SC237X	123AP
2SC237Y	123AP
2SC238	128
2SC238A	128
2SC238B	128
2SC238C	128
2SC238D	128
2SC238E	128
2SC238F	128
2SC238G	128
2SC238GN	128
2SC238H	128
2SC238J	128
2SC238K	128
2SC238L	128
2SC238M	128
2SC238OR	128
2SC238R	128
2SC238X	128
2SC238Y	128
2SC239	123AP
2SC239A	123AP
2SC239B	123AP
2SC239C	123AP
2SC239D	123AP
2SC239E	123AP
2SC239F	123AP
2SC239G	123AP
2SC239GN	123AP
2SC239H	123AP
2SC239J	123AP
2SC239K	123AP
2SC239L	123AP
2SC239M	123AP
2SC239OR	123AP
2SC239R	123AP
2SC239X	123AP
2SC239Y	123AP
2SC240	162
2SC240A	181
2SC240B	181
2SC240C	181
2SC240D	181
2SC240E	181
2SC240F	181
2SC240G	181
2SC240GN	181
2SC240H	181
2SC240J	181
2SC240K	181
2SC240L	181
2SC240M	181
2SC240OR	181
2SC240R	181
2SC240X	181
2SC240Y	181
2SC241	162
2SC241A	181
2SC241B	181
2SC241C	181
2SC241D	181
2SC241E	181
2SC241F	181
2SC241G	181
2SC241GN	181
2SC241H	181
2SC241K	181
2SC241L	181
2SC241M	181
2SC241OR	181
2SC241R	181
2SC241X	181
2SC241Y	181
2SC242	162
2SC242A	181
2SC242B	181
2SC242C	181
2SC242D	181
2SC242E	181
2SC242F	181
2SC242G	181
2SC242GN	181
2SC242H	181
2SC242J	181
2SC242K	181
2SC242L	181
2SC242M	181
2SC242OR	181
2SC242R	181
2SC242X	181
2SC242Y	181
2SC243	162
2SC244	130
2SC244A	181
2SC244B	181
2SC244C	181
2SC244D	181
2SC244E	181
2SC244F	181
2SC244G	181
2SC244GN	181
2SC244J	181
2SC244K	181
2SC244L	181
2SC244M	181
2SC244OR	181
2SC244R	181
2SC244X	181
2SC244Y	181
2SC245	162
2SC245BY	85
2SC246	162
2SC247	128
2SC247A	128
2SC247B	128
2SC247C	128
2SC247D	128
2SC247E	128
2SC247F	128
2SC247G	128
2SC247GN	128
2SC247H	128
2SC247J	128
2SC247L	128
2SC247M	128
2SC247OR	128
2SC247R	128
2SC247X	128
2SC247Y	128
2SC248	128
2SC248A	128
2SC248B	128
2SC248C	128
2SC248D	128
2SC248E	128

PART NUMBER	NTE REPLACEMENT
2SC248F	128
2SC248G	128
2SC248J	128
2SC248K	128
2SC248L	128
2SC248M	128
2SC248OR	128
2SC248R	128
2SC248X	128
2SC248Y	128
2SC249	128
2SC249A	123AP
2SC249B	123AP
2SC249C	123AP
2SC249D	123AP
2SC249E	123AP
2SC249F	123AP
2SC249G	123AP
2SC249GN	123AP
2SC249H	123AP
2SC249J	123AP
2SC249K	123AP
2SC249L	123AP
2SC249M	123AP
2SC249OR	123AP
2SC249R	123AP
2SC249X	123AP
2SC249Y	123AP
2SC250	161
2SC250A	108
2SC250B	108
2SC250C	108
2SC250D	108
2SC250E	108
2SC250F	108
2SC250G	108
2SC250GN	108
2SC250H	108
2SC250J	108
2SC250K	108
2SC250L	108
2SC250M	108
2SC250OR	108
2SC250R	108
2SC250X	108
2SC250Y	108
2SC251	161
2SC251A	161
2SC251B	108
2SC251C	108
2SC251D	108
2SC251E	108
2SC251F	108
2SC251G	108
2SC251GN	108
2SC251H	108
2SC251J	108
2SC251K	108
2SC251L	108
2SC251M	108
2SC251OR	108
2SC251R	108
2SC251X	108
2SC251Y	108
2SC252	161
2SC252A	108
2SC252B	108
2SC252C	108
2SC252D	108
2SC252E	108
2SC252F	108
2SC252G	108
2SC252GN	108
2SC252H	108
2SC252J	108
2SC252K	108
2SC252L	108
2SC252M	108
2SC252OR	108
2SC252R	108
2SC252X	108
2SC252Y	108
2SC253	316
2SC253A	108
2SC253B	108
2SC253C	108
2SC253D	108
2SC253E	108
2SC253F	108
2SC253G	108
2SC253GN	108
2SC253H	108
2SC253J	108
2SC253K	108
2SC253L	108
2SC253M	108
2SC253OR	108
2SC253R	108
2SC253RS	316
2SC253X	108
2SC253Y	108
2SC254	175
2SC255	128
2SC256	128
2SC257	322
2SC258	190
2SC259	190
2SC260	192
2SC261	192
2SC261O5	399
2SC261OK	287
2SC262	192
2SC263A	108
2SC263B	108
2SC263C	108
2SC263D	108
2SC263E	108
2SC263F	108
2SC263G	108
2SC263GN	108
2SC263H	108
2SC263J	108
2SC263K	108
2SC263L	108
2SC263M	108
2SC263OR	108
2SC263R	108
2SC263X	108
2SC263Y	108
2SC265	123AP
2SC266	107
2SC266A	108
2SC266B	108
2SC266C	108
2SC266D	108
2SC266E	108
2SC266F	108
2SC266G	108
2SC266GN	108
2SC266H	108
2SC266J	108
2SC266K	108
2SC266L	108
2SC266M	108
2SC266OR	108
2SC266R	108
2SC266X	108
2SC266Y	108
2SC267	123AP
2SC267A	123AP
2SC267B	192
2SC267C	192
2SC267D	192
2SC267E	192
2SC267F	192
2SC267G	192
2SC267GN	192
2SC267H	192
2SC267J	192
2SC267K	192
2SC267L	192
2SC267M	192
2SC267OR	192
2SC267R	192
2SC267X	192
2SC267Y	192
2SC268	128
2SC268-OR	128
2SC268A	128
2SC268B	128
2SC268C	128
2SC268D	128
2SC268E	128
2SC268F	128
2SC268G	128
2SC268GN	128
2SC268H	128
2SC268J	128
2SC268K	128
2SC268L	128
2SC268M	128
2SC268OR	128
2SC268R	128
2SC268X	128
2SC268Y	128
2SC269	108
2SC269A	108
2SC269B	108
2SC269C	108
2SC269D	108
2SC269E	108
2SC269F	108
2SC269G	108
2SC269GN	108
2SC269H	108
2SC269J	108
2SC269K	108
2SC269L	108
2SC269M	108
2SC269OR	108
2SC269R	108
2SC269X	108
2SC269Y	108
2SC270	162
2SC271	108
2SC271A	108
2SC271B	108
2SC271C	108
2SC271D	108
2SC271E	108
2SC271F	108
2SC271G	108
2SC271GN	108
2SC271H	108
2SC271J	108
2SC271K	108
2SC271L	108
2SC271M	108
2SC271OR	108
2SC271R	108
2SC271X	108
2SC271Y	108
2SC272	108
2SC272A	108
2SC272B	108
2SC272C	108
2SC272D	108
2SC272E	108
2SC272F	108
2SC272G	108
2SC272GN	108
2SC272H	108
2SC272J	108
2SC272K	108
2SC272L	108
2SC272M	108
2SC272OR	108
2SC272R	108
2SC272X	108
2SC272Y	108
2SC273	154
2SC277C	103A
2SC278-OR	313
2SC280	199
2SC280AO	123AP
2SC281	199
2SC281(B)	199
2SC281-OR	199
2SC281A	199
2SC281B	199
2SC281BL	199
2SC281C	199
2SC281C-EP	199
2SC281D	199
2SC281E	199
2SC281EP	199
2SC281F	199
2SC281G	199
2SC281GN	199
2SC281H	199
2SC281HA	199
2SC281HB	199
2SC281HC	199
2SC281J	199
2SC281K	199
2SC281L	199
2SC281M	199
2SC281OR	199
2SC281R	199
2SC281X	199
2SC281Y	199
2SC282	123AP
2SC282A	108
2SC282B	108
2SC282C	108
2SC282D	108
2SC282E	108
2SC282F	108
2SC282G	108
2SC282GN	108
2SC282H	123AP
2SC282HA	123AP
2SC282HB	123AP
2SC282HC	123AP
2SC282J	108
2SC282K	108
2SC282L	108
2SC282M	108
2SC282OR	108
2SC282R	108
2SC282X	108
2SC282Y	108
2SC283	123AP
2SC283A	199
2SC283B	199
2SC283C	199
2SC283D	199
2SC283E	199
2SC283F	199
2SC283G	199
2SC283GN	199
2SC283H	199
2SC283J	199
2SC283K	199
2SC283L	199
2SC283M	199
2SC283OR	199
2SC283R	199
2SC283X	199
2SC283Y	199
2SC284	123AP
2SC284A	199
2SC284B	199
2SC284C	199
2SC284D	199
2SC284E	199
2SC284F	199
2SC284G	199
2SC284GN	199
2SC284H	123AP
2SC284HA	123AP
2SC284HB	123AP
2SC284HC	123AP
2SC284J	199
2SC284K	199
2SC284L	199
2SC284M	199
2SC284OR	199
2SC284R	199
2SC284X	199
2SC284Y	199
2SC285	123AP
2SC285A	123AP
2SC285B	192
2SC285C	192
2SC285D	192
2SC285E	192
2SC285F	192
2SC285G	192
2SC285GN	192
2SC285H	192
2SC285J	192
2SC285K	192
2SC285L	192
2SC285M	192
2SC285OR	192
2SC285R	192
2SC285X	192
2SC285Y	192
2SC286	108
2SC286A	108
2SC286B	108
2SC286C	108
2SC286D	108
2SC286E	108
2SC286F	108
2SC286G	108
2SC286GN	108
2SC286H	108
2SC286J	108
2SC286K	108
2SC286L	108
2SC286M	108
2SC286OR	108
2SC286R	108
2SC286X	108
2SC286Y	108
2SC287	313
2SC287-OR	313
2SC287A	313
2SC287B	313
2SC287C	313
2SC287D	313
2SC287E	313
2SC287F	313
2SC287G	313
2SC287GN	313
2SC287H	313
2SC287J	313
2SC287K	313
2SC287L	313
2SC287M	313
2SC287OR	313
2SC287R	313
2SC287X	313
2SC287Y	313
2SC288	313
2SC288A	313
2SC288A1	192
2SC288AB	192
2SC288B	192
2SC288C	192
2SC288D	192
2SC288E	192
2SC288F	192
2SC288G	192
2SC288GN	192
2SC288H	192
2SC288J	192
2SC288K	192
2SC288L	192
2SC288M	192
2SC288OR	192
2SC288R	192
2SC288X	192
2SC288Y	192
2SC289	108
2SC289A	108
2SC289B	108
2SC289C	108
2SC289D	108
2SC289E	108
2SC289F	108
2SC289G	108
2SC289GN	108
2SC289H	108
2SC289J	108
2SC289K	108
2SC289L	108
2SC289M	108
2SC289OR	108
2SC289R	108
2SC289X	108
2SC289Y	108
2SC290	195A
2SC291	128
2SC291A	186
2SC291B	186
2SC291C	186
2SC291D	186
2SC291E	186
2SC291F	186
2SC291G	186
2SC291GN	186
2SC291H	186
2SC291J	186
2SC291K	186
2SC291L	186
2SC291M	186
2SC291OR	186
2SC291R	186
2SC291X	186
2SC291Y	186
2SC292	128
2SC292A	186
2SC292B	186
2SC292C	186
2SC292D	186
2SC292E	186
2SC292F	186
2SC292G	186
2SC292GN	186
2SC292H	186
2SC292J	186
2SC292K	186
2SC292L	186
2SC292M	186
2SC292OR	186
2SC292R	186
2SC292X	186
2SC292Y	186
2SC293	195A
2SC293A	128
2SC293B	128
2SC293C	128
2SC293D	128
2SC293E	128
2SC293F	128
2SC293G	128
2SC293GN	128
2SC293H	128
2SC293J	128
2SC293K	128
2SC293L	128
2SC293M	128
2SC293OR	128
2SC293R	128
2SC293X	128
2SC293Y	128
2SC294X	171
2SC295	123AP
2SC296	108
2SC297	186
2SC298	128
2SC298-4	128
2SC299	225
2SC299A	224
2SC299B	224
2SC299C	224
2SC299D	224
2SC299E	224
2SC299F	224
2SC299G	224
2SC299GN	224
2SC299H	224
2SC299J	224
2SC299K	224
2SC299L	224
2SC299M	224
2SC299OR	224
2SC299R	224
2SC299X	224
2SC299Y	224
2SC300	123AP
2SC300A	192
2SC300B	192
2SC300C	192
2SC300D	192
2SC300E	192
2SC300F	192
2SC300G	192
2SC300GN	192
2SC300H	192
2SC300J	192
2SC300K	192
2SC300L	192
2SC300M	192
2SC3000R	192
2SC300R	192
2SC300X	192
2SC300Y	192
2SC301	123AP
2SC301A	192
2SC301B	192
2SC301C	192
2SC301D	192
2SC301E	192
2SC301F	192
2SC301G	192
2SC301GN	192
2SC301H	192
2SC301J	192
2SC301K	192
2SC301L	192
2SC301M	192
2SC301OR	192
2SC301R	192
2SC301X	192
2SC301Y	192
2SC302	123AP
2SC302A	192
2SC302B	192
2SC302C	192
2SC302D	192
2SC302E	192
2SC302F	192
2SC302G	192
2SC302GN	192
2SC302H	192
2SC302J	192
2SC302K	192
2SC302L	192
2SC302M	192
2SC302OR	192
2SC302R	192
2SC302X	192
2SC302Y	192
2SC303	192
2SC304	192
2SC305	192
2SC305A	192
2SC305B	192
2SC305C	192
2SC305D	192
2SC305E	192
2SC305F	192
2SC305G	192
2SC305GN	192
2SC305H	192
2SC305J	192
2SC305K	192
2SC305L	192
2SC305M	192
2SC305OR	192
2SC305R	192
2SC305X	192
2SC305Y	192
2SC306	128
2SC306A	128
2SC306B	128
2SC306C	128
2SC306D	128
2SC306E	128
2SC306F	128
2SC306G	128
2SC306GN	128
2SC306H	128
2SC306J	128
2SC306K	128
2SC306L	128
2SC306M	128
2SC306OR	128
2SC306R	128
2SC306X	128
2SC306Y	128
2SC307	128
2SC307(CB-FINAL)	128
2SC307-OR	128
2SC307A	128
2SC307B	128
2SC307C	128
2SC307D	128
2SC307E	128
2SC307F	128
2SC307G	128
2SC307GN	128
2SC307H	128
2SC307J	128
2SC307K	128
2SC307L	128
2SC307M	128
2SC307OR	128
2SC307R	128
2SC307T	128
2SC307X	128
2SC307Y	128
2SC308	128
2SC308A	128
2SC308B	128
2SC308C	128
2SC308D	128
2SC308E	128
2SC308F	128
2SC308G	128
2SC308GN	128
2SC308H	128
2SC308J	128
2SC308K	128
2SC308L	128
2SC308M	128
2SC308OR	128
2SC308R	128
2SC308X	128
2SC308Y	128
2SC309	128
2SC309A	128
2SC309B	128
2SC309C	128
2SC309D	128
2SC309E	128
2SC309F	128
2SC309G	128
2SC309GN	128
2SC309H	128
2SC309J	128
2SC309K	128
2SC309L	128
2SC309M	128
2SC309OR	128
2SC309R	128
2SC309X	128
2SC309Y	128
2SC310	128
2SC310A	128
2SC310B	128
2SC310C	128
2SC310D	128
2SC310E	128
2SC310F	128
2SC310G	128
2SC310GN	128
2SC310H	128
2SC310J	128
2SC310K	128
2SC310L	128
2SC310M	128
2SC310OR	128
2SC310R	128
2SC310X	128
2SC310Y	128
2SC311	195A
2SC311A	195A
2SC311B	195A
2SC311C	195A
2SC311D	195A
2SC311E	195A
2SC311F	195A
2SC311G	195A
2SC311GN	195A
2SC311H	195A
2SC311J	195A
2SC311K	195A
2SC311L	195A
2SC311M	195A
2SC3110R	195A
2SC311R	195A
2SC311X	195A
2SC311Y	195A
2SC312	224
2SC312A	224
2SC312B	224
2SC312C	224
2SC312D	224
2SC312E	224
2SC312F	224
2SC312G	224
2SC312GN	224
2SC312H	224
2SC312J	224
2SC312K	224
2SC312L	224
2SC312M	224
2SC312OR	224
2SC312R	224
2SC312X	224
2SC312Y	224
2SC313	161
2SC313-OR	161
2SC313A	161
2SC313B	161
2SC313C	161
2SC313D	161
2SC313E	161
2SC313F	161
2SC313G	161
2SC313GN	161
2SC313H	161
2SC313J	161
2SC313K	161
2SC313L	161
2SC313M	161
2SC313OR	161
2SC313R	161
2SC313X	161
2SC313Y	161
2SC314	224
2SC315	123AP
2SC315A	195A
2SC315B	195A
2SC315C	195A
2SC315D	195A
2SC315E	195A
2SC315F	195A
2SC315G	195A
2SC315GN	195A
2SC315H	195A
2SC315J	195A
2SC315K	195A
2SC315L	195A
2SC315M	195A
2SC315OR	195A
2SC315R	195A
2SC315X	195A
2SC315Y	195A
2SC316	108
2SC316A	108
2SC316B	108
2SC316C	108
2SC316D	108
2SC316E	108
2SC316F	108
2SC316G	108
2SC316GN	108
2SC316H	108
2SC316J	108
2SC316K	108
2SC316L	108
2SC316M	108
2SC316OR	108
2SC316R	108
2SC316X	108
2SC316Y	108
2SC317	123AP
2SC317A	192
2SC317B	192
2SC317C	123AP
2SC317D	192
2SC317E	192
2SC317F	192
2SC317G	192
2SC317GN	192
2SC317H	192
2SC317J	192
2SC317K	192
2SC317L	192
2SC317M	192
2SC317OR	192
2SC317R	192
2SC317X	192
2SC317Y	192
2SC318	123AP
2SC318A	123AP
2SC318AB	199
2SC318B	199
2SC318C	199
2SC318D	199
2SC318E	199
2SC318F	199
2SC318G	199
2SC318GN	199
2SC318H	199
2SC318J	199
2SC318K	199
2SC318L	199
2SC318M	199
2SC318OR	199
2SC318R	199
2SC318X	199

PART NUMBER	NTE REPLACEMENT
2SC318Y	199
2SC319	123AP
2SC319A	123AP
2SC319B	123AP
2SC319C	123AP
2SC319D	123AP
2SC319E	123AP
2SC319F	123AP
2SC319G	123AP
2SC319GN	123AP
2SC319H	123AP
2SC319J	123AP
2SC319K	123AP
2SC319L	123AP
2SC319M	123AP
2SC319OR	123AP
2SC319R	123AP
2SC319X	123AP
2SC319Y	123AP
2SC320	123AP
2SC320A	123AP
2SC320B	123AP
2SC320C	123AP
2SC320D	123AP
2SC320E	123AP
2SC320F	123AP
2SC320G	123AP
2SC320GN	123AP
2SC320H	123AP
2SC320J	123AP
2SC320K	123AP
2SC320L	123AP
2SC320M	123AP
2SC3200R	123AP
2SC320R	123AP
2SC320X	123AP
2SC320Y	123AP
2SC321	123AP
2SC321A	123AP
2SC321B	123AP
2SC321C	123AP
2SC321D	123AP
2SC321E	123AP
2SC321F	123AP
2SC321G	123AP
2SC321GN	123AP
2SC321H	123AP
2SC321HA	123AP
2SC321HB	123AP
2SC321HC	123AP
2SC321J	123AP
2SC321K	123AP
2SC321L	123AP
2SC321M	123AP
2SC321OR	123AP
2SC321R	123AP
2SC321X	123AP
2SC321Y	123AP
2SC322	123AP
2SC323	123AP
2SC323A	199
2SC323B	199
2SC323C	199
2SC323D	199
2SC323E	199
2SC323F	199
2SC323G	199
2SC323GN	199
2SC323H	199
2SC323J	199
2SC323K	199
2SC323L	199
2SC323M	199
2SC323OR	199
2SC323R	199
2SC323X	199
2SC323Y	199
2SC324	123AP
2SC324A	123AP
2SC324B	229
2SC324C	229
2SC324D	229
2SC324E	229
2SC324F	229
2SC324G	229
2SC324GN	229
2SC324H	123AP
2SC324HA	123AP
2SC324J	229
2SC324K	229
2SC324L	229
2SC324M	229
2SC324OR	229
2SC324R	229
2SC324X	229
2SC324Y	229
2SC325	152
2SC325A	152
2SC325C	152
2SC325E	152
2SC326	278
2SC327	278
2SC328A	123AP
2SC329	107
2SC329B	107
2SC329C	107
2SC332	123AP
2SC333H	278
2SC333HA	278
2SC333HB	278
2SC333HC	278
2SC334	123A
2SC335	199
2SC336	123A
2SC337	121
2SC337B	199
2SC338	199
2SC339	123AP
2SC340	313
2SC341	297
2SC341V	127
2SC342	123AP
2SC343	123A
2SC344	107
2SC344(Y)	107
2SC344Y	107
2SC345	297
2SC346	123A
2SC347	123A
2SC348	161
2SC348A	319P
2SC348B	319P
2SC348C	319P
2SC348D	319P
2SC348E	319P
2SC348F	319P
2SC348G	319P
2SC348GN	319P
2SC348H	319P
2SC348J	319P
2SC348K	319P
2SC348L	319P
2SC348M	319P
2SC3480R	319P
2SC348X	319P
2SC348Y	319P
2SC349	107
2SC349R	107
2SC350	123AP
2SC350A	199
2SC350B	199
2SC350C	199
2SC350D	199
2SC350E	199
2SC350F	199
2SC350G	199
2SC350GN	199
2SC350H	123AP
2SC350J	199
2SC350K	199
2SC350L	199
2SC350M	199
2SC3500R	199
2SC350R	199
2SC350X	199
2SC350Y	199
2SC351	107
2SC351(FA)	107
2SC351A	108
2SC351B	108
2SC351C	108
2SC351D	108
2SC351E	108
2SC351F	108
2SC351FA1	108
2SC351G	108
2SC351GN	108
2SC351H	108
2SC351J	108
2SC351K	108
2SC351L	108
2SC351M	108
2SC351OR	108
2SC351R	108
2SC351X	108
2SC351Y	108
2SC352	128
2SC352-OR	128
2SC352A	128
2SC352AC	128
2SC352B	128
2SC352C	128
2SC352D	128
2SC352E	128
2SC352F	128
2SC352G	128
2SC352GN	128
2SC352H	128
2SC352J	128
2SC352K	128
2SC352L	128
2SC352M	128
2SC352OR	128
2SC352R	128
2SC352X	128
2SC352Y	128
2SC353	128
2SC353A	128
2SC353AC	128
2SC353B	128
2SC353C	128
2SC353D	128
2SC353E	128
2SC353F	128
2SC353G	128
2SC353GN	128
2SC353H	128
2SC353J	128
2SC353K	128
2SC353L	128
2SC353M	128
2SC353OR	128
2SC353R	128
2SC353X	128
2SC353Y	128
2SC354	235
2SC355	235
2SC356	123AP
2SC356A	123AP
2SC356B	123AP
2SC356C	123AP
2SC356D	123AP
2SC356E	123AP
2SC356F	123AP
2SC356G	123AP
2SC356GN	123AP
2SC356H	123AP
2SC356J	123AP
2SC356K	123AP
2SC356L	123AP
2SC356M	123AP
2SC356OR	123AP
2SC356R	123AP
2SC356X	123AP
2SC356Y	123AP
2SC360	123AP
2SC360-OR	123AP
2SC360A	123AP
2SC360B	123AP
2SC360C	123AP
2SC360D	123AP
2SC360E	123AP
2SC360F	123AP
2SC360G	123AP
2SC360GN	123AP
2SC360H	123AP
2SC360J	123AP
2SC360K	123AP
2SC360L	123AP
2SC360M	123AP
2SC3600R	123AP
2SC360R	123AP
2SC360X	123AP
2SC360Y	123AP
2SC361	289A
2SC361A	289A
2SC361B	289A
2SC361C	289A
2SC361D	289A
2SC361E	289A
2SC361F	289A
2SC361G	289A
2SC361GN	289A
2SC361H	289A
2SC361J	289A
2SC361K	289A
2SC361L	289A
2SC361M	289A
2SC3610R	289A
2SC361R	289A
2SC361X	289A
2SC361Y	289A
2SC362	289A
2SC362A	289A
2SC362B	289A
2SC362C	289A
2SC362D	289A
2SC362E	289A
2SC362F	289A
2SC362G	289A
2SC362GN	289A
2SC362H	289A
2SC362J	289A
2SC362K	289A
2SC362L	289A
2SC362M	289A
2SC3620R	289A
2SC362R	289A
2SC362X	289A
2SC362Y	289A
2SC363	85
2SC363-OR	123AP
2SC363A	123AP
2SC363B	123AP
2SC363C	123AP
2SC363D	123AP
2SC363E	123AP
2SC363F	123AP
2SC363G	123AP
2SC363GN	123AP
2SC363H	123AP
2SC363J	123AP
2SC363K	123AP
2SC363L	123AP
2SC363M	123AP
2SC363OR	123AP
2SC363R	123AP
2SC363X	123AP
2SC363Y	123AP
2SC364	123AP
2SC366	85
2SC366-0	85
2SC366-ORG-G	194
2SC366-RED-G	194
2SC366-Y	85
2SC366A	194
2SC366B	194
2SC366C	194
2SC366D	194
2SC366E	194
2SC366F	194
2SC366G	85
2SC366G-0	194
2SC366G-R	194
2SC366G-Y	194
2SC366GN	194
2SC366H	194
2SC366J	194
2SC366K	194
2SC366L	194
2SC366M	194
2SC3660R	194
2SC366X	194
2SC367	85
2SC367-0	194
2SC367-ORG-G	194
2SC367-R	194
2SC367-RED-G	194
2SC367-Y	194
2SC367-YEL-G	194
2SC367A	194
2SC367B	194
2SC367C	194
2SC367D	194
2SC367E	194
2SC367F	194
2SC367G	85
2SC367G-0	194
2SC367G-R	194
2SC367G-Y	194
2SC367GN	194
2SC367H	194
2SC367J	194
2SC367K	194
2SC367L	194
2SC367M	194
2SC367O	85
2SC367OR	194
2SC367X	194
2SC367Y	85
2SC368	199
2SC368-BL	199
2SC368-GR	199
2SC368A	199
2SC368B	199
2SC368BL	199
2SC368C	199
2SC368D	199
2SC368E	199
2SC368F	199
2SC368G	199
2SC368GN	199
2SC368GR	199
2SC368H	199
2SC368J	199
2SC368K	199
2SC368L	199
2SC368M	199
2SC3680R	199
2SC368R	199
2SC368V	199
2SC368X	199
2SC368Y	199
2SC369	123AP
2SC369-BL	199
2SC369-BLU-G	199
2SC369-GR	199
2SC369-GRN-G	199
2SC369-V	123AP
2SC369A	199
2SC369B	199
2SC369BL	123AP
2SC369C	199
2SC369D	199
2SC369E	199
2SC369F	199
2SC369G	123AP
2SC369G-BL	123AP
2SC369G-GR	123AP
2SC369G-V	199
2SC369G/BL	199
2SC369G/GR	199
2SC369GBL	123AP
2SC369GGR	123AP
2SC369GN	199
2SC369GR	123AP
2SC369H	199
2SC369J	199
2SC369K	199
2SC369L	199
2SC369M	199
2SC369OR	199
2SC369R	199
2SC369V	123AP
2SC369X	199
2SC369Y	199
2SC370	289A
2SC370-0	289A
2SC370-G	289A
2SC370-0	289A
2SC370-T	289A
2SC370A	289A
2SC370B	289A
2SC370C	289A
2SC370D	289A
2SC370E	289A
2SC370GN	289A
2SC370I	289A
2SC370L	289A
2SC370M	289A
2SC3700R	289A
2SC370R	289A
2SC370X	289A
2SC370Y	289A
2SC371	107
2SC371(O)	289A
2SC371-OR	289A
2SC371-ORG-G	289A
2SC371-RED-G	289A
2SC371-T	289A
2SC371A	289A
2SC371C	289A
2SC371D	289A
2SC371E	289A
2SC371F	289A
2SC371G-0	123AP
2SC371G-R	289A
2SC371GN	289A
2SC371H	289A
2SC371J	289A
2SC371K	289A
2SC371L	289A
2SC371M	289A
2SC3710R	289A
2SC371R-1	289A
2SC371RED-G	289A
2SC371T	289A
2SC371X	289A
2SC371Y	289A
2SC372	85
2SC372(H)	289
2SC372(IR)	229
2SC372(Y)	289
2SC372-1	85
2SC372-2	85
2SC372-0	85
2SC372-OR	289
2SC372-ORG	289
2SC372-ORG-G	289
2SC372-Y	85
2SC372-YEL-G	289
2SC372/4454C	85
2SC372A	289
2SC372AR	289
2SC372B	289
2SC372C	289
2SC372D	289
2SC372E	289
2SC372F	289
2SC372G	85
2SC372G-0	289
2SC372G-Y	289
2SC372GN	289
2SC372J	289
2SC372K	289
2SC372L	289
2SC372M	289
2SC372O	289
2SC372OR	289
2SC372R	289
2SC372Y	85
2SC372Y1	289
2SC372YEL	289
2SC372YEL-G	289
2SC372Z	289
2SC373	85
2SC373(GR)	199
2SC373(IR)	199
2SC373-0	85
2SC373-14	199
2SC373-G	199
2SC373-0	199
2SC373-OR	199
2SC373A	199
2SC373AL	199
2SC373B	199
2SC373C	199
2SC373D	199
2SC373E	199
2SC373F	199
2SC373G	85
2SC373GN	199
2SC373H	199
2SC373J	199
2SC373K	199
2SC373L	199
2SC373M	199
2SC373OR	199
2SC373R	199
2SC373X	199
2SC373Y	199
2SC374	199
2SC374(BL)	199
2SC374(V)	199
2SC374-BL	199
2SC374-OR	199
2SC374-V	199
2SC374A	199
2SC374B	199
2SC374BL	199
2SC374BLK	199
2SC374C	199
2SC374D	199
2SC374E	199
2SC374F	199
2SC374G	199
2SC374GN	199
2SC374H	199
2SC374J	199
2SC374JA	199
2SC374K	199
2SC374L	199
2SC374M	199
2SC374O R	199
2SC374R	199
2SC374V	199
2SC374X	199
2SC374Y	199
2SC375	311
2SC375-0	311
2SC375-0	107
2SC375-Y	311
2SC375A	108
2SC375B	108
2SC375C	108
2SC375D	108
2SC375E	108
2SC375F	108
2SC375G	108
2SC375GN	108
2SC375H	108
2SC375J	108
2SC375K	108
2SC375L	108
2SC375M	108
2SC3750R	108
2SC375R	108
2SC375X	108
2SC376	85
2SC376A	85
2SC376B	85
2SC376C	85
2SC376D	85
2SC376E	85
2SC376F	85
2SC376G	85
2SC376GN	85
2SC376H	85
2SC376J	85
2SC376K	85
2SC376L	85
2SC376M	85
2SC3760R	85
2SC376R	85
2SC376X	85
2SC376Y	85
2SC377	85
2SC377-0	85
2SC377-BN	85
2SC377-BRN	85
2SC377-O	85
2SC377-OR	85
2SC377-ORG	85
2SC377-R	85
2SC377-RED	85
2SC377A	85
2SC377B	85
2SC377BN	85
2SC377BRN	85
2SC377C	85
2SC377D	85
2SC377E	85
2SC377F	85
2SC377G	85
2SC377GN	85
2SC377H	85
2SC377J	85
2SC377K	85
2SC377L	85
2SC377M	85
2SC377O	85
2SC3770R	85
2SC377R	85
2SC377RED	85
2SC377X	85
2SC377Y	85
2SC378	289A
2SC378-ORG	289A
2SC378-RED	289A
2SC378-YEL	289A
2SC378A	289A
2SC378B	289A
2SC378C	289A
2SC378D	289A
2SC378E	289A
2SC378F	289A
2SC378G	289A
2SC378GN	289A
2SC378H	289A
2SC378J	289A
2SC378K	289A
2SC378L	289A
2SC378M	289A
2SC378O	289A
2SC378OR	289A
2SC378R	289A
2SC378X	289A
2SC378Y	289A
2SC379	85
2SC379A	85
2SC379B	85
2SC379C	85
2SC379D	85
2SC379E	85
2SC379F	85
2SC379G	85
2SC379GN	85
2SC379H	85
2SC379J	85
2SC379K	85
2SC379L	85
2SC379M	85
2SC379OR	85
2SC379R	85
2SC379X	85
2SC379Y	85
2SC380	85
2SC380(R)	85
2SC380-0	85
2SC380-0/4454C	85
2SC380-BRN	85
2SC380-0/4454C	85
2SC380-OR	85
2SC380-ORG	85
2SC380-R	85
2SC380-RED	85
2SC380-Y	107
2SC380-YEL	85
2SC380/4454C	85
2SC380A	85
2SC380A(D)	85
2SC380A(R)	85
2SC380A(Y)	85
2SC380A+0)	85
2SC380A-0	85
2SC380A-O	85
2SC380A-R	85
2SC380A-Y	85
2SC380AO	85
2SC380AO(IR)	229
2SC380AR	85
2SC380ATV	85
2SC380AY	85
2SC380B	85
2SC380B-Y	85
2SC380BY	85
2SC380C	85
2SC380C-Y	85
2SC380CY	85
2SC380D-Y	85
2SC380DY	85
2SC380E	85
2SC380E-Y	85
2SC380EY	85
2SC380F	85
2SC380F-Y	85
2SC380FY	85
2SC380G	85
2SC380GN	85
2SC380H	85
2SC380J	85
2SC380K	85
2SC380L	85
2SC380M	85
2SC380O	85
2SC380OR	85
2SC380R	85
2SC380R/4454C	85
2SC380RED	85
2SC380X	85
2SC380Y	85
2SC380YEL	85
2SC381	107
2SC381(BN)	107
2SC381-0	107
2SC381-BN	107
2SC381-BRN	107
2SC381-O	107
2SC381-OR	107
2SC381-ORG	107
2SC381-R	107
2SC381-RED	107
2SC381A	107
2SC381B	107
2SC381BN	107
2SC381BN-1	107
2SC381BRN	107
2SC381C	107
2SC381D	107
2SC381E	107
2SC381F	107
2SC381G	107
2SC381GN	107
2SC381H	107
2SC381J	107
2SC381K	107
2SC381L	107
2SC381M	107
2SC381O	107
2SC381OR	107
2SC381R	107
2SC381RED	107
2SC381RL	107
2SC381X	107
2SC381Y	107
2SC382	319P
2SC382(BL)	319P
2SC382(BN)	319P
2SC382(R)	319P
2SC382-BK	319P
2SC382-BK(1)	319P
2SC382-BK(2)	319P
2SC382-G	319P
2SC382-GR	319P
2SC382-GY	319P
2SC382-OR	319P
2SC382-R	319P
2SC382-V	319P
2SC382A	319P
2SC382B	319P
2SC382BK	319P
2SC382BK1	319P
2SC382BK2	319P
2SC382BL	319P
2SC382BN	319P
2SC382BR	319P
2SC382C	319P
2SC382D	319P
2SC382E	319P
2SC382F	319P
2SC382G	319P
2SC382GN	319P
2SC382GR	319P
2SC382GY	319P
2SC382H	319P
2SC382J	319P
2SC382K	319P
2SC382L	319P
2SC382M	319P
2SC382OR	319P
2SC382R	319P
2SC382V	319P
2SC382W	319P
2SC382W,R	319P
2SC382X	319P
2SC382Y	319P
2SC383	129

PART NUMBER	NTE REPLACEMENT
2SC383(T)	85
2SC383-OR	85
2SC383A	85
2SC383B	85
2SC383C	85
2SC383D	85
2SC383E	85
2SC383GN	85
2SC383H	85
2SC383J	85
2SC383K	85
2SC383L	85
2SC383M	85
2SC3830R	85
2SC383R	85
2SC383TM	85
2SC383WT	129
2SC383X	85
2SC384	107
2SC384(O)	229
2SC384(Y)	229
2SC384-0	229
2SC384-0	107
2SC384A	229
2SC384B	229
2SC384C	229
2SC384D	229
2SC384E	229
2SC384F	229
2SC384G	229
2SC384GN	229
2SC384H	229
2SC384J	229
2SC384K	229
2SC384L	229
2SC384M	229
2SC384OR	229
2SC384R	229
2SC384X	229
2SC384Y	107
2SC385	107
2SC385A	107
2SC385B	108
2SC385C	108
2SC385D	108
2SC385E	108
2SC385F	108
2SC385G	108
2SC385GN	108
2SC385H	108
2SC385J	108
2SC385K	108
2SC385L	108
2SC385M	108
2SC3850R	108
2SC385R	108
2SC385X	108
2SC385Y	108
2SC386	108
2SC386-0	108
2SC386A	108
2SC386A-0(TV)	108
2SC386AO	108
2SC386B	108
2SC386C	108
2SC386D	108
2SC386E	108
2SC386F	108
2SC386G	108
2SC386GN	108
2SC386H	108
2SC386J	108
2SC386K	108
2SC386L	108
2SC386M	108
2SC3860R	108
2SC386R	108
2SC386X	108
2SC386Y	108
2SC387	107
2SC387-G	316
2SC387-OR	316
2SC387A	316
2SC387A(FA-3)	316
2SC387AG	316
2SC387B	316
2SC387C	316
2SC387D	316
2SC387E	316
2SC387F	316
2SC387FA3	316
2SC387G	316
2SC387GN	316
2SC387H	316
2SC387J	316
2SC387K	316
2SC387L	316
2SC387M	316
2SC3870R	316
2SC387R	316
2SC387X	316
2SC387Y	316
2SC388	85
2SC388-A	85
2SC388-OR	85
2SC388A	85
2SC388A-TM	85
2SC388AFA	85
2SC388AFM	85
2SC388ATM	85
2SC388ATMFA	85
2SC388B	85
2SC388C	85
2SC388D	85
2SC388E	85
2SC388F	85
2SC388FA	85
2SC388FM	85
2SC388G	85
2SC388GN	85
2SC388H	85
2SC388J	85
2SC388K	85
2SC388L	85
2SC388M	85
2SC388OR	85
2SC388R	85
2SC388TM	85
2SC388X	85
2SC388Y	85
2SC389	161
2SC389-0	161
2SC389-0	108
2SC389-OR	108
2SC389A	108
2SC389B	108
2SC389BLB-0	108
2SC389C	108
2SC389D	108
2SC389E	108
2SC389F	108
2SC389G	108
2SC389GN	108
2SC389H	108
2SC389J	108
2SC389K	108
2SC389L	108
2SC389LP	108
2SC389M	108
2SC389OR	108
2SC389R	161
2SC389X	108
2SC389Y	108
2SC390	161
2SC390A	319P
2SC390B	319P
2SC390C	319P
2SC390D	319P
2SC390E	319P
2SC390F	319P
2SC390G	319P
2SC390GN	319P
2SC390H	319P
2SC390J	319P
2SC390K	319P
2SC390L	319P
2SC390M	319P
2SC390OR	319P
2SC390R	319P
2SC390X	319P
2SC390Y	319P
2SC391	319P
2SC391A	319P
2SC391B	319P
2SC391C	319P
2SC391D	319P
2SC391E	319P
2SC391F	319P
2SC391G	319P
2SC391GN	319P
2SC391H	319P
2SC391J	319P
2SC391K	319P
2SC391L	319P
2SC391M	319P
2SC391OR	319P
2SC391R	319P
2SC391X	319P
2SC391Y	319P
2SC392	108
2SC392A	319P
2SC392B	319P
2SC392C	319P
2SC392D	319P
2SC392E	319P
2SC392F	319P
2SC392G	319P
2SC392GN	319P
2SC392H	319P
2SC392J	319P
2SC392K	319P
2SC392L	319P
2SC392M	319P
2SC392OR	319P
2SC392R	319P
2SC392X	319P
2SC392Y	319P
2SC393	123AP
2SC394	289
2SC394(0)	289A
2SC394(0)	289A
2SC394-0	289A
2SC394-GR	289A
2SC394-GRN	289A
2SC394-0	289A
2SC394-OR	289A
2SC394-ORG	289A
2SC394-R	289A
2SC394-RED	289A
2SC394-Y	289A
2SC394-YEL	289A
2SC394A	289A
2SC394AP	289A
2SC394B	289A
2SC394C	289A
2SC394D	289A
2SC394E	289A
2SC394F	289A
2SC394G	289A
2SC394GN	289A
2SC394GRN	289A
2SC394H	289A
2SC394J	289A
2SC394K	289A
2SC394L	289A
2SC394M	289A
2SC394O	289A
2SC394OR	289A
2SC394RED	289A
2SC394YEL	289A
2SC395	123AP
2SC395A	123AP
2SC395A-0	123AP
2SC395A-ORG	123AP
2SC395A-R	123AP
2SC395A-RED	123AP
2SC395A-Y	123AP
2SC395A-YEL	123AP
2SC395B	123AP
2SC395C	123AP
2SC395D	123AP
2SC395E	123AP
2SC395F	123AP
2SC395G	123AP
2SC395GN	123AP
2SC395H	123AP
2SC395J	123AP
2SC395K	123AP
2SC395L	123AP
2SC395M	123AP
2SC395OR	123AP
2SC395R	123AP
2SC395X	123AP
2SC395Y	123AP
2SC396	123AP
2SC396A	192
2SC396B	192
2SC396C	192
2SC396D	192
2SC396E	192
2SC396F	192
2SC396G	192
2SC396GN	192
2SC396GR	192
2SC396H	192
2SC396J	192
2SC396K	192
2SC396L	192
2SC396M	192
2SC396OR	192
2SC396R	192
2SC396X	192
2SC396Y	192
2SC397	108
2SC397A	108
2SC397B	108
2SC397C	108
2SC397D	108
2SC397E	108
2SC397F	108
2SC397G	108
2SC397GN	108
2SC397H	108
2SC397J	108
2SC397K	108
2SC397L	108
2SC397M	108
2SC397OR	108
2SC397R	108
2SC397X	108
2SC397Y	108
2SC398	161
2SC398(FA-1)	108
2SC398A	229
2SC398B	229
2SC398C	229
2SC398D	229
2SC398E	229
2SC398F	229
2SC398FA1	229
2SC398G	229
2SC398GN	229
2SC398H	229
2SC398J	229
2SC398K	229
2SC398L	229
2SC398M	229
2SC398OR	229
2SC398R	229
2SC398X	229
2SC398Y	229
2SC399	161
2SC399A	229
2SC399B	229
2SC399C	229
2SC399D	229
2SC399E	229
2SC399F	229
2SC399FA1	229
2SC399G	229
2SC399GN	229
2SC399H	229
2SC399J	229
2SC399K	229
2SC399L	229
2SC399M	229
2SC399OR	229
2SC399R	229
2SC399X	229
2SC399Y	229
2SC400	123AP
2SC400-0	123AP
2SC400-GR	199
2SC400-0	199
2SC400-R	123AP
2SC400-Y	123AP
2SC400A	199
2SC400B	199
2SC400C	199
2SC400D	199
2SC400E	199
2SC400F	199
2SC400G	199
2SC400GN	199
2SC400H	199
2SC400J	199
2SC400K	199
2SC400L	199
2SC400M	199
2SC4000R	199
2SC400R	199
2SC400X	199
2SC400Y	199
2SC401	289A
2SC401B	289A
2SC401C	289A
2SC401D	289A
2SC401E	289A
2SC401F	289A
2SC401G	289A
2SC401GN	289A
2SC401H	289A
2SC401J	289A
2SC401K	289A
2SC401L	289A
2SC401M	289A
2SC4010R	289A
2SC401R	289A
2SC401X	289A
2SC401Y	289A
2SC402	289A
2SC402B	289A
2SC402C	289A
2SC402D	289A
2SC402E	289A
2SC402F	289A
2SC402G	289A
2SC402GN	289A
2SC402H	289A
2SC402J	289A
2SC402K	289A
2SC402L	289A
2SC402M	289A
2SC4020R	289A
2SC402R	289A
2SC402X	289A
2SC402Y	289A
2SC403	289A
2SC403(SONY)	289A
2SC403-OZ	289A
2SC403-OR	289A
2SC403-SP	289A
2SC403A	199
2SC403AL	289A
2SC403B	289A
2SC403C	289A
2SC403C-5	289A
2SC403CG	289A
2SC403D	289A
2SC403E	289A
2SC403F	289A
2SC403G	289A
2SC403GN	289A
2SC403H	289A
2SC403J	289A
2SC403K	289A
2SC403L	289A
2SC403M	289A
2SC403OR	289A
2SC403R	289A
2SC403SP	289A
2SC403X	289A
2SC403Y	289A
2SC404A	289A
2SC404B	289A
2SC404C	289A
2SC404D	289A
2SC404E	289A
2SC404F	289A
2SC404G	289A
2SC404GN	289A
2SC404H	289A
2SC404J	289A
2SC404K	289A
2SC404L	289A
2SC404M	289A
2SC4040R	289A
2SC404R	289A
2SC404X	289A
2SC404Y	289A
2SC405	108
2SC405A	123AP
2SC405B	123AP
2SC405C	123AP
2SC405D	123AP
2SC405E	123AP
2SC405F	123AP
2SC405G	123AP
2SC405GN	123AP
2SC405H	123AP
2SC405J	123AP
2SC405K	123AP
2SC405L	123AP
2SC405M	123AP
2SC4050R	123AP
2SC405R	123AP
2SC405X	123AP
2SC405Y	123AP
2SC406	108
2SC406A	123AP
2SC406B	123AP
2SC406C	123AP
2SC406D	123AP
2SC406E	123AP
2SC406F	123AP
2SC406G	123AP
2SC406GN	123AP
2SC406H	123AP
2SC406J	123AP
2SC406K	123AP
2SC406L	123AP
2SC406M	123AP
2SC4060R	123AP
2SC406R	123AP
2SC406X	123AP
2SC406Y	123AP
2SC407	162
2SC408	163A
2SC409	163A
2SC410	163A
2SC410A	162
2SC411	163A
2SC412	163A
2SC413	224
2SC414	224
2SC415	224
2SC416	224
2SC420	224
2SC423	123AP
2SC423-0	123AP
2SC423A	123AP
2SC423B	123AP
2SC423C	123AP
2SC423D	123AP
2SC423E	123AP
2SC423F	123AP
2SC423G	123AP
2SC423GN	123AP
2SC423H	123AP
2SC423J	123AP
2SC423K	123AP
2SC423L	123AP
2SC423M	123AP
2SC423OR	123AP
2SC423R	123AP
2SC423X	123AP
2SC423Y	123AP
2SC424	123AP
2SC424D	123AP
2SC425	123AP
2SC425A	128
2SC425B	123AP
2SC425C	123AP
2SC425D	123AP
2SC425E	123AP
2SC425F	123AP
2SC425G	128
2SC425GN	128
2SC425H	128
2SC425K	128
2SC425L	128
2SC425M	128
2SC425OR	128
2SC425R	128
2SC425X	128
2SC425Y	128
2SC426	123AP
2SC427	123AP
2SC428	123AP
2SC429	108
2SC429A	108
2SC429B	108
2SC429C	108
2SC429D	108
2SC429E	108
2SC429F	108
2SC429G	108
2SC429GN	108
2SC429H	108
2SC429J	108
2SC429K	108
2SC429L	108
2SC429M	108
2SC429OR	108
2SC429R	108
2SC429X	108
2SC429Y	108
2SC430	108
2SC430A	108
2SC430B	108
2SC430C	108
2SC430D	108
2SC430E	108
2SC430F	108
2SC430G	108
2SC430GN	108
2SC430H	108
2SC430J	108
2SC430K	108
2SC430L	108
2SC430M	108
2SC430OR	108
2SC430R	108
2SC430W	108
2SC430X	108
2SC430Y	108
2SC433	123AP
2SC437	224
2SC438	195A
2SC439	293
2SC440	123
2SC441	123
2SC441A	293
2SC441B	293
2SC441C	293
2SC441D	293
2SC441E	293
2SC441F	293
2SC441G	293
2SC441GN	293
2SC441H	293
2SC441J	293
2SC441K	293
2SC441L	293
2SC441M	293
2SC4410R	293
2SC441R	293
2SC441X	293
2SC441Y	293
2SC442	123
2SC442A	293
2SC442B	293
2SC442C	293
2SC442D	293
2SC442E	293
2SC442F	293
2SC442G	293
2SC442GN	293
2SC442H	293
2SC442J	293
2SC442K	293
2SC442L	293
2SC442M	293
2SC4420R	293
2SC442R	293
2SC442X	293
2SC442Y	293
2SC443	128
2SC443A	128
2SC443B	128
2SC443C	128
2SC443D	128
2SC443E	128
2SC443F	128
2SC443G	128
2SC443GN	128
2SC443H	128
2SC443J	128
2SC443K	128
2SC443L	128
2SC443M	128
2SC4430R	128
2SC443R	128
2SC443X	128
2SC443Y	128
2SC444	192
2SC445	198
2SC445A	198
2SC445B	198
2SC445C	198
2SC445D	198
2SC445E	198
2SC445F	198
2SC445G	198
2SC445GN	198
2SC445H	198
2SC445J	198
2SC445K	198
2SC445L	198
2SC445M	198
2SC4450R	198
2SC445R	198
2SC445X	198
2SC445Y	198
2SC446	195A
2SC454	85
2SC454(B)	85
2SC454(C)	85
2SC454-3	85
2SC454-5	85
2SC454-C	85
2SC454-OR	85
2SC454B	85
2SC454B(IR)	123AP
2SC454B-6	85
2SC454BL	85
2SC454C	85
2SC454E	85
2SC454F	85
2SC454G	85
2SC454GN	85
2SC454H	85
2SC454J	85
2SC454K	85
2SC454M	85
2SC4540R	85
2SC454R	85
2SC454X	85
2SC454Y	85
2SC455-OR	289A
2SC455A	289A
2SC455B	289A
2SC455C	289A
2SC455D	289A
2SC455E	289A
2SC455F	289A
2SC455G	289A
2SC455GN	289A
2SC455H	289A
2SC455J	289A
2SC455K	289A
2SC455L	289A
2SC455M	289A
2SC4550R	289A
2SC455R	289A
2SC455X	289A
2SC455Y	289A
2SC456	195A
2SC456-0	195A
2SC456A	195A
2SC456B	293
2SC456C	293
2SC456D	195A
2SC456E	293
2SC456F	293
2SC456G	293
2SC456GN	293
2SC456H	293
2SC456J	293
2SC456K	293
2SC456L	293
2SC456M	293
2SC456OR	293
2SC456R	293
2SC456X	293
2SC456Y	293
2SC457	123AP
2SC458	199
2SC458(B)	85
2SC458(C)	85
2SC458(C,D)	85
2SC458(D)	85
2SC458(LG)	85
2SC458-0	85
2SC458-4	85
2SC458-5	85
2SC458-B	85
2SC458-C	85
2SC458-D	85
2SC458-GR	85
2SC458-0	85
2SC458-OR	85
2SC458-Y	85
2SC458A	85
2SC458AK	85
2SC458B	85
2SC458B(IR)	123AP
2SC458B-D	85
2SC458BD	85
2SC458BK	85
2SC458BLG	85
2SC458BM	85
2SC458C	85
2SC458C/L6	85
2SC458CD	85
2SC458CD-TB	199
2SC458CL	85
2SC458CLG	85
2SC458D	85
2SC458E	85
2SC458F	85
2SC458GN	85
2SC458GR	85
2SC458H	85
2SC458J	85
2SC458K	85
2SC458KB	85
2SC458KC	85
2SC458KD	85
2SC458L6	85
2SC458L(C)	85
2SC458LD	85
2SC458LG	85
2SC458LG(C)	85
2SC458LG(D)	85
2SC458LGB	85
2SC458LGC	85
2SC458LGC-6	85
2SC458LGD	85
2SC458LGR	85
2SC458OR	85
2SC458R	85
2SC458X	85
2SC458Y	85
2SC459	85
2SC459A	85
2SC459B	85
2SC459C	85
2SC459D	85
2SC459E	85
2SC459F	85
2SC459G	85
2SC459GN	85
2SC459H	85
2SC459J	85
2SC459K	85
2SC459L	85
2SC459M	85
2SC459OR	85
2SC459R	85
2SC459X	85
2SC459Y	85
2SC460	85
2SC460-5	85
2SC460-B	85
2SC460-C	85
2SC460-OR	85
2SC460A	85
2SC460B	85
2SC460B(IR)	229
2SC460C	85
2SC460E	85
2SC460GN	85
2SC460J	85
2SC460M	85
2SC460OR	85
2SC460R	85
2SC460X	85

PART NUMBER	NTE REPLACEMENT
2SC460Y	85
2SC461	289
2SC461(8F)	85
2SC461-8F	85
2SC461-A	85
2SC461-B	85
2SC461A	85
2SC461AL	85
2SC461B	85
2SC461BF	85
2SC461BK	85
2SC461BL	85
2SC461C	85
2SC461EP	85
2SC462	123AP
2SC463	319P
2SC463A	161
2SC463B	161
2SC463C	161
2SC463D	161
2SC463E	161
2SC463F	161
2SC463G	161
2SC463GN	161
2SC463H	319P
2SC463J	161
2SC463K	161
2SC463L	161
2SC463M	161
2SC463OR	161
2SC463R	161
2SC463X	161
2SC463Y	161
2SC464	161
2SC464A	229
2SC464B	229
2SC464C	161
2SC464D	229
2SC464E	229
2SC464F	229
2SC464G	229
2SC464GN	229
2SC464H	229
2SC464J	229
2SC464K	229
2SC464L	229
2SC464M	229
2SC464OR	229
2SC464R	229
2SC464X	229
2SC464Y	229
2SC465	161
2SC465A	229
2SC465B	229
2SC465C	229
2SC465D	229
2SC465E	229
2SC465F	229
2SC465G	229
2SC465GN	229
2SC465H	229
2SC465J	229
2SC465K	229
2SC465L	229
2SC465M	229
2SC465OR	229
2SC465R	229
2SC465X	229
2SC465Y	229
2SC466	161
2SC466A	229
2SC466B	229
2SC466C	229
2SC466D	229
2SC466E	229
2SC466F	229
2SC466G	229
2SC466GN	229
2SC466H	161
2SC466J	229
2SC466K	229
2SC466L	229
2SC466M	229
2SC466OR	229
2SC466R	229
2SC466X	229
2SC466Y	229
2SC467	108
2SC467C	85
2SC468	123AP
2SC468(LGR)	289
2SC468A	123AP
2SC468B	287
2SC468H	287
2SC468LGR	287
2SC469	313
2SC469-OR	313
2SC469A	313
2SC469B	313
2SC469C	313
2SC469D	313
2SC469E	313
2SC469F	313
2SC469G	313
2SC469GN	313
2SC469H	313
2SC469J	313
2SC469K	313
2SC469L	313
2SC469M	313
2SC469OR	313
2SC469Q	313
2SC469R	313
2SC469X	313

PART NUMBER	NTE REPLACEMENT
2SC469Y	313
2SC470	154
2SC470-3	154
2SC470-4	154
2SC470-5	154
2SC470-6	154
2SC470A	154
2SC470B	154
2SC470C	154
2SC470D	154
2SC470E	154
2SC470F	154
2SC470G	154
2SC470GN	154
2SC470H	154
2SC470J	154
2SC470K	154
2SC470L	154
2SC470M	154
2SC470OR	154
2SC470R	154
2SC470X	154
2SC470Y	154
2SC471	293
2SC472	229
2SC472A	229
2SC472B	229
2SC472C	229
2SC472D	229
2SC472E	229
2SC472F	229
2SC472G	229
2SC472GN	229
2SC472H	229
2SC472J	229
2SC472K	229
2SC472L	229
2SC472M	229
2SC472OR	229
2SC472R	229
2SC472X	229
2SC472Y	154
2SC473	160
2SC474	123AP
2SC475	123AP
2SC475A	199
2SC475B	199
2SC475C	199
2SC475D	199
2SC475E	199
2SC475F	199
2SC475G	199
2SC475GN	199
2SC475H	199
2SC475J	199
2SC475K	123AP
2SC475L	199
2SC475M	199
2SC475OR	199
2SC475R	199
2SC475X	199
2SC475Y	199
2SC476	123AP
2SC476A	199
2SC476B	199
2SC476C	199
2SC476D	199
2SC476E	199
2SC476F	199
2SC476G	199
2SC476GN	199
2SC476H	199
2SC476J	199
2SC476K	199
2SC476L	199
2SC476M	199
2SC476OR	199
2SC476R	199
2SC476X	199
2SC476Y	199
2SC477	108
2SC477A	108
2SC477B	108
2SC477C	108
2SC477D	108
2SC477E	108
2SC477F	108
2SC477G	108
2SC477GN	108
2SC477H	108
2SC477J	108
2SC477K	108
2SC477L	108
2SC477M	108
2SC477OR	108
2SC477R	108
2SC477X	108
2SC477Y	108
2SC478	123A
2SC478(D)	195A
2SC478-4	195A
2SC478-0	195A
2SC478A	195A
2SC478B	195A
2SC478C	195A
2SC478D	195A
2SC478E	195A
2SC478F	195A
2SC478G	195A
2SC478GN	195A
2SC478H	195A
2SC478J	195A
2SC478K	195A
2SC478L	195A

PART NUMBER	NTE REPLACEMENT
2SC478M	195A
2SC478OR	195A
2SC478R	195A
2SC478X	195A
2SC478Y	195A
2SC479	128
2SC479A	128
2SC479B	128
2SC479C	128
2SC479D	128
2SC479E	128
2SC479F	128
2SC479G	128
2SC479GN	128
2SC479H	128
2SC479J	128
2SC479K	128
2SC479L	128
2SC479M	128
2SC479OR	128
2SC479R	128
2SC479X	128
2SC479Y	128
2SC480	297
2SC481	195A
2SC481-OR	195A
2SC481A	195A
2SC481B	195A
2SC481C	195A
2SC481D	195A
2SC481E	195A
2SC481F	195A
2SC481G	195A
2SC481GN	195A
2SC481H	195A
2SC481J	195A
2SC481K	195A
2SC481L	195A
2SC481M	195A
2SC481OR	195A
2SC481R	195A
2SC481X	195A
2SC481Y	195A
2SC482	195A
2SC482-0	195A
2SC482-GR	195A
2SC482-GRN	195A
2SC482-O	195A
2SC482-OR	195A
2SC482-ORG	195A
2SC482-Y	195A
2SC482-YEL	195A
2SC482A	195A
2SC482B	195A
2SC482C	195A
2SC482D	195A
2SC482E	195A
2SC482F	195A
2SC482G	195A
2SC482GN	195A
2SC482GR	195A
2SC482GRN	195A
2SC482GRY	195A
2SC482H	195A
2SC482J	195A
2SC482K	195A
2SC482L	195A
2SC482M	195A
2SC482OR	195A
2SC482R	195A
2SC482X	195A
2SC482Y	195A
2SC482YEL	195A
2SC484	324
2SC484A	324
2SC484B	324
2SC484BL	324
2SC484C	324
2SC484D	324
2SC484E	324
2SC484F	324
2SC484G	324
2SC484GN	324
2SC484H	324
2SC484J	324
2SC484K	324
2SC484L	324
2SC484M	324
2SC484OR	324
2SC484R	324
2SC484X	324
2SC484Y	324
2SC485	324
2SC485-OR	324
2SC485A	324
2SC485B	324
2SC485BL	324
2SC485C	324
2SC485D	324
2SC485E	324
2SC485F	324
2SC485G	324
2SC485GN	324
2SC485H	324
2SC485J	324
2SC485K	324
2SC485L	324
2SC485M	324
2SC485OR	324
2SC485R	324
2SC485X	324
2SC485Y	324
2SC486-R	324
2SC486-RED	324

PART NUMBER	NTE REPLACEMENT
2SC486-Y	324
2SC486-YEL	324
2SC486A	324
2SC486B	324
2SC486BL	324
2SC486C	324
2SC486D	324
2SC486E	324
2SC486F	324
2SC486G	324
2SC486GN	324
2SC486H	324
2SC486J	324
2SC486K	324
2SC486L	324
2SC486M	324
2SC486OR	324
2SC486R	324
2SC486X	324
2SC486Y	324
2SC487	175
2SC488	175
2SC489	175
2SC489-R	152
2SC489-Y	152
2SC489A	152
2SC489B	152
2SC489C	152
2SC489D	152
2SC489E	152
2SC489F	152
2SC489G	152
2SC489GN	152
2SC489H	152
2SC489J	152
2SC489K	152
2SC489L	152
2SC489M	152
2SC489OR	152
2SC489R	152
2SC489X	152
2SC489Y	175
2SC490	175
2SC490-BLU	236
2SC490-R	236
2SC490-RED	236
2SC490-Y	236
2SC490-YEL	236
2SC491	175
2SC491-BL	152
2SC491-BLU	152
2SC491-R	152
2SC491-RED	152
2SC491-Y	152
2SC491-YEL	152
2SC491A	152
2SC491B	152
2SC491BL	175
2SC491C	152
2SC491D	152
2SC491E	152
2SC491F	152
2SC491G	152
2SC491GN	152
2SC491H	152
2SC491J	152
2SC491K	152
2SC491L	152
2SC491M	152
2SC491OR	152
2SC491R	175
2SC491X	152
2SC491Y	175
2SC492	162
2SC493	87
2SC493A	181
2SC493B	181
2SC493C	181
2SC493D	181
2SC493E	181
2SC493F	181
2SC493G	181
2SC493GN	181
2SC493H	181
2SC493J	181
2SC493K	181
2SC493L	181
2SC493M	181
2SC493OR	181
2SC493R	181
2SC493X	181
2SC493Y	181
2SC495	295
2SC495(C.B.)	295
2SC495-0	295
2SC495-O	295
2SC495-OR	295
2SC495-ORG	295
2SC495-R	295
2SC495-RED	295
2SC495-Y	295
2SC495-YEL	295
2SC495A	295
2SC495AP	295
2SC495AQ	295
2SC495B	295
2SC495C	295
2SC495D	295
2SC495E	295
2SC495F	295
2SC495G	295
2SC495GN	295
2SC495H	295
2SC495J	295

PART NUMBER	NTE REPLACEMENT
2SC495K	295
2SC495L	295
2SC495M	295
2SC495OR	295
2SC495P	295
2SC495R	295
2SC495RED	295
2SC495T	295
2SC495X	295
2SC495Y	295
2SC495YEL	295
2SC496	295
2SC496(O)	295
2SC496-0	295
2SC496-O	295
2SC496-OR	295
2SC496-ORG	295
2SC496-R	295
2SC496-RED	295
2SC496-Y	295
2SC496-YEL	295
2SC496A	295
2SC496B	295
2SC496C	295
2SC496D	295
2SC496E	295
2SC496F	295
2SC496G	295
2SC496GN	295
2SC496H	295
2SC496J	295
2SC496K	295
2SC496L	295
2SC496M	295
2SC496OR	295
2SC496R	295
2SC496RED	295
2SC496X	295
2SC496Y	295
2SC496YEL	295
2SC497	128
2SC497-0	128
2SC497-O	128
2SC497-OR	128
2SC497-ORG	128
2SC497-R	128
2SC497-RED	128
2SC497-Y	128
2SC497A	128
2SC497B	128
2SC497C	128
2SC497D	128
2SC497E	128
2SC497F	128
2SC497G	128
2SC497GN	128
2SC497H	128
2SC497J	128
2SC497K	128
2SC497L	128
2SC497M	128
2SC497OR	128
2SC497R	128
2SC497RED	128
2SC497X	128
2SC497Y	128
2SC498	128
2SC498-0	128
2SC498-O	128
2SC498-OR	128
2SC498-ORG	128
2SC498-R	128
2SC498-RED	128
2SC498-Y	128
2SC498-YEL	128
2SC498A	128
2SC498B	128
2SC498C	128
2SC498D	128
2SC498E	128
2SC498F	128
2SC498G	128
2SC498GN	128
2SC498H	128
2SC498J	128
2SC498K	128
2SC498L	128
2SC498M	128
2SC498OR	128
2SC498R	128
2SC498RED	128
2SC498X	128
2SC498Y	128
2SC498YEL	128
2SC499	194
2SC499(R)	194
2SC499(Y)	194
2SC499-OR	194
2SC499-R	194
2SC499-R(FA-1)	194
2SC499-RED	194
2SC499-RY	194
2SC499-Y	194
2SC499-Y(FA-1)	194
2SC499-YEL	194
2SC499A	194
2SC499B	194
2SC499C	194
2SC499D	194
2SC499E	194
2SC499F	194
2SC499FA1	194
2SC499G	194
2SC499GN	194

PART NUMBER	NTE REPLACEMENT
2SC499H	194
2SC499J	194
2SC499K	194
2SC499L	194
2SC499M	194
2SC499OR	194
2SC499R	194
2SC499RED	194
2SC499RY	194
2SC499X	194
2SC499Y	194
2SC499YEL	194
2SC500	154
2SC500(Y)	171
2SC500A	171
2SC500B	171
2SC500C	171
2SC500D	171
2SC500E	171
2SC500F	171
2SC500G	171
2SC500GN	171
2SC500H	171
2SC500J	171
2SC500K	171
2SC500L	171
2SC500M	171
2SC500OR	171
2SC500R	154
2SC500X	171
2SC500Y	154
2SC501	128
2SC501-0	128
2SC501-ORG	128
2SC501-R	128
2SC501-RED	128
2SC501-Y	128
2SC501-YEL	128
2SC501A	128
2SC501B	128
2SC501C	128
2SC501D	128
2SC501E	128
2SC501F	128
2SC501G	128
2SC501GN	128
2SC501H	128
2SC501J	128
2SC501K	128
2SC501L	128
2SC501M	128
2SC501O	198
2SC501OR	128
2SC501R	128
2SC501X	128
2SC501Y	128
2SC502	195A
2SC502A	128
2SC502B	128
2SC502C	128
2SC502D	128
2SC502E	128
2SC502F	128
2SC502G	128
2SC502GN	128
2SC502H	128
2SC502J	128
2SC502K	128
2SC502L	128
2SC502M	128
2SC502OR	128
2SC502R	128
2SC502X	128
2SC502Y	128
2SC503	128
2SC503-GR	128
2SC503-0	128
2SC503-Y	128
2SC503A	128
2SC503B	128
2SC503C	128
2SC503D	128
2SC503E	128
2SC503F	128
2SC503G	128
2SC503GN	128
2SC503GR	128
2SC503H	128
2SC503J	128
2SC503K	128
2SC503L	128
2SC503M	128
2SC503OR	128
2SC503R	128
2SC503X	128
2SC504	128
2SC504-GR	128
2SC504-0	128
2SC504-Y	128
2SC504A	128
2SC504B	128
2SC504C	128
2SC504D	128
2SC504E	128
2SC504F	128
2SC504G	128
2SC504GN	128
2SC504GR	128
2SC504H	128
2SC504J	128
2SC504K	128
2SC504L	128
2SC504M	128
2SC504OR	128

PART NUMBER	NTE REPLACEMENT
2SC504R	128
2SC504X	128
2SC505	154
2SC505-0	154
2SC505-ORG	198
2SC505-R	154
2SC505-RED	198
2SC505A	198
2SC505B	198
2SC505C	198
2SC505D	198
2SC505E	198
2SC505F	198
2SC505G	198
2SC505GN	198
2SC505H	198
2SC505J	198
2SC505K	198
2SC505L	198
2SC505M	198
2SC505O	198
2SC505OR	198
2SC505R	198
2SC505X	198
2SC505Y	198
2SC506	154
2SC506-0	154
2SC506-ORG	198
2SC506-R	154
2SC506-RED	198
2SC506A	198
2SC506B	198
2SC506C	198
2SC506D	198
2SC506E	198
2SC506F	198
2SC506G	198
2SC506GN	198
2SC506H	198
2SC506J	198
2SC506K	198
2SC506L	198
2SC506M	198
2SC506O	198
2SC506OR	198
2SC506R	198
2SC506X	198
2SC506Y	198
2SC507	154
2SC507-0	154
2SC507-O	198
2SC507-R	154
2SC507-Y	154
2SC507A	198
2SC507B	198
2SC507C	198
2SC507D	198
2SC507E	198
2SC507F	198
2SC507G	198
2SC507GN	198
2SC507H	198
2SC507J	198
2SC507K	198
2SC507L	198
2SC507M	198
2SC507OR	198
2SC507R	198
2SC507X	198
2SC507Y	198
2SC508	175
2SC509	289A
2SC509(O)	289A
2SC509(Y)	289A
2SC509-Y	289A
2SC509G-0	289
2SC509G-Y	289
2SC510	324
2SC510A	198
2SC510B	198
2SC510C	198
2SC510D	198
2SC510E	198
2SC510F	198
2SC510G	198
2SC510GN	198
2SC510H	198
2SC510J	198
2SC510K	198
2SC510L	198
2SC510M	198
2SC510OR	198
2SC510R	198
2SC510X	198
2SC510Y	198
2SC511	198
2SC511A	198
2SC511B	198
2SC511C	198
2SC511D	198
2SC511E	198
2SC511F	198
2SC511G	198
2SC511GN	198
2SC511H	198
2SC511J	198
2SC511K	198
2SC511L	198
2SC511M	198
2SC511OR	198
2SC511R	198
2SC511X	198
2SC511Y	198
2SC512	324

PART NUMBER	NTE REPLACEMENT
2SC512-0	128
2SC512-O	128
2SC512-ORG	128
2SC512-R	128
2SC512-RED	128
2SC512A	128
2SC512B	128
2SC512C	128
2SC512D	128
2SC512E	128
2SC512F	128
2SC512G	128
2SC512GN	128
2SC512H	128
2SC512J	128
2SC512K	128
2SC512L	128
2SC512M	128
2SC512O	128
2SC512OR	128
2SC512R	128
2SC512X	128
2SC512Y	128
2SC513	128
2SC513-0	128
2SC513-O	128
2SC513-ORG	128
2SC513-R	128
2SC513-RED	128
2SC513A	128
2SC513B	128
2SC513C	128
2SC513D	128
2SC513E	128
2SC513F	128
2SC513G	128
2SC513GN	128
2SC513H	128
2SC513J	128
2SC513K	128
2SC513L	128
2SC513M	128
2SC513O	128
2SC513OR	128
2SC513R	128
2SC513X	128
2SC513Y	128
2SC514	124
2SC514A	124
2SC514B	124
2SC514C	124
2SC514D	124
2SC514E	124
2SC514F	124
2SC514G	124
2SC514GN	124
2SC514H	124
2SC514J	124
2SC514K	124
2SC514L	124
2SC514M	124
2SC514OR	124
2SC514R	124
2SC514X	124
2SC514Y	124
2SC515	124
2SC515-OR	198
2SC515A	124
2SC515A(BK)	124
2SC515AM	124
2SC515AX	124
2SC515AY	124
2SC515B	124
2SC515BK	124
2SC515C	124
2SC515D	124
2SC515E	124
2SC515F	124
2SC515G	124
2SC515GN	124
2SC515H	124
2SC515J	124
2SC515K	124
2SC515L	124
2SC515M	124
2SC515OR	124
2SC515R	124
2SC515X	124
2SC515Y	124
2SC516	128
2SC516A	128
2SC516B	128
2SC516C	128
2SC516D	128
2SC516E	128
2SC516F	128
2SC516G	128
2SC516GN	128
2SC516H	128
2SC516J	128
2SC516K	128
2SC516L	128
2SC516M	128
2SC516OR	128
2SC516R	128
2SC516X	128
2SC516Y	128
2SC517	237
2SC517-OR	237
2SC517A	237
2SC517B	237
2SC517C	237
2SC517D	237
2SC517E	237
2SC517F	237
2SC517G	237
2SC517GN	237
2SC517H	237
2SC517J	237
2SC517K	237
2SC517L	237
2SC517M	237
2SC517OR	237
2SC517R	237
2SC517S	224
2SC517X	237
2SC517Y	237
2SC518	198
2SC518A	198
2SC519	162
2SC519A	162
2SC520	130
2SC520A	130
2SC521	130
2SC521A	130
2SC522-0	225
2SC522-R	225
2SC523-ORG	225
2SC523-RED	225
2SC523O	225
2SC523R	225
2SC524-0	225
2SC524-ORG	225
2SC524-R	225
2SC524-RED	225
2SC524O	225
2SC524R	225
2SC525	237
2SC525-0	237
2SC525-ORG	237
2SC525-R	237
2SC525-RED	237
2SC525O	237
2SC525R	237
2SC526	174
2SC526-0	196
2SC526A	198
2SC526B	198
2SC526C	198
2SC526D	198
2SC526E	198
2SC526F	198
2SC526G	198
2SC526GN	198
2SC526H	198
2SC526J	198
2SC526K	198
2SC526L	198
2SC526M	198
2SC526OR	198
2SC526R	198
2SC526X	198
2SC526Y	198
2SC527	161
2SC528	199
2SC529	85
2SC529A	85
2SC529B	85
2SC529C	85
2SC529D	85
2SC529E	85
2SC529F	85
2SC529G	85
2SC529GN	85
2SC529H	85
2SC529J	85
2SC529K	85
2SC529L	85
2SC529M	85
2SC529OR	85
2SC529R	85
2SC529X	85
2SC529Y	85
2SC530	123AP
2SC531	123AP
2SC532	123AP
2SC533	123AP
2SC534	123AP
2SC535	107
2SC535(B)	107
2SC535-OR	107
2SC535A	107
2SC535ABC	107
2SC535AL	107
2SC535B	107
2SC535B(IR)	107
2SC535C	107
2SC535D	107
2SC535E	107
2SC535F	107
2SC535G	107
2SC535GN	107
2SC535H	107
2SC535J	107
2SC535K	107
2SC535L	107
2SC535M	107
2SC535OR	107
2SC535R	107
2SC535X	107
2SC535Y	107
2SC536	85
2SC536(C)	289A
2SC536(D)	289A
2SC536(E)	289A
2SC536(IR)	199
2SC536-D	289A
2SC536-E	289A
2SC536-E-NP	85
2SC536-F	289A
2SC536-F-NP	85
2SC536-G	289A
2SC536-G-NP	85
2SC536-OR	289A
2SC536,E	199
2SC536,F	199
2SC536A	85
2SC536A(3RD IF)	233
2SC536A(3RD-IF)	199
2SC536AF	289A
2SC536AG	289A
2SC536AQ	290A
2SC536B	85
2SC536C	85
2SC536D	85
2SC536DK	289A
2SC536E	85
2SC536E,F	199
2SC536ED	289A
2SC536EH	289A
2SC536EJ	289A
2SC536EK	85
2SC536EN	289A
2SC536EP	289A
2SC536ER	289A
2SC536ET	289A
2SC536EZ	289A
2SC536F	85
2SC536F1	289A
2SC536F2	289A
2SC536FC	289A
2SC536FG	199
2SC536FNP	199
2SC536FP	289A
2SC536FS	289A
2SC536FS6	289A
2SC536FZ	289A
2SC536G	85
2SC536G1	289A
2SC536G2	289A
2SC536G-1	289A
2SC536GF	289A
2SC536GJ	289A
2SC536GK	289A
2SC536GL	289A
2SC536GM	289A
2SC536GN	289A
2SC536GNP	199
2SC536GP	289A
2SC536GT	289A
2SC536GV	289A
2SC536GY	289A
2SC536GZ	289A
2SC536H	85
2SC536J	289A
2SC536K	85
2SC536KE	85
2SC536KF	85
2SC536KG	85
2SC536KNP-AA	85
2SC536KNP-T	85
2SC536KNPFT	85
2SC536L	289A
2SC536M	289A
2SC536N	85
2SC536NP	85
2SC536NP(E)	85
2SC536NP(F)	85
2SC536NP(G)	85
2SC536NP-T	85
2SC536NPE	85
2SC536NPF	85
2SC536NPG	85
2SC536OR	289A
2SC536P	85
2SC536PF	85
2SC536Q	85
2SC536R	289A
2SC536SE	85
2SC536SEZ	85
2SC536SF	85
2SC536SFZ	85
2SC536SP	85
2SC536SP(F)	85
2SC536SP(G)	85
2SC536SP-AC	85
2SC536SPE	85
2SC536SPF	85
2SC536SPG	85
2SC536W	289A
2SC536X	289A
2SC536XL	289A
2SC536Y	85
2SC537	289A
2SC537(G)	289A
2SC537-EV	289A
2SC537ALC	289A
2SC537B	289A
2SC537B(IR)	319P
2SC537BK	289A
2SC537C	289A
2SC537C7	289A
2SC537D	289A
2SC537D1	289A
2SC537E	289A
2SC537EV	289A
2SC537F	289A
2SC537F-C7	289A
2SC537FC7	123AP
2SC537FJ	289A
2SC537FK	289A
2SC537FV	289A
2SC537G	289A
2SC537G1	289A
2SC537G2	289A
2SC537GF	289A
2SC537GFL	289A
2SC537GI	289A
2SC537H	289A
2SC537HT	289A
2SC537W	289A
2SC537WF	289A
2SC538	123AP
2SC538(P)	123AP
2SC538(R)	123AP
2SC538-Q	123AP
2SC538A	123AP
2SC538A(IR)	199
2SC538A(Q)	123AP
2SC538A-P	123AP
2SC538A-R	123AP
2SC538AQ	123AP
2SC538AR	123AP
2SC538AS	123AP
2SC538K	123AP
2SC538P	123AP
2SC538Q	123AP
2SC538R	123AP
2SC538S	123AP
2SC538T	123AP
2SC539	123AP
2SC539(L)(K)	199
2SC539(R)	199
2SC539K	123AP
2SC539L	123AP
2SC539R	123AP
2SC539S	123AP
2SC539T	199
2SC540	123AP
2SC540A	199
2SC540B	199
2SC540C	199
2SC540D	199
2SC540E	199
2SC540F	199
2SC540G	199
2SC540GN	199
2SC540H	199
2SC540J	199
2SC540K	199
2SC540L	199
2SC540M	199
2SC540OR	199
2SC540R	199
2SC540X	199
2SC540Y	199
2SC541	186
2SC542	186
2SC543	152
2SC543A	229
2SC543B	229
2SC543C	229
2SC543D	229
2SC543E	229
2SC543F	229
2SC543G	229
2SC543GN	229
2SC543H	229
2SC543J	229
2SC543K	229
2SC543L	229
2SC543M	229
2SC543OR	229
2SC543R	229
2SC543X	229
2SC543Y	229
2SC544	108
2SC544A	229
2SC544AG	229
2SC544B	229
2SC544C	108
2SC544D	108
2SC544D(VHF)	229
2SC544E	108
2SC544F	229
2SC544G	229
2SC544GN	229
2SC544H	229
2SC544J	229
2SC544K	229
2SC544L	229
2SC544M	229
2SC544OR	229
2SC544R	229
2SC544X	229
2SC544Y	229
2SC545	107
2SC545A	107
2SC545B	107
2SC545C	107
2SC545D	107
2SC545E	107
2SC546	161
2SC546K	161
2SC547	186
2SC548	186
2SC549	187
2SC550	186
2SC551	152
2SC552	152
2SC553	152
2SC554	152
2SC555	278
2SC556	229
2SC558	389
2SC559	293
2SC560	128
2SC560A	198
2SC560B	198
2SC560C	198
2SC560D	198
2SC560E	198
2SC560F	198
2SC560G	198
2SC560GN	198
2SC560H	198
2SC560J	198
2SC560K	198
2SC560L	198
2SC560M	198
2SC560OR	198
2SC560R	198
2SC560X	198
2SC560Y	198
2SC561	108
2SC561-OR	108
2SC561A	108
2SC561B	108
2SC561C	108
2SC561D	108
2SC561E	108
2SC561F	108
2SC561G	108
2SC561GN	108
2SC561H	108
2SC561J	108
2SC561K	108
2SC561L	108
2SC561M	108
2SC561OR	108
2SC561R	108
2SC561X	108
2SC561Y	108
2SC562	161
2SC562-0	161
2SC562-OR	161
2SC562A	161
2SC562B	161
2SC562C	161
2SC562D	161
2SC562E	161
2SC562F	161
2SC562G	161
2SC562GN	161
2SC562H	161
2SC562J	161
2SC562K	161
2SC562L	161
2SC562M	161
2SC562OR	161
2SC562R	161
2SC562X	161
2SC562Y	161
2SC563	161
2SC563(3RDIF)	161
2SC563-F	161
2SC563-G	161
2SC563-OR	161
2SC563A	161
2SC563A(3RDIF)	161
2SC563B	161
2SC563C	161
2SC563D	161
2SC563E	85
2SC563F	85
2SC563G	85
2SC563GN	161
2SC563H	161
2SC563J	161
2SC563K	161
2SC563L	161
2SC563M	161
2SC563NP	85
2SC563OR	161
2SC563R	161
2SC563X	161
2SC563Y	161
2SC564	128
2SC564(Q)	128
2SC564(Q)(R)	128
2SC564A	128
2SC564AQ	290A
2SC564B	128
2SC564C	128
2SC564D	128
2SC564E	128
2SC564F	128
2SC564G	128
2SC564GN	128
2SC564H	128
2SC564J	128
2SC564K	128
2SC564L	128
2SC564M	128
2SC564OR	128
2SC564P	128
2SC564PL	128
2SC564Q	128
2SC564QC	128
2SC564R	128
2SC564S	128
2SC564T	128
2SC564X	128
2SC564Y	128
2SC565	172A
2SC566	123AP
2SC566A	192
2SC566B	192
2SC566C	192
2SC566D	192
2SC566E	192
2SC566F	192
2SC566G	192
2SC566GN	192
2SC566H	192
2SC566J	192
2SC566K	192
2SC566L	192
2SC566M	192
2SC566OR	192
2SC566R	192
2SC566X	192
2SC566Y	192
2SC567	161
2SC567A	108
2SC567B	108
2SC567C	108
2SC567D	108
2SC567E	108
2SC567F	108
2SC567G	108
2SC567GN	108
2SC567H	108
2SC567J	108
2SC567K	108
2SC567L	108
2SC567M	108
2SC567OR	108
2SC567R	108
2SC567X	108
2SC567Y	108
2SC568	108
2SC568A	108
2SC568B	108
2SC568C	108
2SC568D	108
2SC568E	108
2SC568F	108
2SC568G	108
2SC568GN	108
2SC568H	108
2SC568J	108
2SC568K	108
2SC568L	108
2SC568M	108
2SC568OR	108
2SC568R	108
2SC568X	108
2SC568Y	108
2SC569	123A
2SC570	123A
2SC571	195A
2SC572	186
2SC573	152
2SC575	128
2SC576	123A
2SC577	123A
2SC578	194
2SC579	172A
2SC580	195A
2SC580A	198
2SC580B	198
2SC580C	198
2SC580D	198
2SC580E	198
2SC580F	198
2SC580G	198
2SC580GN	198
2SC580H	198
2SC580J	198
2SC580K	198
2SC580L	198
2SC580M	198
2SC580OR	198
2SC580R	198
2SC580T	198
2SC580X	198
2SC580Y	198
2SC581	161
2SC582	124
2SC582(BX)(BY)	124
2SC582-OR	124
2SC582_B	124
2SC582A	124
2SC582B	124
2SC582BC	124
2SC582BX	124
2SC582BY	124
2SC582C	124
2SC582D	124
2SC582E	124
2SC582EA	124
2SC582F	124
2SC582G	124
2SC582GN	124
2SC582H	124
2SC582J	124
2SC582K	124
2SC582L	124
2SC582M	124
2SC582OR	124
2SC582R	124
2SC582X	124
2SC582Y	124
2SC583	278
2SC583C	278
2SC584	186A
2SC585	152
2SC586	162
2SC587	123AP
2SC587A	123AP
2SC587B	199
2SC587C	199
2SC587D	199
2SC587E	199
2SC587F	199
2SC587G	199
2SC587GN	199
2SC587H	199
2SC587J	199
2SC587K	199
2SC587L	199
2SC587M	199
2SC587OR	199
2SC587R	199
2SC587X	199
2SC587Y	199
2SC588	123AP
2SC588A	293
2SC588B	293
2SC588C	293
2SC588D	293
2SC588E	293
2SC588F	293
2SC588G	293
2SC588GN	293
2SC588H	293
2SC588J	293
2SC588K	293
2SC588L	293
2SC588M	293
2SC588OR	293
2SC588R	293
2SC588X	293
2SC588Y	293
2SC589	154
2SC589-Y	289
2SC589A	171
2SC589B	171
2SC589C	171
2SC589D	171
2SC589E	171
2SC589F	171
2SC589G	171
2SC589GN	171
2SC589H	171
2SC589J	171
2SC589K	171
2SC589L	171
2SC589M	171
2SC589OR	171
2SC589R	171
2SC589X	171
2SC589Y	171
2SC590	289
2SC590A	128
2SC590B	128
2SC590C	128
2SC590D	128
2SC590E	128
2SC590F	128
2SC590G	128
2SC590GN	128
2SC590H	128
2SC590J	128
2SC590K	128
2SC590L	128
2SC590M	128
2SC590OR	128
2SC590X	128
2SC590Y	289
2SC591	198
2SC591A	198
2SC591B	198
2SC591C	198
2SC591D	198
2SC591E	198
2SC591F	198
2SC591G	198
2SC591GN	198
2SC591H	198
2SC591J	198
2SC591K	198
2SC591L	198
2SC591M	198
2SC591OR	198
2SC591R	198
2SC591X	198
2SC591Y	198
2SC592	186
2SC593	123AP
2SC593F	199
2SC593G	199
2SC594	128
2SC594-0	293
2SC594-R	293
2SC594-Y	293
2SC594A	293
2SC594B	293
2SC594C	293
2SC594D	293
2SC594E	293
2SC594F	293
2SC594G	293
2SC594GN	293
2SC594H	293
2SC594J	293
2SC594K	293
2SC594L	293
2SC594M	293
2SC594OR	293
2SC594R	293
2SC594X	293
2SC594Y	293
2SC595	123AP
2SC595A	192
2SC595B	192
2SC595C	192

PART NUMBER	NTE REPLACEMENT
2SC595D	192
2SC595E	192
2SC595F	192
2SC595G	192
2SC595GN	192
2SC595H	192
2SC595J	192
2SC595K	192
2SC595L	192
2SC595M	192
2SC595OR	192
2SC595R	192
2SC595X	192
2SC595Y	192
2SC596	123AP
2SC596A	192
2SC596B	192
2SC596C	192
2SC596D	192
2SC596E	192
2SC596F	192
2SC596G	192
2SC596GN	192
2SC596H	192
2SC596J	192
2SC596K	192
2SC596L	192
2SC596M	192
2SC596OR	192
2SC596R	192
2SC596X	192
2SC596Y	192
2SC597	235
2SC598	186
2SC599	152
2SC600	152
2SC601	311
2SC601N	161
2SC602	161
2SC603	172A
2SC603-E	289A
2SC603-F	289A
2SC604	107
2SC605	313
2SC605(L)	313
2SC605(Q)	313
2SC605-OR	313
2SC605A	313
2SC605B	313
2SC605C	313
2SC605D	313
2SC605E	313
2SC605F	313
2SC605G	313
2SC605GN	313
2SC605H	313
2SC605J	313
2SC605K	313
2SC605L	313
2SC605M	313
2SC605OR	313
2SC605Q	313
2SC605R	313
2SC605TW	313
2SC605X	313
2SC605Y	313
2SC606	313
2SC606(VHF)	313
2SC606A	313
2SC606B	313
2SC606C	313
2SC606D	313
2SC606E	313
2SC606F	313
2SC606G	313
2SC606GN	313
2SC606H	313
2SC606J	313
2SC606K	313
2SC606L	313
2SC606M	313
2SC606N	313
2SC606OR	313
2SC606R	313
2SC606X	313
2SC606Y	313
2SC607	128
2SC608	237
2SC608A	195A
2SC608AA	195A
2SC608B	195A
2SC608C	195A
2SC608D	195A
2SC608E	237
2SC608F	195A
2SC608G	195A
2SC608GN	195A
2SC608H	195A
2SC608J	195A
2SC608K	195A
2SC608L	195A
2SC608M	195A
2SC6080R	195A
2SC608R	195A
2SC608T	237
2SC608X	195A
2SC608Y	195A
2SC609	237
2SC609-OR	237
2SC609A	237
2SC609B	237
2SC609C	237
2SC609D	237
2SC609E	237
2SC609F	237
2SC609G	237
2SC609GN	237
2SC609H	237
2SC609J	237
2SC609K	237
2SC609L	237
2SC609M	237
2SC609OR	237
2SC609R	237
2SC609T	237
2SC609X	237
2SC609Y	237
2SC610A	128
2SC610B	128
2SC610C	128
2SC610D	128
2SC610E	128
2SC610F	128
2SC610G	128
2SC610GN	128
2SC610H	128
2SC610J	128
2SC610K	128
2SC610L	128
2SC610M	128
2SC610OR	128
2SC610R	128
2SC610X	128
2SC610Y	128
2SC611	108
2SC611A	108
2SC611B	108
2SC611C	108
2SC611D	108
2SC611E	108
2SC611F	108
2SC611G	108
2SC611GN	108
2SC611H	108
2SC611J	108
2SC611K	108
2SC611L	108
2SC611M	108
2SC611OR	108
2SC611R	108
2SC611X	108
2SC611Y	108
2SC612	108
2SC612A	108
2SC612B	108
2SC612C	108
2SC612D	108
2SC612E	108
2SC612F	108
2SC612G	108
2SC612GN	108
2SC612H	108
2SC612J	108
2SC612K	108
2SC612L	108
2SC612M	108
2SC612OR	108
2SC612R	108
2SC612X	108
2SC612Y	108
2SC613	108
2SC613A	108
2SC613B	108
2SC613C	108
2SC613D	108
2SC613E	108
2SC613F	108
2SC613G	108
2SC613GN	108
2SC613H	108
2SC613J	108
2SC613K	108
2SC613L	108
2SC613M	108
2SC613OR	108
2SC613R	108
2SC613X	108
2SC613Y	108
2SC614	195A
2SC614A	128
2SC614B	128
2SC614C	195A
2SC614D	195A
2SC614E	195A
2SC614F	195A
2SC614G	195A
2SC614GN	128
2SC614H	128
2SC614J	128
2SC614K	128
2SC614L	128
2SC614M	128
2SC614OR	128
2SC614R	128
2SC614X	128
2SC614Y	128
2SC615	195A
2SC615-OR	195A
2SC615A	195A
2SC615B	195A
2SC615C	195A
2SC615D	195A
2SC615E	195A
2SC615F	195A
2SC615G	195A
2SC615GN	195A
2SC615H	195A
2SC615J	195A
2SC615K	195A
2SC615L	195A
2SC615M	195A
2SC615OR	195A
2SC615R	195A
2SC615X	195A
2SC615Y	195A
2SC616	224
2SC617	224
2SC618	161
2SC618A	161
2SC619	85
2SC619(B)	123AP
2SC619(C)	123AP
2SC619-C	85
2SC619-D	85
2SC619-E	85
2SC619A	123AP
2SC619B	123AP
2SC619C	85
2SC619D	85
2SC619E	85
2SC619F	123AP
2SC619G	123AP
2SC619GN	123AP
2SC619H	123AP
2SC619J	123AP
2SC619K	123AP
2SC619L	123AP
2SC619M	123AP
2SC619OR	123AP
2SC619R	123AP
2SC619X	123AP
2SC619Y	123AP
2SC620	85
2SC620(C)	123AP
2SC620(D)	123AP
2SC620-C	85
2SC620-D	85
2SC620-E	85
2SC620-OR	123AP
2SC620A	123AP
2SC620B	123AP
2SC620C	85
2SC620CD	123AP
2SC620D	85
2SC620DE	123AP
2SC620E	85
2SC620F	123AP
2SC620G	123AP
2SC620GN	123AP
2SC620H	123AP
2SC620J	123AP
2SC620K	123AP
2SC620L	123AP
2SC620M	123AP
2SC620OR	123AP
2SC620R	85
2SC620X	123AP
2SC620Y	123AP
2SC621	123AP
2SC621A	192
2SC621B	192
2SC621C	192
2SC621D	192
2SC621E	192
2SC621F	192
2SC621G	192
2SC621GN	192
2SC621H	192
2SC621J	192
2SC621K	192
2SC621L	192
2SC621M	192
2SC621OR	192
2SC621R	192
2SC621X	192
2SC621Y	192
2SC622	123AP
2SC622A	192
2SC622B	192
2SC622C	192
2SC622D	192
2SC622E	192
2SC622F	192
2SC622G	192
2SC622GN	192
2SC622H	192
2SC622J	192
2SC622K	192
2SC622L	192
2SC622M	192
2SC622OR	192
2SC622R	192
2SC622X	192
2SC622Y	192
2SC623	123A
2SC624	123A
2SC626	123AP
2SC627	154
2SC628	128
2SC628E	123AP
2SC628F	123AP
2SC629	107
2SC629-31	229
2SC629-41	229
2SC629A	229
2SC629B	229
2SC629C	229
2SC629D	229
2SC629E	229
2SC629F	229
2SC629G	229
2SC629GN	229
2SC629H	229
2SC629J	229
2SC629K	229
2SC629L	229
2SC629M	229
2SC629OR	229
2SC629R	229
2SC629X	229
2SC629Y	229
2SC631	85
2SC631A	85
2SC631B	85
2SC631C	85
2SC631D	85
2SC631E	85
2SC631F	85
2SC631G	85
2SC631GN	85
2SC631H	85
2SC631J	85
2SC631K	85
2SC631L	85
2SC631M	85
2SC6310R	85
2SC631R	85
2SC631X	85
2SC631Y	85
2SC632	85
2SC632(1)	85
2SC632-OR	85
2SC632A	85
2SC632B	85
2SC632C	85
2SC632D	85
2SC632E	85
2SC632F	85
2SC632G	85
2SC632GN	85
2SC632H	85
2SC632J	85
2SC632K	85
2SC632L	85
2SC632M	85
2SC632OR	85
2SC632R	85
2SC632X	85
2SC632Y	85
2SC633	85
2SC633-7	85
2SC633-OR	85
2SC633A	85
2SC633A(IR)	293
2SC633B	85
2SC633C	85
2SC633D	85
2SC633E	85
2SC633F	85
2SC633GN	85
2SC633J	85
2SC633K	85
2SC633L	85
2SC633M	85
2SC633OR	85
2SC633R	85
2SC633X	85
2SC633Y	85
2SC634	85
2SC634(2)	85
2SC634-0	85
2SC634-OR	85
2SC634-SP	85
2SC634-SP8	85
2SC634A	85
2SC634A(IR)	293
2SC634AK	85
2SC634AL	85
2SC634AXL	85
2SC634B	85
2SC634C	85
2SC634D	85
2SC634E	85
2SC634F	85
2SC634G	85
2SC634GN	85
2SC634H	85
2SC634J	85
2SC634K	85
2SC634L	85
2SC634M	85
2SC634OR	85
2SC634R	85
2SC634SP	85
2SC634SP8	85
2SC634SP-8	85
2SC634X	85
2SC634Y	85
2SC635	16003
2SC635A	123AP
2SC636	16003
2SC636P	85
2SC637	16002
2SC638	16002
2SC638C	152
2SC638R	85
2SC639	123A
2SC640	123AP
2SC640A	199
2SC640B	123AP
2SC640C	199
2SC640D	199
2SC640E	199
2SC640F	199
2SC640G	199
2SC640GN	199
2SC640J	199
2SC640K	199
2SC640L	199
2SC640M	199
2SC640R	199
2SC640X	199
2SC641	85
2SC641A	85
2SC641D	85
2SC641E	85
2SC641F	85
2SC641G	85
2SC641GN	85
2SC641H	85
2SC641J	85
2SC641K	85
2SC641L	85
2SC641M	85
2SC6410R	85
2SC641R	85
2SC641X	85
2SC641Y	85
2SC642	164
2SC642A	164
2SC643	238
2SC643-OR	238
2SC643A	238
2SC643B	238
2SC643C	238
2SC643D	238
2SC643E	238
2SC643F	238
2SC643G	238
2SC643GN	238
2SC643H	238
2SC643J	238
2SC643K	238
2SC643L	238
2SC643M	238
2SC643OR	238
2SC643R	238
2SC643X	238
2SC643Y	238
2SC644	199
2SC644(F)	199
2SC644(H)	199
2SC644(IR)	199
2SC644(R)	199
2SC644(R,S)	199
2SC644(S)	199
2SC644-OR	199
2SC644A	199
2SC644B	199
2SC644C	199
2SC644D	199
2SC644E	199
2SC644F	199
2SC644F(H)(S)	199
2SC644FH	199
2SC644FHS	199
2SC644FR	199
2SC644FS	199
2SC644G	199
2SC644GN	199
2SC644H	199
2SC644H(S)	199
2SC644HR	199
2SC644HS	199
2SC644J	199
2SC644K	199
2SC644L	199
2SC644M	199
2SC644OR	199
2SC644P	199
2SC644PJ	199
2SC644Q	199
2SC644R	199
2SC644RST	199
2SC644S	199
2SC644T	199
2SC644X	199
2SC644Y	199
2SC645	107
2SC645-OR	107
2SC645A	107
2SC645B	107
2SC645B-1	107
2SC645C	107
2SC645D	107
2SC645E	107
2SC645F	107
2SC645G	107
2SC645GN	107
2SC645GR	107
2SC645H	107
2SC645J	107
2SC645K	107
2SC645L	107
2SC645M	107
2SC645N	107
2SC6450R	107
2SC645R	107
2SC645V	107
2SC645X	107
2SC645Y	107
2SC647	130
2SC647Q	130
2SC647R	130
2SC648	199
2SC648A	108
2SC648B	108
2SC648C	108
2SC648D	108
2SC648E	108
2SC648F	108
2SC648G	108
2SC648H	199
2SC648J	108
2SC648K	108
2SC648L	108
2SC648M	108
2SC6480R	108
2SC648R	108
2SC648X	108
2SC648Y	108
2SC649	108
2SC649A	108
2SC649B	108
2SC649C	108
2SC649D	108
2SC649E	108
2SC649F	108
2SC649G	108
2SC649GN	108
2SC649H	108
2SC649J	108
2SC649K	108
2SC649L	108
2SC649M	108
2SC649OR	108
2SC649R	108
2SC649X	108
2SC649Y	108
2SC650	199
2SC650-OR	199
2SC650-Y	199
2SC650A	199
2SC650B	199
2SC650C	199
2SC650D	199
2SC650E	199
2SC650F	199
2SC650G	199
2SC650GN	199
2SC650H	199
2SC650J	199
2SC650K	199
2SC650L	199
2SC650M	199
2SC650OR	199
2SC650R	199
2SC650X	199
2SC650Y	199
2SC651	311
2SC652	311
2SC653	161
2SC653C	198
2SC653H	198
2SC653L	198
2SC654	123AP
2SC654A	192
2SC654B	192
2SC654C	192
2SC654D	192
2SC654E	192
2SC654F	192
2SC654G	192
2SC654GN	192
2SC654H	192
2SC654J	192
2SC654K	192
2SC654L	192
2SC654M	192
2SC654OR	192
2SC654R	192
2SC654X	192
2SC654Y	192
2SC655	123AP
2SC655A	199
2SC655B	199
2SC655C	199
2SC655D	199
2SC655E	199
2SC655F	199
2SC655G	199
2SC655GN	199
2SC655H	199
2SC655J	199
2SC655K	199
2SC655L	199
2SC655M	199
2SC6550R	199
2SC655R	199
2SC655X	199
2SC655Y	199
2SC656	107
2SC656A	108
2SC656B	108
2SC656C	108
2SC656D	108
2SC656E	108
2SC656F	108
2SC656G	108
2SC656GN	108
2SC656H	108
2SC656J	108
2SC656K	108
2SC656L	108
2SC656M	108
2SC6560R	108
2SC656R	108
2SC656X	108
2SC656Y	108
2SC657	107
2SC657A	229
2SC657B	229
2SC657C	229
2SC657D	229
2SC657E	229
2SC657F	229
2SC657G	229
2SC657GN	229
2SC657H	229
2SC657J	229
2SC657K	229
2SC657L	229
2SC657M	229
2SC6570R	229
2SC657R	229
2SC657X	229
2SC657Y	229
2SC658	108
2SC658A	108
2SC658B	108
2SC658C	108
2SC658D	108
2SC658E	108
2SC658F	108
2SC658G	108
2SC658GN	108
2SC658H	108
2SC658J	108
2SC658K	108
2SC658L	108
2SC658M	108
2SC6580R	108
2SC658R	108
2SC658X	108
2SC658Y	108
2SC659	108
2SC659A	108
2SC659B	108
2SC659C	108
2SC659D	108
2SC659E	108
2SC659F	108
2SC659G	108
2SC659GN	108
2SC659H	108
2SC659J	108
2SC659K	108
2SC659L	108
2SC659M	108
2SC659OR	108
2SC659R	108
2SC659X	108
2SC659Y	108
2SC660	161
2SC661	161
2SC662	108
2SC662A	108
2SC662B	108
2SC662C	108
2SC662D	108
2SC662E	108
2SC662F	108
2SC662G	108
2SC662GN	108
2SC662H	108
2SC662J	108
2SC662K	108
2SC662L	108
2SC662M	108
2SC6620R	108
2SC662R	108
2SC662X	108
2SC662Y	108
2SC663	161
2SC663A	319P
2SC663B	319P
2SC663C	319P
2SC663D	319P
2SC663E	319P
2SC663F	319P
2SC663G	319P
2SC663GN	319P
2SC663H	319P
2SC663J	319P
2SC663K	319P
2SC663L	319P
2SC663M	319P
2SC6630R	319P
2SC663R	319P
2SC663X	319P
2SC663Y	319P
2SC664	162
2SC664(B)	162
2SC664(C)	162
2SC664-OR	162
2SC664A	162
2SC664B	162
2SC664C	162
2SC664D	162
2SC664E	162
2SC664F	162
2SC664L	162
2SC664OR	162
2SC664R	162
2SC664Y	162
2SC665	280
2SC665H	280
2SC665HA	280
2SC665HB	280
2SC666C	129
2SC667	161
2SC668	107
2SC668(C)	107
2SC668(D)	107
2SC668-0	107
2SC668-OR	107
2SC668A	107
2SC668B	107

PART NUMBER	NTE REPLACEMENT
2SC668B1	107
2SC668BC2	107
2SC668C	107
2SC668C1	107
2SC668C2	107
2SC668CD	107
2SC668D	107
2SC668D0	107
2SC668D1	107
2SC668DE	107
2SC668D0	107
2SC668DV	107
2SC668DX	107
2SC668DZ	107
2SC668E	107
2SC668E1	107
2SC668E2	107
2SC668EP	107
2SC668EV	107
2SC668EX	107
2SC668F	107
2SC668G	107
2SC668GN	107
2SC668H	107
2SC668K	107
2SC668L	107
2SC668M	107
2SC668QR	107
2SC668R	107
2SC668SP	107
2SC668X	107
2SC668Y	107
2SC669	373
2SC669AB	373
2SC669C	373
2SC669D	373
2SC670	124
2SC673	290A
2SC673(B)	161
2SC673B	161
2SC673C	290A
2SC673C2	161
2SC673D	161
2SC674	107
2SC674(D)	107
2SC674(F)	107
2SC674(G)	107
2SC674-B	107
2SC674-F	107
2SC674B	107
2SC674C	107
2SC674CK	107
2SC674CL	107
2SC674CV	107
2SC674CZ	107
2SC674D	107
2SC674E	107
2SC674F	107
2SC674G	107
2SC674V	107
2SC675	283
2SC676	198
2SC677	162
2SC678	130
2SC680	175
2SC680(A)	175
2SC680A	175
2SC680B	175
2SC680C	175
2SC680G	175
2SC680GN	175
2SC680H	175
2SC680J	175
2SC680K	175
2SC680L	175
2SC680M	175
2SC680R	175
2SC680X	175
2SC681	283
2SC681(A)	283
2SC681(B)	283
2SC681A	283
2SC681AYL	283
2SC681B	283
2SC681YL	283
2SC682	161
2SC682(B)	161
2SC682-OR	161
2SC682A	161
2SC682A(IR)	229
2SC682B	161
2SC682C	161
2SC682D	161
2SC682E	161
2SC682F	161
2SC682G	161
2SC682GN	161
2SC682H	161
2SC682J	161
2SC682K	161
2SC682L	161
2SC682M	161
2SC682OR	161
2SC682R	161
2SC682X	161
2SC682Y	161
2SC683	108
2SC683(B)	108
2SC683-OR	108
2SC683A	108
2SC683B	108
2SC683C	108
2SC683D	108
2SC683E	108
2SC683F	108
2SC683G	108
2SC683GN	108
2SC683H	108
2SC683J	108
2SC683K	108
2SC683L	108
2SC683M	108
2SC6830R	108
2SC683R	108
2SC683S	108
2SC683V	108
2SC683X	108
2SC683Y	108
2SC684	107
2SC684-OR	161
2SC684A	108
2SC684B	108
2SC684BK	108
2SC684C	161
2SC684D	161
2SC684E	161
2SC684F	108
2SC684G	161
2SC684GN	161
2SC684H	161
2SC684J	161
2SC684K	161
2SC684L	161
2SC684M	161
2SC684OR	108
2SC684R	161
2SC684X	161
2SC684Y	161
2SC685	124
2SC685(0)	124
2SC685-0	124
2SC685-O	124
2SC685A	124
2SC685ABK	124
2SC685AL	124
2SC685B	124
2SC685BK	124
2SC685C	124
2SC685D	124
2SC685E	124
2SC685F	124
2SC685G	124
2SC685GN	124
2SC685GU	124
2SC685H	124
2SC685J	124
2SC685K	124
2SC685L	124
2SC685M	124
2SC685OR	124
2SC685P	124
2SC685R	124
2SC685S	124
2SC685SY	124
2SC685X	124
2SC685Y	124
2SC686	154
2SC686A	154
2SC686B	154
2SC686C	154
2SC686D	154
2SC686E	154
2SC686F	154
2SC686G	154
2SC686GN	154
2SC686H	154
2SC686J	154
2SC686K	154
2SC686L	154
2SC686M	154
2SC686OR	154
2SC686R	154
2SC686X	154
2SC686Y	154
2SC687	162
2SC687A	283
2SC687B	283
2SC687C	283
2SC687D	283
2SC687E	283
2SC687F	283
2SC687G	283
2SC687GN	283
2SC687H	283
2SC687J	283
2SC687K	283
2SC687L	283
2SC687M	283
2SC687OR	283
2SC687R	283
2SC687X	283
2SC687Y	283
2SC688	108
2SC688A	229
2SC688B	229
2SC688C	229
2SC688D	229
2SC688E	229
2SC688F	229
2SC688G	229
2SC688GN	229
2SC688H	229
2SC688J	229
2SC688K	229
2SC688L	229
2SC688M	229
2SC688OR	229
2SC688R	229
2SC688X	229
2SC688Y	229
2SC689	123AP
2SC689A	199
2SC689B	199
2SC689C	199
2SC689D	199
2SC689E	199
2SC689G	199
2SC689GN	199
2SC689H	123AP
2SC689J	199
2SC689K	199
2SC689L	199
2SC689M	199
2SC689OR	199
2SC689R	199
2SC689X	199
2SC689Y	199
2SC690	152
2SC691	186
2SC692	186
2SC693	199
2SC693-OR	199
2SC693A	199
2SC693B	199
2SC693C	199
2SC693D	199
2SC693E	199
2SC693EB	199
2SC693ET	199
2SC693F	199
2SC693FC	199
2SC693FL	199
2SC693FP	199
2SC693FU	199
2SC693G	199
2SC693GL	199
2SC693GN	199
2SC693GS	199
2SC693GU	199
2SC693GZ	199
2SC693H	199
2SC693J	199
2SC693K	199
2SC693L	199
2SC693M	199
2SC693NP	199
2SC693OR	199
2SC693R	199
2SC693U	199
2SC693X	199
2SC693Y	199
2SC694	199
2SC694A	319P
2SC694B	319P
2SC694C	319P
2SC694D	319P
2SC694E	199
2SC694F	199
2SC694G	199
2SC694GN	319P
2SC694H	319P
2SC694J	319P
2SC694K	319P
2SC694L	319P
2SC694M	319P
2SC694OR	319P
2SC694R	319P
2SC694X	319P
2SC694Y	319P
2SC694Z	199
2SC695	107
2SC696	195A
2SC696(D)	195A
2SC696-4	195A
2SC696-OR	195A
2SC696A	195A
2SC696AA	195A
2SC696AB	195A
2SC696AD	195A
2SC696AE	195A
2SC696AF	195A
2SC696AG	195A
2SC696AH	195A
2SC696AI	195A
2SC696B	195A
2SC696BL	195A
2SC696C	195A
2SC696D	195A
2SC696E	195A
2SC696F	195A
2SC696G	195A
2SC696GN	195A
2SC696GU	195A
2SC696H	195A
2SC696I	195A
2SC696J	195A
2SC696K	195A
2SC696L	195A
2SC696M	195A
2SC696OR	195A
2SC696R	195A
2SC696U	195A
2SC696X	195A
2SC696Y	195A
2SC697	237
2SC697-OR	237
2SC697A	237
2SC697B	237
2SC697C	237
2SC697D	237
2SC697E	237
2SC697F	237
2SC697G	237
2SC697GN	237
2SC697H	237
2SC697J	237
2SC697K	237
2SC697L	237
2SC697M	237
2SC697OR	237
2SC697R	237
2SC697X	237
2SC697Y	237
2SC698	224
2SC699	192
2SC700	192
2SC701	311
2SC701A	293
2SC701B	293
2SC701C	293
2SC701D	293
2SC701E	293
2SC701F	293
2SC701G	293
2SC701GN	293
2SC701H	293
2SC701J	293
2SC701K	293
2SC701L	293
2SC701M	293
2SC701OR	293
2SC701R	293
2SC701X	293
2SC701Y	293
2SC702	123
2SC702A	293
2SC702B	293
2SC702C	293
2SC702D	293
2SC702E	293
2SC702F	293
2SC702G	293
2SC702GN	293
2SC702H	293
2SC702J	293
2SC702K	293
2SC702L	293
2SC702M	293
2SC702OR	293
2SC702R	293
2SC702X	293
2SC702Y	293
2SC703	152
2SC704	152
2SC705	107
2SC705A	108
2SC705B	107
2SC705C	107
2SC705D	107
2SC705E	107
2SC705F	107
2SC705G	108
2SC705GN	108
2SC705J	108
2SC705K	108
2SC705L	108
2SC705M	108
2SC705OR	108
2SC705R	108
2SC705TV	107
2SC705TV(3RD IF)	233
2SC705TV(3RD-IF)	123AP
2SC705TVV	108
2SC705TW	108
2SC705X	108
2SC705Y	108
2SC706	161
2SC707	107
2SC707A	108
2SC707B	108
2SC707C	108
2SC707D	108
2SC707E	108
2SC707F	108
2SC707G	108
2SC707GN	108
2SC707H	107
2SC707K	108
2SC707L	108
2SC707M	108
2SC707OR	108
2SC707R	108
2SC707X	108
2SC707Y	108
2SC708	128
2SC708(A)	128
2SC708(B)	128
2SC708(C)	128
2SC708-OR	128
2SC708A	128
2SC708AA	128
2SC708AB	128
2SC708AC	128
2SC708AH	128
2SC708AHA	128
2SC708AHB	128
2SC708AHC	128
2SC708B	128
2SC708C	128
2SC708D	128
2SC708E	128
2SC708F	128
2SC708G	128
2SC708GN	128
2SC708H	128
2SC708HA	128
2SC708HB	128
2SC708L	128
2SC708M	128
2SC708OR	128
2SC708R	128
2SC708X	128
2SC708Y	128
2SC709	85
2SC709(B)(C)	85
2SC709(C)	85
2SC709A	85
2SC709B	85
2SC709C	85
2SC709CD	85
2SC709D	85
2SC709E	85
2SC709F	85
2SC709G	85
2SC709GN	85
2SC709H	85
2SC709J	85
2SC709L	85
2SC709M	85
2SC709OR	85
2SC709X	85
2SC709Y	85
2SC710	85
2SC710(B)	85
2SC710(BCE)	85
2SC710(C)	85
2SC710(D)	85
2SC710(IR)	319P
2SC710-1	85
2SC710-2	85
2SC710-3	85
2SC710-4	85
2SC710-5	85
2SC710-13	85
2SC710-13(BCE)	85
2SC710-14	85
2SC710-14(BCE)	85
2SC710-15	85
2SC710-C	85
2SC710-D	85
2SC710-E	85
2SC710-OR	85
2SC710AL	85
2SC710B	85
2SC710B2	85
2SC710B(BCE)	85
2SC710BC	85
2SC710C	85
2SC710C(BCE)	85
2SC710D	85
2SC710D(BCE)	85
2SC710DE	85
2SC710E	85
2SC710E(BCE)	85
2SC710F	85
2SC710F(BCE)	85
2SC710G	85
2SC710GN	85
2SC710H	85
2SC710K	85
2SC710L	85
2SC710M	85
2SC710OR	85
2SC710R	85
2SC710S	85
2SC710X	85
2SC710XL	85
2SC710Y	85
2SC711	85
2SC711(D)	85
2SC711(F)	85
2SC711-OR	85
2SC711,A,F,G	85
2SC711A	85
2SC711A(E)	85
2SC711A-E	85
2SC711A-F	85
2SC711AE	85
2SC711AF	85
2SC711AG	85
2SC711AG(BCE)	199
2SC711AH(BCE)	199
2SC711AN	85
2SC711B	85
2SC711C	85
2SC711C(BCE)	85
2SC711D	85
2SC711D(BCE)	85
2SC711E	85
2SC711F	85
2SC711FG	85
2SC711G	85
2SC711GN	85
2SC711H	85
2SC711J	85
2SC711L	85
2SC711M	85
2SC711OR	85
2SC711R	85
2SC711X	85
2SC711Y	85
2SC712	85
2SC712C	85
2SC712CD	85
2SC712D	85
2SC712E	85
2SC713	85
2SC713(BCE)	85
2SC713A	85
2SC713B	85
2SC713B(BCE)	85
2SC713C	85
2SC713C(BCE)	85
2SC713D	85
2SC713D(BCE)	85
2SC713E	85
2SC713E(BCE)	85
2SC713F	85
2SC713G	85
2SC713GN	85
2SC713H	85
2SC713J	85
2SC713K	85
2SC713L	85
2SC713M	85
2SC713OR	85
2SC713R	85
2SC713X	85
2SC713Y	85
2SC714	85
2SC714(BCE)	289A
2SC714-C	85
2SC714-D	85
2SC714-E	85
2SC714A	289A
2SC714B	289A
2SC714B(BCE)	289A
2SC714C	85
2SC714C(BCE)	289A
2SC714D	85
2SC714D(BCE)	289A
2SC714E	85
2SC714F	289A
2SC714G	289A
2SC714GN	289A
2SC714H	289A
2SC714J	289A
2SC714K	289A
2SC714L	289A
2SC714M	289A
2SC714OR	289A
2SC714R	289A
2SC714X	289A
2SC714Y	289A
2SC715	85
2SC715-OR	85
2SC715B	85
2SC715C	85
2SC715D	85
2SC715E	85
2SC715F	85
2SC715G	85
2SC715GN	85
2SC715H	85
2SC715J	85
2SC715K	85
2SC715L	85
2SC715M	85
2SC715OR	85
2SC715R	85
2SC715S	85
2SC715SC	85
2SC715SD	85
2SC715SE	85
2SC715SF	85
2SC715X	85
2SC715Y	85
2SC716	289A
2SC716A	293
2SC716B	289A
2SC716C	289A
2SC716D	289A
2SC716E	289A
2SC716F	289A
2SC716G	289A
2SC716GN	289A
2SC716H	289A
2SC716J	289A
2SC716K	289A
2SC716L	289A
2SC716M	289A
2SC716OR	289A
2SC716R	289A
2SC716X	289A
2SC716Y	289A
2SC717	107
2SC717(IR)	123AP
2SC717-IL	107
2SC717B	107
2SC717BK	107
2SC717BLK	107
2SC717C	107
2SC717E	107
2SC717F	107
2SC717G	107
2SC717GN	107
2SC717H	107
2SC717K	107
2SC717L	107
2SC717M	107
2SC717TM	107
2SC717X	107
2SC718	123AP
2SC719	289
2SC719Q	289
2SC720	316
2SC721	123AP
2SC722	229
2SC723	123AP
2SC723BL	123AP
2SC724	289A
2SC724B	289A
2SC724G	289A
2SC724V	289A
2SC724X	289A
2SC725	289A
2SC725-0	289A
2SC725B	289A
2SC725G	289A
2SC725V	289A
2SC725Y	289A
2SC726	123AP
2SC727	154
2SC727A	128
2SC727B	128
2SC727C	128
2SC727D	128
2SC727E	128
2SC727F	128
2SC727G	128
2SC727GN	128
2SC727H	128
2SC727J	128
2SC727K	128
2SC727L	128
2SC727M	128
2SC727R	128
2SC727X	128
2SC727Y	128
2SC728	154
2SC728A	123AP
2SC728B	123AP
2SC728C	123AP
2SC728D	123AP
2SC728E	123AP
2SC728F	123AP
2SC728G	123AP
2SC728GN	123AP
2SC728H	123AP
2SC728J	123AP
2SC728K	123AP
2SC728L	123AP
2SC728M	123AP
2SC728OR	123AP
2SC728R	123AP
2SC728X	123AP
2SC728Y	123AP
2SC729	278
2SC731	128
2SC731R	128
2SC732	199
2SC732(BL)	199
2SC732-B	199
2SC732-BL	199
2SC732-BLU	199
2SC732-G	199
2SC732-GR	199
2SC732-GRN	199
2SC732-OR	199
2SC732-V	199
2SC732-V10	199
2SC732-VIO	199
2SC732A	199
2SC732B	199
2SC732BL	199
2SC732BL-1	199
2SC732BLU	199
2SC732C	199
2SC732D	199
2SC732E	199
2SC732F	199
2SC732G	199
2SC732GN	199
2SC732GR	199
2SC732GR/4454C	199
2SC732GRB	199
2SC732GRN	199
2SC732H	199
2SC732J	199
2SC732L	199
2SC732M	199
2SC732OR	199
2SC732R	199
2SC732S	199
2SC732V	199
2SC732V10	199
2SC732VIO	199
2SC732X	199
2SC732Y	199
2SC733	199
2SC733(GR)	199
2SC733-0	199
2SC733-B	199
2SC733-BL	199
2SC733-BLU	199
2SC733-G	199
2SC733-GR	199
2SC733-GRN	199
2SC733-O	199
2SC733-OR	199
2SC733-ORG	199
2SC733-Y	199
2SC733-YEL	199
2SC733A	199
2SC733B	199
2SC733BL	199
2SC733BLK	199
2SC733BLU	199
2SC733C	199
2SC733D	199
2SC733E	199
2SC733ER	199
2SC733F	199
2SC733G	199
2SC733GN	199
2SC733GR	199
2SC733GRN	199
2SC733H	199

PART NUMBER	NTE REPLACEMENT
2SC733J	199
2SC733K	199
2SC733L	199
2SC733M	199
2SC733O	199
2SC733OR	199
2SC733Q	199
2SC733R	199
2SC733S	199
2SC733S-BL	199
2SC733V	199
2SC733X	199
2SC733Y	199
2SC733YEL	199
2SC734	289A
2SC734(O)	289A
2SC734(R)	289A
2SC734(Y)	289A
2SC734-G	289A
2SC734-GR	289A
2SC734-GRN	289A
2SC734-O	289A
2SC734-OR	289A
2SC734-ORG	289A
2SC734-OY	289A
2SC734-RED	289A
2SC734-Y	289A
2SC734-YEL	289A
2SC734A	289A
2SC734B	289A
2SC734C	289A
2SC734D	289A
2SC734E	289A
2SC734F	289A
2SC734G	289A
2SC734GN	289A
2SC734GRN	289A
2SC734H	289A
2SC734J	289A
2SC734K	289A
2SC734K/GR	289A
2SC734L	289A
2SC734M	289A
2SC734OR	289A
2SC734R	289A
2SC734RED	289A
2SC734X	289A
2SC734YEL	289A
2SC735	85
2SC735(O)	289A
2SC735(Y)	289A
2SC735-O	289A
2SC735-GRN	289A
2SC735-OR	289A
2SC735-ORG	289A
2SC735-ORN	289A
2SC735-OY	289A
2SC735-R	289A
2SC735-RED	289A
2SC735-Y	289A
2SC735-YEL	289A
2SC735/4454C	289A
2SC735A	289A
2SC735C	289A
2SC735D	289A
2SC735E	289A
2SC735FA3	289A
2SC735GN	289A
2SC735GRN	289A
2SC735M	289A
2SC735O	289A
2SC735OR	289A
2SC735RED	289A
2SC735X	289A
2SC735Y/4454C	289A
2SC735YEL	289A
2SC736	130
2SC736A	181
2SC736B	181
2SC736C	181
2SC736D	181
2SC736E	181
2SC736F	181
2SC736G	181
2SC736GN	181
2SC736H	181
2SC736J	181
2SC736K	181
2SC736L	181
2SC736M	181
2SC736OR	181
2SC736R	181
2SC736X	181
2SC736Y	181
2SC737	123AP
2SC737Y	123AP
2SC738	108
2SC738A	108
2SC738B	108
2SC738C	108
2SC738D	108
2SC738E	108
2SC738F	108
2SC738G	108
2SC738GN	108
2SC738H	108
2SC738J	108
2SC738K	108
2SC738L	108
2SC738M	108
2SC738OR	108
2SC738R	108
2SC738X	108
2SC738Y	108
2SC739	107
2SC739A	108
2SC739B	108
2SC739C	107
2SC739D	108
2SC739E	108
2SC739F	108
2SC739G	108
2SC739GN	108
2SC739H	108
2SC739K	108
2SC739L	108
2SC739M	108
2SC739OR	108
2SC739R	108
2SC739Y	108
2SC740	108
2SC740A	108
2SC740B	108
2SC740C	108
2SC740D	108
2SC740E	108
2SC740F	108
2SC740G	108
2SC740GN	108
2SC740H	108
2SC740J	108
2SC740K	108
2SC740L	108
2SC740M	108
2SC740OR	108
2SC740R	108
2SC740X	108
2SC740Y	108
2SC741	123AP
2SC741B	192
2SC741C	192
2SC741D	192
2SC741E	192
2SC741F	192
2SC741GN	192
2SC741H	192
2SC741J	192
2SC741K	192
2SC741L	192
2SC741M	192
2SC741OR	192
2SC741R	192
2SC741X	192
2SC741Y	192
2SC742	235
2SC743	235
2SC743A	154
2SC744	128
2SC744A	128
2SC745	235
2SC746A	154
2SC746B	198
2SC746C	198
2SC746D	198
2SC746E	198
2SC746F	198
2SC746GN	198
2SC746H	198
2SC746J	198
2SC746K	198
2SC746L	198
2SC746M	198
2SC746OR	198
2SC746R	198
2SC746X	198
2SC746Y	198
2SC748	108
2SC748A	108
2SC748C	108
2SC748D	108
2SC748E	108
2SC748F	108
2SC748G	108
2SC748GN	108
2SC748H	108
2SC748J	108
2SC748K	108
2SC748L	108
2SC748M	108
2SC748OR	108
2SC748R	108
2SC748X	108
2SC748Y	108
2SC749	235
2SC751	199
2SC752	85
2SC752(G)TM-Y	188
2SC752-ORG-G	85
2SC752-RED-G	85
2SC752-YEL-G	85
2SC752A	85
2SC752B	85
2SC752C	85
2SC752D	85
2SC752E	85
2SC752F	85
2SC752G	85
2SC752G-O	85
2SC752G-R	85
2SC752G-TM	85
2SC752G-Y	85
2SC752GA	85
2SC752GN	85
2SC752GTM-Y	188
2SC752GTMY	85
2SC752GY	85
2SC752H	85
2SC752J	85
2SC752K	85
2SC752L	85
2SC752M	85
2SC752OR	123AP
2SC752R	85
2SC752TM-YFA	85
2SC752X	85
2SC752Y	188
2SC753	313
2SC754	123AP
2SC755	123A
2SC757	313
2SC758	162
2SC758OR	229
2SC759	284
2SC760	130
2SC761	161
2SC761(Y)	161
2SC761A	161
2SC761B	161
2SC761C	161
2SC761D	161
2SC761E	161
2SC761F	161
2SC761G	161
2SC761GN	161
2SC761H	161
2SC761J	161
2SC761K	161
2SC761L	161
2SC761M	161
2SC761OR	161
2SC761R	161
2SC761X	161
2SC761Y	161
2SC761Z	161
2SC762	161
2SC762B	161
2SC762C	161
2SC762D	161
2SC762E	161
2SC762F	161
2SC762G	161
2SC762GN	161
2SC762H	161
2SC762J	161
2SC762K	161
2SC762L	161
2SC762M	161
2SC762R	161
2SC762X	161
2SC762Y	161
2SC763	107
2SC763(C)	107
2SC763-C	107
2SC763-OR	107
2SC763A	107
2SC763B	107
2SC763C	107
2SC763CD	107
2SC763D	107
2SC763E	107
2SC763F	107
2SC763G	107
2SC763GN	107
2SC763H	107
2SC763J	107
2SC763K	107
2SC763L	107
2SC763M	107
2SC763OR	107
2SC763R	107
2SC763S	107
2SC763T	107
2SC763X	107
2SC763Y	107
2SC764	100
2SC765	130
2SC765A	181
2SC765B	181
2SC765C	181
2SC765D	181
2SC765E	181
2SC765F	181
2SC765G	181
2SC765GN	181
2SC765H	181
2SC765J	181
2SC765K	181
2SC765L	181
2SC765M	181
2SC765OR	181
2SC765R	181
2SC765X	181
2SC765Y	181
2SC766	130
2SC767	130
2SC768	130
2SC768A	181
2SC768B	181
2SC768C	181
2SC768D	181
2SC768E	181
2SC768F	181
2SC768G	181
2SC768GN	181
2SC768H	181
2SC768J	181
2SC768K	181
2SC768L	181
2SC768M	181
2SC768OR	181
2SC768R	181
2SC768X	181
2SC768Y	181
2SC769	328
2SC770	162
2SC771	229
2SC771A	229
2SC771B	229
2SC771BX	229
2SC771C	229
2SC771D	229
2SC771E	229
2SC771F	229
2SC771G	229
2SC771GN	229
2SC771H	229
2SC771J	229
2SC771K	229
2SC771L	229
2SC771M	229
2SC771OR	229
2SC771R	229
2SC771X	229
2SC771Y	229
2SC772	229
2SC772(IR)	229
2SC772-OR	229
2SC772A	229
2SC772B	229
2SC772BG	229
2SC772BH	229
2SC772BV	229
2SC772BX	229
2SC772BY	229
2SC772C	229
2SC772C1	229
2SC772C2	229
2SC772CA	229
2SC772CK	229
2SC772CL	229
2SC772CS	229
2SC772CU	229
2SC772CV	229
2SC772CX	229
2SC772D	229
2SC772DJ	229
2SC772DU	229
2SC772DV	229
2SC772DX	229
2SC772DY	229
2SC772E	229
2SC772F	229
2SC772G	229
2SC772GN	229
2SC772H	229
2SC772J	229
2SC772K	229
2SC772KB	229
2SC772KC	229
2SC772KD	229
2SC772KD1	229
2SC772KD2	229
2SC772L	229
2SC772M	229
2SC772OR	229
2SC772R	229
2SC772RB-D	229
2SC772RD	229
2SC772RS-D	229
2SC772X	229
2SC772Y	229
2SC773	289A
2SC773(BCE)	289A
2SC773(E)	289A
2SC773A	289A
2SC773B	289A
2SC773C	289A
2SC773C(BCE)	289A
2SC773D	289A
2SC773D(BCE)	289A
2SC773E	289A
2SC773E(BCE)	289A
2SC773F	289A
2SC773G	289A
2SC773GN	289A
2SC773H	289A
2SC773J	289A
2SC773K	289A
2SC773L	289A
2SC773M	289A
2SC773OR	289A
2SC773R	289A
2SC773X	289A
2SC773Y	289A
2SC774	195A
2SC774B	195A
2SC774C	195A
2SC774D	195A
2SC774E	195A
2SC774F	195A
2SC774G	195A
2SC774GN	195A
2SC774H	195A
2SC774J	195A
2SC774K	195A
2SC774L	195A
2SC774M	195A
2SC774OR	195A
2SC774R	195A
2SC774X	195A
2SC774Y	195A
2SC775	195A
2SC775A	195A
2SC775B	195A
2SC775C	195A
2SC775D	195A
2SC775E	195A
2SC775F	195A
2SC775G	195A
2SC775GN	195A
2SC775H	195A
2SC775J	195A
2SC775K	195A
2SC775L	195A
2SC775M	195A
2SC775OR	195A
2SC775R	195A
2SC775X	195A
2SC775Y	195A
2SC776	195A
2SC776(Y)	195A
2SC776A	195A
2SC776B	195A
2SC776C	195A
2SC776D	195A
2SC776E	195A
2SC776F	195A
2SC776G	195A
2SC776GN	195A
2SC776H	195A
2SC776J	195A
2SC776K	195A
2SC776L	195A
2SC776M	195A
2SC776OR	195A
2SC776R	195A
2SC776X	195A
2SC776Y	195A
2SC777	237
2SC777-OR	237
2SC777A	237
2SC777AP	237
2SC777B	237
2SC777C	237
2SC777D	237
2SC777E	237
2SC777F	237
2SC777G	237
2SC777GN	237
2SC777H	237
2SC777J	237
2SC777K	237
2SC777L	237
2SC777M	237
2SC777OR	237
2SC777R	237
2SC777X	237
2SC777Y	237
2SC778	237
2SC778A	237
2SC778B	237
2SC778C	237
2SC778D	237
2SC778E	237
2SC778F	237
2SC778G	237
2SC778GN	237
2SC778H	237
2SC778J	237
2SC778K	237
2SC778L	237
2SC778M	237
2SC778OR	237
2SC778R	237
2SC778X	237
2SC778Y	237
2SC780	287
2SC780-O	287
2SC780-ORG-G	194
2SC780-R	287
2SC780-RED-G	194
2SC780-Y	287
2SC780-YEL-G	194
2SC780A	194
2SC780A/G	194
2SC780AG	287
2SC780AG-0	287
2SC780AG-0	287
2SC780AG-R	287
2SC780AG-Y	287
2SC780B	194
2SC780C	194
2SC780D	194
2SC780E	194
2SC780F	194
2SC780G	287
2SC780G-O	194
2SC780G-R	194
2SC780G-Y	194
2SC780GA	194
2SC780GN	194
2SC780H	194
2SC780J	194
2SC780K	194
2SC780L	194
2SC780M	194
2SC780O	287
2SC780OR	194
2SC780R	194
2SC780X	194
2SC780Y	194
2SC781	195A
2SC781A	195A
2SC781AK	195A
2SC781B	195A
2SC781C	195A
2SC781D	195A
2SC781E	195A
2SC781F	195A
2SC781G	195A
2SC781H	195A
2SC781J	195A
2SC781K	195A
2SC781M	195A
2SC781OR	195A
2SC781R	195A
2SC781X	195A
2SC781Y	195A
2SC784	107
2SC784(BN)	229
2SC784-0	229
2SC784-6	229
2SC784-B	229
2SC784-BN	229
2SC784-BRN	229
2SC784-O	229
2SC784-OR	229
2SC784-ORG	229
2SC784-R	229
2SC784-RED	229
2SC784-Y	229
2SC784A	229
2SC784B	229
2SC784BN	229
2SC784BN-1	229
2SC784BRN	229
2SC784C	229
2SC784D	229
2SC784E	229
2SC784F	229
2SC784G	229
2SC784GN	229
2SC784H	229
2SC784J	229
2SC784K	229
2SC784L	229
2SC784M	229
2SC784O	229
2SC784OR	229
2SC784Q	229
2SC784R	229
2SC784R/4454C	229
2SC784RA	229
2SC784RED	229
2SC784X	229
2SC784Y	229
2SC785	107
2SC785(E)(D)	199
2SC785(O)	199
2SC785-0	229
2SC785-0(ECB)	229
2SC785-B	199
2SC785-BN	199
2SC785-BRN	199
2SC785-O	229
2SC785-ORG	199
2SC785-R	199
2SC785-RED	199
2SC785-Y	199
2SC785-YEL	199
2SC785A	199
2SC785B	199
2SC785BL	199
2SC785BN	199
2SC785BR	199
2SC785BRN	199
2SC785C	199
2SC785D	199
2SC785E	199
2SC785F	199
2SC785G	199
2SC785GN	199
2SC785GR	199
2SC785H	199
2SC785K	199
2SC785L	199
2SC785M	199
2SC785O	199
2SC785R	229
2SC785RA	199
2SC785RED	199
2SC785V	199
2SC785X	199
2SC785Y	199
2SC785YEL	199
2SC786	161
2SC786A	161
2SC786B	161
2SC786C	161
2SC786D	161
2SC786E	161
2SC786F	161
2SC786G	161
2SC786GN	161
2SC786H	161
2SC786J	161
2SC786K	161
2SC786L	161
2SC786M	161
2SC786OR	161
2SC786R	161
2SC786X	161
2SC786Y	161
2SC787	161
2SC787A	161
2SC787B	161
2SC787C	161
2SC787D	161
2SC787E	161
2SC787F	161
2SC787G	161
2SC787GN	161
2SC787H	161
2SC787K	161
2SC787L	161
2SC787M	161
2SC787OR	161
2SC787R	161
2SC787X	161
2SC787Y	161
2SC788	154
2SC788B	154
2SC788C	154
2SC788D	154
2SC788E	154
2SC788F	154
2SC788G	154
2SC788GN	154
2SC788J	154
2SC788K	154
2SC788L	154
2SC788M	154
2SC788OR	154
2SC788R	154
2SC788X	154
2SC788Y	154
2SC789	152
2SC789-0	152
2SC789-0	152
2SC789-R	152
2SC789-Y	152
2SC789A	152
2SC789B	152
2SC789C	315
2SC789D	152
2SC789E	152
2SC789F	152
2SC789G	152
2SC789GN	152
2SC789H	152
2SC789J	152
2SC789K	152
2SC789L	152
2SC789M	152
2SC789OR	152
2SC789R	152
2SC789X	152
2SC789Y	152
2SC790	152
2SC790(O)	152
2SC790-O	152
2SC790Y	152
2SC791	175
2SC791-OR	175
2SC791A	175
2SC791B	175
2SC791C	175
2SC791D	175
2SC791E	175
2SC791F	175
2SC791FA1	175
2SC791G	175
2SC791GN	175
2SC791H	175
2SC791J	175
2SC791K	175
2SC791M	175
2SC791OR	175
2SC791R	175
2SC791X	175
2SC791Y	175
2SC792	162
2SC792FA-3	162
2SC793	130
2SC793-BLU	130
2SC793-R	130
2SC793-RED	130
2SC793-YEL	130
2SC793A	130
2SC793B	130
2SC793BL	130
2SC793C	130
2SC793E	130
2SC793F	130
2SC793G	130
2SC793GN	130
2SC793H	130
2SC793J	130
2SC793K	130
2SC793L	130
2SC793M	130
2SC793OR	130
2SC793R	130
2SC793X	130
2SC793Y	130
2SC794	130
2SC794A	130
2SC794B	130
2SC794C	130
2SC794D	130
2SC794E	130
2SC794F	130
2SC794G	130
2SC794GN	130
2SC794H	130
2SC794J	130
2SC794K	130
2SC794L	130
2SC794OR	130
2SC794R	130
2SC794RA	130
2SC794X	130
2SC794Y	130
2SC795	124
2SC795(BN)	124
2SC795A	124
2SC795B	124
2SC795BN	124

PART NUMBER	NTE REPLACEMENT
2SC795C	124
2SC795D	124
2SC795F	124
2SC795G	124
2SC795GN	124
2SC795H	124
2SC795J	124
2SC795L	124
2SC795M	124
2SC7950R	124
2SC795R	124
2SC795X	124
2SC795Y	124
2SC796	123AP
2SC796A	192
2SC796B	192
2SC796C	192
2SC796D	192
2SC796E	192
2SC796F	192
2SC796G	192
2SC796GN	192
2SC796H	192
2SC796J	192
2SC796K	192
2SC796L	192
2SC796M	192
2SC7960R	192
2SC796R	192
2SC796X	192
2SC796Y	192
2SC797	128
2SC797A	123AP
2SC797B	123AP
2SC797C	123AP
2SC797D	123AP
2SC797E	123AP
2SC797F	123AP
2SC797G	123AP
2SC797GN	123AP
2SC797H	123AP
2SC797J	123AP
2SC797K	123AP
2SC797L	123AP
2SC797M	123AP
2SC7970R	123AP
2SC797R	123AP
2SC797X	123AP
2SC797Y	123AP
2SC798	128
2SC798A	128
2SC798B	128
2SC798C	128
2SC798D	128
2SC798E	128
2SC798G	128
2SC798GN	128
2SC798H	128
2SC798J	128
2SC798K	128
2SC798L	128
2SC798M	128
2SC7980R	128
2SC798R	128
2SC798X	128
2SC798Y	128
2SC799	237
2SC799-4	237
2SC799A	237
2SC799AP	237
2SC799B	237
2SC799C	237
2SC799D	237
2SC799E	237
2SC799F	237
2SC799G	237
2SC799GN	237
2SC799H	237
2SC799J	237
2SC799K	237
2SC799L	237
2SC799M	237
2SC7990R	237
2SC799R	237
2SC799X	237
2SC799Y	237
2SC800	107
2SC800A	224
2SC800B	224
2SC800C	224
2SC800D	224
2SC800E	224
2SC800F	224
2SC800G	224
2SC800GN	224
2SC800H	224
2SC800J	224
2SC800K	224
2SC800L	224
2SC800M	224
2SC8000R	224
2SC800R	224
2SC800X	224
2SC800Y	224
2SC801	128
2SC802	192
2SC803	128
2SC803A	224
2SC803B	224
2SC803C	224
2SC803D	224
2SC803E	224
2SC803F	224
2SC803G	224
2SC803H	224
2SC803J	224
2SC803K	224
2SC803L	224
2SC803M	224
2SC8030R	224
2SC803R	224
2SC803X	224
2SC803Y	224
2SC804	108
2SC804H	196
2SC805	154
2SC805A	154
2SC805B	154
2SC805C	154
2SC805D	154
2SC805E	154
2SC805F	154
2SC805G	154
2SC805GN	154
2SC805H	154
2SC805J	154
2SC805L	154
2SC8050R	154
2SC805R	154
2SC805X	154
2SC805Y	154
2SC806	283
2SC806(A)	163A
2SC806A	283
2SC806B	163A
2SC806C	163A
2SC806D	163A
2SC806E	163A
2SC806F	163A
2SC806G	163A
2SC806J	163A
2SC806L	163A
2SC806M	163A
2SC8060R	163A
2SC806R	163A
2SC806X	163A
2SC806Y	163A
2SC807	385
2SC807(A)	283
2SC807A	385
2SC807AK	283
2SC808	162
2SC809	316
2SC810	248
2SC811	161
2SC812	123A
2SC812A	224
2SC812B	224
2SC812C	224
2SC812D	224
2SC812E	224
2SC812F	224
2SC812G	224
2SC812GN	224
2SC812H	224
2SC812J	224
2SC812K	224
2SC812L	224
2SC812M	224
2SC8120R	224
2SC812R	224
2SC812Y	224
2SC814	192
2SC814A	123AP
2SC814B	123AP
2SC814C	123AP
2SC814D	123AP
2SC814E	123AP
2SC814F	123AP
2SC814G	123AP
2SC814GN	123AP
2SC814H	123AP
2SC814J	123AP
2SC814K	123AP
2SC814M	123AP
2SC8140R	123AP
2SC814R	123AP
2SC814X	123AP
2SC814Y	123AP
2SC815	289A
2SC815(M)	289A
2SC815-1	289A
2SC815-O	289A
2SC815A	289A
2SC815B	289A
2SC815BK	289A
2SC815C	289A
2SC815D	289A
2SC815E	289A
2SC815F	289A
2SC815G	289A
2SC815GN	289A
2SC815H	289A
2SC815J	289A
2SC815K	289A
2SC815K,L	289A
2SC815KM	123AP
2SC815L	289A
2SC815LJ	289A
2SC815M	289A
2SC815OR	289A
2SC815P	289A
2SC815R	289A
2SC815S	289A
2SC815SA	289A
2SC815SC	289A
2SC815X	289A
2SC815Y	289A
2SC816	128
2SC816A	128
2SC816B	128
2SC816C	128
2SC816D	128
2SC816E	128
2SC816F	128
2SC816G	128
2SC816GN	128
2SC816H	128
2SC816HL	295
2SC816K	128
2SC816L	128
2SC816M	128
2SC816OR	128
2SC816R	128
2SC816X	128
2SC816Y	128
2SC817	316
2SC818	154
2SC818A	198
2SC818B	198
2SC818C	198
2SC818D	198
2SC818E	198
2SC818F	198
2SC818G	198
2SC818GN	198
2SC818H	198
2SC818J	198
2SC818K	198
2SC818L	198
2SC818M	198
2SC818OR	198
2SC818R	198
2SC818X	198
2SC818Y	198
2SC819	329
2SC821	278
2SC822	278
2SC823	278
2SC824	278
2SC826	128
2SC826A	128
2SC826B	128
2SC826C	128
2SC826D	128
2SC826E	128
2SC826F	128
2SC826G	128
2SC826H	128
2SC826J	128
2SC826K	128
2SC826L	128
2SC826M	128
2SC826OR	128
2SC826R	128
2SC826X	128
2SC826Y	128
2SC827	128
2SC827A	128
2SC827B	128
2SC827C	128
2SC827D	128
2SC827E	128
2SC827F	128
2SC827G	128
2SC827GN	128
2SC827H	128
2SC827J	128
2SC827K	128
2SC827M	128
2SC827OR	128
2SC827R	128
2SC827X	128
2SC827Y	128
2SC828	85
2SC828(H)	85
2SC828(N)	85
2SC828(O)	85
2SC828(P)	85
2SC828(P)(Q)	199
2SC828(Q)	85
2SC828(R)	85
2SC828(R)(S)	199
2SC828(R,Q,P)	85
2SC828(R,S,T)	85
2SC828(S)	85
2SC828(T)	85
2SC828-3	85
2SC828-O	85
2SC828-OR	85
2SC828-P	85
2SC828-Q	85
2SC828-R	85
2SC828A	85
2SC828A(IR)	229
2SC828A(P)	85
2SC828A(Q)	85
2SC828A(R)	85
2SC828A(S)	85
2SC828AGC3	85
2SC828AGC-3	85
2SC828AO	85
2SC828AP	85
2SC828AQ	85
2SC828AR	85
2SC828AS	85
2SC828AT	85
2SC828D	85
2SC828G	85
2SC828GN	85
2SC828L	85
2SC828M	85
2SC828OR	85
2SC828P	85
2SC828Q	199
2SC828Q-6	85
2SC828QRS	85
2SC828R	85
2SC828R-1	85
2SC828RA	85
2SC828RH	85
2SC828RT	85
2SC828S	85
2SC828T	85
2SC828X	85
2SC828YL	85
2SC829	85
2SC829(Y)	85
2SC829-OR	85
2SC829/4454C	85
2SC829A	85
2SC829AK	85
2SC829B	85
2SC829B(IR)	123AP
2SC829BJ	85
2SC829BK	85
2SC829C	85
2SC829CL	85
2SC829D	85
2SC829E	85
2SC829G	85
2SC829GN	85
2SC829H	85
2SC829K	85
2SC829L	85
2SC829M	85
2SC829OR	85
2SC830	175
2SC830A	175
2SC830B	175
2SC830C	175
2SC830D	175
2SC830E	175
2SC830F	175
2SC830G	175
2SC830GN	175
2SC830H	175
2SC830J	175
2SC830K	175
2SC830L	175
2SC830M	175
2SC8300R	175
2SC830R	175
2SC830X	175
2SC830Y	175
2SC833	123AP
2SC833BL	123AP
2SC834L	123AP
2SC835	107
2SC836	123A
2SC836M	123AP
2SC837	107
2SC837(K)	229
2SC837(KL)	229
2SC837(L)	229
2SC837A	229
2SC837B	229
2SC837C	229
2SC837D	229
2SC837E	229
2SC837F	107
2SC837G	229
2SC837GN	229
2SC837H	107
2SC837J	229
2SC837K	107
2SC837KL	229
2SC837L	107
2SC837M	229
2SC837OR	229
2SC837R	229
2SC837WF	107
2SC837X	229
2SC837Y	229
2SC838	289A
2SC838(A)	289A
2SC838(E)	289A
2SC838(F)	289A
2SC838(H)	289A
2SC838(IR)	123AP
2SC838(J)	289A
2SC838(K)	289A
2SC838(L)	289A
2SC838(M)	289A
2SC838(O)	289A
2SC838-2	289A
2SC838-O	289A
2SC838A	289A
2SC838B	289A
2SC838BL	289A
2SC838C	289A
2SC838D	289A
2SC838E	289A
2SC838F	289A
2SC838H	289A
2SC838HF	289A
2SC838I	289A
2SC838J	289A
2SC838K	289A
2SC838L	289A
2SC838M	289A
2SC838S	289A
2SC838W	289A
2SC839	85
2SC839(F)	85
2SC839(J)	85
2SC839(JI)	85
2SC839-E	85
2SC839-F	85
2SC839E	85
2SC839F	85
2SC839G	85
2SC839GN	85
2SC839H	85
2SC839J	85
2SC839JH	85
2SC839JI	85
2SC839OR	85
2SC839X	85
2SC840	175
2SC840(P)	175
2SC840A	175
2SC840AC	175
2SC840B	175
2SC840C	175
2SC840D	175
2SC840E	175
2SC840F	175
2SC840G	175
2SC840GN	175
2SC840H	175
2SC840HP	175
2SC840J	175
2SC840K	175
2SC840L	175
2SC840M	175
2SC8400R	175
2SC840P	175
2SC840PQ	175
2SC840Q	175
2SC840R	175
2SC840X	175
2SC840Y	175
2SC841	278
2SC844	129
2SC845	311
2SC847	123AP
2SC847A	192
2SC847B	192
2SC847C	192
2SC847D	192
2SC847E	192
2SC847F	192
2SC847G	192
2SC847GN	192
2SC847H	192
2SC847J	192
2SC847K	192
2SC847L	192
2SC847M	192
2SC847OR	192
2SC847R	192
2SC847X	192
2SC848	123AP
2SC848A	192
2SC848B	192
2SC848C	192
2SC848D	192
2SC848E	192
2SC848F	192
2SC848G	192
2SC848GN	192
2SC848H	192
2SC848J	192
2SC848K	192
2SC848L	192
2SC848M	192
2SC848OR	192
2SC848R	192
2SC848X	192
2SC848Y	192
2SC849	123AP
2SC849A	192
2SC849B	192
2SC849C	192
2SC849D	192
2SC849E	192
2SC849F	192
2SC849G	192
2SC849GN	192
2SC849H	192
2SC849J	192
2SC849K	192
2SC849L	192
2SC849M	192
2SC849OR	192
2SC849R	192
2SC849X	192
2SC849Y	192
2SC850	123AP
2SC850A	192
2SC850B	192
2SC850C	192
2SC850D	192
2SC850E	192
2SC850F	192
2SC850G	192
2SC850GN	192
2SC850H	192
2SC850J	192
2SC850K	192
2SC850L	192
2SC850M	192
2SC8500R	192
2SC850R	192
2SC850X	192
2SC850Y	192
2SC851	130
2SC851A	181
2SC851B	181
2SC851C	181
2SC851D	181
2SC851E	181
2SC851F	181
2SC851G	181
2SC851GN	181
2SC851H	181
2SC851K	181
2SC851L	181
2SC851M	181
2SC851OR	181
2SC851R	181
2SC851X	181
2SC851Y	181
2SC852	161
2SC852A	161
2SC853	192A
2SC853-OR	192A
2SC853A	192A
2SC853B	192A
2SC853C	192A
2SC853D	192A
2SC853E	192A
2SC853F	192A
2SC853G	192A
2SC853GN	192A
2SC853H	192A
2SC853J	192A
2SC853K	192A
2SC853KLM	192A
2SC853L	192A
2SC853M	192A
2SC853OR	192A
2SC853R	192A
2SC853X	192A
2SC853Y	192A
2SC854	278
2SC854Q	290A
2SC855	278
2SC856	154
2SC856-02	154
2SC856-OR	154
2SC856A	154
2SC856B	154
2SC856C	154
2SC856D	154
2SC856E	154
2SC856F	154
2SC856G	154
2SC856GN	154
2SC856J	154
2SC856K	154
2SC856L	377
2SC856M	154
2SC856OR	154
2SC856R	154
2SC856X	154
2SC856Y	154
2SC857	154
2SC857H	154
2SC857K	154
2SC858	123AP
2SC858A	123AP
2SC858B	123AP
2SC858C	123AP
2SC858D	123AP
2SC858E	123AP
2SC858F	123AP
2SC858FG	123AP
2SC858G	123AP
2SC858GA	123AP
2SC858GN	123AP
2SC858H	123
2SC858J	123AP
2SC858K	123AP
2SC858L	123AP
2SC858M	123AP
2SC858OR	123AP
2SC858R	123AP
2SC858X	123AP
2SC858Y	123AP
2SC859	199
2SC859A	199
2SC859B	199
2SC859D	199
2SC859E	199
2SC859F	199
2SC859FG	199
2SC859G	199
2SC859GK	199
2SC859GL	199
2SC859GM	199
2SC859GN	199
2SC859H	199
2SC859J	199
2SC859K	199
2SC859L	199
2SC859M	199
2SC8590R	199
2SC859R	123AP
2SC859X	199
2SC859Y	199
2SC860	161
2SC860A	108
2SC860B	108
2SC860C	161
2SC860D	161
2SC860E	161
2SC860F	108
2SC860G	108
2SC860GN	108
2SC860H	108
2SC860J	108
2SC860K	108
2SC860L	108
2SC860M	108
2SC8600R	108
2SC860R	108
2SC860X	108
2SC860Y	108
2SC861	163A
2SC862	283
2SC863	161
2SC863A	319P
2SC863B	319P
2SC863C	319P
2SC863D	319P
2SC863E	319P
2SC863F	319P
2SC863G	319P
2SC863GN	319P
2SC863H	319P
2SC863J	319P
2SC863K	319P
2SC863L	319P
2SC863M	319P
2SC8630R	319P
2SC863R	319P
2SC863X	319P
2SC863Y	319P
2SC864	161
2SC865	195A
2SC866	224
2SC866A	224
2SC866B	224
2SC866C	224
2SC866D	224
2SC866E	224
2SC866F	224
2SC866G	224
2SC866GN	224
2SC866H	224
2SC866J	224
2SC866K	224
2SC866L	224
2SC866M	224
2SC8660R	224
2SC866R	224
2SC866X	224
2SC866Y	224
2SC867	198
2SC867-A	198
2SC867-B	198
2SC867-C	198
2SC867B	198
2SC867C	198
2SC867GN	198
2SC867J	198
2SC867K	198
2SC867L	198
2SC867M	198
2SC8670R	198
2SC868	154
2SC868A	194
2SC868B	194
2SC868C	194
2SC868D	194
2SC868E	194
2SC868F	194
2SC868G	194
2SC868GN	194
2SC868H	194
2SC868J	194
2SC868K	194
2SC868L	194
2SC868M	194
2SC8680R	194
2SC868R	194
2SC868X	194
2SC868Y	194
2SC869	194
2SC869A	194
2SC869B	194
2SC869C	194
2SC869D	194
2SC869E	194
2SC869F	194
2SC869G	194
2SC869GN	194
2SC869J	194
2SC869K	194
2SC869L	194
2SC869M	194
2SC8690R	194
2SC869R	194
2SC869X	194
2SC869Y	194
2SC870	89
2SC870A	85
2SC870B	85
2SC870BL	85
2SC870C	85
2SC870D	85
2SC870E	85
2SC870F	85
2SC870FL	85
2SC870G	85
2SC870GN	85
2SC870H	85
2SC870J	85
2SC870K	85
2SC870L	85
2SC870M	85
2SC8700R	85
2SC870R	85
2SC870X	85
2SC870Y	85
2SC871	85

PART NUMBER	NTE REPLACEMENT
2SC871-G	85
2SC871A	85
2SC871AM	85
2SC871B	85
2SC871BL	85
2SC871C	85
2SC871D	85
2SC871E	85
2SC871F	85
2SC871G	85
2SC871GN	85
2SC871H	85
2SC871J	85
2SC871K	85
2SC871L	85
2SC871M	85
2SC871OR	85
2SC871R	85
2SC871X	85
2SC871Y	85
2SC872	278
2SC873	195A
2SC874	293
2SC875	128
2SC875(D)	128
2SC875(E)	128
2SC875(F)	128
2SC875-1	128
2SC875-1C	128
2SC875-1D	128
2SC875-1E	128
2SC875-1F	128
2SC875-2	128
2SC875-2C	128
2SC875-2D	128
2SC875-2E	128
2SC875-2F	128
2SC875-3	128
2SC875-3C	128
2SC875-3D	128
2SC875-3E	128
2SC875-3F	128
2SC875B	128
2SC875BR	128
2SC875C	128
2SC875D	128
2SC875DL	128
2SC875E	128
2SC875EL	128
2SC875F	128
2SC875G	128
2SC875GN	128
2SC875J	128
2SC875K	128
2SC875L	128
2SC875M	128
2SC875OR	128
2SC875X	128
2SC875Y	128
2SC876	128
2SC876(F)	128
2SC876-E	128
2SC876-F	128
2SC876A	128
2SC876B	128
2SC876C	128
2SC876D	128
2SC876E	128
2SC876F	128
2SC876G	128
2SC876GN	128
2SC876H	128
2SC876J	128
2SC876K	128
2SC876L	128
2SC876M	128
2SC876OR	128
2SC876R	128
2SC876TV	128
2SC876TV(D)	128
2SC876TV(E)	128
2SC876TV-E	128
2SC876TV-F	128
2SC876TVD	128
2SC876TVE	128
2SC876TVEF	128
2SC876TVF	128
2SC876X	128
2SC876Y	128
2SC877	123A
2SC878	123A
2SC879	107
2SC880	297
2SC881	192A
2SC881A	192A
2SC881B	192A
2SC881C	192A
2SC881D	192A
2SC881E	192A
2SC881F	192A
2SC881G	192A
2SC881GN	192A
2SC881H	192A
2SC881K	192A
2SC881L	192A
2SC881M	192A
2SC881OR	192A
2SC881R	192A
2SC881X	192A
2SC881Y	192A
2SC882	328
2SC883	196
2SC884	175
2SC885	162
2SC886	162
2SC887	162
2SC888	162
2SC889	162
2SC891	186
2SC892	152
2SC893	186
2SC894	123AP
2SC894A	123AP
2SC894B	123AP
2SC894C	123AP
2SC894D	123AP
2SC894E	123AP
2SC894F	123AP
2SC894G	123AP
2SC894GN	123AP
2SC894H	123AP
2SC894J	123AP
2SC894K	123AP
2SC894L	123AP
2SC894M	123AP
2SC894OR	123AP
2SC894R	123AP
2SC894X	123AP
2SC894Y	123AP
2SC895	238
2SC896	123AP
2SC896A	194
2SC896B	194
2SC896C	194
2SC896D	194
2SC896E	194
2SC896F	194
2SC896G	194
2SC896GN	194
2SC896J	194
2SC896K	194
2SC896L	194
2SC896M	194
2SC896OR	194
2SC896R	194
2SC896X	194
2SC896Y	194
2SC897	280
2SC897A	280
2SC897B	280
2SC897C	280
2SC898	280
2SC898A	280
2SC898B	280
2SC898C	280
2SC898D	162
2SC898E	162
2SC898F	162
2SC898G	162
2SC898GN	162
2SC898H	162
2SC898J	162
2SC898K	162
2SC898L	162
2SC898M	162
2SC898OR	162
2SC898X	162
2SC898Y	162
2SC899	123AP
2SC899A	123AP
2SC899B	123AP
2SC899C	123AP
2SC899D	123AP
2SC899E	229
2SC899F	123AP
2SC899G	123AP
2SC899GN	123AP
2SC899H	123AP
2SC899J	123AP
2SC899K	123AP
2SC899L	123AP
2SC899M	123AP
2SC899OR	123AP
2SC899R	123AP
2SC899X	123AP
2SC899Y	123AP
2SC900	199
2SC900(E)	199
2SC900(E)(L)	199
2SC900(F)	199
2SC900(L)	199
2SC900(U)	199
2SC900-OR	199
2SC900A	199
2SC900B	89
2SC900C	199
2SC900D	199
2SC900E	199
2SC900F	199
2SC900G	199
2SC900J	199
2SC900K	199
2SC900L	199
2SC900M	199
2SC9000R	199
2SC900R	199
2SC900S	199
2SC900SA	199
2SC900SB	199
2SC900SC	199
2SC900SD	199
2SC900U	199
2SC900VE	199
2SC900X	199
2SC900Y	199
2SC901	163A
2SC901A	163A
2SC901B	163A
2SC901C	163A
2SC901D	163A
2SC901E	163A
2SC901F	163A
2SC901G	163A
2SC901GN	163A
2SC901H	163A
2SC901J	163A
2SC901K	163A
2SC901L	163A
2SC901M	163A
2SC9010R	163A
2SC901R	163A
2SC901X	163A
2SC901Y	163A
2SC902	328
2SC903	287
2SC903E	289A
2SC903F	289A
2SC904	194
2SC905	194
2SC906	123AP
2SC906(F)	123A
2SC906F	123AP
2SC907	199
2SC907A	199
2SC907AC	199
2SC907AD	199
2SC907AH	199
2SC907B	192
2SC907C	199
2SC907D	199
2SC907E	192
2SC907F	192
2SC907G	192
2SC907GN	192
2SC907H	199
2SC907HA	199
2SC907J	192
2SC907K	192
2SC907L	192
2SC907M	192
2SC907OR	192
2SC907R	192
2SC907X	192
2SC907Y	192
2SC908	278
2SC909	186
2SC911	186
2SC912	108
2SC912M	199
2SC913	123AP
2SC913A	194
2SC913B	194
2SC913C	194
2SC913D	194
2SC913E	194
2SC913F	194
2SC913G	194
2SC913GN	194
2SC913H	194
2SC913J	194
2SC913K	194
2SC913L	194
2SC913M	194
2SC913OR	194
2SC913R	194
2SC913X	194
2SC913Y	194
2SC914	194
2SC914A	123A
2SC915	194
2SC915A	123AP
2SC916	152
2SC917	229
2SC917(K)	229
2SC917A	229
2SC917B	229
2SC917C	229
2SC917D	229
2SC917E	229
2SC917F	229
2SC917G	229
2SC917GN	229
2SC917H	229
2SC917J	229
2SC917K	229
2SC917L	229
2SC917M	229
2SC917OR	229
2SC917R	229
2SC917X	229
2SC917Y	229
2SC918	161
2SC918A	229
2SC918AL	229
2SC918B	229
2SC918C	229
2SC918D	229
2SC918E	229
2SC918F	229
2SC918G	161
2SC918GN	229
2SC918H	229
2SC918J	229
2SC918K	229
2SC918L	229
2SC918LF	229
2SC918M	229
2SC918OR	229
2SC918R	229
2SC918X	229
2SC918XL	229
2SC918Y	229
2SC920	229
2SC920-0Q	229
2SC920-0R	229
2SC920A	229
2SC920B	229
2SC920C	229
2SC920CL	229
2SC920D	229
2SC920E	229
2SC920F	229
2SC920G	229
2SC920GN	229
2SC920H	229
2SC920L	229
2SC920M	229
2SC920OR	229
2SC920Q	229
2SC920R	229
2SC920X	229
2SC920Y	229
2SC921	107
2SC921(L)	107
2SC921(VHF)	107
2SC921A	107
2SC921B	107
2SC921C	107
2SC921C1	107
2SC921CL	229
2SC921D	107
2SC921E	107
2SC921F	107
2SC921G	107
2SC921GN	107
2SC921H	107
2SC921J	107
2SC921K	107
2SC921L	107
2SC921M	107
2SC921OR	107
2SC921R	107
2SC921W	107
2SC921X	107
2SC921Y	107
2SC922	123AP
2SC922A	123AP
2SC922B	123AP
2SC922C	123AP
2SC922K	123AP
2SC922L	123AP
2SC922M	123AP
2SC923	199
2SC923(E)(F)	199
2SC923A	199
2SC923B	199
2SC923C	199
2SC923D	199
2SC923E	199
2SC923F	199
2SC923G	199
2SC923GN	199
2SC923H	199
2SC923K	199
2SC923L	199
2SC923M	199
2SC923OR	199
2SC923R	199
2SC923X	199
2SC923Y	199
2SC924	108
2SC924A	108
2SC924B	108
2SC924C	108
2SC924D	108
2SC924E	108
2SC924F	108
2SC924G	108
2SC924GN	108
2SC924H	108
2SC924J	108
2SC924K	108
2SC924L	108
2SC924M	108
2SC924OR	108
2SC924R	108
2SC924X	108
2SC924Y	108
2SC925	123AP
2SC925(M)	293
2SC925A	293
2SC925B	293
2SC925C	293
2SC925D	293
2SC925E	293
2SC925F	293
2SC925G	293
2SC925GN	293
2SC925H	293
2SC925J	293
2SC925K	293
2SC925L	293
2SC925M	293
2SC925OR	293
2SC925R	293
2SC925X	293
2SC925Y	293
2SC926	154
2SC926(A)	154
2SC926-OR	154
2SC926A	154
2SC926B	154
2SC926C	154
2SC926D	154
2SC926E	154
2SC926F	154
2SC926G	154
2SC926GN	154
2SC926H	154
2SC926J	154
2SC926K	154
2SC926L	154
2SC926M	154
2SC9260R	154
2SC926R	154
2SC926X	154
2SC926Y	154
2SC927	199
2SC927(D)	161
2SC927(E)	161
2SC927A	319P
2SC927B	161
2SC927C	319P
2SC927C(E)	161
2SC927C(K)	161
2SC927CJ	161
2SC927CK	161
2SC927CT	161
2SC927CU	161
2SC927CW	161
2SC927D	161
2SC927E	161
2SC927E,Z	161
2SC927F	161
2SC927G	161
2SC927GN	161
2SC927H	161
2SC927J	161
2SC927K	161
2SC927L	161
2SC927M	161
2SC9270R	161
2SC927R	161
2SC927X	161
2SC927XL	161
2SC927Y	161
2SC927Z	161
2SC928	161
2SC928A	319P
2SC928B	161
2SC928C	161
2SC928D	161
2SC928E	161
2SC928F	319P
2SC928G	319P
2SC928GN	319P
2SC928H	319P
2SC928J	319P
2SC928K	319P
2SC928L	319P
2SC928M	319P
2SC928OR	319P
2SC928R	319P
2SC928X	319P
2SC928Y	319P
2SC929	229
2SC929(0)	229
2SC929(E)	229
2SC929-0	229
2SC929-0	229
2SC929A	229
2SC929B	229
2SC929C	229
2SC929C1	229
2SC929D	107
2SC929D1	229
2SC929DE	229
2SC929DP	229
2SC929DU	229
2SC929DV	229
2SC929E	229
2SC929ED	229
2SC929EZ	229
2SC929F	229
2SC929FK	229
2SC929G	229
2SC929GN	229
2SC929H	229
2SC929J	229
2SC929K	229
2SC929L	229
2SC929M	229
2SC929NP	229
2SC929OR	229
2SC929R	229
2SC929X	229
2SC929Y	229
2SC930	107
2SC930(D)	107
2SC930(E)	107
2SC930-0R	107
2SC930A	107
2SC930B	107
2SC930BB	107
2SC930BK	107
2SC930BV	107
2SC930C	107
2SC930C-IF	107
2SC930CK	107
2SC930CL	107
2SC930CS	107
2SC930D	107
2SC930DB	107
2SC930DC	107
2SC930DE	107
2SC930DH	107
2SC930DK	107
2SC930DS	107
2SC930DT	107
2SC930DT-2	107
2SC930DX	107
2SC930DZ	107
2SC930E	107
2SC930E1	107
2SC930EP	107
2SC930ET	107
2SC930EV	107
2SC930EX	107
2SC930F	107
2SC930G	107
2SC930GN	107
2SC930H	107
2SC930J	107
2SC930K	107
2SC930L	107
2SC930M	107
2SC930NP	107
2SC9300R	107
2SC930R	107
2SC930X	107
2SC930Y	107
2SC931	186A
2SC931C	186A
2SC931D	186A
2SC931E	186A
2SC932	152
2SC932(E)	186
2SC932A	186
2SC932B	186
2SC932BK	186
2SC932C	186
2SC932D	186
2SC932E	152
2SC932F	186
2SC932G	186
2SC932GN	186
2SC932H	186
2SC932J	186
2SC932K	186
2SC932L	186
2SC932M	186
2SC9320R	186
2SC932R	186
2SC932X	186
2SC932Y	186
2SC933	289A
2SC933(D)	289A
2SC933(F)	289A
2SC933(G)	289A
2SC933A	289A
2SC933B	289A
2SC933BB	289A
2SC933C	289A
2SC933D	289A
2SC933D(F)	289A
2SC933E	289A
2SC933E(F)	289A
2SC933F	289A
2SC933FB	289A
2SC933FP	289A
2SC933FPC	289A
2SC933FPD	289A
2SC933FPE	289A
2SC933FPF	289A
2SC933FPG	289A
2SC933G	289A
2SC933GN	289A
2SC933H	289A
2SC933J	289A
2SC933K	289A
2SC933L	289A
2SC933M	289A
2SC9330R	289A
2SC933R	289A
2SC933X	289A
2SC933Y	289A
2SC934	123AP
2SC934-0	123AP
2SC934A	123AP
2SC934B	123AP
2SC934C	123AP
2SC934D	123AP
2SC934E	123AP
2SC934F	123AP
2SC934G	123AP
2SC934GN	123AP
2SC934H	123AP
2SC934J	123AP
2SC934K	123AP
2SC934L	123AP
2SC934M	123AP
2SC9340R	123AP
2SC934P	123AP
2SC934Q	123AP
2SC934R	123AP
2SC934X	123AP
2SC934Y	123AP
2SC935	162
2SC935-0R	162
2SC935A	162
2SC935B	162
2SC935C	162
2SC935D	162
2SC935E	162
2SC935F	162
2SC935G	162
2SC935GN	162
2SC935H	162
2SC935J	162
2SC935K	162
2SC935M	162
2SC9350R	162
2SC935R	162
2SC935X	162
2SC935Y	162
2SC936	164
2SC936(BK)	164
2SC936A	164
2SC936B	164
2SC936BK	164
2SC936C	164
2SC936D	164
2SC936E	164
2SC936F	164
2SC936G	164
2SC936GN	164
2SC936H	164
2SC936J	164
2SC936K	164
2SC936L	164
2SC936M	164
2SC9360R	164
2SC936R	164
2SC936X	164
2SC936Y	164
2SC937	165
2SC937(BK)	165
2SC937(YL)	165
2SC937(YL,BK)	165
2SC937-01	165
2SC937A	165
2SC937B	165
2SC937BK	165
2SC937C	165
2SC937D	165
2SC937E	165
2SC937F	165
2SC937G	165
2SC937GN	165
2SC937H	165
2SC937J	165
2SC937K	165
2SC937L	165
2SC937M	165
2SC937OR	165
2SC937R	165
2SC937X	165
2SC937Y	165
2SC937YL	238
2SC938	289A
2SC938-0	289A
2SC938A	289A
2SC938B	289A
2SC938C	289A
2SC938D	289A
2SC938E	289A
2SC938F	289A
2SC938G	289A
2SC938GN	289A
2SC938H	289A
2SC938J	289A
2SC938K	289A
2SC938L	289A
2SC938M	289A
2SC938OR	289A
2SC938R	289A
2SC938X	289A
2SC938Y	289A
2SC939	163A
2SC939(L)	123A
2SC939D	283
2SC939I	283
2SC939L	163A
2SC940	283
2SC940(L)(M)	283
2SC940-Z	398
2SC940L	283
2SC940M	283
2SC940Q	283
2SC941	289A
2SC941(0),(R)	289A
2SC941-0	289A
2SC941-0Y	289A
2SC941-0	289A
2SC941-0Y	289A
2SC941-R	289A
2SC941-Y	289A
2SC941K	289A
2SC941O	289A
2SC941R	289A
2SC941R-TM	289A
2SC941TM	289A
2SC941TM-0	289A
2SC941Y	289A
2SC942	123A
2SC943	123AP
2SC943A	123AP
2SC943B	123AP
2SC943C	123AP
2SC943D	123AP
2SC943E	123AP
2SC943F	123AP
2SC943G	123AP
2SC943GN	123AP
2SC943H	123AP
2SC943J	123AP
2SC943K	123AP
2SC943L	123AP
2SC943M	123AP
2SC943OR	123AP
2SC943R	123AP
2SC943X	123AP
2SC943Y	123AP
2SC944	85
2SC944K	123AP
2SC944P	85
2SC944Q	85
2SC944S	85

PART NUMBER	NTE REPLACEMENT
2SC945	85
2SC945(IR)	199
2SC945(K)	85
2SC945(L)	85
2SC945(L)Q	85
2SC945(P)	85
2SC945(Q)	85
2SC945(R)	85
2SC945(TK)	85
2SC945(TK,P)	85
2SC945(TP)	85
2SC945(TQ)	85
2SC945(TQ,Q)	85
2SC945-0	85
2SC945-K	85
2SC945-OR	85
2SC945-P	85
2SC945-Q	85
2SC945-R	85
2SC945-T	85
2SC945-TQ	85
2SC945A	85
2SC945A9C)T	85
2SC945A(C)	85
2SC945A(C)-T	85
2SC945A(C)T	85
2SC945A(K)	85
2SC945A(P)	85
2SC945A(Q)	85
2SC945A(R)	85
2SC945A-AQ	85
2SC945A-PA	85
2SC945A-Q	85
2SC945A-QA	85
2SC945A-RA	85
2SC945A-T	85
2SC945AC	85
2SC945AC-T	85
2SC945ACT	85
2SC945AG	85
2SC945AK	85
2SC945AKT	85
2SC945AP	85
2SC945APQ	85
2SC945APT	85
2SC945AQ	85
2SC945AQ.R	85
2SC945AR	85
2SC945AT	85
2SC945C	85
2SC945GN	85
2SC945H	85
2SC945J	85
2SC945K	85
2SC945KP	85
2SC945L	85
2SC945OR	85
2SC945P	85
2SC945P,Q	289
2SC945PA	85
2SC945PJ	85
2SC945PQ	85
2SC945PR	85
2SC945Q	85
2SC945Q,R	85
2SC945QZ	85
2SC945R	85
2SC945RA	85
2SC945T	85
2SC945TP	85
2SC945ZA	85
2SC947	161
2SC947A	161
2SC947B	161
2SC947C	161
2SC947D	161
2SC947E	161
2SC947F	161
2SC947G	161
2SC947GN	161
2SC947H	108
2SC947J	161
2SC947K	161
2SC947L	161
2SC947M	161
2SC947OR	161
2SC947R	161
2SC947X	161
2SC947Y	161
2SC948	161
2SC948A	161
2SC948B	161
2SC948D	161
2SC948E	161
2SC948F	161
2SC948G	161
2SC948GN	161
2SC948H	161
2SC948J	161
2SC948K	161
2SC948L	161
2SC948M	161
2SC948OR	161
2SC948R	161
2SC948X	161
2SC948Y	161
2SC949	123A
2SC950	123A
2SC951	123AP
2SC952	123AP
2SC953	123A
2SC954	123A
2SC955	123A
2SC956	123A
2SC957	161
2SC957A	108
2SC957AL	108
2SC957B	108
2SC957C	108
2SC957D	108
2SC957E	108
2SC957F	108
2SC957G	108
2SC957GN	108
2SC957H	108
2SC957J	108
2SC957K	108
2SC957L	108
2SC957M	108
2SC957OR	108
2SC957R	108
2SC957X	108
2SC957XL	108
2SC957Y	108
2SC959	128
2SC959A	128
2SC959B	128
2SC959C	128
2SC959D	128
2SC959E	198
2SC959F	198
2SC959G	198
2SC959GN	198
2SC959H	198
2SC959J	198
2SC959K	198
2SC959L	198
2SC959M	128
2SC959OR	198
2SC959R	198
2SC959S	128
2SC959SA	128
2SC959SB	128
2SC959SC	128
2SC959SD	128
2SC959X	198
2SC959Y	198
2SC960SB	225
2SC961	328
2SC962	328
2SC963	123AP
2SC963-O	123AP
2SC964	123AP
2SC965	123AP
2SC966	123AP
2SC966A	192
2SC966B	192
2SC966C	192
2SC966D	192
2SC966E	192
2SC966F	192
2SC966G	192
2SC966GN	192
2SC966H	192
2SC966J	192
2SC966K	192
2SC966L	192
2SC966M	192
2SC966OR	192
2SC966R	192
2SC966X	192
2SC966Y	192
2SC967	123AP
2SC967A	192
2SC967B	192
2SC967C	192
2SC967D	192
2SC967E	192
2SC967F	192
2SC967G	192
2SC967GN	192
2SC967H	192
2SC967J	192
2SC967K	192
2SC967L	192
2SC967M	192
2SC967OR	192
2SC967R	192
2SC967X	192
2SC967Y	192
2SC968	123AP
2SC968A	123AP
2SC968B	123AP
2SC968C	123AP
2SC968D	123AP
2SC968E	123AP
2SC968F	123AP
2SC968G	123AP
2SC968GN	123AP
2SC968H	123AP
2SC968J	123AP
2SC968K	123AP
2SC968L	123AP
2SC968M	123AP
2SC968OR	123AP
2SC968P	123AP
2SC968R	123AP
2SC968X	123AP
2SC968Y	293
2SC969	123A
2SC970	123A
2SC971	192
2SC971A	195A
2SC971B	195A
2SC971BK	195A
2SC971C	195A
2SC971D	195A
2SC971E	195A
2SC971F	195A
2SC971G	195A
2SC971GN	195A
2SC971H	195A
2SC971J	195A
2SC971K	195A
2SC971L	195A
2SC971M	195A
2SC971OR	195A
2SC971R	195A
2SC971X	195A
2SC971Y	195A
2SC972	128
2SC972A	128
2SC972B	128
2SC972C	128
2SC972D	128
2SC972E	128
2SC972F	128
2SC972G	128
2SC972GN	128
2SC972H	128
2SC972J	128
2SC972K	128
2SC972L	128
2SC972M	128
2SC972OR	128
2SC972R	128
2SC972X	128
2SC972Y	128
2SC976TV	128
2SC979	199
2SC980	85
2SC980AG	85
2SC980AGO	85
2SC980G	85
2SC980GO	85
2SC980GY	85
2SC980O	85
2SC980Y	85
2SC981	175
2SC981G	161
2SC982	172A
2SC983	399
2SC983(O)	287
2SC983-0	399
2SC983-0(ECB)	287
2SC983-O	287
2SC983-R	287
2SC983-R(ECB)	287
2SC983-Y	287
2SC983A	287
2SC983C	287
2SC983D	287
2SC983FA-1	287
2SC983R	287
2SC983S	287
2SC983Y	287
2SC984	123AP
2SC984A	123AP
2SC984B	123AP
2SC984C	123AP
2SC984D	123AP
2SC984E	123AP
2SC984F	123AP
2SC984G	123AP
2SC984GN	123AP
2SC984H	123AP
2SC984J	123AP
2SC984L	123AP
2SC984M	123AP
2SC984OR	123AP
2SC984R	123AP
2SC984X	123AP
2SC984Y	123AP
2SC985	108
2SC985A	199
2SC987	161
2SC987A	161
2SC988	161
2SC988A	161
2SC988B	161
2SC990	152
2SC991	123AP
2SC991A	192
2SC991B	192
2SC991C	192
2SC991D	192
2SC991E	192
2SC991F	192
2SC991G	192
2SC991GN	192
2SC991H	192
2SC991J	192
2SC991K	192
2SC991L	192
2SC991M	192
2SC991OR	192
2SC991R	192
2SC991X	192
2SC991Y	192
2SC992	123AP
2SC992A	192
2SC992B	192
2SC992C	192
2SC992D	192
2SC992E	192
2SC992F	192
2SC992G	192
2SC992GN	192
2SC992H	192
2SC992J	192
2SC992K	192
2SC992L	192
2SC992M	192
2SC992OR	192
2SC992R	192
2SC992X	192
2SC992Y	192
2SC993	128
2SC993D	128
2SC993E	123AP
2SC994	311
2SC995	154
2SC995A	198
2SC995B	198
2SC995C	198
2SC995E	198
2SC995F	198
2SC995G	198
2SC995GN	198
2SC995H	198
2SC995J	198
2SC995K	198
2SC995L	198
2SC995M	198
2SC995OR	198
2SC995R	198
2SC995X	198
2SC995Y	198
2SC996	225
2SC997	161
2SC997A	229
2SC997B	229
2SC997C	229
2SC997D	229
2SC997E	229
2SC997F	229
2SC997G	229
2SC997GN	229
2SC997H	229
2SC997J	229
2SC997K	229
2SC997L	229
2SC997M	229
2SC997OR	229
2SC997R	229
2SC997X	229
2SC997Y	229
2SC998	278
2SC999	165
2SC999A	165
2SC999B	165
2SC999C	165
2SC999D	165
2SC999E	165
2SC999F	165
2SC999G	165
2SC999GN	165
2SC999H	165
2SC999J	165
2SC999K	165
2SC999L	165
2SC999M	165
2SC999OR	165
2SC999R	165
2SC999X	165
2SC999Y	165
2SC1000	199
2SC1000(GR)	199
2SC1000-BL	199
2SC1000-GR	199
2SC1000-Y	199
2SC1000A	199
2SC1000B	199
2SC1000BL	199
2SC1000C	199
2SC1000D	199
2SC1000E	199
2SC1000F	199
2SC1000G	199
2SC1000G-BL	199
2SC1000G-GR	199
2SC1000GN	199
2SC1000GR	199
2SC1000H	199
2SC1000J	199
2SC1000K	199
2SC1000L	199
2SC1000M	199
2SC1000OR	199
2SC1000R	199
2SC1000X	199
2SC1000Y	199
2SC1001	278
2SC1004	164
2SC1004A	164
2SC1004B	164
2SC1004C	164
2SC1004D	164
2SC1004E	164
2SC1004F	164
2SC1004G	164
2SC1004GN	164
2SC1004H	164
2SC1004J	164
2SC1004K	164
2SC1004L	164
2SC1004M	164
2SC1004OR	164
2SC1004R	164
2SC1004X	164
2SC1004Y	164
2SC1005	165
2SC1005A	165
2SC1005B	165
2SC1005C	165
2SC1005D	165
2SC1005E	165
2SC1005F	165
2SC1005G	165
2SC1005GN	165
2SC1005H	165
2SC1005J	165
2SC1005K	165
2SC1005L	165
2SC1005M	165
2SC1005OR	165
2SC1005R	165
2SC1005X	165
2SC1005Y	165
2SC1006	199
2SC1006A	199
2SC1006B	199
2SC1006C	199
2SC1007	123AP
2SC1008	128
2SC1008A	128
2SC1009	229
2SC1010	199
2SC1010A	199
2SC1010B	199
2SC1010C	199
2SC1010D	192
2SC1010E	192
2SC1010F	192
2SC1010G	192
2SC1010GN	192
2SC1010H	192
2SC1010J	192
2SC1010K	192
2SC1010L	192
2SC1010M	192
2SC1010OR	192
2SC1010R	192
2SC1010X	192
2SC1010Y	192
2SC1011	195A
2SC1012	154
2SC1012A	154
2SC1012B	154
2SC1012C	154
2SC1012D	154
2SC1012E	154
2SC1012F	154
2SC1012G	154
2SC1012GN	154
2SC1012H	154
2SC1012J	154
2SC1012K	154
2SC1012L	154
2SC1012M	154
2SC1012OR	154
2SC1012R	154
2SC1012X	154
2SC1012Y	154
2SC1013	300
2SC1013-OR	300
2SC1013A	300
2SC1013B	300
2SC1013C	300
2SC1013D	300
2SC1013E	300
2SC1013F	300
2SC1013G	300
2SC1013GN	300
2SC1013H	300
2SC1013J	300
2SC1013K	300
2SC1013L	300
2SC1013LJ	300
2SC1013M	300
2SC1013OR	300
2SC1013PJ	300
2SC1013R	300
2SC1013X	300
2SC1013Y	300
2SC1014	300
2SC1014A	300
2SC1014B	300
2SC1014BY	300
2SC1014C	300
2SC1014CD	300
2SC1014D	300
2SC1014D1	300
2SC1014E	300
2SC1014F	300
2SC1014G	300
2SC1014GA	300
2SC1014GN	300
2SC1014H	300
2SC1014J	300
2SC1014K	300
2SC1014L	300
2SC1014LG	300
2SC1014LR	300
2SC1014M	300
2SC1014OR	300
2SC1014R	300
2SC1014W	300
2SC1014X	300
2SC1014Y	300
2SC1015FA-1	290A
2SC1015NEW-Y	85
2SC1017	299
2SC1018	299
2SC1018A	299
2SC1018B	299
2SC1018C	299
2SC1018D	299
2SC1018E	299
2SC1018F	299
2SC1018G	299
2SC1018GN	299
2SC1018H	299
2SC1018J	299
2SC1018K	299
2SC1018L	299
2SC1018M	299
2SC1018R	299
2SC1018X	299
2SC1018Y	299
2SC1019C	152
2SC1021	374
2SC1023	123AP
2SC1023(0)	123AP
2SC1023(O)	123AP
2SC1023-0	123AP
2SC1023-Y	123AP
2SC1023A	123AP
2SC1023B	123AP
2SC1023C	123AP
2SC1023D	123AP
2SC1023E	123AP
2SC1023F	123
2SC1023G	123AP
2SC1023GN	123AP
2SC1023H	123AP
2SC1023J	123AP
2SC1023K	123AP
2SC1023L	123AP
2SC1023M	123AP
2SC1023OR	123AP
2SC1023R	123AP
2SC1023X	123AP
2SC1023Y	123AP
2SC1024	175
2SC1024(D)	175
2SC1024(F)	175
2SC1024-D2	175
2SC1024-E	175
2SC1024A	175
2SC1024B	175
2SC1024C	175
2SC1024D	175
2SC1024E	175
2SC1024F	175
2SC1024G	175
2SC1024L	175
2SC1024Y	175
2SC1025	175
2SC1025CTV	175
2SC1025D	175
2SC1025E	175
2SC1025J	175
2SC1025MT	175
2SC1026	290A
2SC1026(G)	108
2SC1026-0	108
2SC1026-R	108
2SC1026A	108
2SC1026B	108
2SC1026BL	108
2SC1026C	108
2SC1026D	108
2SC1026E	108
2SC1026F	108
2SC1026G	107
2SC1026GN	108
2SC1026GR	108
2SC1026H	108
2SC1026J	108
2SC1026K	108
2SC1026L	108
2SC1026M	108
2SC1026OR	108
2SC1026R	229
2SC1026X	108
2SC1026Y	107
2SC1027	163A
2SC1030	280
2SC1030-OR	280
2SC1030A	280
2SC1030B	280
2SC1030B2C	280
2SC1030C	280
2SC1030D	280
2SC1030E	280
2SC1030F	280
2SC1030G	280
2SC1030H	280
2SC1030J	280
2SC1030K	280
2SC1030L	280
2SC1030M	280
2SC1030OR	280
2SC1030R	280
2SC1030X	280
2SC1030Y	280
2SC1032	107
2SC1032(Y)	107
2SC1032A	229
2SC1032B	107
2SC1032BL	107
2SC1032C	107
2SC1032D	107
2SC1032E	107
2SC1032F	229
2SC1032G	107
2SC1032GN	107
2SC1032H	107
2SC1032J	107
2SC1032K	107
2SC1032L	107
2SC1032M	107
2SC1032OR	107
2SC1032R	107
2SC1032X	107
2SC1032Y	107
2SC1033	123AP
2SC1033A	123AP
2SC1033B	123AP
2SC1033C	123AP
2SC1033D	123AP
2SC1033E	123AP
2SC1033F	123AP
2SC1033G	123AP
2SC1033GN	123AP
2SC1033H	123AP
2SC1033J	123AP
2SC1033K	123AP
2SC1033L	123AP
2SC1033OR	123AP
2SC1033R	123AP
2SC1033X	123AP
2SC1033Y	123AP
2SC1035	161
2SC1035A	319P
2SC1035B	319P
2SC1035C	161
2SC1035D	161
2SC1035E	161
2SC1035F	319P
2SC1035GN	319P
2SC1035H	319P
2SC1035J	319P
2SC1035L	319P
2SC1035M	319P
2SC1035OR	319P
2SC1035R	319P
2SC1035X	319P
2SC1035Y	319P
2SC1036	161
2SC1036A	319P
2SC1036B	319P
2SC1036C	319P
2SC1036D	319P
2SC1036E	319P
2SC1036F	319P
2SC1036G	319P
2SC1036GN	319P
2SC1036H	319P
2SC1036J	319P
2SC1036K	319P
2SC1036L	319P
2SC1036M	319P
2SC1036OR	319P
2SC1036R	319P
2SC1036X	319P
2SC1036Y	319P
2SC1042	295
2SC1044	161
2SC1045	164
2SC1045(B)	165
2SC1045B	164
2SC1045C	164
2SC1045D	164
2SC1045E	164
2SC1045F	164
2SC1045G	164
2SC1045GN	164
2SC1045H	164
2SC1045J	164
2SC1045K	164
2SC1045L	164
2SC1045M	164
2SC1045OR	164
2SC1045R	164
2SC1045X	164
2SC1045Y	164
2SC1046	165
2SC1046-OR	165
2SC1046A	165
2SC1046B	165
2SC1046C	165
2SC1046D	165
2SC1046E	165
2SC1046F	165
2SC1046G	165
2SC1046GN	165
2SC1046H	165
2SC1046J	165
2SC1046K	165
2SC1046L	165
2SC1046M	165
2SC1046N	165
2SC1046OR	165
2SC1046R	165
2SC1046X	165
2SC1046Y	165
2SC1047	107
2SC1047(C)	107
2SC1047-C	107
2SC1047A	107
2SC1047B	107
2SC1047BC	107
2SC1047BCD	107
2SC1047C	107
2SC1047D	107
2SC1047E	107
2SC1047F	107
2SC1047G	107
2SC1047GN	107
2SC1047GR	107
2SC1047H	107
2SC1047J	107
2SC1047K	107
2SC1047L	107
2SC1047M	107
2SC1047R	107

PART NUMBER	NTE REPLACEMENT
2SC1047X	107
2SC1047Y	107
2SC1048	154
2SC1048B	154
2SC1048C	154
2SC1048D	154
2SC1048D,C	154
2SC1048DC	161
2SC1048E	154
2SC1048F	154
2SC1048N	154
2SC1050	94
2SC1050D	94
2SC1050E	94
2SC1050F	94
2SC1051	280
2SC1051C	280
2SC1051D	280
2SC1051E	280
2SC1051F	280
2SC1051LC	280
2SC1051LD	280
2SC1051LE	280
2SC1051LF	280
2SC1052	297
2SC1053	297
2SC1054	161
2SC1055	384
2SC1055H	384
2SC1055U	384
2SC1056	154
2SC1056A	198
2SC1056B	198
2SC1056C	198
2SC1056D	198
2SC1056E	198
2SC1056F	198
2SC1056G	198
2SC1056GN	198
2SC1056H	198
2SC1056J	198
2SC1056K	198
2SC1056L	198
2SC1056M	198
2SC1056OR	198
2SC1056R	198
2SC1056X	198
2SC1056Y	198
2SC1059	124
2SC1059A	124
2SC1059B	124
2SC1059C	124
2SC1059D	124
2SC1059E	124
2SC1059F	124
2SC1059G	124
2SC1059GN	124
2SC1059H	124
2SC1059J	124
2SC1059K	124
2SC1059L	124
2SC1059M	124
2SC1059OR	124
2SC1059R	124
2SC1059X	124
2SC1059Y	124
2SC1060	152
2SC1060(C,D)	152
2SC1060A	152
2SC1060B	152
2SC1060BL	152
2SC1060BM	152
2SC1060BY	152
2SC1060C	152
2SC1060D	152
2SC1060E	152
2SC1060F	152
2SC1060G	152
2SC1060GN	152
2SC1060H	152
2SC1060J	152
2SC1060K	152
2SC1060L	152
2SC1060M	152
2SC1060OR	152
2SC1060R	152
2SC1060X	152
2SC1060Y	152
2SC1061	152
2SC1061(B)	152
2SC1061(C)	152
2SC1061-0	152
2SC1061A	152
2SC1061B	152
2SC1061BM	152
2SC1061BT	152
2SC1061C	152
2SC1061D	152
2SC1061KA	152
2SC1061KB	152
2SC1061KC	152
2SC1061T	152
2SC1061T-B	152
2SC1061TB	152
2SC1062	154
2SC1063	293
2SC1064	297
2SC1066	316
2SC1067	161
2SC1068	278
2SC1069	224
2SC1070	161
2SC1071	123AP
2SC1072	128
2SC1072A	128
2SC1072B	293
2SC1072C	293
2SC1072D	293
2SC1072E	293
2SC1072F	293
2SC1072G	293
2SC1072GN	293
2SC1072H	293
2SC1072J	293
2SC1072K	293
2SC1072L	293
2SC1072M	293
2SC1072OR	293
2SC1072R	293
2SC1072X	293
2SC1072Y	293
2SC1078	124
2SC1079	280
2SC1079-R	162
2SC1079R	280
2SC1079Y	280
2SC1080	280
2SC1080-R	128
2SC1080R	280
2SC1080Y	280
2SC1083	346
2SC1084	229
2SC1085	175
2SC1086	165
2SC1086A	165
2SC1086B	165
2SC1086C	165
2SC1086D	165
2SC1086E	165
2SC1086F	165
2SC1086G	165
2SC1086GN	165
2SC1086H	165
2SC1086J	165
2SC1086K	165
2SC1086L	165
2SC1086M	165
2SC1086OR	165
2SC1086R	165
2SC1086X	165
2SC1086Y	165
2SC1088	171
2SC1089	171
2SC1089(B,D)	171
2SC1089B	171
2SC1089C	171
2SC1089D	171
2SC1090	154
2SC1090D	154
2SC1091A	186
2SC1095	186A
2SC1095(6)	186A
2SC1095L	186A
2SC1095M	186A
2SC1096	186A
2SC1096(M)	186A
2SC1096-3ZM	186A
2SC1096-4ZL	186A
2SC1096-OR	186A
2SC1096A	186A
2SC1096B	186A
2SC1096C	186A
2SC1096D	186A
2SC1096E	186A
2SC1096F	186A
2SC1096G	186A
2SC1096GN	186A
2SC1096H	186A
2SC1096J	186A
2SC1096K	186A
2SC1096L	186A
2SC1096LM	186A
2SC1096M	186A
2SC1096N	186A
2SC1096OR	186A
2SC1096Q	186A
2SC1096R	186A
2SC1096W	186A
2SC1096X	186A
2SC1096Y	186A
2SC1098	186A
2SC1098(4)K	186A
2SC1098(4)L	186A
2SC1098(L)	186A
2SC1098(M)	186A
2SC1098-42M	186A
2SC1098A	186A
2SC1098B	186A
2SC1098C	186A
2SC1098D	186A
2SC1098L	186A
2SC1098M	186A
2SC1099	165
2SC1099(K)	165
2SC1099K	165
2SC1100	165
2SC1100A	165
2SC1100B	165
2SC1100C	165
2SC1100D	165
2SC1100E	165
2SC1100F	165
2SC1100G	165
2SC1100GN	165
2SC1100H	165
2SC1100J	165
2SC1100K	165
2SC1100L	165
2SC1100M	165
2SC1100OR	165
2SC1100R	165
2SC1100X	165
2SC1100Y	165
2SC1101	164
2SC1101A	164
2SC1101B	164
2SC1101C	164
2SC1101D	164
2SC1101E	164
2SC1101F	164
2SC1101G	164
2SC1101GN	164
2SC1101H	164
2SC1101J	164
2SC1101K	164
2SC1101L	164
2SC1101M	164
2SC1101OR	164
2SC1101R	164
2SC1101X	164
2SC1101Y	164
2SC1102	124
2SC1102(L)	124
2SC1102(M)	124
2SC1102A	124
2SC1102B	124
2SC1102C	124
2SC1102K	124
2SC1102L	124
2SC1102M	124
2SC1103	154
2SC1103(A)	154
2SC1103(L)	124
2SC1103A	154
2SC1103B	154
2SC1103C	154
2SC1103L	154
2SC1105	124
2SC1105(K)	124
2SC1105(L)	124
2SC1105(M)	124
2SC1105A	124
2SC1105B	124
2SC1105C	124
2SC1105D	124
2SC1105E	124
2SC1105F	124
2SC1105G	124
2SC1105GN	124
2SC1105H	124
2SC1105J	124
2SC1105K	124
2SC1105L	124
2SC1105M	124
2SC1105OR	124
2SC1105R	124
2SC1105X	124
2SC1105Y	124
2SC1106	94
2SC1106(K)	162
2SC1106(L)	162
2SC1106(M)	162
2SC1106A	94
2SC1106B	162
2SC1106C	162
2SC1106K	162
2SC1106L	162
2SC1106M	162
2SC1106P	94
2SC1106PQ	283
2SC1106Q	94
2SC1107	186A
2SC1107Q	186A
2SC1107YG	186
2SC1108	291
2SC1109	291
2SC1110	291
2SC1111	280
2SC1112	328
2SC1114	94
2SC1115	280
2SC1116	284
2SC1116-0	154
2SC1116-O	162
2SC1117	161
2SC1117A	108
2SC1117B	108
2SC1117C	108
2SC1117D	108
2SC1117E	108
2SC1117F	108
2SC1117G	108
2SC1117GN	108
2SC1117H	108
2SC1117J	108
2SC1117K	108
2SC1117L	108
2SC1117M	108
2SC1117OR	108
2SC1117R	108
2SC1117X	108
2SC1117Y	108
2SC1123	107
2SC1123A	229
2SC1123B	229
2SC1123C	229
2SC1123D	229
2SC1123E	229
2SC1123F	229
2SC1123GN	229
2SC1123H	229
2SC1123J	229
2SC1123K	229
2SC1123L	229
2SC1123M	229
2SC1123OR	229
2SC1123R	229
2SC1123X	229
2SC1123Y	229
2SC1124	190
2SC1124-OR	190
2SC1124A	190
2SC1124B	190
2SC1124C	190
2SC1124D	190
2SC1124E	190
2SC1124F	190
2SC1124G	190
2SC1124GN	190
2SC1124H	190
2SC1124J	190
2SC1124K	190
2SC1124L	190
2SC1124M	190
2SC1124OR	190
2SC1124R	190
2SC1124X	190
2SC1124Y	190
2SC1126	107
2SC1126A	229
2SC1126B	229
2SC1126E	229
2SC1126F	229
2SC1126GN	229
2SC1126J	229
2SC1126K	229
2SC1126L	229
2SC1126M	229
2SC1126OR	229
2SC1126R	229
2SC1126X	229
2SC1126Y	229
2SC1127	171
2SC1127-0	171
2SC1127-OR	171
2SC1127A	171
2SC1127B	171
2SC1127C	171
2SC1127D	171
2SC1127E	171
2SC1127F	171
2SC1127G	171
2SC1127GA	171
2SC1127GN	171
2SC1127H	171
2SC1127J	171
2SC1127JR	171
2SC1127K	171
2SC1127L	171
2SC1127M	171
2SC1127OR	171
2SC1127R	171
2SC1127X	171
2SC1127Y	171
2SC1128	229
2SC1128(M)	161
2SC1128(S)	161
2SC1128-0	161
2SC1128A	161
2SC1128B	161
2SC1128BL	161
2SC1128C	229
2SC1128D	161
2SC1128G	161
2SC1128H	161
2SC1128M	161
2SC1128R	161
2SC1128S	161
2SC1128Y	161
2SC1129	161
2SC1129(M)	161
2SC1129(R)	161
2SC1129-0	161
2SC1129A	161
2SC1129B	161
2SC1129BL	161
2SC1129C	161
2SC1129G	161
2SC1129M	161
2SC1129R	161
2SC1129Y	161
2SC1130	164
2SC1131	163A
2SC1132	165
2SC1133	165
2SC1138	375
2SC1140	283
2SC1141	283
2SC1142	283
2SC1143	283
2SC1150	297
2SC1151	164
2SC1151A	164
2SC1152	162
2SC1152(F)	162
2SC1152F	162
2SC1152G	162
2SC1153	165
2SC1153A	165
2SC1154	163A
2SC1155	190
2SC1156	190
2SC1156A	198
2SC1156B	198
2SC1156C	198
2SC1156D	198
2SC1156E	198
2SC1156F	198
2SC1156G	198
2SC1156GN	198
2SC1156H	198
2SC1156K	198
2SC1156L	198
2SC1156M	198
2SC1156OR	198
2SC1156R	198
2SC1156X	198
2SC1156Y	198
2SC1157	190
2SC1157A	198
2SC1157B	198
2SC1157C	198
2SC1157E	198
2SC1157F	198
2SC1157G	198
2SC1157GN	198
2SC1157H	198
2SC1157J	198
2SC1157K	198
2SC1157L	198
2SC1157M	198
2SC1157OR	198
2SC1157R	198
2SC1157X	198
2SC1157Y	198
2SC1158	108
2SC1159	107
2SC1160	175
2SC1160(L)	198
2SC1160-0	297
2SC1160K	175
2SC1160L	175
2SC1161	175
2SC1162	373
2SC1162(C)	184
2SC1162(RF-PWR)	184
2SC1162A	184
2SC1162B	184
2SC1162C(RF-PWR)	184
2SC1162CP	184
2SC1162MP	184
2SC1162W	373
2SC1162WB	184
2SC1162WBP	184
2SC1162WT	184
2SC1162WTA	184
2SC1162WTB	184
2SC1162WTC	184
2SC1162WTD	184
2SC1164	278
2SC1165	327
2SC1166	289A
2SC1166-0	289A
2SC1166-GR	289A
2SC1166-O	289A
2SC1166-R	289A
2SC1166-Y	289A
2SC1166D	289A
2SC1166GR	289A
2SC1166O	289A
2SC1166R	289A
2SC1166X	289A
2SC1166Y	289A
2SC1167	238
2SC1168	124
2SC1168X	124
2SC1169	224
2SC1170	238
2SC1170(B)	238
2SC1170-B	389
2SC1170-OR	238
2SC1170A	238
2SC1170B	238
2SC1170BFA-2	238
2SC1170C	238
2SC1170D	238
2SC1170E	238
2SC1170F	238
2SC1170FA-2	238
2SC1170G	238
2SC1170GN	238
2SC1170H	238
2SC1170J	238
2SC1170K	238
2SC1170L	238
2SC1170M	238
2SC1170OR	238
2SC1170R	238
2SC1170X	238
2SC1170Y	238
2SC1171	165
2SC1172	163A
2SC1172A	165
2SC1172B	238
2SC1172C	238
2SC1172D	238
2SC1172E	238
2SC1172F	238
2SC1172G	238
2SC1172GN	238
2SC1172H	238
2SC1172J	238
2SC1172K	238
2SC1172L	238
2SC1172M	238
2SC1172R	238
2SC1172X	238
2SC1172Y	238
2SC1173	152
2SC1173(0)	235
2SC1173(R.F.PWR)	235
2SC1173-0	152
2SC1173-B	235
2SC1173-C	235
2SC1173-GR	235
2SC1173-O	152
2SC1173-R	235
2SC1173-Y	152
2SC1173A	235
2SC1173B	235
2SC1173C	235
2SC1173GR	235
2SC1173R	235
2SC1173X	235
2SC1173X0	235
2SC1173X(RF-PWR)	236
2SC1173X(Y)	235
2SC1173XO	235
2SC1173XY	235
2SC1173Y	152
2SC1174	152
2SC1174-OR	238
2SC1174A	238
2SC1174B	238
2SC1174C	238
2SC1174D	238
2SC1174E	238
2SC1174F	238
2SC1174G	238
2SC1174GN	238
2SC1174H	238
2SC1174J	238
2SC1174K	238
2SC1174L	238
2SC1174M	238
2SC1174OR	238
2SC1174R	238
2SC1174X	238
2SC1174Y	238
2SC1175	289A
2SC1175(D,E,F)	289A
2SC1175-C	289A
2SC1175A	90
2SC1175C	289A
2SC1175CTV	289A
2SC1175D	289A
2SC1175E	289A
2SC1175E,D,F	289A
2SC1175F	289A
2SC1177	325
2SC1178A	320
2SC1180	161
2SC1182	229
2SC1182B	161
2SC1182C	161
2SC1182D	161
2SC1184	164
2SC1184A	164
2SC1184B	164
2SC1184C	164
2SC1184D	164
2SC1184E	164
2SC1185	162
2SC1185A	162
2SC1185B	162
2SC1185C	162
2SC1185K	162
2SC1185L	162
2SC1185M	162
2SC1187	229
2SC1188-0	229
2SC1189	229
2SC1189L	229
2SC1195	94
2SC1195(FA-1)	94
2SC1195FA1	94
2SC1195FA-1	94
2SC1199	194
2SC1204	289A
2SC1204B	289A
2SC1204C	289A
2SC1204D	289A
2SC1205	199
2SC1205A	289A
2SC1205B	108
2SC1205C	289A
2SC1206	128
2SC1209	85
2SC1209(BCE)	85
2SC1209(C)	85
2SC1209C	85
2SC1209C(BCE)	85
2SC1209D	85
2SC1209D(BCE)	85
2SC1209E	85
2SC1209E(BCE)	85
2SC1210	85
2SC1210(BCE)	85
2SC1210C	85
2SC1210C(BCE)	85
2SC1210D	85
2SC1210D(BCE)	85
2SC1210E	85
2SC1211	289A
2SC1211(BCE)	289A
2SC1211C	289A
2SC1211C(BCE)	289A
2SC1211D	289A
2SC1211D(BCE)	289A
2SC1211E	289A
2SC1211E(BCE)	289A
2SC1212	373
2SC1212A	373
2SC1212AA	373
2SC1212AB	373
2SC1212ABWT	373
2SC1212AC	373
2SC1212ACWT	373
2SC1212AD	373
2SC1212AWT	373
2SC1212AWTA	373
2SC1212AWTB	373
2SC1212AWTC	373
2SC1212AWTD	373
2SC1212B	373
2SC1212C	373
2SC1212D	373
2SC1212WT	373
2SC1212WTA	373
2SC1212WTB	373
2SC1212WTC	373
2SC1212WTD	373
2SC1213	289A
2SC1213(A)	289A
2SC1213(B)	289A
2SC1213(C)	289A
2SC1213(D)	289A
2SC1213-OR	289A
2SC1213A	289A
2SC1213A(C)	289A
2SC1213A-C	289A
2SC1213AA	289A
2SC1213AB	289A
2SC1213AC	289A
2SC1213AD	289A
2SC1213AK	289A
2SC1213AKA	289A
2SC1213AKB	289A
2SC1213AKC	289A
2SC1213AKD	289A
2SC1213B	289A
2SC1213BC	289A
2SC1213C	289A
2SC1213CD	289A
2SC1213D	289A
2SC1213D-24	289A
2SC1213DC	289A
2SC1213E	289A
2SC1213F	289A
2SC1213G	289A
2SC1213GN	289A
2SC1213H	289A
2SC1213J	289A
2SC1213K	289A
2SC1213L	289A
2SC1213M	289A
2SC1213OR	289A
2SC1213Q	289A
2SC1213X	289A
2SC1213Y	289A
2SC1214	289A
2SC1214(B)	289A
2SC1214A	289A
2SC1214B	289A
2SC1214C	289A
2SC1214D	289A
2SC1215	107
2SC1215C	107
2SC1215D	107
2SC1215E	107
2SC1215F	107
2SC1215G	107
2SC1215GN	107
2SC1215H	107
2SC1215J	107
2SC1215K	107
2SC1215L	107
2SC1215M	107
2SC1215OR	107
2SC1215R	107
2SC1215X	107
2SC1215Y	107
2SC1216	229
2SC1217	171
2SC1218	128
2SC1219	289A
2SC1220	289A
2SC1220(E)	289A
2SC1220-003	289A
2SC1220A	289A
2SC1220A(QPR)	289A
2SC1220AP	289A
2SC1220AQ	289A
2SC1220AR	289A
2SC1220E	289A
2SC1220F	289A
2SC1220P	289A
2SC1220Q	289A
2SC1220R	289A
2SC1222	199
2SC1222A	199
2SC1222B	199
2SC1222C	199
2SC1222D	199
2SC1222E	199
2SC1222U	199
2SC1223	278
2SC1226	186A
2SC1226(A)	186A
2SC1226(AP)	186A
2SC1226(P)	186A
2SC1226(R)	186A
2SC1226-0	186A
2SC1226A	186A
2SC1226A(P)	186A
2SC1226A(Q)	186A
2SC1226A(QPR)	186A
2SC1226A(R)	186A

PART NUMBER	NTE REPLACEMENT
2SC1226AC	186A
2SC1226ACF	186A
2SC1226AF	186A
2SC1226AP	186A
2SC1226AQ	186A
2SC1226AR	186A
2SC1226ARL	186A
2SC1226B	186A
2SC1226BL	186A
2SC1226C	186A
2SC1226CF	186A
2SC1226D	186A
2SC1226E	186A
2SC1226F	186A
2SC1226G	186A
2SC1226H	186A
2SC1226L	186A
2SC1226O	186A
2SC1226OR	186A
2SC1226P	186A
2SC1226Q	186A
2SC1226QR	186A
2SC1226R	186A
2SC1226RL	186A
2SC1226RL-P	186A
2SC1226RL-Q	186A
2SC1226RL-R	186A
2SC1226RL/P	186A
2SC1226RLP	186A
2SC1226RLQ	186A
2SC1226RLR	186A
2SC1226SC	186A
2SC1226SFQ1	186A
2SC1226Y	186A
2SC1227	162
2SC1228	283
2SC1229	198
2SC1229Q	198
2SC1229R	198
2SC1230	283
2SC1231	194
2SC1235	124
2SC1235A	124
2SC1235AL	124
2SC1235AM	124
2SC1235G	124
2SC1236	229
2SC1237	235
2SC1237E	235
2SC1239	237
2SC1240	229
2SC1241	325
2SC1243	300
2SC1243-24	300
2SC1243C	300
2SC1243C1	300
2SC1243C2	300
2SC1243D	300
2SC1243D1	300
2SC1243D2	300
2SC1243E	300
2SC1244	123AP
2SC1246	289A
2SC1246A	289A
2SC1246AB	289A
2SC1246AF	289A
2SC1246AFV	289A
2SC1246AG	289A
2SC1246AV	289A
2SC1246F	289A
2SC1246FB	289A
2SC1246FG	289A
2SC1247	289A
2SC1247A	289A
2SC1247AB	289A
2SC1247AF	289A
2SC1247AFB	289A
2SC1247AFG	289A
2SC1247AFV	289A
2SC1247AG	289A
2SC1247AV	289A
2SC1247F	289A
2SC1252	224
2SC1254	161
2SC1256	327
2SC1257	325
2SC1258	325
2SC1259	320
2SC1260	316
2SC1266	128
2SC1274	123A
2SC1275	316
2SC1276	199
2SC1277	297
2SC1278	194
2SC1278S	194
2SC1279	194
2SC1279S	194
2SC1280	172A
2SC1280A	172A
2SC1280AS	172A
2SC1280S	172A
2SC1281	123AP
2SC1282	297
2SC1283	123AP
2SC1285	289A
2SC1285S	289A
2SC1292	163A
2SC1293	107
2SC1293(3RD IF)	233
2SC1293(3RD-IF)	233
2SC1293(A)	233
2SC1293A	233
2SC1293A(LAST IF)	233
2SC1293A(LAST-IF)	233
2SC1293B	233
2SC1293B(3RD IF)	233
2SC1293B(3RD-IF)	233
2SC1293B(FINAL IF)	233
2SC1293B(FINAL-IF)	233
2SC1293B(LAST IF)	233
2SC1293B(LAST-IF)	233
2SC1293B(LASTIF)	233
2SC1293C	233
2SC1293C(3RD IF)	233
2SC1293C(3RD-IF)	233
2SC1293D	233
2SC1295	165
2SC1295-O	389
2SC1295A	165
2SC1296	163A
2SC1298	320
2SC1303	346
2SC1304	124
2SC1304BK	124
2SC1306	235
2SC1306A	235
2SC1306I	235
2SC1306K	235
2SC1307	236
2SC1307-1	236
2SC1307AQ	236
2SC1308	165
2SC1308(K)	238
2SC1308K	238
2SC1308L	238
2SC1308N	238
2SC1309	165
2SC1310	85
2SC1310D	85
2SC1310E	85
2SC1310F	85
2SC1311	85
2SC1311D	85
2SC1311E	85
2SC1311F	85
2SC1312	199
2SC1312A	199
2SC1312C	199
2SC1312D	199
2SC1312E	199
2SC1312F	199
2SC1312G	199
2SC1312GN	199
2SC1312H	199
2SC1312J	199
2SC1312K	199
2SC1312L	199
2SC1312M	199
2SC1312OR	199
2SC1312R	199
2SC1312X	199
2SC1312Y	199
2SC1312YF	199
2SC1312YG	199
2SC1312YH	199
2SC1313	199
2SC1313B	199
2SC1313DC	289A
2SC1313F	199
2SC1313G	199
2SC1313H	199
2SC1313Y	199
2SC1313YE	199
2SC1313YG	199
2SC1313YH	199
2SC1314	320
2SC1315	154
2SC1317	289A
2SC1317(P)	289A
2SC1317(R)	289A
2SC1317(S)	289A
2SC1317-OR	289A
2SC1317-Q	289A
2SC1317-R	289A
2SC1317-T	289A
2SC1317A	289A
2SC1317B	289A
2SC1317BC	289A
2SC1317C	289A
2SC1317D	289A
2SC1317E	289A
2SC1317G	289A
2SC1317GR	289A
2SC1317L	289A
2SC1317N	289A
2SC1317NC	289A
2SC1317OR	289A
2SC1317P	289A
2SC1317Q	289A
2SC1317R	289A
2SC1317S	289A
2SC1317T	289A
2SC1317V	289A
2SC1317Y	289A
2SC1318	289A
2SC1318(P)	289A
2SC1318(P,R)	289A
2SC1318(Q)	289A
2SC1318(R)	289A
2SC1318(S)	289A
2SC1318-R	289A
2SC1318-S	289A
2SC1318A	289A
2SC1318B	289A
2SC1318C	289A
2SC1318E	289A
2SC1318F	289A
2SC1318G	289A
2SC1318GN	289A
2SC1318H	289A
2SC1318J	289A
2SC1318K	289A
2SC1318L	289A
2SC1318M	289A
2SC1318NC	289A
2SC1318P	289A
2SC1318PQR	289A
2SC1318PR	289A
2SC1318Q	289A
2SC1318QP	289A
2SC1318QR	289A
2SC1318R	128
2SC1318S	289A
2SC1318S,R	289A
2SC1318T	289A
2SC1318X	289A
2SC1318Y	289A
2SC1319	161
2SC1320(K)	229
2SC1320A	229
2SC1320B	229
2SC1320C	229
2SC1320D	229
2SC1320E	229
2SC1320F	229
2SC1320G	229
2SC1320GN	229
2SC1320H	229
2SC1320J	229
2SC1320K	107
2SC1320L	229
2SC1320M	229
2SC1320OR	229
2SC1320R	229
2SC1320X	229
2SC1320Y	229
2SC1321	161
2SC1322	280
2SC1324	123AP
2SC1324(C)	123AP
2SC1324C	123AP
2SC1325	165
2SC1325A	165
2SC1325AK	165
2SC1325AL	165
2SC1327	199
2SC1327FS	199
2SC1327Q	199
2SC1327R	199
2SC1327S	199
2SC1327T	199
2SC1327TU	199
2SC1327TV	199
2SC1327U	199
2SC1328	199
2SC1328(U)	199
2SC1328(U)(T)	199
2SC1328T	199
2SC1328U	199
2SC1330	192A
2SC1330A	192A
2SC1330B	192A
2SC1330C	192A
2SC1330D	192A
2SC1330L	192A
2SC1330R	192A
2SC1331	161
2SC1335	199
2SC1335(E)	199
2SC1335-OR	199
2SC1335A	199
2SC1335B	199
2SC1335C	199
2SC1335D	199
2SC1335E	199
2SC1335F	199
2SC1335G	199
2SC1335GN	199
2SC1335H	199
2SC1335J	199
2SC1335K	199
2SC1335L	199
2SC1335M	199
2SC1335OR	199
2SC1335R	199
2SC1335X	199
2SC1335Y	199
2SC1336	108
2SC1336JK	108
2SC1342	229
2SC1342(A)	229
2SC1342(B)	229
2SC1342(C)	229
2SC1342-OR	229
2SC1342A	229
2SC1342B	229
2SC1342C	229
2SC1342D	229
2SC1342E	229
2SC1342F	229
2SC1342G	229
2SC1342GN	229
2SC1342H	229
2SC1342J	229
2SC1342K	229
2SC1342L	229
2SC1342M	229
2SC1342OR	229
2SC1342R	229
2SC1342X	229
2SC1342Y	229
2SC1343	280
2SC1343A	280
2SC1343B	280
2SC1343BL	280
2SC1343C	280
2SC1343D	280
2SC1343E	280
2SC1343F	280
2SC1343G	280
2SC1343G-R	280
2SC1343GN	280
2SC1343H	280
2SC1343HA	280
2SC1343HB	280
2SC1343J	280
2SC1343K	280
2SC1343L	280
2SC1343M	280
2SC1343O	280
2SC1343OR	280
2SC1343R	280
2SC1343X	280
2SC1343Y	280
2SC1344	199
2SC1344(E)	199
2SC1344C	199
2SC1344D	199
2SC1344E	199
2SC1344F	199
2SC1345	199
2SC1345(E)	199
2SC1345C	199
2SC1345D	199
2SC1345E	199
2SC1345F	199
2SC1346	192
2SC1346(R)	192
2SC1346Q	192
2SC1346R	192
2SC1346S	192
2SC1347	192
2SC1347(Q)	192
2SC1347A	192
2SC1347B	192
2SC1347C	192
2SC1347D	192
2SC1347F	192
2SC1347G	192
2SC1347L	192
2SC1347Q	192
2SC1347R	192
2SC1347RQ	192
2SC1347S	192
2SC1347X	192
2SC1347Y	192
2SC1348	163A
2SC1349	194
2SC1351	224
2SC1352	123AP
2SC1353	224
2SC1358	238
2SC1358A	238
2SC1358K	238
2SC1358K1	238
2SC1358K2	238
2SC1358K3	238
2SC1358L	238
2SC1358P	238
2SC1358Q	238
2SC1358R	238
2SC1359	85
2SC1359(A)	85
2SC1359(B)	85
2SC1359(C)	85
2SC1359(C,B)	85
2SC1359C	85
2SC1359P	85
2SC1360	199
2SC1360-0	199
2SC1360A	199
2SC1360ANC	199
2SC1361	289A
2SC1362	289A
2SC1363	85
2SC1364	85
2SC1364-4	289A
2SC1364-5	85
2SC1364-6	289A
2SC1364-7	85
2SC1364-8	85
2SC1364-OR	289A
2SC1364A	289A
2SC1364B	289A
2SC1364C	289A
2SC1364D	289A
2SC1364E	289A
2SC1364H	289A
2SC1364K	289A
2SC1364L	289A
2SC1364M	289A
2SC1364OR	289A
2SC1364P	289A
2SC1364R	289A
2SC1364X	289A
2SC1364Y	289A
2SC1367	164
2SC1367A	164
2SC1368	184
2SC1368(B)	184
2SC1368B	184
2SC1368C	184
2SC1368D	186A
2SC1372	289A
2SC1372B	289A
2SC1372G	289A
2SC1372V	289A
2SC1372Y	289A
2SC1373	199
2SC1374	199
2SC1374H	108
2SC1375	199
2SC1376	123AP
2SC1377	236
2SC1380	199
2SC1380-BL	199
2SC1380-GR	199
2SC1380A	199
2SC1380A-BL	199
2SC1380A-GR	199
2SC1381	295
2SC1382	373
2SC1382-0	373
2SC1382-0	373
2SC1382Y	373
2SC1383	293
2SC1383(P,Q,R)	293
2SC1383(S)	293
2SC1383-P	293
2SC1383-Q	293
2SC1383-QR	293
2SC1383-R	293
2SC1383,RS	293
2SC1383NC	293
2SC1383NC-P	293
2SC1383NC-Q	293
2SC1383NC-R	293
2SC1383NCPQR	293
2SC1383P	293
2SC1383Q	293
2SC1383R	293
2SC1383RS	293
2SC1383S	293
2SC1383X	293
2SC1384	293
2SC1384(Q)	293
2SC1384-OR	293
2SC1384A	293
2SC1384B	293
2SC1384C	293
2SC1384D	293
2SC1384E	293
2SC1384F	293
2SC1384G	293
2SC1384GN	293
2SC1384H	293
2SC1384J	293
2SC1384K	293
2SC1384L	293
2SC1384M	293
2SC1384OR	293
2SC1384Q	293
2SC1384Q,R	293
2SC1384R	293
2SC1384RS	293
2SC1384S	293
2SC1384X	293
2SC1384Y	293
2SC1385	297
2SC1385H	293
2SC1386	128
2SC1386H	192
2SC1387	194
2SC1388	224
2SC1390	289
2SC1390(L,Y)	289
2SC1390(V)	289
2SC1390(W)	289
2SC1390(X)	289
2SC1390(Y)	289
2SC1390AE	289
2SC1390I	289
2SC1390IW	289
2SC1390J	123A
2SC1390JX	289
2SC1390K	289
2SC1390L	289
2SC1390V	289
2SC1390W	289
2SC1390WH	289
2SC1390WI	289
2SC1390WX	289
2SC1390X	289
2SC1390XJ	289
2SC1390XK	289
2SC1390Y	289
2SC1390YM	289
2SC1391	124
2SC1391VL	124
2SC1393	229
2SC1393K	229
2SC1393L	229
2SC1393M	229
2SC1394	229
2SC1395	107
2SC1396	107
2SC1398	152
2SC1398P	152
2SC1398Q	152
2SC1399	373
2SC1399E	373
2SC1400	90
2SC1402	280
2SC1403	284
2SC1403A	284
2SC1406	192A
2SC1406(P)	192A
2SC1406P	192A
2SC1406Q	192
2SC1407	192
2SC1407(Q)	192
2SC1407B	192
2SC1407P	192
2SC1407Q	192
2SC1407R	192
2SC1407S	192
2SC1407X	192
2SC1409	291
2SC1409(B)	152
2SC1409(C)	124
2SC1409A	291
2SC1409AA	291
2SC1409AB	291
2SC1409AC	291
2SC1409B	291
2SC1409C	291
2SC1410	291
2SC1410A	291
2SC1410AA	291
2SC1410AB	291
2SC1410AC	291
2SC1410B	291
2SC1410C	291
2SC1411	161
2SC1412	194
2SC1413	165
2SC1413A	165
2SC1413AV	165
2SC1413B	165
2SC1413C	165
2SC1413D	165
2SC1413E	165
2SC1413F	165
2SC1413G	165
2SC1413GN	165
2SC1413K	165
2SC1413L	165
2SC1413R	165
2SC1413X	165
2SC1413Y	165
2SC1416	123A
2SC1416A	123A
2SC1416BL	123A
2SC1417	107
2SC1417(V,G)	107
2SC1417(W)	107
2SC1417C	107
2SC1417D	107
2SC1417DU	107
2SC1417F	107
2SC1417G	107
2SC1417H	107
2SC1417U	107
2SC1417V	107
2SC1417VF	107
2SC1417VW	107
2SC1417W	107
2SC1418	152
2SC1418A	152
2SC1418B	152
2SC1418C	152
2SC1418D	152
2SC1419	152
2SC1419A	152
2SC1419B	152
2SC1419C	152
2SC1419D	152
2SC1424	316
2SC1426	224
2SC1427	229
2SC1429	188
2SC1429-1	188
2SC1429-2	188
2SC1431	175
2SC1433	163A
2SC1434	283
2SC1436	283
2SC1437-NC	399
2SC1438	123AP
2SC1439	123AP
2SC1440	283
2SC1441	283
2SC1444	196
2SC1445	196
2SC1446	376
2SC1446(Q)	376
2SC1446-0	376
2SC1446B	376
2SC1446C	376
2SC1446L	376
2SC1446LB	376
2SC1446LB11	198
2SC1446LL	376
2SC1446P	376
2SC1446PQ	376
2SC1446Q	376
2SC1446R	376
2SC1447	376
2SC1447(R)	396
2SC1447-0	396
2SC1447-0	396
2SC1447/FA-2	396
2SC1447A	396
2SC1447BK	396
2SC1447GL	396
2SC1447GL3	396
2SC1447GLE	396
2SC1447LB	396
2SC1447R	396
2SC1448	375
2SC1448A	291
2SC1448C	291
2SC1448LB	291
2SC1448P	291
2SC1448Q	291
2SC1448R	291
2SC1448S	291
2SC1449	184
2SC1449(CB)	184
2SC1449CB	184
2SC1449K	184
2SC1449L	184
2SC1449M	184
2SC1450	152
2SC1450S	152
2SC1451	287
2SC1452	287
2SC1453	199
2SC1454	94
2SC1454-0	385
2SC1456	124
2SC1456(L)	124
2SC1456(M)	124
2SC1456L	124
2SC1456LM	124
2SC1456M	124
2SC1457	194
2SC1463	163A
2SC1464	224
2SC1466	165
2SC1467	165
2SC1469A	283
2SC1472	172A
2SC1472K	172A
2SC1472NC	399
2SC1472R	399
2SC1473	399
2SC1473(Q)	399
2SC1473(R)	399
2SC1473-Q	399
2SC1473-QNC	399
2SC1473-QRNC	399
2SC1473-R	399
2SC1473-RNC	399
2SC1473A	399
2SC1473A(Q)	399
2SC1473A(R)	399
2SC1473A-P	399
2SC1473A-Q	399
2SC1473A-R	399
2SC1473AE	399
2SC1473AH	399
2SC1473AP	399
2SC1473AQ	399
2SC1473AQH	399
2SC1473AR	399
2SC1473NC	399
2SC1473NC(Q)	399
2SC1473NC(R)	399
2SC1473NC-P	399
2SC1473NC-Q	399
2SC1473NC-R	399
2SC1473NCP	399
2SC1473NCQ	399
2SC1473NCQR	399
2SC1473NCR	399
2SC1473NE	399
2SC1473P	399
2SC1473Q	399
2SC1473QNC	399
2SC1473QR	399
2SC1473QRNC	399
2SC1473R	399
2SC1473RNC	399
2SC1474	293
2SC1474-3	293
2SC1474-4	293
2SC1474J	293
2SC1474S	293
2SC1475	315
2SC1475-1	315
2SC1475-3	315
2SC1475-4	315
2SC1475A	315
2SC1475D	315
2SC1475K	315
2SC1477	283
2SC1478	229
2SC1478A	229
2SC1479	278
2SC1482	399
2SC1485	287
2SC1491	325
2SC1493	287
2SC1493NC	399
2SC1494	320
2SC1495-YX	295
2SC1501	157
2SC1501Q	157
2SC1501R	157
2SC1505	198
2SC1505(1)	198
2SC1505(I)	198
2SC1505(K)	198
2SC1505H	198
2SC1505I	198
2SC1505K	198
2SC1505L	198
2SC1505LA	198
2SC1505M	198
2SC1506	198
2SC1506K	198
2SC1506L	198
2SC1506M	198
2SC1507	198
2SC1507-0	198
2SC1507-O	198

PART NUMBER	NTE REPLACEMENT
2SC1507-Y	198
2SC1507A	198
2SC1507H	198
2SC1507J	198
2SC1507K	198
2SC1507K,L,M	198
2SC1507L	198
2SC1507LM	198
2SC1507M	198
2SC1507Y	198
2SC1509	376
2SC1509P	297
2SC1509Q	297
2SC1509R	297
2SC1509S	297
2SC1510	157
2SC1513	194
2SC1514	376
2SC1514-05	376
2SC1514-14	376
2SC1514-15	376
2SC1514B	376
2SC1514BK	376
2SC1514BVC	376
2SC1514CS	376
2SC1514CVC	376
2SC1514E	376
2SC1514V	376
2SC1514VC	376
2SC1515	287
2SC1515AX	287
2SC1515C	287
2SC1515K	287
2SC1517	199
2SC1517B	199
2SC1518	293
2SC1519	198
2SC1520	198
2SC1520-0	198
2SC1520-1	198
2SC1520-1A	198
2SC1520-3A	198
2SC1520I	198
2SC1520K	198
2SC1520K-1	198
2SC1520KL	198
2SC1520L	198
2SC1520L-1	198
2SC1520M	198
2SC1520M-1	198
2SC1521	198
2SC1521K	198
2SC1521L	198
2SC1521LM	198
2SC1522	376
2SC1537	123AP
2SC1537(S)	123AP
2SC1537-0	123AP
2SC1537-O	123AP
2SC1537B	123AP
2SC1537S	123AP
2SC1538	199
2SC1538A	199
2SC1538S	199
2SC1538S(A)	199
2SC1538SA	199
2SC1539	123AP
2SC1540	123AP
2SC1541	289
2SC1542	123AP
2SC1543	229
2SC1544	123AP
2SC1546	154
2SC1547	316
2SC1550	157
2SC1550-1	157
2SC1553	161
2SC1553A	194
2SC1556	195A
2SC1565	373
2SC1565P	373
2SC1565Q	373
2SC1565R	373
2SC1566	157
2SC1567	373
2SC1567A	373
2SC1567AP	373
2SC1567AQ	373
2SC1567AR	373
2SC1567AS	373
2SC1567P	373
2SC1567Q	373
2SC1567R	373
2SC1567S	373
2SC1568	184
2SC1568(R)	184
2SC1568-R	184
2SC1568-S	184
2SC1568R	184
2SC1568S	184
2SC1569	376
2SC1569(FA-5	376
2SC1569(FA-5)	376
2SC1569(K)	376
2SC1569-FA3	376
2SC1569-FA4	376
2SC1569-O	376
2SC1569-R	376
2SC1569-Y	376
2SC1569/FA-1	376
2SC1569/FA-3	376
2SC1569/FA-5	376
2SC1569BK	376
2SC1569FA5	376
2SC1569FA-5	376
2SC1569K	376
2SC1569L	376
2SC1569LB	376
2SC1569LBO	376
2SC1569LBQ	376
2SC1569LBR	376
2SC1569LBY	376
2SC1569O	376
2SC1569Q	376
2SC1569R	376
2SC1569RY	376
2SC1569Y	376
2SC1570	293
2SC1570F	123AP
2SC1570LH	123AP
2SC1571	293
2SC1571F	199
2SC1571G	199
2SC1571H	199
2SC1571L	293
2SC1571LF	293
2SC1573	399
2SC1573(P)	399
2SC1573(TO126)	157
2SC1573-0	157
2SC1573-O	399
2SC1573A	399
2SC1573A(R)	399
2SC1573AH	399
2SC1573AQ	399
2SC1573AQR	399
2SC1573AR	399
2SC1573B	399
2SC1573B(R)	399
2SC1573BR	399
2SC1573NC	399
2SC1573NC-Q	399
2SC1573NC-R	399
2SC1573P	399
2SC1573P(TO126)	157
2SC1573PQ	287
2SC1573PQ(TO126)	157
2SC1573Q	399
2SC1573Q(TO126)	157
2SC1573QNC	399
2SC1573QR	399
2SC1573R	399
2SC1576	283
2SC1577	386
2SC1577A	283
2SC1578	386
2SC1579	283
2SC1580	283
2SC1581	318
2SC1582	318
2SC1583	42
2SC1583G	42
2SC1584	284
2SC1585	388
2SC1585F	107
2SC1585F,H	107
2SC1585H	107
2SC1586	388
2SC1588	278
2SC1589	299
2SC1596	123AP
2SC1601	229
2SC1606	186
2SC1607	233
2SC1608	224
2SC1610	328
2SC1617	283
2SC1618	130
2SC1618B	130
2SC1619	130
2SC1619A	328
2SC1621	108
2SC1621-0	297
2SC1622	161
2SC1623	2408
2SC1623(L6)	2408
2SC1623L51E	2408
2SC1624	291
2SC1624-0	291
2SC1624-O	291
2SC1624-Y	291
2SC1624T	291
2SC1624Y	291
2SC1625	291
2SC1625-0	291
2SC1625-LBGL1	291
2SC1625-O	291
2SC1625Y	291
2SC1625YLBG-L1	291
2SC1625YLBGL	291
2SC1625YLBGL1	291
2SC1626Y	375
2SC1627	289A
2SC1627-0	289A
2SC1627-O	289A
2SC1627-Y	289A
2SC1627-YFA	289A
2SC1627A	289A
2SC1627AO	289A
2SC1627AY	289A
2SC1627O	289A
2SC1627Y	289A
2SC1628	191
2SC1629A(R)	181
2SC1630	154
2SC1631	293
2SC1632	199
2SC1632-5	85
2SC1632-6	85
2SC1632-7	85
2SC1633	199
2SC1633-5	85
2SC1633-6	85
2SC1633-7	85
2SC1633K	199
2SC1633P	199
2SC1634	123AP
2SC1634-5	85
2SC1634-6	85
2SC1634-7	85
2SC1634-8	85
2SC1635	224
2SC1636	289
2SC1637	123AP
2SC1639	123AP
2SC1641	123AP
2SC1641Q	123AP
2SC1641R	123AP
2SC1645	172A
2SC1647	199
2SC1647Q	199
2SC1647RY	199
2SC1648	199
2SC1648E	199
2SC1648S	199
2SC1648SH	199
2SC1652	18
2SC1652-Q	18
2SC1652Q	18
2SC1652R	18
2SC1652RQ	18
2SC1652S	18
2SC1653	194
2SC1654	194
2SC1658C	16
2SC1658Q	194
2SC1663	190
2SC1663H	188
2SC1664	57
2SC1664A	57
2SC1664O	274
2SC1664Q	175
2SC1664R	274
2SC1667	284
2SC1668	320
2SC1669	375
2SC1670	382
2SC1670E	382
2SC1670H	382
2SC1670HA	382
2SC1670HM	382
2SC1670J	382
2SC1670JA	382
2SC1670JC	382
2SC1670JD	382
2SC1670JE	382
2SC1670JW	382
2SC1670K	382
2SC1670MC	382
2SC1670MD	287
2SC1670MJ	287
2SC1674	107
2SC1674K	107
2SC1674L	107
2SC1674M	107
2SC1675	107
2SC1675(L)	85
2SC1675-K	85
2SC1675K	85
2SC1675L	85
2SC1675M	85
2SC1676	320
2SC1678	235
2SC1678E	235
2SC1679	235
2SC1681	47
2SC1681-GR	199
2SC1681BL	199
2SC1681G	199
2SC1681GR	199
2SC1681V	199
2SC1682	199
2SC1682-BL	192
2SC1682-GR	192
2SC1682V	192
2SC1683	375
2SC1683(LB)	375
2SC1683-Q	375
2SC1683AP	375
2SC1683AQ	375
2SC1683LB/P	375
2SC1683P	375
2SC1683Q	375
2SC1683Q(LB)	375
2SC1684	289A
2SC1684(Q)	289A
2SC1684(QR)	289A
2SC1684(R)	289A
2SC1684(S)	289A
2SC1684(T)	289A
2SC1684-O	289A
2SC1684-Q	289A
2SC1684-Q.R	289A
2SC1684-R	289A
2SC1684-S	289A
2SC1684A	289A
2SC1684AQ	289A
2SC1684AR	289A
2SC1684AS	289A
2SC1684BL	289A
2SC1684C	289A
2SC1684H	289A
2SC1684HE	289A
2SC1684P	289A
2SC1684Q	289A
2SC1684Q.R	289A
2SC1684QR	289A
2SC1684QRS	289A
2SC1684R	289A
2SC1684RST	289A
2SC1684S	289A
2SC1684T	289A
2SC1685	85
2SC1685(C)	85
2SC1685(Q)	85
2SC1685(R)	85
2SC1685(S)	85
2SC1685-0	85
2SC1685-CR	85
2SC1685-P	85
2SC1685-PQR	85
2SC1685-Q	85
2SC1685-QR	85
2SC1685-QRS	85
2SC1685-R	85
2SC1685-RS	85
2SC1685-S	85
2SC1685A	85
2SC1685AQ	85
2SC1685AR	85
2SC1685AS	85
2SC1685C	85
2SC1685CR	85
2SC1685CR-Q	85
2SC1685GR	85
2SC1685M	85
2SC1685O	85
2SC1685P	85
2SC1685PQR	85
2SC1685Q	85
2SC1685Q.R	85
2SC1685QL	85
2SC1685QR	85
2SC1685QRS	85
2SC1685R	85
2SC1685RS	85
2SC1685S	85
2SC1685T	85
2SC1685TAQRS	85
2SC1685Y	85
2SC1686	229
2SC1686B	229
2SC1687	229
2SC1688	229
2SC1706H	154
2SC1707AH	194
2SC1707H	161
2SC1708	160
2SC1709	293
2SC1715-BL	85
2SC1717	224
2SC1719	194
2SC1720	194
2SC1721	297
2SC1722	376
2SC1722BK	376
2SC1722BKS	376
2SC1722S	376
2SC1723	376
2SC1723-02	376
2SC1723A	376
2SC1724	224
2SC1728	302
2SC1728-3	302
2SC1728D	302
2SC1728H	302
2SC1730	107
2SC1730K	107
2SC1730L	107
2SC1734	123AP
2SC1734H	194
2SC1735	85
2SC1735C	289A
2SC1735C(BCE)	289A
2SC1739	123AP
2SC1740	85
2SC1740(Q)	85
2SC1740(Q)-L	85
2SC1740(Q)-Y	85
2SC1740(Q)Y	85
2SC1740(R)	85
2SC1740(R)-L	85
2SC1740(R)-Y	85
2SC1740(R)Y	85
2SC1740(S)	85
2SC1740-L	85
2SC1740-Q	85
2SC1740-R	85
2SC1740-S	85
2SC1740C	85
2SC1740D	85
2SC1740E	85
2SC1740L	85
2SC1740LN	85
2SC1740LN-R	85
2SC1740LNE	85
2SC1740LNP	85
2SC1740LNS	85
2SC1740P	85
2SC1740Q	85
2SC1740Q-L	85
2SC1740Q,R	85
2SC1740QH	85
2SC1740QJ	85
2SC1740QP	85
2SC1740QQ	85
2SC1740QR	85
2SC1740QU	85
2SC1740QV	85
2SC1740QW	85
2SC1740QY	85
2SC1740QZ	85
2SC1740R	85
2SC1740R-L	85
2SC1740RE	85
2SC1740RH	85
2SC1740RL	85
2SC1740RM	85
2SC1740RN	85
2SC1740RQ	85
2SC1740RR	85
2SC1740RS	85
2SC1740RS(RS)	85
2SC1740RS-TB	85
2SC1740RV	85
2SC1740RY	85
2SC1740RZ	85
2SC1740S	85
2SC1740S(Q)	85
2SC1740S(Q)Y	85
2SC1740S(QR)-T	85
2SC1740S(R)	85
2SC1740S(R)Y	85
2SC1740S(S35)	85
2SC1740S(S)	85
2SC1740S-E	85
2SC1740S-Q	85
2SC1740S-QF	85
2SC1740S-R	85
2SC1740S-RS	85
2SC1740S-S	85
2SC1740SE	85
2SC1740SER	85
2SC1740SES	85
2SC1740SEY	85
2SC1740SQ	85
2SC1740SQA	85
2SC1740SQR	85
2SC1740SQT	85
2SC1740SQY	85
2SC1740SR	85
2SC1740SRC	85
2SC1740SRJ	85
2SC1740SRK	85
2SC1740SRP	85
2SC1740SRQ	85
2SC1740SRR	85
2SC1740SRS	85
2SC1740SRT	85
2SC1740SRY	85
2SC1740SS	85
2SC1740SSJ	85
2SC1740SSN	85
2SC1740SST	85
2SC1740SSU	85
2SC1740SSX	85
2SC1740ST-93	85
2SC1740XTPQR	85
2SC1740XTPQS	85
2SC1740XTPR	85
2SC1740Y	85
2SC1741	85
2SC1741AP	85
2SC1741AQ	85
2SC1741P	85
2SC1741Q	85
2SC1741QR	85
2SC1741R	289A
2SC1741S	85
2SC1741SQ	85
2SC1741SR	85
2SC1746A	123AP
2SC1748	396
2SC1748Q	396
2SC1748R	396
2SC1749	376
2SC1749B	376
2SC1749C	376
2SC1749D	376
2SC1749E	376
2SC1749XD	376
2SC1755	376
2SC1755A	376
2SC1755C	376
2SC1756	376
2SC1756-0	376
2SC1756-F	376
2SC1756A	376
2SC1756B	376
2SC1756C	376
2SC1756C,D,E	376
2SC1756D	376
2SC1756E	376
2SC1756HP	376
2SC1756K	376
2SC1756KE	376
2SC1756M	376
2SC1756MC	376
2SC1756N	376
2SC1757	376
2SC1760	306
2SC1760-2	306
2SC1760-3	306
2SC1760-14	306
2SC1760H	306
2SC1761	306
2SC1761KJ	306
2SC1765	224
2SC1766	85
2SC1766B	85
2SC1766C	85
2SC1766D	85
2SC1770	123AP
2SC1771	123A
2SC1773	123A
2SC1774	123A
2SC1775	90
2SC1775E	123AP
2SC1775F	123AP
2SC1776	123AP
2SC1777	130
2SC1778	108
2SC1779	313
2SC1780	128
2SC1781	123A
2SC1781H	194
2SC1782	328
2SC1783	284
2SC1784	284
2SC1785	283
2SC1786	283
2SC1787	199
2SC1788	289A
2SC1788P	289A
2SC1788Q	289
2SC1788R	289A
2SC1788R2	289A
2SC1788R3	289A
2SC1789	108
2SC1790	313
2SC1790JD	190
2SC1791	124
2SC1801	316
2SC1802	229
2SC1811	194
2SC1811-1	194
2SC1811-2	194
2SC1811KC	194
2SC1813	123A
2SC1815	85
2SC1815(0)	85
2SC1815(G)	85
2SC1815(GR)	85
2SC1815(GR)-Y	85
2SC1815(GR)L	85
2SC1815(GR)Y	85
2SC1815(Y)	85
2SC1815(Y)L	85
2SC1815(Y)Y	85
2SC1815-0	85
2SC1815-BL	85
2SC1815-FA	85
2SC1815-GR	85
2SC1815-GRFA	85
2SC1815-O	85
2SC1815-OFA	85
2SC1815-Y	85
2SC1815-YFA	85
2SC1815BE	85
2SC1815BL	85
2SC1815FA	85
2SC1815G	85
2SC1815GCC	85
2SC1815GR	85
2SC1815GR-Y	85
2SC1815GRY	85
2SC1815L	85
2SC1815N(GR)	85
2SC1815N-Y	85
2SC1815NEW-0	85
2SC1815NEW-BL	85
2SC1815NEW-GR	85
2SC1815NEW-Y	85
2SC1815O	85
2SC1815R	85
2SC1815TPE2	293
2SC1815Y	85
2SC1815YFA	85
2SC1815YW	85
2SC1815YY	85
2SC1816	236
2SC1816-3	236
2SC1816HL	295
2SC1816Y	85
2SC1817	236
2SC1818	328
2SC1819	376
2SC1819L	376
2SC1819M	376
2SC1819ML	376
2SC1819MR	376
2SC1819R	376
2SC1819RL	376
2SC1820	154
2SC1826	196
2SC1826-0	196
2SC1826-Y	196
2SC1826D	196
2SC1826G	196
2SC1826O	196
2SC1826P	196
2SC1826Q	196
2SC1826R	196
2SC1826Y	196
2SC1827	291
2SC1827Q	291
2SC1827Y	291
2SC1828	369
2SC1828R	369
2SC1829FA-1	94
2SC1830	284
2SC1831	182
2SC1833	85
2SC1834	85
2SC1840	199
2SC1841	90
2SC1841E	90
2SC1841FE	90
2SC1841P	90
2SC1844	199
2SC1844E	199
2SC1844F	199
2SC1845	90
2SC1845E	90
2SC1845EF	90
2SC1845Q	325
2SC1845R	235
2SC1845S	325
2SC1846	295
2SC1846-R	295
2SC1846-S	295
2SC1846B	295
2SC1846P	295
2SC1846Q	295
2SC1846Q/R/S	295
2SC1846QRS	295
2SC1846R	295
2SC1846RS	295
2SC1846RSLB	295
2SC1846RSRL	295
2SC1846S	295
2SC1847	373
2SC1847(Q)	373
2SC1847(R)	373
2SC1847-0	373
2SC1847-O	373
2SC1847A	373
2SC1847B	373
2SC1847C	373
2SC1847D	373
2SC1847E	373
2SC1847F	373
2SC1847G	373
2SC1847GN	373
2SC1847LG	373
2SC1847P	373
2SC1847Q	373
2SC1847QBF	373
2SC1847QR	373
2SC1847R	373
2SC1847V	373
2SC1847VQ	373
2SC1847VR	373
2SC1847X	373
2SC1847Y	373
2SC1848	186A
2SC1848Q	186A
2SC1848R	186A
2SC1848V	186A
2SC1849	123AP
2SC1850	85
2SC1851	128
2SC1852	108
2SC1853	85
2SC1853B	85
2SC1853C	85
2SC1854	85
2SC1854C	85
2SC1854R	85
2SC1854S	85
2SC1855	229
2SC1856	108
2SC1857	123AP
2SC1859	224
2SC1865	379
2SC1866	328
2SC1868	238
2SC1869	328
2SC1870	162
2SC1875	389
2SC1875K	389
2SC1875L	165
2SC1885	399
2SC1885NC	399
2SC1885R	399
2SC1886	316
2SC1887	316
2SC1888	224
2SC1890	90
2SC1890A	90
2SC1890A(D)	90
2SC1890A-D	90
2SC1890A-E	90
2SC1890A-EV	90
2SC1890A-F	90
2SC1890AD	90
2SC1890AE	90
2SC1890AEF	90
2SC1890AF	90
2SC1890AL	90
2SC1890C	90
2SC1890D	90
2SC1890E	90
2SC1890F	90
2SC1890P	90
2SC1891	165
2SC1892	389
2SC1893	389
2SC1894	238
2SC1894K	238
2SC1895	238
2SC1896	238
2SC1897	128
2SC1898	319P
2SC1899	319P
2SC1900	90
2SC1903	373
2SC1904	373

PART NUMBER	NTE REPLACEMENT
2SC1905	198
2SC1905(1)	198
2SC1905(LB)	198
2SC1905H	198
2SC1905H(LB)	198
2SC1905HLB	198
2SC1905LB	198
2SC1906	107
2SC1906-T	107
2SC1907	316
2SC1908	229
2SC1908E	229
2SC1908H	229
2SC1909	235
2SC1909K	235
2SC1909R	235
2SC1913	198
2SC1913A	198
2SC1914A	90
2SC1919C	107
2SC1921	399
2SC1921-03	399
2SC1922	238
2SC1923	107
2SC1923(0)	107
2SC1923(Y)	107
2SC1923-0	229
2SC1923A	229
2SC1923BN	229
2SC1923O	229
2SC1923Y	107
2SC1929	198
2SC1929LB	198
2SC1929Q	198
2SC1929R	198
2SC1940	123AP
2SC1941	399
2SC1941K	399
2SC1941L	399
2SC1941M	399
2SC1942	389
2SC1942-03	389
2SC1942-07	165
2SC1942-10	389
2SC1942-16L	389
2SC1944	236
2SC1945	236
2SC1946	344
2SC1947	488
2SC1951	382
2SC1953	373
2SC1953P	373
2SC1953Q	373
2SC1953R	373
2SC1953S	373
2SC1954	248
2SC1956	224
2SC1957	295
2SC1957K	295
2SC1959	85
2SC1959(Y)	85
2SC1959(Y)-T	85
2SC1959(Y)-Y	85
2SC1959-0	85
2SC1959-O	85
2SC1959-Y	85
2SC1959-YFA	85
2SC1959FA	289A
2SC1959GR	85
2SC1959NEW-Y	85
2SC1959O	85
2SC1959Y	85
2SC1959Y-Y	85
2SC1959YFA	289A
2SC1960	85
2SC1962	191
2SC1964	235
2SC1964D	235
2SC1969	236
2SC1969B	236
2SC1969BH	236
2SC1969H	236
2SC1970	342
2SC1971	342
2SC1972	343
2SC1973	293
2SC1974	235
2SC1975	235
2SC1976	340
2SC1978	342
2SC1980	287
2SC1980R	90
2SC1980S	90
2SC1980T	90
2SC1980U	90
2SC1982	190
2SC1983	56
2SC1983(O)	56
2SC1983(Y)	56
2SC1983-O	56
2SC1983-O	56
2SC1983-P	56
2SC1983-R	261
2SC1983-Y	261
2SC1983D	56
2SC1983K	56
2SC1983O	56
2SC1983P	56
2SC1983Q	56
2SC1983R	56
2SC1983Y	56
2SC1984	56
2SC1985	196
2SC1986	331
2SC1986D	331
2SC1989	161
2SC1990	108
2SC1990B	108
2SC1991	123AP
2SC1992	123A
2SC1993	123A
2SC1994	123A
2SC1995	123A
2SC1996	123A
2SC1997	123A
2SC1998	123AP
2SC1999	199
2SC2000	85
2SC2000-K	85
2SC2000-L	85
2SC2000-M	85
2SC2000K	85
2SC2000L	123AP
2SC2000M	85
2SC2001	85
2SC2001(L)	85
2SC2001-K	85
2SC2001-L	85
2SC2001-M	85
2SC2001F	85
2SC2001G	85
2SC2001K	85
2SC2001L	85
2SC2001L1	293
2SC2001LK	85
2SC2001M	293
2SC2002	85
2SC2002(K)	85
2SC2002(L)	85
2SC2002-K	85
2SC2002-L	85
2SC2002-M	85
2SC2002B	85
2SC2002K	85
2SC2002L	85
2SC2002M	85
2SC2003	85
2SC2003-K	85
2SC2003-L	85
2SC2003-M	85
2SC2003K	85
2SC2003L	85
2SC2003M	85
2SC2009	229
2SC2012	107
2SC2014	363
2SC2017	163A
2SC2018	163A
2SC2020	235
2SC2021	85
2SC2021E	85
2SC2021L	123AP
2SC2021LN	16
2SC2021LNE	16
2SC2021LNP	16
2SC2021LNS	16
2SC2021M	16
2SC2021M(Q)	16
2SC2021M(R)	16
2SC2021M(S)	16
2SC2021M-QRS	16
2SC2021MLN	16
2SC2021MLN-E	16
2SC2021MLN-P	16
2SC2021MLN-S	16
2SC2021MLNE	16
2SC2021MLNP	16
2SC2021MLNS	16
2SC2021MQ	16
2SC2021MQRS	16
2SC2021MR	16
2SC2021MS	16
2SC2021P	16
2SC2021Q	16
2SC2021R	16
2SC2021RG	85
2SC2021RJ	85
2SC2021RL	16
2SC2021RM	16
2SC2021RS	16
2SC2021S	85
2SC2021ST	16
2SC2021Y	123AP
2SC2023	394
2SC2024	295
2SC2025	233
2SC2026	10
2SC2027	238
2SC2028	295
2SC2028-2	373
2SC2028-B/20	373
2SC2028-B/B/20	373
2SC2028/1	373
2SC2028/2	373
2SC2028A	373
2SC2028A/20	373
2SC2028B	373
2SC2028B20	293
2SC2028B/20	373
2SC2029	235
2SC2029-1	235
2SC2029-3	235
2SC2029/3	235
2SC2029B	235
2SC2029B10	235
2SC2029B/10	235
2SC2029C	235
2SC2035	195A
2SC2036	373
2SC2037	278
2SC2043	236
2SC2051	85
2SC2055	123AP
2SC2057	319
2SC2057-C	319P
2SC2057C	229
2SC2057C,D	319
2SC2057D	229
2SC2057E	319P
2SC2057F	319P
2SC2058(P)	85
2SC2058PZ	85
2SC2058QZ	85
2SC2058S	85
2SC2058S-P	85
2SC2059K	2408
2SC2059KN	2408
2SC2060	293
2SC2060(Q)	293
2SC2060B	293
2SC2060K	293
2SC2060Q	293
2SC2060QC	293
2SC2060QZ	293
2SC2060R	293
2SC2060RD	293
2SC2063	16001
2SC2063M	16001
2SC2063P	85
2SC2067	287
2SC2068	376
2SC2068(FA-1)	376
2SC2068-GS-1	376
2SC2068-LB	376
2SC2068-S	376
2SC2068B	376
2SC2068BKLB	376
2SC2068FA1	376
2SC2068FA-1	376
2SC2068G	376
2SC2068GS-1	376
2SC2068KLB	376
2SC2068LB	376
2SC2068LBBK	376
2SC2068R	376
2SC2071	157
2SC2073	375
2SC2073-0	375
2SC2073-4	375
2SC2073-AR	375
2SC2073-AR(D)	375
2SC2073-AR(E)	375
2SC2073-B	375
2SC2073-C	375
2SC2073-D	398
2SC2073-E	398
2SC2073-R-D	375
2SC2073-Z	375
2SC2073A	375
2SC2073AD	375
2SC2073AE	375
2SC2073B	375
2SC2073C	375
2SC2073D	375
2SC2073E	375
2SC2073F	375
2SC2073FA-1	375
2SC2073FA-4	375
2SC2073J	375
2SC2073L	375
2SC2073LB	375
2SC2073LBGL	375
2SC2073LBGL2	375
2SC2073R	375
2SC2073RD	375
2SC2073RE	375
2SC2073S0	375
2SC2073SO	375
2SC2073T	375
2SC2073Y	375
2SC2074	322
2SC2074C	322
2SC2074Y	322
2SC2075	235
2SC2076	85
2SC2076(CB)	85
2SC2076B	85
2SC2076B(CB)	85
2SC2076BC	85
2SC2076BC(CB)	85
2SC2076C	85
2SC2076C(CB)	85
2SC2076CB	85
2SC2076CD	85
2SC2076D	85
2SC2076D(CB)	85
2SC2078	235
2SC2079	295
2SC2079E	295
2SC2080	184
2SC2085	376
2SC2085-Q	376
2SC2085P	376
2SC2085PQ	376
2SC2085Q	376
2SC2086	340
2SC2086(BCE)	340
2SC2087	123AP
2SC2091	295
2SC2092	235
2SC2093	236
2SC2094	344
2SC2098	236
2SC2099	318
2SC2100	318
2SC2101	325
2SC2103	320
2SC2107	123AP
2SC2110	128
2SC2111	123A
2SC2120	289A
2SC2120-0	289A
2SC2120-O	289A
2SC2120-Y	289A
2SC2120FA	289A
2SC2120Y	289A
2SC2120YFA	289A
2SC2121	163A
2SC2122	283
2SC2122A	283
2SC2124	62
2SC2126	175
2SC2127	284
2SC2127A	284
2SC2137	238
2SC2138	198
2SC2139	283
2SC2140	162
2SC2141	291
2SC2141-10	291
2SC2141KC	291
2SC2141KD	291
2SC2141LC	291
2SC2141NE	291
2SC2145	195A
2SC2151	283
2SC2153	123AP
2SC2166	236
2SC2167	375
2SC2167-Y	375
2SC2167Y	375
2SC2168	375
2SC2168-0	375
2SC2168-0-N03	375
2SC2168-O	375
2SC2168-0,Y	375
2SC2168-OY	375
2SC2168-Y	375
2SC2168-Y-N03	375
2SC2168O	375
2SC2168Y	375
2SC2180	320
2SC2184	236
2SC2188	16001
2SC2188(BCE)	85
2SC2189	328
2SC2190	165
2SC2191	283
2SC2193	287
2SC2194	188
2SC2196	224
2SC2197	320
2SC2199	328
2SC2206	15
2SC2206(B)	15
2SC2206(BCE)	85
2SC2206(C)	15
2SC2206(D)	15
2SC2206(R)	15
2SC2206(S)	15
2SC2206-B	85
2SC2206A	85
2SC2206B	15
2SC2206B(BCE)	85
2SC2206C	15
2SC2206C(BCE)	85
2SC2206D	15
2SC2206Q(BCE)	85
2SC2206R(BCE)	85
2SC2206S	15
2SC2207	236
2SC2209	184
2SC2209R	184
2SC2210	229
2SC2212A	108
2SC2213	108
2SC2216	319P
2SC2221	322
2SC2228	399
2SC2228A	399
2SC2228AD	399
2SC2228AE	399
2SC2228C	399
2SC2228D	399
2SC2228E	399
2SC2228F	287
2SC2228K	399
2SC2228K(D)	399
2SC2228K(E)	399
2SC2228KD	399
2SC2228KE	399
2SC2228M	399
2SC2228Y	399
2SC2229	399
2SC2229(0)	399
2SC2229(O)	399
2SC2229(Y)	399
2SC2229-0	399
2SC2229-OY	399
2SC2229-M	399
2SC2229-M(SAN-1)	399
2SC2229-O	399
2SC2229-OY	399
2SC2229-Y	399
2SC2229FA	399
2SC2229M	399
2SC2229O	399
2SC2229Q	399
2SC2229Y	399
2SC2229Y-TYPE6	399
2SC2230	399
2SC2230(GR)	399
2SC2230-A	399
2SC2230-GR	399
2SC2230-Y	399
2SC2230A	399
2SC2230A(G)	399
2SC2230A(Y)	399
2SC2230A-GR	399
2SC2230A-Y	399
2SC2230AG	399
2SC2230AGR	399
2SC2230AGRY	399
2SC2230AGY	399
2SC2230AP	399
2SC2230AY	399
2SC2230AY-GR	399
2SC2230B	399
2SC2230G	399
2SC2230GR	399
2SC2230VGR	399
2SC2230Y	399
2SC2230YGR	399
2SC2231Y	198
2SC2233	51
2SC2233FA-1	375
2SC2233LBGL2	375
2SC2235	382
2SC2236	382
2SC2236(0)	382
2SC2236(D)	382
2SC2236(O)	382
2SC2236(Y)	382
2SC2236-0	382
2SC2236-CY	382
2SC2236-O	382
2SC2236-Y	382
2SC2236D	382
2SC2236O	382
2SC2236Q	382
2SC2236Y	382
2SC2236Y/0	382
2SC2237	344
2SC2240	90
2SC2240BL	90
2SC2240GL	90
2SC2240GR	90
2SC2241	376
2SC2242	376
2SC2242BK	376
2SC2242BKL	376
2SC2243	2319
2SC2244	2319
2SC2245	2319
2SC2246	2319
2SC2256	284
2SC2258	157
2SC2259	40
2SC2259F	40
2SC2259G	40
2SC2259H	40
2SC2260	280
2SC2261	280
2SC2262	280
2SC2264	315
2SC2267H	396
2SC2271	399
2SC2271(D)-AE	399
2SC2271(E)	399
2SC2271(E)-AE	399
2SC2271(M)	399
2SC2271(N)	399
2SC2271-AE	399
2SC2271-D-CTV	399
2SC2271-E-CTV	399
2SC2271-WB	399
2SC2271C	399
2SC2271D	399
2SC2271E	399
2SC2271G	399
2SC2271M	399
2SC2271MN	399
2SC2271N	399
2SC2271O	399
2SC2271Q	399
2SC2271Z	399
2SC2274	289A
2SC2274(E)	289A
2SC2274(F)	289A
2SC2274-D	289A
2SC2274-DE	289A
2SC2274-E	289A
2SC2274-F	289A
2SC2274D	289A
2SC2274E	289A
2SC2274F	289A
2SC2274K	289A
2SC2274KD	289A
2SC2274KE	289A
2SC2274KF	289A
2SC2275A	375
2SC2275P	375
2SC2275Q	375
2SC2277	123AP
2SC2278	171
2SC2290	317
2SC2291	44
2SC2291G	44
2SC2297	196
2SC2298	253
2SC2307	2308
2SC2308	289A
2SC2308B	289A
2SC2308C	289A
2SC2309	199
2SC2309E	199
2SC2309F	199
2SC2309L	199
2SC2310	85
2SC2310B	85
2SC2310C	85
2SC2311	184
2SC2314	295
2SC2317	375
2SC2320	85
2SC2320D	85
2SC2320E	85
2SC2320F	85
2SC2320L	85
2SC2320LE	85
2SC2320LF	85
2SC2320LFG	85
2SC2321	328
2SC2322	328
2SC2323	328
2SC2330-0	399
2SC2330A	399
2SC2330A-GR	399
2SC2330A-Y	399
2SC2330AY	399
2SC2330Y	399
2SC2333	379
2SC2334	54
2SC2334K	379
2SC2334L	54
2SC2335	379
2SC2337	87
2SC2344	375
2SC2344D	375
2SC2344E	375
2SC2350	152
2SC2354	369
2SC2356	53
2SC2362	199
2SC2362-T	199
2SC2362K	199
2SC2362K(F)-AA	199
2SC2362K-T	199
2SC2362KF	199
2SC2363	31
2SC2369	64
2SC2371	157
2SC2371(1)	157
2SC2371(1)K	157
2SC2371(1)LD	157
2SC2371(1)MK	157
2SC2371(8)K	157
2SC2371(8)L	157
2SC2371(8)M	157
2SC2371(K)	157
2SC2371I	157
2SC2371K	157
2SC2371L	157
2SC2371LD	157
2SC2371M	157
2SC2371V	157
2SC2372(L)	379
2SC2373	379
2SC2373K	379
2SC2373L	379
2SC2373M	379
2SC2375	399
2SC2375E	399
2SC2375F	399
2SC2377	15
2SC2377(B)	15
2SC2377(C)	15
2SC2377(D)	15
2SC2377-C	15
2SC2377B	15
2SC2377C	15
2SC2377D	15
2SC2382	320
2SC2383	31
2SC2383(Q)	31
2SC2383(R)	31
2SC2383-0	31
2SC2383-0(SAN)	31
2SC2383-O	31
2SC2383-O(SAN)	31
2SC2383-OSAN	31
2SC2383-R	31
2SC2383-R(SAN)	31
2SC2383-Y	31
2SC2383-Y(C)	31
2SC2383O	31
2SC2383R	31
2SC2383Y	31
2SC2388	163A
2SC2388A	53
2SC2389	90
2SC2390	90
2SC2393D	236
2SC2394D	236
2SC2402	283
2SC2412	2408
2SC2412K	2408
2SC2412K-QR	2408
2SC2412KQ	2408
2SC2412KS	2408
2SC2412KT147	2408
2SC2412Q	2408
2SC2412R	2408
2SC2420	345
2SC2427	379
2SC2428	284
2SC2429	53
2SC2430	328
2SC2431	284
2SC2432	130
2SC2433	198
2SC2434	198
2SC2435	130
2SC2436	130
2SC2441	373
2SC2441D	373
2SC2441E	373
2SC2441F	373
2SC2443-24	188
2SC2456	157
2SC2456(LB-SAN-1)	157
2SC2456LB	157
2SC2456Z	157
2SC2458	85
2SC2458(GR)	85
2SC2458-0	85
2SC2458-GR	85
2SC2458-Y	85
2SC2458BL	85
2SC2458G	85
2SC2458GR	85
2SC2458GR,Y	85
2SC2458L	85
2SC2458O	85
2SC2458Y	85
2SC2459	26
2SC2459-BL	26
2SC2459-GR	26
2SC2459BL	26
2SC2459GR	26
2SC2460	280
2SC2461	284
2SC2462	2408
2SC2462(LD)	2408
2SC2462B	2408
2SC2462C	2408
2SC2472A	399
2SC2481	373
2SC2481-0	373
2SC2481-0LBGL1	373
2SC2481-0	373
2SC2481-R	373
2SC2481-Y	373
2SC2481R	373
2SC2481RLBGL1	373
2SC2481Y	373
2SC2482	399
2SC2482(C1)-T	399
2SC2482(C)	399
2SC2482(FA-1)	399
2SC2482-1	399
2SC2482,FA-1	399
2SC2482A	399
2SC2482BK	399
2SC2482FA1	399
2SC2482FA-1	399
2SC2482K	399
2SC2482V	399
2SC2482Z	399
2SC2483	186A
2SC2483(Y)	186A
2SC2483-0	186A
2SC2483-O	186A
2SC2483-R	186A
2SC2483-Y	186A
2SC2483O	186A
2SC2483Q	186A
2SC2483R	186A
2SC2483Y	186A
2SC2484	36
2SC2484P	390
2SC2485	36
2SC2486	36
2SC2491	54
2SC2497	373
2SC2497Q	290A
2SC2497R	373
2SC2498	23
2SC2500C	293
2SC2502	379
2SC2511	289A
2SC2511A	289A
2SC2511B	289A
2SC2511C	289A
2SC2511D	289A
2SC2512	229
2SC2516	54
2SC2525	92
2SC2525-B	92
2SC2525-G	92
2SC2525B	92
2SC2525G	92
2SC2526	33
2SC2528	54
2SC2535	379
2SC2536	2308
2SC2537	2308
2SC2540	477
2SC2542	379
2SC2551	399
2SC2551-0	399
2SC2551-O	399
2SC2551Q	399
2SC2551R	399
2SC2551R0	399
2SC2555	2308
2SC2556	373
2SC2556A	373

PART NUMBER	NTE REPLACEMENT
2SC2558K	184
2SC2558L	184
2SC2558M	184
2SC2563	390
2SC2564	33
2SC2564O	33
2SC2564R	33
2SC2564Y	33
2SC2565	33
2SC2565O	92
2SC2565R	33
2SC2565Y	33
2SC2568	157
2SC2568(1)	157
2SC2568(1)(K)	157
2SC2568(1)(L)	157
2SC2568(1)(M)	157
2SC2568(1)-K	157
2SC2568(1)-L	157
2SC2568(1)-M	157
2SC2568(1)K	157
2SC2568(1)KD	157
2SC2568(1)L	157
2SC2568(1)LD	157
2SC2568(1)M	157
2SC2568(K)	157
2SC2568(L)	157
2SC2568(M)	157
2SC2568*1*(K)	157
2SC2568*1*(L)	157
2SC2568*1*(M)	157
2SC2568-1	157
2SC2568-1-K	157
2SC2568-1-L	157
2SC2568-1-M	157
2SC2568-1M	157
2SC2568-IK	157
2SC2568-IL	157
2SC2568C	184
2SC2568D	157
2SC2568K	157
2SC2568KD	157
2SC2568L	157
2SC2568LD	157
2SC2568M	157
2SC2570	107
2SC2570A	10
2SC2570AE	10
2SC2575(BCE)	85
2SC2575D(BCE)	85
2SC2575E(BCE)	85
2SC2575F(BCE)	85
2SC2575L(BCE)	85
2SC2575LE(BCE)	85
2SC2575LF(BCE)	85
2SC2577	36
2SC2578	36
2SC2579	36
2SC2580	36
2SC2581	36
2SC2587	33
2SC2588	33
2SC2590	373
2SC2590-P	373
2SC2590-Q	373
2SC2590-R	373
2SC2590-S	373
2SC2590P	373
2SC2590Q	373
2SC2590R	373
2SC2590S	373
2SC2592	375
2SC2592R	375
2SC2594	184
2SC2594V	184
2SC2603	289A
2SC2603(E)	289A
2SC2603(F)	289A
2SC2603(G)	289A
2SC2603-D	289A
2SC2603-E	289A
2SC2603-F	289A
2SC2603-G	289A
2SC2603D	289A
2SC2603E	289A
2SC2603F	289A
2SC2603G	289A
2SC2603R	289A
2SC2603S	289A
2SC2606	171
2SC2607	388
2SC2610	399
2SC2610(BK)	399
2SC2610(Y)	399
2SC2610-05	399
2SC2610-5	399
2SC2610BK	399
2SC2610BR	399
2SC2610K	399
2SC2610KK	399
2SC2610V	399
2SC2610Y	399
2SC2611	157
2SC2611-06	157
2SC2611-5	157
2SC2611V	157
2SC2612	379
2SC2613	379
2SC2618	2406
2SC2621	157
2SC2621(C)	157
2SC2621(D)	157
2SC2621(D)-RAC	157
2SC2621(E)	157
2SC2621(E)-RAC	157
2SC2621-C	157
2SC2621-C-RA	157
2SC2621-D	157
2SC2621-D-RA	157
2SC2621-E	157
2SC2621-E-RA	157
2SC2621-RA	157
2SC2621-RAC	157
2SC2621-RAD	157
2SC2621-RAE	157
2SC2621C	157
2SC2621D	157
2SC2621E	157
2SC2621RA	157
2SC2621RA(C)	157
2SC2621RA(D)	157
2SC2621RA(E)	157
2SC2624	2308
2SC2625	2308
2SC2630	477
2SC2630F	289A
2SC2631	399
2SC2632	399
2SC2633	376
2SC2634	199
2SC2634-R	199
2SC2634-RS	199
2SC2634-S	199
2SC2634R	199
2SC2634RS	199
2SC2634S	199
2SC2636	107
2SC2636R	107
2SC2637	376
2SC2637L	376
2SC2637R	376
2SC2637RL	376
2SC2637Z	376
2SC2647C	85
2SC2653	198
2SC2653(H)	198
2SC2653(H)CL	198
2SC2653B	198
2SC2653C	198
2SC2653CL	198
2SC2653H	198
2SC2653H(C)	198
2SC2653H(L)	198
2SC2653H(LB)	171
2SC2653H-CL	198
2SC2653HCL	198
2SC2653HLB	198
2SC2653L	198
2SC2653LB	198
2SC2653Q	198
2SC2655	293
2SC2655(Y)	293
2SC2655(Y)-T	293
2SC2655(Y)-Y	293
2SC2655-0	293
2SC2655-Y	293
2SC2655-Y(C)	293
2SC2655Y	293
2SC2655Y-Y	293
2SC2655YTPE6	293
2SC2656	2308
2SC2665	390
2SC2668	229
2SC2669	289A
2SC2669-0	289A
2SC2669-R	289A
2SC2669-Y	289A
2SC2670	289A
2SC2670-0	289A
2SC2670-Y	289A
2SC2671	10
2SC2671H	10
2SC2673-Q	20
2SC2673R	293
2SC2681	36
2SC2686(K)	157
2SC2687	399
2SC2688	157
2SC2688(L)	157
2SC2688-K	157
2SC2688-L	157
2SC2688-LK	157
2SC2688-M	157
2SC2688-N	157
2SC2688,L	157
2SC2688A	157
2SC2688K	157
2SC2688KA	157
2SC2688L	157
2SC2688LA	157
2SC2688M	157
2SC2688MA	157
2SC2688N	157
2SC2690A	373
2SC2690A-Q	373
2SC2704	373
2SC2705	31
2SC2706	36
2SC2710	289A
2SC2710-0	289A
2SC2710-Y	289A
2SC2712	2408
2SC2712-YG	2408
2SC2717	229
2SC2717FA	229
2SC2719	289A
2SC2719L	289A
2SC2722	33
2SC2724	289A
2SC2724-C	289A
2SC2724-CD	289A
2SC2724-D	289A
2SC2724-E	289A
2SC2724B	289A
2SC2724C	289A
2SC2724D	289A
2SC2724E	289A
2SC2724T	289A
2SC2734	2402
2SC2735	2402
2SC2735J-L	2402
2SC2736	2402
2SC2738	51
2SC2740	2308
2SC2749	2308
2SC2752	2327
2SC2752K	2327
2SC2752L	2327
2SC2752M	2327
2SC2766	92
2SC2767	379
2SC2768	379
2SC2769	2308
2SC2771M	399
2SC2773	92
2SC2774	58
2SC2774YG	58
2SC2785	2361
2SC2785(H)	2361
2SC2785(H)-Y	2361
2SC2785(J)	2361
2SC2785(J)-Y	2361
2SC2785(JH)-T	2361
2SC2785-E	85
2SC2785-EF	2361
2SC2785-F	2361
2SC2785-FF	2361
2SC2785-HF	2361
2SC2785-HFE	2361
2SC2785-JF	2361
2SC2785-K	85
2SC2785-KF	2361
2SC2785C	85
2SC2785E	85
2SC2785EF	2361
2SC2785F	2361
2SC2785FF	2361
2SC2785H	85
2SC2785H-Y	85
2SC2785HF	2361
2SC2785J	2361
2SC2785J-Y	85
2SC2785JF	2361
2SC2785JHFE	85
2SC2785K	85
2SC2785KF	2361
2SC2785R	85
2SC2785TP	85
2SC2785Y	85
2SC2786	107
2SC2786L	85
2SC2786M	85
2SC2788	2308
2SC2789C	157
2SC2792	2309
2SC2794	373
2SC2809	394
2SC2809-O	390
2SC2809Q	390
2SC2809R	390
2SC2809V	390
2SC2810	379
2SC2812-L7-TA	2408
2SC2812-TA	2408
2SC2814	2408
2SC2814-TA	2408
2SC2818	123AP
2SC2824	373
2SC2827	379
2SC2828	2308
2SC2831	2303
2SC2832	2337
2SC2832A	2337
2SC2832K	198
2SC2832L	198
2SC2834-AM	2300
2SC2834A	2300
2SC2834AM	2300
2SC2837	36
2SC2838	33
2SC2839	85
2SC2839-D	85
2SC2839D	85
2SC2839E	85
2SC2839EZ	85
2SC2839F	85
2SC2839FZ	85
2SC2840	107
2SC2840D	107
2SC2857D	399
2SC2857E	399
2SC2878	85
2SC2878(A)	85
2SC2878(B)	85
2SC2878(B)-T	85
2SC2878(B)-Y	85
2SC2878-A	85
2SC2878-Y	85
2SC2878A	85
2SC2878B	85
2SC2878B-Y	85
2SC2884	107
2SC2898	379
2SC2900	394
2SC2901	123AP
2SC2909R	399
2SC2909S	399
2SC2910R	90
2SC2910S	90
2SC2910T	90
2SC2911	373
2SC2911S	373
2SC2914	53
2SC2914Z	53
2SC2920	53
2SC2921	33
2SC2922	33
2SC2923	157
2SC2923-RL	157
2SC2923RL	157
2SC2928	238
2SC2928-01	238
2SC2929	51
2SC2937	2308
2SC2938	2308
2SC2939	2311
2SC2958M	373
2SC2960	2361
2SC2960E	2361
2SC2960F	2361
2SC2960G	2361
2SC2961	2308
2SC2964	53
2SC2965	53
2SC2971	53
2SC2972	53
2SC2979	2325
2SC2987	36
2SC3000	85
2SC3000(D)-AA	85
2SC3000(E)-AA	85
2SC3000-AA	85
2SC3000D	85
2SC3000E	85
2SC3012	36
2SC3025	238
2SC3038	51
2SC3038N	51
2SC3039	379
2SC3040	2308
2SC3041	53
2SC3042	2308
2SC3043	53
2SC3044	52
2SC3044A	52
2SC3045	53
2SC3046	53
2SC3052	2406
2SC3063	157
2SC3063-RL	157
2SC3063RL	157
2SC3080	15
2SC3080M@	15
2SC3083	2309
2SC3084	53
2SC3088	2309
2SC3089	2300
2SC3090	2311
2SC3091	386
2SC3092	386
2SC3093	386
2SC3094	386
2SC3112	199
2SC3112(A)	199
2SC3112(B)	199
2SC3112A	199
2SC3112B	199
2SC3114	289A
2SC3114-R	289A
2SC3114-S	289A
2SC3114-T	289A
2SC3114R	289A
2SC3114S	289A
2SC3114T	289A
2SC3116	373
2SC3116-R	373
2SC3116-S	373
2SC3116-T	373
2SC3116S	373
2SC3116T	373
2SC3117	373
2SC3117-R	373
2SC3117-S	373
2SC3117-T	373
2SC3117R	373
2SC3117S	373
2SC3130	2402
2SC3135	2361
2SC3135S	2361
2SC3135T	2361
2SC3135U	2361
2SC3149	2325
2SC3150	2325
2SC3151	2309
2SC3152	2309
2SC3153	2309
2SC3156	238
2SC3169	2337
2SC3170	379
2SC3170-P	379
2SC3175	379
2SC3179	377
2SC3179G	377
2SC3179Y	377
2SC3181	36
2SC3182N	36
2SC3182NFA-1	36
2SC3187	287
2SC3187V	287
2SC3198GR	85
2SC3198Y	85
2SC3209	399
2SC3209K	399
2SC3209L	399
2SC3209LK	399
2SC3210	2308
2SC3222	2319
2SC3261	2309
2SC3263	92
2SC3264	92
2SC3271	157
2SC3271(N)	157
2SC3271(N)-L	157
2SC3271(NP)	157
2SC3271(NP)-C1	157
2SC3271(NP)-L	157
2SC3271(P)	157
2SC3271(P)-L	157
2SC3271-L	157
2SC3271-N	157
2SC3271L	157
2SC3271N	157
2SC3271N-L	157
2SC3271P	157
2SC3271P-L	157
2SC3272	157
2SC3280	2328
2SC3280-0	2328
2SC3280-R	2328
2SC3281	2328
2SC3281-0	2328
2SC3281-R	2328
2SC3292	2332
2SC3293	2332
2SC3294	2332
2SC3296	375
2SC3299	377
2SC3299(Y)	377
2SC3299Y	377
2SC3300	2304
2SC3300ALF	2304
2SC3306	2308
2SC3309	2337
2SC3310	2337
2SC3311(Q)	2361
2SC3311(R)	2361
2SC3311A	2361
2SC3311A(Q)	2361
2SC3311A(Q)Y	2361
2SC3311A(R)	2361
2SC3311A(R)Y	2361
2SC3311A-QRS	2361
2SC3311A-RTA	2361
2SC3311AQ	2361
2SC3311AR	2361
2SC3311ARS	2361
2SC3311Q	2361
2SC3311S	2361
2SC3317	51
2SC3317-S	51
2SC3317S	51
2SC3321	2319
2SC3330	2361
2SC3330S	2361
2SC3330T	2361
2SC3330U	2361
2SC3331	293
2SC3331ST	293
2SC3331T	293
2SC3333	399
2SC3334	399
2SC3353	2337
2SC3353A	2337
2SC3384	2319
2SC3385	2319
2SC3387	2301
2SC3387-01AB	2301
2SC3387-SY	2301
2SC3393	2361
2SC3393R	2361
2SC3393S	2361
2SC3393T	2361
2SC3393U	2361
2SC3395	2418
2SC3396	2416
2SC3398	2414
2SC3399	2359
2SC3399(CY)-TA	2416
2SC3399-AC	2359
2SC3400	2357
2SC3400-T	2357
2SC3402	2355
2SC3411	2319
2SC3417	157
2SC3460	2300
2SC3468	399
2SC3468-AE	399
2SC3468D	399
2SC3468E	399
2SC3479	2302
2SC3480	2302
2SC3481	2302
2SC3503-RA	157
2SC3503D	157
2SC3503E	157
2SC3503F	373
2SC3505	2309
2SC3619	157
2SC3620	157
2SC3620(LB-SAN-1)	157
2SC3621	373
2SC3621(0)	373
2SC3621(R)	373
2SC3621-0	373
2SC3621-0(LB-SAN-2)	373
2SC3621-0(SAN-1)	373
2SC3621-O	373
2SC3621-O(LB-SAN-2)	373
2SC3621-OLB-SAN-2	373
2SC3621-R	373
2SC3621-R(LB-SAN-2)	373
2SC3621-R(SAN-1)	373
2SC3621Y	373
2SC3621Y(0)	373
2SC3621Y(R)	373
2SC3636	2324
2SC3642	2324
2SC3643	2324
2SC3673-Q	20
2SC3678	2309
2SC3679	2309
2SC3685	2324
2SC3686	2324
2SC3687	2324
2SC3703Y	382
2SC3708	382
2SC3708-R	382
2SC3708-S	382
2SC3708R	382
2SC3708S	382
2SC3710	123AP
2SC3720	199
2SC3720A	229
2SC3720B	229
2SC3720C	229
2SC3720D	229
2SC3720F	229
2SC3720G	229
2SC3720GN	229
2SC3720H	229
2SC3720J	229
2SC3720K	229
2SC3720L	229
2SC3720OR	229
2SC3720R	229
2SC3720X	229
2SC3720Y	229
2SC3721	199
2SC3721GR	199
2SC3724	123AP
2SC3737	2324
2SC3749	2339
2SC3750	2337
2SC3789	157
2SC3789-C	157
2SC3789-CD	157
2SC3789-D	157
2SC3789-E	157
2SC3789D	157
2SC3789E	157
2SC3796	2324
2SC3796A	2324
2SC3797	2324
2SC3797A	2324
2SC3798	2324
2SC3798A	2324
2SC3799	2324
2SC3799A	2324
2SC3800	229
2SC3800A	229
2SC3800B	229
2SC3800C	229
2SC3800D	229
2SC3800E	229
2SC3800F	229
2SC3800G	229
2SC3800GN	229
2SC3800H	229
2SC3800J	229
2SC3800K	229
2SC3800L	229
2SC3800M	229
2SC3800OR	229
2SC3800R	229
2SC3800X	229
2SC3800Y	229
2SC3813	107
2SC3830	2312
2SC3832	2312
2SC3833	2311
2SC3833LF-128	2311
2SC3854	107
2SC3875	2408
2SC3875S(LO)	2408
2SC3883	2302
2SC3886A	2324
2SC3890	379
2SC3902-R-RA	373
2SC3902S	373
2SC3940	229
2SC3940A	229
2SC3940B	229
2SC3940C	229
2SC3940D	229
2SC3940E	229
2SC3940F	229
2SC3940G	229
2SC3940GN	229
2SC3940H	229
2SC3940J	229
2SC3940K	229
2SC3940L	229
2SC3940M	229
2SC3940OR	229
2SC3940R	229
2SC3940X	229
2SC3940Y	229
2SC3942	376
2SC3972	2337
2SC3972A	2337
2SC3973	2337
2SC3973A	2337
2SC4012A	293
2SC4012B	293
2SC4012C	293
2SC4012D	293
2SC4012E	293
2SC4012F	293
2SC4012G	293
2SC4012GN	293
2SC4012H	293
2SC4012J	293
2SC4012L	293
2SC4012M	293
2SC4012X	293
2SC4012Y	293
2SC4026	2337
2SC4033A	229
2SC4033B	229
2SC4033C	229
2SC4033D	229
2SC4033E	229
2SC4033F	229
2SC4033G	229
2SC4033GN	229
2SC4033H	229
2SC4033J	229
2SC4033K	229
2SC4033L	229
2SC4033M	229
2SC4033OR	229
2SC4033R	229
2SC4033X	229
2SC4033Y	229
2SC4059	2311
2SC4075	376
2SC4075-YAC	376
2SC4075D	376
2SC4075E	376
2SC4108	2311
2SC4108-CTV-YB	2311
2SC4115S	11
2SC4115SQR	11
2SC4116	152
2SC4116A	152
2SC4116B	152
2SC4116C	152
2SC4116D	152
2SC4116E	152
2SC4116F	152
2SC4116G	152
2SC4116GN	152
2SC4116H	152
2SC4116J	152
2SC4116K	152
2SC4116L	152
2SC4116M	152
2SC4116OR	152
2SC4116R	152
2SC4116X	152
2SC4116Y	152
2SC4159	54
2SC4159-E	54
2SC4159D	54
2SC4159E	54
2SC4160	2337
2SC4161	2337
2SC4169	2338
2SC4217	157
2SC4217(D)-RAC	157
2SC4217(E)-RAC	157
2SC4217-RAC	157
2SC4217D	157
2SC4217E	157
2SC4242	2312
2SC4274	379
2SC4274-02F9	379
2SC4299	2324
2SC4300	2324
2SC4301	2324
2SC4302	2324
2SC4303	2324
2SC4303A	2324
2SC4418	2337
2SC4423	2308
2SC4423-CTV	2308
2SC4423-CTV-YB	2308
2SC4435	2324
2SC4437	2324
2SC4438	2324
2SC5094	289
2SC5100	198
2SC5100A	198
2SC5100B	198
2SC5100C	198
2SC5100D	198
2SC5100E	198
2SC5100F	198
2SC5100G	198
2SC5100GN	198
2SC5100H	198
2SC5100J	198
2SC5100K	198
2SC5100L	198
2SC5100M	198
2SC5100OR	198
2SC5100R	198
2SC5100Y	198

PART NUMBER	NTE REPLACEMENT
2SC5110	198
2SC5110A	198
2SC5110B	198
2SC5110C	198
2SC5110D	198
2SC5110E	198
2SC5110F	198
2SC5110G	198
2SC5110GN	198
2SC5110H	198
2SC5110J	198
2SC5110K	198
2SC5110L	198
2SC5110M	198
2SC5110OR	198
2SC5110R	198
2SC5110X	198
2SC5110Y	198
2SC5370	293
2SC5370A	293
2SC5370B	293
2SC5370C	293
2SC5370D	293
2SC5370E	293
2SC5370F	293
2SC5370G	293
2SC5370GN	293
2SC5370H	293
2SC5370J	293
2SC5370K	293
2SC5370L	293
2SC5370M	293
2SC5370OR	293
2SC5370R	293
2SC5370X	293
2SC5370Y	293
2SC5430OR	229
2SC5958	373
2SC7108B	123AP
2SC7111A-E	85
2SC7128D	302
2SC7335-BL	123AP
2SC7354	289A
2SC8146	293
2SC8290	123AP
2SC8380	289A
2SC9011E	123AP
2SC9011F	123AP
2SC9011H	123AP
2SC10148	186
2SC10489	290A
2SC10898	171
2SC10963ZM	186A
2SC10964ZL	186A
2SC11070	186
2SC13838	128
2SC13901	123AP
2SC14070	192
2SC14505	152
2SC15211	198
2SC15685	184
2SC17401	123
2SC18150	85
2SC19230/3772	229
2SC19815GR,Y	85
2SC19830	56
2SC19830,Q,R,Y	56
2SC20011	85
2SC20011K	85
2SC21204	123AP
2SC22280	399
2SC22290	399
2SC22710	399
2SC23711L	157
2SC23711M	157
2SC23830	31
2SC24810	373
2SC24830	290A
2SC25510	399
2SC25681	157
2SC25681K	157
2SC25681L	157
2SC25681LD	157
2SC25681M	157
2SC26550	293
2SC26611	157
2SC27400R	85
2SC27512	2311
2SC33114R	2361
2SC34002	2357
2SC207350	375
2SC-2C	506
2SC-313	161
2SC-923	199
2SC-945	85
2SC-945A	85
2SC-983D	287
2SC-1307	236
2SC-1652	18
2SC-1815	85
2SC-1815Y	85
2SC-1890	90
2SC-1890E	90
2SC-1906	107
2SC-1983	56
2SC-2002	85
2SC-2021	16
2SC-2068	376
2SC-2068LB	376
2SC-2229	399
2SC-2236	382
2SC-22360	382
2SC-2383	31
2SC-2482	399

PART NUMBER	NTE REPLACEMENT
2SC-2610	399
2SC-4012	293
2SC-4033	229
2SC-F6	123AP
2SC-F8	224
2SC-F11	229
2SC-F11A	229
2SC-F11B	229
2SC-F11C	229
2SC-F11D	229
2SC-F11E	229
2SC-F11F	229
2SC-F11G	229
2SC-F11GN	229
2SC-F11H	229
2SC-F11J	229
2SC-F11K	229
2SC-F11L	229
2SC-F11M	229
2SC-F110R	229
2SC-F11R	229
2SC-F11X	229
2SC-F11Y	229
2SC-F14	229
2SC-F14A	229
2SC-F14B	229
2SC-F14C	229
2SC-F14D	229
2SC-F14E	229
2SC-F14F	229
2SC-F14G	229
2SC-F14GN	229
2SC-F14H	229
2SC-F14J	229
2SC-F14K	229
2SC-F14L	229
2SC-F14M	229
2SC-F140R	229
2SC-F14R	229
2SC-F14X	229
2SC-F14Y	229
2SC-NJ-100	199
2SC-NJ-107	128
2SC-NJ100	199
2SC-NJ107	128
2SCA733Q	290A
2SCA940	398
2SCB22	102
2SCC945P	175
2SCD78	152
2SCF1A	229
2SCF1B	229
2SCF1C	229
2SCF1D	229
2SCF1E	229
2SCF1F	229
2SCF1G	229
2SCF1GN	229
2SCF1H	229
2SCF1J	229
2SCF1K	229
2SCF1L	229
2SCF1M	229
2SCF10R	229
2SCF1R	229
2SCF1X	229
2SCF1Y	229
2SCF2	123AP
2SCF2A	229
2SCF2B	229
2SCF2C	229
2SCF2D	229
2SCF2E	229
2SCF2G	229
2SCF2GN	229
2SCF2H	229
2SCF2J	229
2SCF2K	229
2SCF2L	229
2SCF2M	229
2SCF2R	229
2SCF2X	229
2SCF2Y	229
2SCF3	224
2SCF3A	224
2SCF3B	224
2SCF3C	224
2SCF3D	224
2SCF3E	224
2SCF3F	224
2SCF3G	224
2SCF3GN	224
2SCF3H	224
2SCF3J	224
2SCF3K	224
2SCF3L	224
2SCF3M	224
2SCF3OR	224
2SCF3R	224
2SCF3X	224
2SCF3Y	224
2SCF5	123
2SCF5A	123AP
2SCF5B	123AP
2SCF5C	123AP
2SCF5D	123AP
2SCF5E	123AP
2SCF5F	123AP
2SCF5G	123AP
2SCF5GN	123AP
2SCF5H	123AP
2SCF5J	123AP
2SCF5K	123AP
2SCF5L	123AP

PART NUMBER	NTE REPLACEMENT
2SCF5M	123AP
2SCF5OR	123AP
2SCF5R	123AP
2SCF5X	123AP
2SCF5Y	123AP
2SCF6	195A
2SCF6A	128
2SCF6B	128
2SCF6C	128
2SCF6D	128
2SCF6E	128
2SCF6F	128
2SCF6G	128
2SCF6GN	128
2SCF6H	128
2SCF6J	128
2SCF6K	128
2SCF6L	128
2SCF6M	128
2SCF6OR	128
2SCF6R	128
2SCF6X	128
2SCF6Y	128
2SCF8	237
2SCF8A	237
2SCF8B	237
2SCF8C	237
2SCF8D	237
2SCF8E	237
2SCF8F	237
2SCF8G	224
2SCF8GN	237
2SCF8H	237
2SCF8J	237
2SCF8K	237
2SCF8L	237
2SCF8OR	237
2SCF8R	237
2SCF8X	237
2SCF8Y	237
2SCF11	313
2SCF12A	224
2SCF12B	224
2SCF12C	224
2SCF12D	224
2SCF12E	224
2SCF12F	224
2SCF12G	224
2SCF12GN	224
2SCF12H	224
2SCF12J	224
2SCF12K	224
2SCF12L	224
2SCF12M	224
2SCF12OR	224
2SCF12R	224
2SCF12X	224
2SCF12Y	224
2SCF14	233
2SCF812	224
2SCF-2	123AP
2SCF-8	224
2SCI090B	154
2SCM39J	229
2SCM39X	229
2SCM93D	130
2SCM95K	124
2SCM98F	128
2SCNJ100	199
2SCNJ107	128
2SCS183A	293
2SCS183B	293
2SCS183C	293
2SCS183D	293
2SCS183E	123
2SCS183F	293
2SCS183G	293
2SCS183GN	293
2SCS183H	293
2SCS183J	293
2SCS183K	293
2SCS183L	293
2SCS183M	293
2SCS183OR	293
2SCS183R	293
2SCS183Y	293
2SCS184	293
2SCS184A	293
2SCS184B	293
2SCS184C	293
2SCS184D	293
2SCS184E	123
2SCS184F	293
2SCS184G	293
2SCS184GN	293
2SCS184H	293
2SCS184J	108
2SCS184K	293
2SCS184L	293
2SCS184M	293
2SCS184OR	293
2SCS184R	293
2SCS184X	293
2SCS184Y	293
2SCS429	229
2SCS429A	229
2SCS429B	229
2SCS429C	229
2SCS429D	229
2SCS429E	229
2SCS429F	229
2SCS429G	229
2SCS429GN	229
2SCS429H	229

PART NUMBER	NTE REPLACEMENT
2SCS429J	108
2SCS429K	229
2SCS429L	229
2SCS429M	229
2SCS429OR	229
2SCS429R	229
2SCS429X	229
2SCS429Y	229
2SCS430	229
2SCS430A	229
2SCS430B	229
2SCS430C	229
2SCS430D	229
2SCS430E	229
2SCS430F	229
2SCS430GN	229
2SCS430H	108
2SCS430J	229
2SCS430K	229
2SCS430L	229
2SCS430M	229
2SCS430R	229
2SCS430X	229
2SCS430Y	229
2SCS461	229
2SCS461A	229
2SCS461B	229
2SCS461C	229
2SCS461D	229
2SCS461E	229
2SCS461F	108
2SCS461G	229
2SCS461GN	229
2SCS461H	229
2SCS461J	229
2SCS461K	229
2SCS461L	229
2SCS461M	229
2SCS461OR	229
2SCS461R	229
2SCS461X	229
2SCS461Y	229
2SCS469	229
2SCS469A	229
2SCS469B	229
2SCS469C	229
2SCS469D	229
2SCS469E	229
2SCS469F	108
2SCS469G	229
2SCS469GN	229
2SCS469H	229
2SCS469J	229
2SCS469K	229
2SCS469L	229
2SCS469M	229
2SCS469R	229
2SCS469X	229
2SCS469Y	229
2SCU64M	195A
2SD11	103
2SD11A	103A
2SD11B	103A
2SD11C	103A
2SD11D	103A
2SD11E	103A
2SD11F	103A
2SD11G	103A
2SD11GN	103A
2SD11H	103A
2SD11J	103A
2SD11K	103A
2SD11L	103A
2SD11M	103A
2SD11OR	103A
2SD11R	103A
2SD11X	103A
2SD11Y	103A
2SD12	130
2SD12A	162
2SD12B	162
2SD12C	162
2SD12E	162
2SD12F	162
2SD12G	162
2SD12GN	162
2SD12H	162
2SD12J	162
2SD12K	162
2SD12L	162
2SD12M	162
2SD12OR	162
2SD12R	162
2SD12X	162
2SD12Y	162
2SD15	130
2SD15A	181
2SD15B	181
2SD15C	181
2SD15D	181
2SD15E	181
2SD15F	181
2SD15G	181
2SD15GN	181
2SD15H	181
2SD15J	181
2SD15K	181
2SD15L	181
2SD15M	181
2SD15OR	181
2SD15R	181
2SD15X	181
2SD15Y	181
2SD16	130

PART NUMBER	NTE REPLACEMENT
2SD16A	181
2SD16B	181
2SD16C	181
2SD16D	181
2SD16E	181
2SD16F	181
2SD16G	181
2SD16GN	181
2SD16H	181
2SD16J	181
2SD16K	181
2SD16L	181
2SD16M	181
2SD16OR	181
2SD16R	181
2SD16X	181
2SD16Y	181
2SD17	130
2SD17A	181
2SD17C	181
2SD17D	181
2SD17E	181
2SD17F	181
2SD17GN	181
2SD17H	181
2SD17J	181
2SD17K	181
2SD17L	181
2SD17M	181
2SD17R	181
2SD17X	181
2SD17Y	181
2SD18	162
2SD18(RECTIFIER)	116
2SD19	103
2SD19A	103A
2SD19B	103A
2SD19C	103A
2SD19E	103A
2SD19F	103A
2SD19G	103A
2SD19GN	103A
2SD19H	103A
2SD19J	103A
2SD19K	103A
2SD19M	103A
2SD19Y	103A
2SD20	103
2SD20A	103A
2SD20B	103A
2SD20C	103A
2SD20D	103A
2SD20E	103A
2SD20F	103A
2SD20G	103A
2SD20GN	103A
2SD20H	103A
2SD20J	103A
2SD20K	103A
2SD20L	103A
2SD20M	103A
2SD20OR	103A
2SD20R	103A
2SD20X	103A
2SD20Y	103A
2SD21	103
2SD21A	103A
2SD21B	103A
2SD21C	103A
2SD21D	103A
2SD21E	103A
2SD21F	103A
2SD21G	103A
2SD21GN	103A
2SD21H	103A
2SD21J	103A
2SD21K	103A
2SD21L	103A
2SD21M	103A
2SD21OR	103A
2SD21R	103A
2SD21X	103A
2SD21Y	103A
2SD22	103
2SD22A	103A
2SD22B	103A
2SD22C	103A
2SD22D	103A
2SD22E	103A
2SD22F	103A
2SD22G	103A
2SD22GN	103A
2SD22H	103A
2SD22J	103A
2SD22K	103A
2SD22L	103A
2SD22M	103A
2SD22OR	103A
2SD22R	103A
2SD22X	103A
2SD22Y	103A
2SD23	103
2SD23A	103A
2SD23B	103A
2SD23C	103A
2SD23E	103A
2SD23F	103A
2SD23G	103A
2SD23GN	103A
2SD23H	103A
2SD23J	103A
2SD23K	103A
2SD23L	103A
2SD23M	103A

PART NUMBER	NTE REPLACEMENT
2SD230R	103A
2SD23R	103A
2SD23X	103A
2SD23Y	103A
2SD24	124
2SD24(D)	124
2SD24(F)	124
2SD24A	124
2SD24B	124
2SD24C	124
2SD24CK	124
2SD24D	124
2SD24DR	124
2SD24E	124
2SD24F	124
2SD24G	124
2SD24GN	124
2SD24H	124
2SD24J	124
2SD24K	124
2SD24K(C)	124
2SD24K(E)	124
2SD24KC	124
2SD24KD	124
2SD24KE	124
2SD24L	124
2SD24M	124
2SD24OR	124
2SD24R	124
2SD24X	124
2SD24Y	124
2SD24Y(C)	124
2SD24Y(D,E)	124
2SD24Y(E,F)	124
2SD24Y(KC)	124
2SD24Y-K	124
2SD24YB	124
2SD24YC	124
2SD24YD	124
2SD24YE	124
2SD24YF	124
2SD24YK	124
2SD24YKC	124
2SD24YL	124
2SD24YLC	124
2SD24YLD	124
2SD24YLE	124
2SD24YM	124
2SD24YM(C-E)	124
2SD24YMC	124
2SD24YME	124
2SD25	103A
2SD26	130
2SD26A	130
2SD26B	130
2SD26C	130
2SD26D	130
2SD26E	130
2SD26F	130
2SD26G	130
2SD26GN	130
2SD26H	130
2SD26J	130
2SD26K	130
2SD26L	130
2SD26M	130
2SD26OR	130
2SD26R	130
2SD26X	130
2SD26Y	130
2SD27	103A
2SD28	175
2SD28A	152
2SD28B	152
2SD28C	152
2SD28D	152
2SD28E	152
2SD28F	152
2SD28G	152
2SD28GN	152
2SD28H	152
2SD28J	152
2SD28K	152
2SD28L	152
2SD28M	152
2SD28OR	152
2SD28R	152
2SD28X	152
2SD28Y	152
2SD29	175
2SD29A	152
2SD29B	152
2SD29E	152
2SD29F	152
2SD29GN	152
2SD29J	152
2SD29K	152
2SD29L	152
2SD29M	152
2SD29OR	152
2SD29R	152
2SD29X	152
2SD29Y	152
2SD30	103A
2SD30-0	103A
2SD30-0R	103A
2SD30-N	103A
2SD30-O	103A
2SD30-OR	103A
2SD30A	103A
2SD30B	103A
2SD30C	103A
2SD30D	103A
2SD30E	103A

PART NUMBER	NTE REPLACEMENT
2SD30F	103A
2SD30G	103A
2SD30GN	103A
2SD30H	103A
2SD30J	103A
2SD30K	103A
2SD30L	103A
2SD30M	103A
2SD30N	103A
2SD30OR	103A
2SD30P	103A
2SD30R	103A
2SD30X	103A
2SD30Y	103A
2SD31	103A
2SD31B	103A
2SD31C	103A
2SD31D	103A
2SD31E	103A
2SD31F	103A
2SD31G	103A
2SD31GN	103A
2SD31H	103A
2SD31J	103A
2SD31K	103A
2SD31L	103A
2SD31M	103A
2SD31OR	103A
2SD31R	103A
2SD31X	103A
2SD31Y	103A
2SD32	103A
2SD32A	103A
2SD32B	103A
2SD32C	103A
2SD32D	103A
2SD32E	103A
2SD32F	103A
2SD32G	103A
2SD32GN	103A
2SD32H	103A
2SD32J	103A
2SD32K	103A
2SD32L	103A
2SD32M	103A
2SD32OR	103A
2SD32R	103A
2SD32X	103A
2SD32Y	103A
2SD33	103A
2SD33A	161
2SD33B	161
2SD33C	103A
2SD33D	161
2SD33E	161
2SD33F	161
2SD33G	161
2SD33GN	161
2SD33H	161
2SD33J	161
2SD33K	161
2SD33L	161
2SD33OR	161
2SD33X	161
2SD33Y	161
2SD34	103A
2SD34A	103A
2SD34B	103A
2SD34C	103A
2SD34D	103A
2SD34E	103A
2SD34F	103A
2SD34G	103A
2SD34GN	103A
2SD34H	103A
2SD34J	103A
2SD34K	103A
2SD34L	103A
2SD34M	103A
2SD34OR	103A
2SD34R	103A
2SD34X	103A
2SD34Y	103A
2SD35	103A
2SD36	101
2SD36A	103A
2SD36B	103A
2SD36C	103A
2SD36D	103A
2SD36E	103A
2SD36F	103A
2SD36G	103A
2SD36GN	103A
2SD36H	103A
2SD36J	103A
2SD36K	103A
2SD36L	103A
2SD36M	103A
2SD36OR	103A
2SD36R	103A
2SD36X	103A
2SD36Y	103A
2SD37	103A
2SD37A	103A
2SD37B	103A
2SD37C	103A
2SD37D	103A
2SD37E	103A
2SD37F	103A
2SD37G	103A
2SD37GN	103A
2SD37H	103A
2SD37K	103A
2SD37L	103A

PART NUMBER	NTE REPLACEMENT
2SD37M	103A
2SD37OR	103A
2SD37R	103A
2SD37X	103A
2SD37Y	103A
2SD38	103A
2SD38A	103A
2SD38B	103A
2SD38C	103A
2SD38D	103A
2SD38E	103A
2SD38F	103A
2SD38G	103A
2SD38GN	103A
2SD38H	103A
2SD38J	103A
2SD38K	103A
2SD38L	103A
2SD38M	103A
2SD38OR	103A
2SD38R	103A
2SD38X	103A
2SD38Y	103A
2SD41	130
2SD41A	181
2SD41B	181
2SD41C	181
2SD41D	181
2SD41E	181
2SD41F	181
2SD41G	181
2SD41GN	181
2SD41H	181
2SD41J	181
2SD41K	181
2SD41L	181
2SD41M	181
2SD41OR	181
2SD41R	181
2SD41X	181
2SD41Y	181
2SD43	101
2SD43A	101
2SD43B	103A
2SD43C	103A
2SD43D	103A
2SD43E	103A
2SD43F	103A
2SD43G	103A
2SD43GN	103A
2SD43H	103A
2SD43J	103A
2SD43K	103A
2SD43L	103A
2SD43M	103A
2SD43OR	103A
2SD43R	103A
2SD43X	103A
2SD43Y	103A
2SD44	101
2SD44A	103A
2SD44B	103A
2SD44C	103A
2SD44D	103A
2SD44E	103A
2SD44F	103A
2SD44G	103A
2SD44GN	103A
2SD44H	103A
2SD44J	103A
2SD44K	103A
2SD44L	103A
2SD44M	103A
2SD44R	103A
2SD44X	103A
2SD44Y	103A
2SD45	162
2SD46	162
2SD47	162
2SD48	152
2SD49	175
2SD49A	152
2SD49B	152
2SD49C	152
2SD49D	152
2SD49E	152
2SD49F	152
2SD49G	152
2SD49GN	152
2SD49J	152
2SD49K	152
2SD49L	152
2SD49M	152
2SD49OR	152
2SD49R	152
2SD49X	152
2SD49Y	152
2SD50	130
2SD50A	181
2SD50B	181
2SD50C	181
2SD50D	181
2SD50E	181
2SD50F	181
2SD50G	181
2SD50GN	181
2SD50H	181
2SD50J	181
2SD50K	181
2SD50L	181
2SD50M	181
2SD50OR	181
2SD50R	181
2SD50X	181

PART NUMBER	NTE REPLACEMENT
2SD50Y	181
2SD51	130
2SD51A	181
2SD51B	181
2SD51C	181
2SD51D	181
2SD51E	181
2SD51F	181
2SD51G	181
2SD51GN	181
2SD51H	181
2SD51J	181
2SD51K	181
2SD51L	181
2SD51M	181
2SD51OR	181
2SD51R	181
2SD51X	181
2SD51Y	181
2SD52	130
2SD53	130
2SD53A	181
2SD53B	181
2SD53C	181
2SD53E	181
2SD53F	181
2SD53G	181
2SD53GN	181
2SD53H	181
2SD53J	181
2SD53K	181
2SD53L	181
2SD53M	181
2SD53OR	181
2SD53R	181
2SD53X	181
2SD53Y	181
2SD54	182
2SD55	181
2SD55A	181
2SD56	175
2SD56A	152
2SD56B	152
2SD56C	152
2SD56D	152
2SD56E	152
2SD56F	152
2SD56G	152
2SD56GN	152
2SD56H	152
2SD56J	152
2SD56K	152
2SD56L	152
2SD56M	152
2SD56OR	152
2SD56R	152
2SD56X	152
2SD56Y	152
2SD57	175
2SD58	175
2SD59	162
2SD60	162
2SD61	103A
2SD61A	103A
2SD61B	103A
2SD61C	103A
2SD61D	103A
2SD61E	103A
2SD61F	103A
2SD61G	103A
2SD61GN	103A
2SD61H	103A
2SD61J	103A
2SD61K	103A
2SD61L	103A
2SD61M	103A
2SD61OR	103A
2SD61R	103A
2SD61X	103A
2SD61Y	103A
2SD62	103A
2SD62A	103A
2SD62B	103A
2SD62C	103A
2SD62D	103A
2SD62E	103A
2SD62G	103A
2SD62GN	103A
2SD62H	103A
2SD62J	103A
2SD62K	103A
2SD62L	103A
2SD62M	103A
2SD62R	103A
2SD62X	103A
2SD62Y	103A
2SD63	103A
2SD63A	103A
2SD63B	103A
2SD63C	103A
2SD63E	103A
2SD63F	103A
2SD63G	103A
2SD63GN	103A
2SD63H	103A
2SD63J	103A
2SD63K	103A
2SD63L	103A
2SD63M	103A
2SD63OR	103A
2SD63R	103A
2SD63X	103A
2SD63Y	103A
2SD64	103A

PART NUMBER	NTE REPLACEMENT
2SD64A	103A
2SD64B	103A
2SD64C	103A
2SD64D	103A
2SD64E	103A
2SD64F	103A
2SD64G	103A
2SD64GN	103A
2SD64H	103A
2SD64J	103A
2SD64K	103A
2SD64M	103A
2SD64OR	103A
2SD64R	103A
2SD64X	103A
2SD64Y	103A
2SD65	103A
2SD65-1	103A
2SD65A	103A
2SD65B	103A
2SD65C	103A
2SD65D	103A
2SD65E	103A
2SD65F	103A
2SD65G	103A
2SD65GN	103A
2SD65H	103A
2SD65J	103A
2SD65K	103A
2SD65L	103A
2SD65M	103A
2SD65OR	103A
2SD65R	103A
2SD65X	103A
2SD65Y	103A
2SD66	103A
2SD66A	103A
2SD66B	103A
2SD66C	103A
2SD66D	103A
2SD66E	103A
2SD66F	103A
2SD66G	103A
2SD66GN	103A
2SD66H	103A
2SD66J	103A
2SD66K	103A
2SD66L	103A
2SD66M	103A
2SD66OR	103A
2SD66R	103A
2SD66X	103A
2SD66Y	103A
2SD67	162
2SD67B	162
2SD67C	162
2SD67D	162
2SD67E	162
2SD68A	181
2SD68F	181
2SD68G	181
2SD68GN	181
2SD68H	181
2SD68J	181
2SD68L	181
2SD68M	181
2SD68OR	181
2SD68R	181
2SD68X	181
2SD68Y	181
2SD69	130
2SD70	175
2SD70A	181
2SD70B	181
2SD70C	181
2SD70D	181
2SD70E	181
2SD70F	181
2SD70G	181
2SD70GN	181
2SD70H	181
2SD70J	181
2SD70K	181
2SD70L	181
2SD70M	181
2SD70OR	181
2SD70R	181
2SD70X	181
2SD70Y	181
2SD71	175
2SD71L	289
2SD72	103A
2SD72(K)	103A
2SD72-2C	103A
2SD72-3C	103A
2SD72-4C	103A
2SD72-6	103A
2SD72-OR	103A
2SD72A	103A
2SD72B	103A
2SD72BR	103A
2SD72C	103A
2SD72D	103A
2SD72E	103A
2SD72EJ	103A
2SD72F	103A
2SD72G	103A
2SD72GA	103A
2SD72H	103A
2SD72J	103A
2SD72K	103A
2SD72L	103
2SD72M	103A
2SD72OR	103A

PART NUMBER	NTE REPLACEMENT
2SD72P	103A
2SD72R	103A
2SD72RE	103A
2SD72X	103A
2SD72Y	103A
2SD73	280
2SD73A	280
2SD73B	280
2SD73C	280
2SD73E	280
2SD74	280
2SD74A	280
2SD74B	280
2SD74C	280
2SD74D	280
2SD74E	280
2SD75	103A
2SD75(A)	103A
2SD75(B)	103A
2SD75A	103A
2SD75AH	103A
2SD75B	103A
2SD75C	103A
2SD75D	103A
2SD75E	103A
2SD75F	103A
2SD75G	103A
2SD75GN	103A
2SD75H	103A
2SD75J	103A
2SD75K	103A
2SD75L	103A
2SD75M	103A
2SD750R	103A
2SD77	103A
2SD77-A	103A
2SD77A	103A
2SD77AH	103A
2SD77B	103A
2SD77C	103A
2SD77D	103A
2SD77E	103A
2SD77F	103A
2SD77G	103A
2SD77GN	103A
2SD77H	103A
2SD77J	103A
2SD77L	103A
2SD77M	103A
2SD770R	103A
2SD77P	103A
2SD77R	103A
2SD77X	103A
2SD77Y	103A
2SD79	225
2SD79A	225
2SD79B	225
2SD79C	225
2SD79D	225
2SD80	130
2SD80A	181
2SD80B	181
2SD80C	181
2SD80D	181
2SD80E	181
2SD80F	181
2SD80G	181
2SD80GN	181
2SD80H	181
2SD80J	181
2SD80K	181
2SD80L	181
2SD800R	181
2SD80R	181
2SD80X	181
2SD80Y	181
2SD81	130
2SD81A	181
2SD81B	181
2SD81C	181
2SD81E	181
2SD81F	181
2SD81G	181
2SD81GN	181
2SD81H	181
2SD81J	181
2SD81K	181
2SD81L	181
2SD81M	181
2SD810R	181
2SD81R	181
2SD81X	181
2SD81Y	181
2SD82	130
2SD82-OR	130
2SD82A	130
2SD82B	130
2SD82C	130
2SD82D	130
2SD82E	130
2SD82F	130
2SD82G	130
2SD82GN	130
2SD82H	130
2SD82J	130
2SD82K	130
2SD82L	130
2SD82M	130
2SD820R	130
2SD82R	130
2SD82X	130
2SD82Y	130
2SD83	162
2SD84	162

PART NUMBER	NTE REPLACEMENT
2SD88	87
2SD88-1A	87
2SD88-2	87
2SD88-3	87
2SD88-A	87
2SD88A	87
2SD88A-1	87
2SD90	152
2SD90A	152
2SD90B	152
2SD90C	152
2SD90D	152
2SD90E	152
2SD90F	152
2SD90G	152
2SD90GN	152
2SD90H	152
2SD90J	152
2SD90K	152
2SD90L	152
2SD90M	152
2SD900R	152
2SD90X	152
2SD90Y	152
2SD91	152
2SD91A	152
2SD91B	152
2SD91C	152
2SD91D	152
2SD91E	152
2SD91F	152
2SD91G	152
2SD91GN	152
2SD91H	152
2SD91J	152
2SD91L	152
2SD91M	152
2SD91OR	152
2SD91R	152
2SD91X	152
2SD91Y	152
2SD92	175
2SD92D	175
2SD93	162
2SD94	124
2SD96	103A
2SD96A	103A
2SD96B	103A
2SD96C	103A
2SD96D	103A
2SD96E	103A
2SD96F	103A
2SD96G	103A
2SD96GN	103A
2SD96H	103A
2SD96J	103A
2SD96K	103A
2SD96L	103A
2SD960R	103A
2SD96R	103A
2SD96X	103A
2SD96Y	103A
2SD100	103A
2SD100A	103A
2SD100B	103A
2SD100C	103A
2SD100D	103A
2SD100E	103A
2SD100F	103A
2SD100G	103A
2SD100GN	103A
2SD100H	103A
2SD100J	103A
2SD100K	103A
2SD100L	103A
2SD100M	103A
2SD1000R	103A
2SD100R	103A
2SD100X	103A
2SD100Y	103A
2SD101	101
2SD102	175
2SD102-O	175
2SD102-R	175
2SD102-Y	175
2SD102A	293
2SD102B	293
2SD102C	293
2SD102D	293
2SD102E	293
2SD102F	293
2SD102G	293
2SD102GN	293
2SD102H	293
2SD102J	293
2SD102K	293
2SD102L	293
2SD102M	293
2SD102OR	293
2SD102R	293
2SD102X	293
2SD102Y	293
2SD103	175
2SD103-0	175
2SD103-R	175
2SD103-Y	175
2SD104	103A
2SD104A	103A
2SD104B	103A
2SD104C	103A
2SD104D	103A
2SD104E	103A
2SD104F	103A
2SD104G	103A

PART NUMBER	NTE REPLACEMENT
2SD104GN	103A
2SD104H	103A
2SD104K	103A
2SD104L	103A
2SD104M	103A
2SD1040R	103A
2SD104R	103A
2SD104X	103A
2SD104Y	103A
2SD105	103A
2SD105A	103A
2SD105B	103A
2SD105C	103A
2SD105D	103A
2SD105E	103A
2SD105F	103A
2SD105G	103A
2SD105GN	103A
2SD105H	103A
2SD105J	103A
2SD105K	103A
2SD105L	103A
2SD105M	103A
2SD1050R	103A
2SD105R	103A
2SD105X	103A
2SD105Y	103A
2SD107	130
2SD108	130
2SD110	162
2SD110-0	162
2SD110-O	162
2SD110-R	162
2SD110-Y	162
2SD111	162
2SD111-0	162
2SD111-ORG	181
2SD111-R	162
2SD111-RED	181
2SD111-Y	162
2SD111-YEL	181
2SD111R	162
2SD113	181
2SD113-0	181
2SD113-ORG	181
2SD113-R	181
2SD113-RED	181
2SD113-Y	181
2SD113-YEL	181
2SD113R	181
2SD114	181
2SD114-0	181
2SD114-ORG	181
2SD114-R	181
2SD114-RED	181
2SD114-Y	181
2SD114-YEL	181
2SD114R	181
2SD116	130
2SD117	328
2SD118	280
2SD118-B	181
2SD118-BLU	181
2SD118-R	181
2SD118-RED	181
2SD118-Y	181
2SD118-YEL	181
2SD118A	181
2SD118BL	280
2SD118C	181
2SD118D	181
2SD118R	280
2SD118Y	280
2SD119	280
2SD119-BL	280
2SD119-BLU	280
2SD119-R	280
2SD119-RED	280
2SD119-Y	280
2SD119-YEL	280
2SD119A	280
2SD119B	280
2SD119BL	280
2SD119C	280
2SD119D	280
2SD119R	280
2SD119Y	280
2SD120	324
2SD120A	324
2SD120B	324
2SD120C	324
2SD120D	324
2SD120E	324
2SD120F	324
2SD120G	324
2SD120GN	324
2SD120H	324
2SD120HA	324
2SD120HB	324
2SD120HC	324
2SD120J	324
2SD120K	324
2SD120L	324
2SD120M	324
2SD120OR	324
2SD120R	324
2SD120X	324
2SD120Y	324
2SD121	324
2SD121A	324
2SD121B	324
2SD121C	324
2SD121D	324
2SD121E	324

PART NUMBER	NTE REPLACEMENT
2SD121F	324
2SD121G	324
2SD121GN	324
2SD121H	324
2SD121HA	324
2SD121HB	324
2SD121J	324
2SD121K	324
2SD121L	324
2SD121M	324
2SD1210R	324
2SD121R	324
2SD121X	324
2SD121Y	324
2SD122	152
2SD123	291
2SD124	280
2SD124A	280
2SD124AH	280
2SD124AHA	280
2SD124AHB	280
2SD124B	181
2SD124C	181
2SD124E	181
2SD124F	181
2SD124G	181
2SD124GN	181
2SD124H	181
2SD124J	181
2SD124K	181
2SD124L	181
2SD124M	181
2SD1240R	181
2SD124R	181
2SD124X	181
2SD124Y	181
2SD125	280
2SD125A	280
2SD125AH	280
2SD125AHA	280
2SD125AHB	280
2SD125B	181
2SD125C	181
2SD125E	181
2SD125F	181
2SD125G	181
2SD125GN	181
2SD125H	181
2SD125J	181
2SD125K	181
2SD125L	181
2SD125M	181
2SD125OR	181
2SD125R	181
2SD125X	181
2SD125Y	181
2SD126	280
2SD126A	280
2SD126AH	280
2SD126AHA	280
2SD126AHB	280
2SD126H	280
2SD126HA	280
2SD126HB	280
2SD126S	87
2SD127	103A
2SD127A	103A
2SD127C	103A
2SD127D	103A
2SD127F	103A
2SD127G	103A
2SD127GN	103A
2SD127H	103A
2SD127J	103A
2SD127K	103A
2SD127M	103A
2SD1270R	103A
2SD127R	103A
2SD127X	103A
2SD127Y	103A
2SD128	103A
2SD128A	103A
2SD128B	103A
2SD128C	103A
2SD128D	103A
2SD128E	103A
2SD128F	103A
2SD128G	103A
2SD128GN	103A
2SD128H	103A
2SD128J	103A
2SD128K	103A
2SD128L	103A
2SD128M	103A
2SD1280R	103A
2SD128R	103A
2SD128Y	103A
2SD129	175
2SD129-BL	175
2SD129-R	175
2SD129-RED	103A
2SD129-Y	175
2SD130	175
2SD130(BL)	175
2SD130(Y)	175
2SD130-BLU	175
2SD130-R	175
2SD130-RED	175
2SD130-Y	175
2SD130-YEL	175
2SD130A	175
2SD130B	175
2SD130BL	175
2SD130C	175

PART NUMBER	NTE REPLACEMENT
2SD130D	175
2SD130E	175
2SD130F	175
2SD130G	175
2SD130GN	175
2SD130H	175
2SD130J	175
2SD130K	175
2SD1300R	175
2SD130R	175
2SD130X	175
2SD130Y	175
2SD132	181
2SD134	123
2SD134A	293
2SD134C	293
2SD134D	293
2SD134F	293
2SD134G	293
2SD134GN	293
2SD134H	293
2SD134J	293
2SD134K	293
2SD134L	293
2SD134M	293
2SD1340R	293
2SD134R	293
2SD134X	293
2SD134Y	293
2SD136	124
2SD136D	293
2SD136E	293
2SD136F	293
2SD136G	293
2SD136GN	293
2SD136J	293
2SD136K	293
2SD136L	293
2SD136M	293
2SD1360R	293
2SD136R	293
2SD136X	293
2SD136Y	293
2SD137	124
2SD137A	124
2SD137B	124
2SD137C	124
2SD137D	124
2SD137F	124
2SD137G	124
2SD137H	124
2SD137J	124
2SD137K	124
2SD137L	124
2SD137M	124
2SD1370R	124
2SD137R	124
2SD137X	124
2SD137Y	124
2SD141	152
2SD141A	152
2SD141B	152
2SD141C	152
2SD141E	152
2SD141F	152
2SD141G	152
2SD141GN	152
2SD141H	152
2SD141H01	152
2SD141H9Z	152
2SD141J	152
2SD141K	152
2SD141L	152
2SD141M	152
2SD1410R	152
2SD141R	152
2SD141X	152
2SD141Y	152
2SD142	175
2SD142A	175
2SD142B	175
2SD142C	175
2SD142D	175
2SD142E	175
2SD142F	175
2SD142G	175
2SD142GN	175
2SD142H	175
2SD142J	175
2SD142K	175
2SD142L	175
2SD142M	175
2SD1420R	175
2SD142R	175
2SD142X	175
2SD142Y	175
2SD143	175
2SD144	175
2SD145	175
2SD146	130
2SD146A	181
2SD146B	181
2SD146C	181
2SD146D	181
2SD146E	181
2SD146F	181
2SD146G	181
2SD146GN	181
2SD146H	181
2SD146J	181
2SD146K	181
2SD146L	181
2SD1460R	181
2SD146R	181
2SD146UK	130
2SD146VK	181
2SD146X	181
2SD146Y	181
2SD147	152
2SD147A	181
2SD147B	181
2SD147C	181
2SD147D	181
2SD147E	181
2SD147F	181
2SD147GN	181
2SD147H	181
2SD147J	181
2SD147K	181
2SD147L	181
2SD147M	181
2SD1470R	181
2SD147R	181
2SD147X	181
2SD147Y	181
2SD148	152
2SD149	152
2SD150	175
2SD150A	124
2SD150B	124
2SD150C	124
2SD150E	124
2SD150F	124
2SD150G	124
2SD150GN	124
2SD150H	124
2SD150J	124
2SD150K	124
2SD150L	124
2SD150M	124
2SD1500R	124
2SD150R	124
2SD150X	124
2SD150Y	124
2SD151	130
2SD151A	181
2SD151B	181
2SD151C	181
2SD151E	181
2SD151F	181
2SD151G	181
2SD151GN	181
2SD151H	181
2SD151J	181
2SD151K	181
2SD151L	181
2SD151M	181
2SD1510R	181
2SD151R	181
2SD151Y	181
2SD152	164
2SD152(L)	175
2SD152(M)	175
2SD152A	175
2SD152B	175
2SD152C	175
2SD152D	175
2SD152E	175
2SD152F	175
2SD152G	175
2SD152GN	175
2SD152H	175
2SD152J	175
2SD152K	175
2SD152L	175
2SD152M	175
2SD1520R	175
2SD152R	175
2SD152X	175
2SD152Y	175
2SD154	152
2SD154(L)	291
2SD154A	291
2SD154B	291
2SD154C	291
2SD154E	291
2SD154F	291
2SD154G	291
2SD154GN	291
2SD154H	291
2SD154J	291
2SD154K	291
2SD154L	291
2SD154M	291
2SD154R	291
2SD154X	291
2SD154Y	291
2SD155	175
2SD155(K)	291
2SD155(L)	175
2SD155H	291
2SD155K	175
2SD155L	175
2SD156	124
2SD156B	124
2SD156C	124
2SD156D	124
2SD156E	124
2SD156F	124
2SD156G	124
2SD156GN	124
2SD156H	124
2SD156K	124
2SD156L	124
2SD156M	124
2SD1560R	124
2SD156R	124
2SD156X	124
2SD156Y	124
2SD157	124
2SD157A	124
2SD157B	124
2SD157C	124
2SD157D	124
2SD157G	124
2SD157GN	124
2SD157H	124
2SD157J	124
2SD157K	124
2SD157L	124
2SD1570R	124
2SD157R	124
2SD157X	124
2SD157Y	124
2SD158	124
2SD158A	124
2SD158B	124
2SD158C	124
2SD158D	124
2SD158E	124
2SD158F	124
2SD158GN	124
2SD158H	124
2SD158J	124
2SD158K	124
2SD158L	124
2SD158M	124
2SD1580R	124
2SD158R	124
2SD158X	124
2SD158Y	124
2SD159	124
2SD159A	124
2SD159B	124
2SD159C	124
2SD159D	124
2SD159E	124
2SD159F	124
2SD159G	124
2SD159GN	124
2SD159H	124
2SD159J	124
2SD159K	124
2SD159L	124
2SD159M	124
2SD1590R	124
2SD159R	124
2SD159X	124
2SD159Y	124
2SD161	101
2SD161A	103A
2SD161B	103A
2SD161C	103A
2SD161D	103A
2SD161E	103A
2SD161F	103A
2SD161G	103A
2SD161GN	103A
2SD161H	103A
2SD161J	103A
2SD161K	103A
2SD161L	103A
2SD161M	103A
2SD1610R	103A
2SD161R	103A
2SD161X	103A
2SD161Y	103A
2SD162	101
2SD162A	181
2SD162B	181
2SD162C	181
2SD162D	181
2SD162E	181
2SD162F	181
2SD162G	181
2SD162GN	181
2SD162H	181
2SD162J	181
2SD162K	103A
2SD162L	181
2SD162M	181
2SD1620R	181
2SD162R	181
2SD162X	181
2SD162Y	181
2SD163	130
2SD163A	181
2SD163B	181
2SD163C	181
2SD163D	181
2SD163E	181
2SD163F	181
2SD163G	181
2SD163GN	181
2SD163H	181
2SD163J	181
2SD163K	181
2SD163L	181
2SD163M	181
2SD1630R	181
2SD163R	181
2SD163X	181
2SD163Y	181
2SD164	130
2SD164A	181
2SD164B	181
2SD164C	181
2SD164D	181
2SD164E	181
2SD164F	181
2SD164G	181
2SD164GN	181
2SD164H	181
2SD164J	181
2SD164K	181
2SD164L	181
2SD164M	181
2SD1640R	181
2SD164R	181
2SD164X	181
2SD164Y	181
2SD165	162
2SD166	162
2SD167	101
2SD167A	181
2SD167B	181
2SD167C	181
2SD167E	181
2SD167F	181
2SD167G	181
2SD167GN	181
2SD167H	181
2SD167J	181
2SD167K	181
2SD167L	181
2SD167M	181
2SD1670R	181
2SD167R	181
2SD167X	181
2SD167Y	181
2SD170	103A
2SD170A	103A
2SD170AA	103A
2SD170AB	103A
2SD170AC	103A
2SD170B	103A
2SD170BC	103A
2SD170C	103A
2SD170PB	103A
2SD172	181
2SD172A	181
2SD172B	181
2SD172C	181
2SD172D	181
2SD172E	181
2SD172F	181
2SD172G	181
2SD172GN	181
2SD172H	181
2SD172J	181
2SD172K	181
2SD172L	181
2SD172M	181
2SD1720R	181
2SD172R	181
2SD172X	181
2SD172Y	181
2SD173	130
2SD173A	181
2SD173B	181
2SD173C	181
2SD173D	181
2SD173E	181
2SD173F	181
2SD173G	181
2SD173GN	181
2SD173H	181
2SD173J	181
2SD173K	181
2SD173M	181
2SD173OR	181
2SD173X	181
2SD173Y	181
2SD174	130
2SD174A	283
2SD174B	283
2SD174C	283
2SD174D	283
2SD174E	283
2SD174F	283
2SD174G	283
2SD174GN	283
2SD174H	283
2SD174J	283
2SD174K	283
2SD174L	283
2SD174M	283
2SD174R	283
2SD174X	283
2SD174Y	283
2SD175	130
2SD175A	130
2SD175B	130
2SD175C	130
2SD175D	130
2SD175E	130
2SD175F	130
2SD175G	130
2SD175GN	130
2SD175H	130
2SD175J	130
2SD175K	130
2SD175L	130
2SD175M	130
2SD175OR	130
2SD175R	130
2SD175X	130
2SD175Y	130
2SD176	130
2SD176A	181
2SD176B	181
2SD176C	181
2SD176D	181
2SD176E	181
2SD176F	181
2SD176G	181
2SD176GN	181
2SD176H	181
2SD176J	181
2SD176K	181
2SD176L	181
2SD176M	181
2SD176OR	181
2SD176X	181
2SD176Y	181
2SD177	162
2SD178	103A
2SD178A	103A
2SD178B	103A
2SD178C	103A
2SD178D	103A
2SD178E	103A
2SD178F	103A
2SD178G	103A
2SD178GN	103A
2SD178H	103A
2SD178J	103A
2SD178K	103A
2SD178L	103A
2SD178M	103A
2SD178Q	103A
2SD178T	103A
2SD178X	103A
2SD178Y	103A
2SD180	87
2SD181	162
2SD182	128
2SD182A	128
2SD182B	128
2SD182C	128
2SD182D	128
2SD182E	128
2SD182F	128
2SD182G	128
2SD182GN	128
2SD182H	128
2SD182J	128
2SD182K	128
2SD182L	128
2SD1820R	128
2SD182R	128
2SD182X	128
2SD182Y	128
2SD183	128
2SD183B	128
2SD183E	128
2SD183GN	128
2SD183K	128
2SD183L	128
2SD183OR	128
2SD183R	128
2SD184	152
2SD184A	152
2SD184B	152
2SD184C	152
2SD184D	152
2SD184E	152
2SD184F	152
2SD184H	152
2SD184J	152
2SD184K	152
2SD184L	152
2SD184M	152
2SD1840R	152
2SD184Y	152
2SD185	152
2SD186	103A
2SD186A	103A
2SD186B	103A
2SD186C	103A
2SD186D	103A
2SD186E	103A
2SD186F	103A
2SD186G	103A
2SD186H	103A
2SD186J	103A
2SD186K	103A
2SD186L	103A
2SD186M	103A
2SD1860R	103A
2SD186R	103A
2SD186X	103A
2SD186Y	103A
2SD187	103A
2SD187-0R	103A
2SD187A	103A
2SD187B	103A
2SD187C	103A
2SD187D	103A
2SD187E	103A
2SD187F	103A
2SD187G	103A
2SD187GN	103A
2SD187H	103A
2SD187J	103A
2SD187K	103A
2SD187L	103A
2SD187M	103A
2SD187OR	103A
2SD187R	103A
2SD187X	103A
2SD187Y	103A
2SD188	130
2SD188A	130
2SD188B	130
2SD188C	130
2SD188D	130
2SD188E	130
2SD188F	130
2SD188G	130
2SD188GN	130
2SD188H	130
2SD188J	130
2SD188L	130
2SD188M	130
2SD1880R	130
2SD188R	130
2SD188X	130
2SD188Y	130
2SD189	162
2SD189A	162
2SD189B	181
2SD189C	181
2SD189D	181
2SD189E	181
2SD189F	181
2SD189G	181
2SD189GN	181
2SD189H	181
2SD189J	181
2SD189K	181
2SD189L	181
2SD189M	181
2SD1890R	181
2SD189R	181
2SD189X	181
2SD189Y	181
2SD190	124
2SD190B	124
2SD190C	124
2SD190D	124
2SD190E	124
2SD190F	124
2SD190GN	124
2SD190H	124
2SD190J	124
2SD190K	124
2SD190L	124
2SD190M	124
2SD1900R	124
2SD190R	124
2SD190X	124
2SD190Y	124
2SD191	103A
2SD192	103A
2SD193	103A
2SD194	103A
2SD195	101
2SD195A	101
2SD195B	103A
2SD195C	103A
2SD195D	103A
2SD195E	103A
2SD195F	103A
2SD195G	103A
2SD195GN	103A
2SD195H	103A
2SD195J	103A
2SD195K	103A
2SD195L	103A
2SD195M	103A
2SD1950R	103A
2SD195R	103A
2SD195X	103A
2SD195Y	103A
2SD198	94
2SD198(H)	94
2SD198(Q)	94
2SD198(Q)(P)	94
2SD198(R)	94
2SD198(R)(S)	94
2SD198-0R	94
2SD198A	94
2SD198AP	94
2SD198AQ	94
2SD198AR	94
2SD198B	94
2SD198C	94
2SD198D	94
2SD198F	94
2SD198G	94
2SD198H	94
2SD198HQ	94
2SD198HR	94
2SD198J	94
2SD198K	94
2SD1980R	94
2SD198P	94
2SD198Q	94
2SD198R	94
2SD198S	94
2SD198V	94
2SD198X	94
2SD198Y	94
2SD199	162
2SD200	389
2SD200-0R	165
2SD200A	165
2SD200B	165
2SD200C	165
2SD200D	165
2SD200E	165
2SD200F	165
2SD200G	165
2SD200GN	165
2SD200H	165
2SD200J	165
2SD200K	165
2SD200L	165
2SD200M	165
2SD2000R	165
2SD200X	165
2SD200Y	165
2SD201	130
2SD201(0)	130
2SD201-0	130
2SD201A	130
2SD201B	130
2SD201C	130
2SD201F	130
2SD201G	130
2SD201GN	130
2SD201H	130
2SD201J	130
2SD201K	130
2SD201L	130
2SD201M	130
2SD201M(0)	130
2SD201M(0,Y)	130
2SD201M(Y)	130
2SD201MO	130
2SD201MY	130
2SD201O	130
2SD201Q	130
2SD201X	130
2SD201Y	130
2SD202	162
2SD203	162
2SD204	128
2SD204(L)	128
2SD204A	128
2SD204B	128
2SD204BL	128
2SD204C	128
2SD204D	128
2SD204E	128
2SD204F	128
2SD204G	128
2SD204GA	128
2SD204GN	128
2SD204H	128
2SD204J	128
2SD204K	128
2SD204L	128
2SD204M	128
2SD204R	128
2SD204Y	128
2SD205	225
2SD205(L)	128
2SD205(M)	128
2SD205A	128
2SD205B	128
2SD205C	128
2SD205D	128
2SD205E	128
2SD205F	128
2SD205G	128
2SD205GN	128
2SD205H	128
2SD205J	128
2SD205L	128
2SD205M	128
2SD2050R	128
2SD205R	128
2SD205X	128
2SD205Y	128
2SD211	130
2SD211-0R	130
2SD211A	130
2SD211B	130
2SD211C	130
2SD211D	130
2SD211E	130
2SD211F	130
2SD211G	130
2SD211GN	130
2SD211H	130
2SD211J	130
2SD211K	130
2SD211L	130
2SD211M	130
2SD2110R	130
2SD211R	130
2SD211X	130
2SD211Y	130
2SD212	130
2SD212A	181
2SD212B	181
2SD212C	181
2SD212D	181
2SD212E	181
2SD212F	181
2SD212G	181
2SD212GN	181
2SD212H	181
2SD212J	181
2SD212K	181
2SD212L	181
2SD212M	181
2SD2120R	181
2SD212R	181
2SD212X	181
2SD212Y	181
2SD213	162
2SD214	328
2SD215	103
2SD216	297
2SD217	162
2SD218	87
2SD219	128
2SD219A	128
2SD219B	128
2SD219C	128
2SD219D	128
2SD219E	128
2SD219F	128
2SD219G	128
2SD219GN	128

PART NUMBER	NTE REPLACEMENT
2SD219H	128
2SD219J	128
2SD219K	128
2SD219L	128
2SD219M	128
2SD219OR	128
2SD219R	128
2SD219X	128
2SD219Y	128
2SD220	128
2SD220A	128
2SD220B	128
2SD220C	128
2SD220D	128
2SD220E	128
2SD220F	128
2SD220G	128
2SD220GN	128
2SD220H	128
2SD220J	128
2SD220K	128
2SD220L	128
2SD220M	128
2SD220OR	128
2SD220R	128
2SD220X	128
2SD220Y	128
2SD221	128
2SD222A	324
2SD222B	324
2SD222C	324
2SD222D	324
2SD222E	324
2SD222F	324
2SD222G	324
2SD222GN	324
2SD222H	324
2SD222J	324
2SD222K	324
2SD222L	324
2SD222M	324
2SD222OR	324
2SD222R	324
2SD222X	324
2SD222Y	324
2SD223A	324
2SD223B	324
2SD223C	324
2SD223D	324
2SD223E	324
2SD223F	324
2SD223G	324
2SD223GN	324
2SD223H	324
2SD223J	324
2SD223K	324
2SD223L	324
2SD223M	324
2SD223OR	324
2SD223R	324
2SD223X	324
2SD223Y	324
2SD226	175
2SD226-0	175
2SD226-O	152
2SD226A	175
2SD226A(O)	152
2SD226AO	175
2SD226AP	175
2SD226B	175
2SD226BP	175
2SD226C	152
2SD226E	152
2SD226F	152
2SD226G	152
2SD226GN	152
2SD226H	152
2SD226J	152
2SD226K	152
2SD226L	152
2SD226M	152
2SD226O	175
2SD226OR	152
2SD226P	175
2SD226Q	175
2SD226R	152
2SD226X	152
2SD226Y	152
2SD227	85
2SD227(PANASONIC)	85
2SD227(R)	85
2SD227-175	85
2SD227-OR	85
2SD227G	85
2SD227GN	85
2SD227H	85
2SD227J	293
2SD227K	293
2SD227LF	85
2SD227M	85
2SD227OR	85
2SD227Q	85
2SD227R	85
2SD227S	85
2SD227V	85
2SD227W	85
2SD227X	85
2SD227Y	85
2SD228	289A
2SD228A	289A
2SD228B	289A
2SD228C	289A
2SD228D	289A
2SD228E	289A
2SD228F	289A
2SD228G	289A
2SD228GN	289A
2SD228H	289A
2SD228J	289A
2SD228K	289A
2SD228L	289A
2SD228M	289A
2SD228OR	289A
2SD228R	289A
2SD228X	289A
2SD228Y	289A
2SD231	181
2SD234	377
2SD234-0	152
2SD234-O	152
2SD234-ORG	152
2SD234-R	152
2SD234-RED	152
2SD234-Y	152
2SD234A	152
2SD234B	152
2SD234C	152
2SD234D	152
2SD234E	152
2SD234F	152
2SD234G	152
2SD234GA	152
2SD234GN	152
2SD234GR	152
2SD234H	152
2SD234J	152
2SD234K	152
2SD234L	152
2SD234M	152
2SD234N	152
2SD234OR	152
2SD234R	152
2SD234X	152
2SD234Y	152
2SD235	152
2SD235(O)	152
2SD235(Y)	152
2SD235-0	152
2SD235-O	152
2SD235-OR	152
2SD235-ORG	152
2SD235-R	152
2SD235-RED	152
2SD235-Y	152
2SD235A	152
2SD235B	152
2SD235C	152
2SD235D	152
2SD235E	152
2SD235F	152
2SD235G	152
2SD235GN	152
2SD235GR	152
2SD235H	152
2SD235J	152
2SD235L	152
2SD235LBY	152
2SD235M	152
2SD235OR	152
2SD235R	152
2SD235RED	152
2SD235RY	152
2SD235X	152
2SD235Y	152
2SD236	175
2SD236(02Y)	175
2SD236A	175
2SD236B	175
2SD236C	175
2SD236D	175
2SD236E	175
2SD236F	175
2SD236G	175
2SD236GN	175
2SD236H	175
2SD236J	175
2SD236K	175
2SD236L	175
2SD236M	175
2SD236R	175
2SD236X	175
2SD236Y	175
2SD237	175
2SD238	175
2SD238(F)	124
2SD238F	175
2SD241	152
2SD241H	130
2SD242	196
2SD243	291
2SD244	291
2SD246	165
2SD246A	165
2SD246B	165
2SD246C	165
2SD246D	165
2SD246E	165
2SD246F	165
2SD246G	165
2SD246GN	165
2SD246H	165
2SD246J	165
2SD246K	165
2SD246L	165
2SD246M	165
2SD246OR	165
2SD246R	165
2SD246X	165
2SD246Y	165
2SD247	328
2SD247K	124
2SD249	181
2SD250	181
2SD254	175
2SD255	175
2SD256	236
2SD257	175
2SD258	291
2SD259	291
2SD260	328
2SD261	192A
2SD261P	192A
2SD261Q	192A
2SD261R	192A
2SD261S	192A
2SD261V	192A
2SD261W	192A
2SD262	283
2SD265	283
2SD266	283
2SD273	283
2SD274	283
2SD283	162
2SD284	162
2SD285	162
2SD286	284
2SD287	284
2SD287A	162
2SD287B	162
2SD287C	162
2SD288	152
2SD288A	152
2SD288B	152
2SD288C	152
2SD288K	196
2SD288L	152
2SD289	152
2SD289A	152
2SD289B	152
2SD289C	152
2SD290	175
2SD290L	175
2SD291	175
2SD291(R)	175
2SD291-0	175
2SD291B	175
2SD291BL	175
2SD291C	175
2SD291D	175
2SD291E	175
2SD291F	175
2SD291G	175
2SD291GA	175
2SD291GN	175
2SD291H	175
2SD291J	175
2SD291K	175
2SD291L	175
2SD291M	175
2SD291OR	175
2SD291R	175
2SD291X	175
2SD291Y	175
2SD292	175
2SD292-0	152
2SD292A	152
2SD292B	152
2SD292BL	152
2SD292C	152
2SD292D	152
2SD292E	152
2SD292F	152
2SD292G	152
2SD292GA	152
2SD292GN	152
2SD292H	152
2SD292J	152
2SD292K	152
2SD292L	152
2SD292M	152
2SD292OR	152
2SD292R	152
2SD292X	152
2SD292Y	152
2SD293	283
2SD294	283
2SD297	175
2SD299	238
2SD299(V)	238
2SD299A	238
2SD299B	238
2SD299C	238
2SD299E	238
2SD299F	238
2SD299G	238
2SD299GN	238
2SD299H	238
2SD299J	238
2SD299K	238
2SD299M	238
2SD299OR	238
2SD299R	238
2SD299SL	238
2SD299V	238
2SD299X	238
2SD299Y	238
2SD300	165
2SD300A	165
2SD300B	165
2SD300C	165
2SD300D	165
2SD300G	165
2SD300H	165
2SD300J	165
2SD312	164
2SD312A	164
2SD312B	164
2SD312C	164
2SD312D	164
2SD312E	164
2SD312F	164
2SD312G	164
2SD312GN	164
2SD312H	164
2SD312J	164
2SD312K	164
2SD312L	164
2SD312M	164
2SD312X	164
2SD312Y	164
2SD313	152
2SD313(D,E)	152
2SD313(DE)	152
2SD313(E)	152
2SD313(EF)	152
2SD313(F)	152
2SD313A	152
2SD313B	152
2SD313C	152
2SD313D	152
2SD313DE	152
2SD313E	152
2SD313F	152
2SD313G	152
2SD313GN	152
2SD313H	152
2SD313HP	152
2SD313HP-D	152
2SD313HP-E	152
2SD313K	152
2SD313L	152
2SD313M	152
2SD313N	152
2SD313P	152
2SD313R	152
2SD313RA	152
2SD313RA(D)	152
2SD313RA(E)	152
2SD313Y	152
2SD314	152
2SD314A	152
2SD314B	152
2SD314C	152
2SD314D	152
2SD314E	196
2SD314F	152
2SD314GN	152
2SD314H	152
2SD314L	152
2SD314M	152
2SD314N	152
2SD314R	152
2SD314Y	152
2SD315	175
2SD315C	175
2SD315D	175
2SD315E	175
2SD316	284
2SD317	152
2SD317A	152
2SD317A(F)	186
2SD317A(F)(P)	186
2SD317AF	186
2SD317AP	186
2SD317F	152
2SD317P	152
2SD318	152
2SD318(0)	152
2SD318-O	184
2SD318A	152
2SD318B	152
2SD318P	152
2SD318Q	184
2SD319	181
2SD320	162
2SD321	283
2SD322	280
2SD322A	280
2SD322B	280
2SD322C	280
2SD323	280
2SD323A	280
2SD323B	280
2SD323C	280
2SD324	124
2SD324E	198
2SD325	186
2SD325-C	152
2SD325-OR	186
2SD325A	186
2SD325B	186
2SD325C	186
2SD325D	152
2SD325E	186
2SD325F	186
2SD325G	186
2SD325GN	186
2SD325H	186
2SD325J	186
2SD325K	186
2SD325L	186
2SD325M	186
2SD325OR	186
2SD325R	186
2SD325X	186
2SD325Y	186
2SD326	124
2SD326A	124
2SD326B	124
2SD326C	124
2SD326D	124
2SD326E	124
2SD326L	124
2SD326M	124
2SD326OR	124
2SD326X	124
2SD326Y	124
2SD327	85
2SD327-P	85
2SD327-Q	85
2SD327-R	85
2SD327-S	85
2SD327-V	85
2SD327-W	85
2SD327L	85
2SD327OR	85
2SD327R	85
2SD328	128
2SD328S	210
2SD329	297
2SD330	152
2SD330A	196
2SD330D	152
2SD330E	152
2SD331	152
2SD334	162
2SD334A	162
2SD334R	162
2SD335	181
2SD336	192
2SD336R	192
2SD336Y	192
2SD338	181
2SD339	181
2SD340	130
2SD341	130
2SD341H	180
2SD342	196
2SD343	152
2SD343A	186
2SD343B	186
2SD343C	186
2SD343D	186
2SD343H	186
2SD343J	186
2SD343K	186
2SD344	196
2SD345	196
2SD346	196
2SD347	196
2SD348	238
2SD349	172A
2SD350	165
2SD350A	165
2SD350Q	165
2SD350T	165
2SD351	283
2SD352	103A
2SD352D	103A
2SD352E	103A
2SD352F	103A
2SD353	164
2SD355	297
2SD355C	297
2SD355D	297
2SD355E	297
2SD356	291
2SD356C	291
2SD356D	291
2SD356E	291
2SD357	291
2SD357C	291
2SD357D	291
2SD357E	291
2SD358	291
2SD358C	291
2SD358D	291
2SD358E	291
2SD359	152
2SD359-C	152
2SD359-D	152
2SD359C	152
2SD359C2	152
2SD359D	152
2SD359D1	152
2SD359D2	152
2SD359E	152
2SD360	152
2SD360-C	152
2SD360-D	152
2SD360C	152
2SD360D	152
2SD360E	152
2SD361	152
2SD361-C	152
2SD361-D	152
2SD361C	152
2SD361D	152
2SD362	54
2SD365	152
2SD365-O	152
2SD365A	152
2SD365B	152
2SD365H	152
2SD365P	152
2SD365Q	152
2SD366	152
2SD366-O	152
2SD366A	196
2SD366P	152
2SD366Q	152
2SD367	103A
2SD367A	103A
2SD367B	103A
2SD367C	103A
2SD367D	103A
2SD367E	103A
2SD367F	103A
2SD367H	293
2SD367J	293
2SD367K	293
2SD367L	293
2SD367M	293
2SD367OR	293
2SD367P	103A
2SD367R	293
2SD367X	293
2SD367Y	293
2SD368	165
2SD368A-D	238
2SD368A-E	238
2SD369	284
2SD369-O	284
2SD369-Y	284
2SD370	280
2SD371	130
2SD375	328
2SD376	162
2SD376A	162
2SD377	162
2SD378	224
2SD379	284
2SD379P	284
2SD379Q	284
2SD379R	284
2SD379S	284
2SD380	238
2SD380A	238
2SD381	291
2SD381K	291
2SD381L	291
2SD381M	291
2SD381N	291
2SD382	291
2SD382K	291
2SD382L	291
2SD382LM	291
2SD382M	291
2SD382N	291
2SD383	283
2SD386	375
2SD386A	375
2SD386A-D	375
2SD386A-E	375
2SD386AD	375
2SD386AE	375
2SD386AY	375
2SD386D	375
2SD386E	375
2SD386Y	375
2SD386YD	375
2SD386YE	375
2SD387	375
2SD387A	375
2SD387A-C	375
2SD387A-D	375
2SD387A-E	375
2SD387A-F	375
2SD387AC	375
2SD387AD	375
2SD387AE	375
2SD387AF	375
2SD387AS	375
2SD387C	375
2SD387D	375
2SD387E	375
2SD387F	375
2SD388	280
2SD389	152
2SD389(0)	152
2SD389(LP)	152
2SD389(O)	152
2SD389(O,LP,P)	152
2SD389(P)	152
2SD389-O	152
2SD389-OP	152
2SD389A	196
2SD389AF	152
2SD389AF0	152
2SD389AFO	152
2SD389AFP	152
2SD389AP	152
2SD389AQ	152
2SD389B	152
2SD389BL	152
2SD389BLB	152
2SD389BLB-O	152
2SD389BLB-P	152
2SD389BP	152
2SD389L	152
2SD389LB	152
2SD389LBP	152
2SD389LP	152
2SD389O	196
2SD389P	152
2SD389Q	152
2SD389R	152
2SD390	152
2SD390(0)	152
2SD390P	152
2SD390Q	186
2SD392	85
2SD392(BCE)	85
2SD392C(BCE)	85
2SD392D(BCE)	85
2SD392E(BCE)	85
2SD393	283
2SD394	238
2SD395	283
2SD396	283
2SD400	382
2SD400(E)	382
2SD400(F)	382
2SD400-D-MP	382
2SD400-E-MP	382
2SD400-F-MP	382
2SD400D	382
2SD400E	382
2SD400F	382
2SD400FZ	382
2SD400P1	293
2SD400P1D	293
2SD400P1E	293
2SD400P1F	293
2SD400P2	293
2SD401	375
2SD401(K)	375
2SD401(L)	375
2SD401-K	375
2SD401-L	375
2SD401-M	375
2SD401-O	375
2SD401-Y	375
2SD401/A	375
2SD401A	375
2SD401A-K	375
2SD401A-L	375
2SD401A-M	375
2SD401AK	375
2SD401AL	375
2SD401AM	375
2SD401B	375
2SD401E	375
2SD401EK	375
2SD401H	375
2SD401I	375
2SD401IJ	375
2SD401K	375
2SD401L	375
2SD401LA	375
2SD401LM	375
2SD401M	375
2SD401R	375
2SD401Y	375
2SD402	375
2SD402A	375
2SD402A-K	375
2SD402A-L	375
2SD402AK	375
2SD402AL	375
2SD402AM	375
2SD402K	375
2SD402L	375
2SD402M	375
2SD404	196
2SD404G	196
2SD405	261
2SD413	198
2SD414	373
2SD414-Q	373
2SD414-R	373
2SD414-S	373
2SD414Q	373
2SD414R	373
2SD414S	373
2SD415	373
2SD415-Q	373
2SD415-R	373
2SD415-S	373
2SD415P	373
2SD415Q	373
2SD415R	373
2SD415S	373
2SD415Y	373
2SD416	238
2SD417	162
2SD418	165
2SD422	175
2SD423	175
2SD424	284
2SD424-0	284
2SD424-R	284
2SD425	280
2SD425-R	280
2SD425O	280
2SD426	328
2SD426-R	280
2SD427	328
2SD427-R	328
2SD428	130
2SD428-R	328
2SD429	283
2SD430	328
2SD431	328
2SD432	328
2SD437	283
2SD438	382
2SD438D	382
2SD438E	382
2SD438F	382
2SD439	373
2SD439D	373
2SD439E	373
2SD439F	373
2SD458	163A
2SD461	163A
2SD463	243
2SD464	247

PART NUMBER	NTE REPLACEMENT
2SD467	85
2SD467A	85
2SD467B	85
2SD467BC	85
2SD467C	85
2SD467D	85
2SD468	293
2SD468-O	293
2SD468A	293
2SD468AC	293
2SD468B	293
2SD468BC	293
2SD468C	293
2SD468D	293
2SD468E	293
2SD468F	293
2SD468G	382
2SD468GN	293
2SD468L	293
2SD468LN	293
2SD468Y	293
2SD469	328
2SD471	293
2SD471(1)L	375
2SD471(A)	293
2SD471(K)	293
2SD471(L)	293
2SD471-L	293
2SD471-M	293
2SD471A	293
2SD471K	293
2SD471KA	293
2SD471L	293
2SD471LA	293
2SD471M	293
2SD471P	293
2SD471PQ	293
2SD471Q	293
2SD471R	293
2SD474K	161
2SD475	152
2SD476	196
2SD476A	196
2SD476B	196
2SD476C	196
2SD476D	196
2SD476G	152
2SD476YL	196
2SD477	152
2SD478	375
2SD478-08	375
2SD478A-01	375
2SD478B	373
2SD478BS	375
2SD478C	375
2SD478CS	375
2SD478D	373
2SD478Y	373
2SD478YL	198
2SD480	184
2SD481	184
2SD482	157
2SD483	157
2SD484	198
2SD485	184
2SD486	184
2SD487	184
2SD488	184
2SD489	184
2SD490	184
2SD491	182
2SD492	130
2SD493	182
2SD494	182
2SD495	182
2SD499	182
2SD500	182
2SD501	182
2SD502	243
2SD503	243
2SD504	247
2SD505	247
2SD506	247
2SD517	389
2SD518	175
2SD519	162
2SD520	181
2SD522	130
2SD523	243
2SD524	245
2SD525	54
2SD525-0	331
2SD525-O	331
2SD525R	54
2SD525Y	331
2SD526	241
2SD526-O	196
2SD531	196
2SD533	283
2SD538	283
2SD538A	283
2SD539	283
2SD539A	283
2SD544	196
2SD545	293
2SD545E	293
2SD545F	293
2SD545G	293
2SD546	369
2SD546K	369
2SD551	280
2SD552	388
2SD553	196
2SD553-0	54
2SD553-Y	54
2SD553Y	377
2SD555	87
2SD557	284
2SD560	261
2SD562	108
2SD562A	236
2SD562B	236
2SD562C	236
2SD562D	236
2SD562E	236
2SD562K	236
2SD562L	236
2SD562OR	236
2SD562R	236
2SD562X	236
2SD562Y	236
2SD563F	85
2SD568	196
2SD568(K)	196
2SD568K	196
2SD570	196
2SD571	315
2SD571K	315
2SD571L	293
2SD572	283
2SD573	283
2SD575	165
2SD575L	165
2SD576	157
2SD577	165
2SD579	175
2SD581	162
2SD581A	162
2SD582	280
2SD582A	280
2SD589	165
2SD590	128
2SD591	199
2SD591R	199
2SD592	293
2SD592A	293
2SD592C	293
2SD592N	293
2SD592Q	293
2SD592R	85
2SD593	198
2SD595QLB	291
2SD597	182
2SD598	162
2SD599	199
2SD600	373
2SD600D	373
2SD600E	373
2SD600K	373
2SD600KD	373
2SD600KE	373
2SD601	2408
2SD601(Q)	2408
2SD601(R)	2408
2SD601(S)	2408
2SD601A	2408
2SD601A-QW	2408
2SD601A-R	2408
2SD601AQ	2408
2SD601AQH	2408
2SD601AQW	2408
2SD601AR	2408
2SD601RS	2408
2SD602(R)	2406
2SD602(S)	2406
2SD603	289A
2SD603Q	289A
2SD603P	289A
2SD603Q	289A
2SD603R	289A
2SD604	162
2SD605	283
2SD606	283
2SD608	198
2SD612	184
2SD612E	184
2SD612F	184
2SD612K	184
2SD612K(E)	184
2SD612K-SA-E	184
2SD612KE	184
2SD613	377
2SD613(D)	377
2SD613(E)	377
2SD613D	377
2SD613E	377
2SD617	247
2SD619	306
2SD620	184
2SD621	62
2SD625	228A
2SD627	389
2SD628	247
2SD628Q	289
2SD630	181
2SD632	94
2SD632P	94
2SD632Q	94
2SD632R	94
2SD633	261
2SD635	261
2SD636	16
2SD636(BCE)	85
2SD636(Q)	16
2SD636(R)	16
2SD636(S)	16
2SD636(T)	16
2SD636-0	85
2SD636-O	85
2SD636-Q	16
2SD636-Q.R	16
2SD636-QRS	16
2SD636-R	16
2SD636-S	16
2SD636O(BCE)	85
2SD636P	85
2SD636P(BCE)	85
2SD636PQR	16
2SD636Q	16
2SD636Q(BCE)	85
2SD636QR	16
2SD636QRS	16
2SD636R	16
2SD636R.S.T	16
2SD636R(BCE)	85
2SD636RP	16
2SD636RS	16
2SD636S	16
2SD636T	16
2SD637	16
2SD637(C)	16
2SD637(Q)	16
2SD637(R)	16
2SD637(S)	16
2SD637(T)	16
2SD637-0	85
2SD637-O	85
2SD637-P	16
2SD637-PQR	16
2SD637-Q	16
2SD637-QR	16
2SD637-QRS	16
2SD637-R	16
2SD637-RS	16
2SD637-S	16
2SD637C	16
2SD637CR	16
2SD637D	85
2SD637O(BCE)	85
2SD637P	16
2SD637P(BCE)	85
2SD637PQ	16
2SD637PQR	16
2SD637Q	16
2SD637Q(BCE)	85
2SD637QR	16
2SD637QRS	16
2SD637R	16
2SD637R(BCE)	85
2SD637RS	16
2SD637RST	16
2SD637S	16
2SD637T	16
2SD638	18
2SD638(BCE)	85
2SD638(Q)	18
2SD638(R)	18
2SD638(S)	18
2SD638-Q	18
2SD638-R	18
2SD638-S	18
2SD638P(BCE)	85
2SD638PQR	18
2SD638Q	18
2SD638Q(BCE)	85
2SD638QR	18
2SD638R	18
2SD638R(BCE)	85
2SD638S	18
2SD638S(BCE)	85
2SD638T	85
2SD639	18
2SD639(BCE)	289A
2SD639(Q)	18
2SD639(R)	18
2SD639(S)	18
2SD639-Q	18
2SD639-R	18
2SD639-S	18
2SD639P(BCE)	289A
2SD639Q	18
2SD639Q(BCE)	289A
2SD639R	18
2SD639R(BCE)	289A
2SD639S	18
2SD639S(BCE)	289A
2SD639T	289
2SD640	283
2SD641	53
2SD643(Q)	19
2SD643(R)	19
2SD644R	199
2SD649	165
2SD649Q	165
2SD655	315
2SD655(E)	315
2SD655(F)	315
2SD655D	315
2SD655E	315
2SD655EF	315
2SD655F	315
2SD656	175
2SD657	162
2SD660	224
2SD661	16
2SD661(R)	16
2SD661(S)	16
2SD661(T)	16
2SD661-R	16
2SD661R	16
2SD661RS	16
2SD661S	16
2SD661ST	16
2SD661T	16
2SD662	287
2SD662(Q)	287
2SD662(R)	287
2SD663	283
2SD666	382
2SD666A	382
2SD666AB	382
2SD666AC	382
2SD666B	382
2SD666C	382
2SD667	382
2SD667A	382
2SD667AB	382
2SD667AC	382
2SD667AD	382
2SD667B	382
2SD667C	382
2SD667D	382
2SD668	373
2SD668A	373
2SD668AB	373
2SD668AC	373
2SD668B	373
2SD668C	373
2SD668D	373
2SD669	373
2SD669A	373
2SD669AB	373
2SD669AC	373
2SD669AD	373
2SD669B	373
2SD669C	373
2SD669D	373
2SD671	289
2SD673	328
2SD674	328
2SD675	284
2SD676	284
2SD677	162
2SD685Q	85
2SD687	261
2SD692	243
2SD692Q	247
2SD693	162
2SD704	377
2SD705	283
2SD706	162
2SD707	283
2SD710-14	85
2SD712	331
2SD716	36
2SD717	390
2SD718	36
2SD720D	103A
2SD720E	103A
2SD720PJ	103A
2SD721	261
2SD723	291
2SD724	375
2SD725	165
2SD725-06	238
2SD726	291
2SD726B	291
2SD726C	291
2SD726D	291
2SD727	36
2SD728	36
2SD729	251
2SD732	328
2SD733	284
2SD733C	284
2SD733D	284
2SD733E	284
2SD733K	284
2SD733KC	284
2SD733KD	284
2SD733KE	284
2SD733U	293
2SD734	85
2SD734(E)-AA	85
2SD734(F)	85
2SD734(F)-AA	85
2SD734(G)	85
2SD734(G)-AA	85
2SD734-AA	85
2SD734-NP	85
2SD734-T	85
2SD734D	85
2SD734E	85
2SD734F	85
2SD734G	85
2SD734NP	85
2SD735	103
2SD735B	92
2SD736	33
2SD736AB	92
2SD736AC	92
2SD736B	92
2SD736C	92
2SD738	33
2SD743	291
2SD743A	291
2SD744	382
2SD745	92
2SD748	163A
2SD748A	163A
2SD748A-01	87
2SD749	163A
2SD753	284
2SD754	123AP
2SD754B	123AP
2SD754C	123AP
2SD755	90
2SD756	90
2SD756A	90
2SD756E	90
2SD756G	90
2SD757	198
2SD758	376
2SD758C	376
2SD759	375
2SD761	375
2SD761D	375
2SD761E	375
2SD761UL	375
2SD761VR	375
2SD761VRD	375
2SD761VRE	375
2SD762	152
2SD762-0	152
2SD762-0P	152
2SD762-P	152
2SD762OP	152
2SD762P	152
2SD762PLB	152
2SD762Q	152
2SD762R	152
2SD763	382
2SD763A	92
2SD764	389
2SD765	165
2SD766	369
2SD766D	369
2SD766P	369
2SD766Q	369
2SD766R	369
2SD767	289A
2SD767(R)	289A
2SD767(S)	289A
2SD767R	289A
2SD767S	289A
2SD772	375
2SD772B	375
2SD772BLB	375
2SD773	293
2SD773-4	293
2SD773-34	293
2SD773K	293
2SD773U	293
2SD774	382
2SD774-3	382
2SD774-4	382
2SD774-34	382
2SD774-K	382
2SD774K	382
2SD774U	382
2SD777	94
2SD777(FA-5)	94
2SD777-1	94
2SD777FA-5	94
2SD778	85
2SD778(BCE)	85
2SD778Q	199
2SD778Q(BCE)	85
2SD778R	199
2SD778R(BCE)	85
2SD779(BCE)	85
2SD781	373
2SD786R	85
2SD787D	382
2SD787E	382
2SD788	293
2SD788-3	293
2SD788-4	293
2SD788-5	293
2SD788C	293
2SD788D	293
2SD788E	293
2SD789	315
2SD789(B)	315
2SD789(C)	315
2SD789(D)	315
2SD789(E)	315
2SD789-03C	315
2SD789-3	315
2SD789-4	315
2SD789B	315
2SD789C	315
2SD789D	315
2SD789E	315
2SD789M	315
2SD789P	315
2SD790	382
2SD790B	382
2SD790C	382
2SD792S	238
2SD792T	238
2SD793	184
2SD793Q	373
2SD794	184
2SD794A	184
2SD794AD	184
2SD794AP	184
2SD794AQ	184
2SD794D	184
2SD794P	184
2SD795A	236
2SD795AQ	236
2SD795P	236
2SD795Q	236
2SD797	387
2SD803Q	247
2SD804	152
2SD804B	152
2SD804H	152
2SD804HLB	152
2SD804HLP	152
2SD804HP	152
2SD804L	152
2SD807	165
2SD807M	165
2SD809	373
2SD812	54
2SD818	389
2SD819	389
2SD820	165
2SD820-1	165
2SD820FA-1	165
2SD821	165
2SD822	238
2SD823	379
2SD824	92
2SD825	33
2SD826	33
2SD829	107
2SD836	261
2SD836Q	261
2SD836R	261
2SD837	261
2SD837APQ	261
2SD837AQ	261
2SD837AR	261
2SD837B	261
2SD837LB	261
2SD837LBPQ	261
2SD837P	261
2SD837PQ	261
2SD837Q	261
2SD837R	261
2SD838	62
2SD843	377
2SD843(Y)	377
2SD843-O	331
2SD843-Y	331
2SD843Y	377
2SD844	36
2SD845	33
2SD845-O	33
2SD845-R	33
2SD845O	33
2SD845R	33
2SD847	2304
2SD850	389
2SD856	377
2SD856(LB)	377
2SD856(P)	377
2SD856(Q)	377
2SD856(R)	377
2SD856B	377
2SD856L	377
2SD856LB	377
2SD856M	377
2SD856M(LB)	377
2SD856P	377
2SD856PQ	377
2SD856Q	377
2SD856Q(LB)	377
2SD856R	377
2SD856S	377
2SD857	54
2SD858	390
2SD863	382
2SD863D	382
2SD863E	382
2SD863E-AE	382
2SD863F	382
2SD866	377
2SD866(P)	377
2SD866(Q)	377
2SD866B	377
2SD866P	377
2SD866Q	377
2SD866R	377
2SD866S	377
2SD868	89
2SD869	89
2SD869-14	89
2SD869-L	89
2SD869B	89
2SD869FA	89
2SD869L	89
2SD870	89
2SD870,FA	89
2SD870A	89
2SD870FA	89
2SD870Z	89
2SD871	89
2SD871Z	89
2SD873	388
2SD876	375
2SD879	11
2SD880	152
2SD880-0	152
2SD880-0LBGL2	152
2SD880-4	152
2SD880-OLBGL2	152
2SD880-Y	152
2SD880GR	152
2SD880Y	152
2SD880YLBGL2	152
2SD882	184
2SD882(P)	184
2SD882-P	184
2SD882E	184
2SD882P	184
2SD882PM	184
2SD882Q	184
2SD882R	184
2SD886	56
2SD886A	56
2SD886AO	56
2SD886P	56
2SD886Q	56
2SD889Q	199
2SD889R	199
2SD889S	85
2SD889T	199
2SD892A	46
2SD892A-Q	46
2SD892AQ	46
2SD892AR	46
2SD894	253
2SD895	36
2SD896	36
2SD897	89
2SD897A	89
2SD898	89
2SD898-B13	89
2SD898A	89
2SD898B	89
2SD898B-13	89
2SD899	89
2SD900	89
2SD900A	89
2SD900B	89
2SD900B-06	89
2SD903	89
2SD904	89
2SD904K	89
2SD904P	89
2SD906	89
2SD907	390
2SD908	36
2SD909	36
2SD910	36
2SD911	328
2SD913	327
2SD914	327
2SD916	261
2SD917	2308
2SD918	331
2SD919(BCE)	85
2SD920	162
2SD921	2307
2SD946	253
2SD946-Q	253
2SD946-Q.R	253
2SD946-R	253
2SD946A	253
2SD946B	253
2SD947	253
2SD950	89
2SD950Q	389
2SD951	89
2SD951Q	389
2SD952	89
2SD953	89
2SD956	89
2SD957	89
2SD957A	89
2SD957A-03	89
2SD958	90
2SD958(R)	90
2SD958(S)	90
2SD958R	90
2SD958S	90
2SD958T	90
2SD958U	90
2SD959	54
2SD960	54
2SD960Q	291
2SD961	54
2SD965	11
2SD965P	11
2SD965Q	11
2SD965R	11
2SD973	20
2SD973(Q)	20
2SD973(R)	20
2SD973(S)	20
2SD973A	382
2SD973AR	382
2SD973Q	20
2SD973R	20
2SD973S	20
2SD975	373
2SD975C	373
2SD976	379
2SD985	259
2SD985K	259
2SD986	253
2SD993	89
2SD993A	89
2SD994	89
2SD1010R	199
2SD1010S	199
2SD1011	90
2SD1011R	90
2SD1011S	90
2SD1011T	90
2SD1012	85
2SD1012F	382
2SD1012G1	382
2SD1012J	382
2SD1015D	375
2SD1015E	375
2SD1015F	375
2SD1016	89
2SD1020	293
2SD1020H	293
2SD1029	152
2SD1032	390
2SD1044	215
2SD1046	36

PART NUMBER	NTE REPLACEMENT
2SD1047	36
2SD1049	392
2SD1051	293
2SD1051(Q)	293
2SD1051(R)	293
2SD1051Q	293
2SD1051R	293
2SD1052	56
2SD1052-A	56
2SD1052A	56
2SD1052AFA	52
2SD1055	20
2SD1055P	20
2SD1055Q	20
2SD1055R	20
2SD1060	377
2SD1060-O	377
2SD1060-Y	377
2SD1061	377
2SD1062	377
2SD1062Q	377
2SD1062R	377
2SD1063	2304
2SD1063Q	2304
2SD1063R	2304
2SD1063S	2304
2SD1064	2304
2SD1064Q	2304
2SD1064R	2304
2SD1064S	2304
2SD1065	2304
2SD1065-Q	2304
2SD1065-S	2304
2SD1065Q	2304
2SD1065R	2304
2SD1065S	2304
2SD1092	2330
2SD1110	36
2SD1131B	291
2SD1131C	291
2SD1133	291
2SD1133(D)	291
2SD1133D	291
2SD1134	291
2SD1134-C	291
2SD1134C	291
2SD1135	291
2SD1135-5	291
2SD1135C	291
2SD1136	375
2SD1138	375
2SD1138(C)	375
2SD1138(G)	375
2SD1138-02-C	375
2SD1138-02C	375
2SD1138-C	375
2SD1138-D	375
2SD1138-O	375
2SD1138-Y	375
2SD1138B	375
2SD1138C	375
2SD1138D	375
2SD1139B	375
2SD1148	36
2SD1168	238
2SD1171	89
2SD1172	89
2SD1173	89
2SD1175	89
2SD1177C	373
2SD1186	238
2SD1190	263
2SD1192	263
2SD1195	261
2SD1196	263
2SD1197	270
2SD1201	53
2SD1202	53
2SD1204	53
2SD1205	172A
2SD1205(P)	172A
2SD1205(Q)	172A
2SD1205(R)	172A
2SD1205P	172A
2SD1205Q	172A
2SD1205R	172A
2SD1206	16
2SD1206(R)	16
2SD1206(S)	16
2SD1206Q	16
2SD1206R	16
2SD1206S	16
2SD1207S	24
2SD1207SZ	24
2SD1207T	24
2SD1207TZ	24
2SD1208	243
2SD1208 (FA)	243
2SD1208FA	243
2SD1217	2332
2SD1217P	2332
2SD1217Q	2332
2SD1217R	2332
2SD1218	261
2SD1223	2351
2SD1225M	20
2SD1225M(Q)	20
2SD1225M(R)	20
2SD1225MP	20
2SD1225MQ	20
2SD1225MR	20
2SD1226MP	18
2SD1226MQ	18
2SD1226MR	18
2SD1227	20
2SD1227M	20
2SD1227MP	20
2SD1227MQ	20
2SD1227MR	20
2SD1228M	18
2SD1228MP	18
2SD1228MQ	18
2SD1228MR	18
2SD1229	214
2SD1230	215
2SD1235	54
2SD1236	54
2SD1237	54
2SD1237R	54
2SD1244	11
2SD1246-T	11
2SD1246-U	11
2SD1246T	11
2SD1263A	198
2SD1263Q	198
2SD1264	375
2SD1264-D	375
2SD1264A-P	375
2SD1264ALBP	375
2SD1264AP	375
2SD1264APLB	375
2SD1264LBP	375
2SD1264P	375
2SD1264PLB	375
2SD1265	377
2SD1265(LB)0	377
2SD1265(P)	377
2SD1265(Q)	377
2SD1265(QP)	377
2SD1265-0	377
2SD1265-0P	377
2SD1265-0PB	377
2SD1265-LB	377
2SD1265-O	377
2SD1265-OP	377
2SD1265-OPL	377
2SD1265-P	377
2SD1265-Q	377
2SD1265-R	377
2SD1265A	377
2SD1265A-0	377
2SD1265A-P	377
2SD1265A-Q	377
2SD1265LB	377
2SD1265LB-0	377
2SD1265LB-P	377
2SD1265O	377
2SD1265OLB	377
2SD1265OP	377
2SD1265P	377
2SD1265PQ	377
2SD1265Q	377
2SD1266	377
2SD1266(P)	377
2SD1266(Q)	377
2SD1266(R)	377
2SD1266-P	377
2SD1266-PQ	377
2SD1266-Q	377
2SD1266-R	377
2SD1266A	377
2SD1266A(P)	377
2SD1266A(Q)	377
2SD1266A-P	377
2SD1266A-Q	377
2SD1266A-R	377
2SD1266AP	377
2SD1266AQ	377
2SD1266LB	377
2SD1266LB(P)	291
2SD1266LB(Q)	291
2SD1266LBPQ	291
2SD1266LVPQ	377
2SD1266P	377
2SD1266PQ	377
2SD1266Q	377
2SD1266R	377
2SD1267	377
2SD1267A	261
2SD1267AP	261
2SD1267LB	261
2SD1267P	377
2SD1271	54
2SD1271-Q	54
2SD1271-R	54
2SD1271Q	54
2SD1271R	54
2SD1273	56
2SD1273(P)	56
2SD1273(Q)	56
2SD1273LB-0	56
2SD1273LB-P	56
2SD1273P	56
2SD1273Q	56
2SD1274	54
2SD1274B	54
2SD1275	261
2SD1275A	261
2SD1276	261
2SD1276-AP	261
2SD1276-LB	261
2SD1276A	261
2SD1276A(LB)P	261
2SD1276AP	261
2SD1276B	261
2SD1276LB	261
2SD1276P	261
2SD1276PLB	261
2SD1276QLB	261
2SD1277	261
2SD1277B	261
2SD1293	22
2SD1293P	22
2SD1293Q	22
2SD1293R	22
2SD1294	2335
2SD1294(FA)	270
2SD1294FA	2335
2SD1316	2340
2SD1316P	2340
2SD1316Q	2340
2SD1316R	2340
2SD1317	2340
2SD1317P	2340
2SD1317Q	2340
2SD1317R	2340
2SD1318	2340
2SD1318P	2340
2SD1318Q	2340
2SD1318R	2340
2SD1319	2340
2SD1319P	2340
2SD1319Q	2340
2SD1319R	2340
2SD1320	2340
2SD1320P	2340
2SD1320Q	2340
2SD1320R	2340
2SD1321	2340
2SD1321P	2340
2SD1321Q	2340
2SD1321R	2340
2SD1325	2336
2SD1325P	2336
2SD1325Q	2336
2SD1325R	2336
2SD1326	2336
2SD1326P	2336
2SD1326Q	2336
2SD1326R	2336
2SD1327	2336
2SD1327P	2336
2SD1327Q	2336
2SD1327R	2336
2SD1328	2406
2SD1330	13
2SD1330(R)	13
2SD1330(S)	13
2SD1330(T)	13
2SD1330-R	13
2SD1330-RS	13
2SD1330-S	13
2SD1330-T	13
2SD1330R	13
2SD1330S	13
2SD1330T	13
2SD1341	238
2SD1341P	238
2SD1345	377
2SD1347	293
2SD1363-Y	377
2SD1391	2302
2SD1392	2334
2SD1393	2332
2SD1394	2332
2SD1395	2334
2SD1396	2302
2SD1397	2302
2SD1397-OR1-YB	2302
2SD1397B	2302
2SD1398	2302
2SD1398-0R1-YB	2302
2SD1398-CTV-YB	2302
2SD1398-OR1-YB	2302
2SD1398-0RI-YB	2302
2SD1398S	2302
2SD1398S-CA	2302
2SD1399	2302
2SD1406	377
2SD1406-0	377
2SD1406-Y	377
2SD1406-YGR	377
2SD1406GR	377
2SD1406Y	377
2SD1408	291
2SD1408-Y	291
2SD1423	2361
2SD1423A	2361
2SD1423AQ	2361
2SD1423AR	2361
2SD1423AS	2361
2SD1423Q	2361
2SD1423R	2361
2SD1423S	2361
2SD1425	2302
2SD1426	2302
2SD1426FA	2302
2SD1427	2302
2SD1427(FA-1)	2302
2SD1427-LB	2302
2SD1427FA-1	2302
2SD1428	2302
2SD1428FA	2302
2SD1431	2301
2SD1432	2300
2SD1439	2302
2SD1439-Q	2302
2SD1439-Q(LB)	2302
2SD1439-QLB	2302
2SD1439LB	2302
2SD1439P	2302
2SD1439PLB	2302
2SD1439Q	2302
2SD1439R	2302
2SD1439RL	2302
2SD1441	2302
2SD1441(B)	2302
2SD1441-LB	2302
2SD1441LB	2302
2SD1441R	2302
2SD1441RL	2302
2SD1444	377
2SD1451	2302
2SD1452	2302
2SD1453	2302
2SD1453-04	2302
2SD1453-06	2302
2SD1454	2302
2SD1455	2302
2SD1455-04	2302
2SD1455-05	2302
2SD1456	2302
2SD1458	16006
2SD1458(D)	16006
2SD1458(Q)	16006
2SD1458(R)	16006
2SD1459	375
2SD1459D	375
2SD1459Q	375
2SD1459R	375
2SD1475	54
2SD1475(Q)	54
2SD1475(R)	54
2SD1475Q	54
2SD1475R	54
2SD1476	54
2SD1476(Q)	54
2SD1476(R)	54
2SD1476Q	54
2SD1476R	54
2SD1481	2332
2SD1491	2338
2SD1491-K	2338
2SD1491-L	2338
2SD1491-M	2338
2SD1491K	2338
2SD1491L	2338
2SD1491M	2338
2SD1497	2300
2SD1497-06	2300
2SD1510	261
2SD1521	2338
2SD1546	2300
2SD1547	2300
2SD1551	2302
2SD1554	2302
2SD1554-LB	2302
2SD1555	2331
2SD1555(E)	2331
2SD1555-1	2302
2SD1555-LB	2302
2SD1555-LB-S1	2302
2SD1555L(BOEC)	2331
2SD1555LBS1	2302
2SD1556	2302
2SD1556-LB	2302
2SD1556LB	2302
2SD1558	261
2SD1585	291
2SD1585-K	291
2SD1585K	291
2SD1622	291
2SD1641	2330
2SD1647	2332
2SD1647C3	2332
2SD1649	2302
2SD1649-CA	2302
2SD1649-CTV-YB	2302
2SD1650	2302
2SD1650-CTV-YB	2302
2SD1650YD	2302
2SD1651	2331
2SD1651-CTV-TB	2302
2SD1651-CTV-YB	2331
2SD1652	2302
2SD1652-CTV-YB	2302
2SD1653	2324
2SD1654	2324
2SD1655	2324
2SD1656	2324
2SD1663	2324
2SD1666	377
2SD1685	85
2SD1685-PQR	85
2SD1685-R	85
2SD1685P	85
2SD1685Q	85
2SD1685R	85
2SD1685S	85
2SD1685T	85
2SD1735	2324
2SD1736	2324
2SD1737	2324
2SD1738	2324
2SD1739	2324
2SD1776(P)	56
2SD1776(Q)	56
2SD1876	2331
2SD1876-CA	2331
2SD1877	2331
2SD1878	2331
2SD1878-CA	2331
2SD1879	2331
2SD1879-CTV-YB	2331
2SD1879-CTV-YB2331	2331
2SD1882	2324
2SD1883	2324
2SD1884	2324
2SD1885	2324
2SD1886	2324
2SD1886CA	2324
2SD1911	2302
2SD1913-0	152
2SD1913-Q-RA	152
2SD1913-R-RA	152
2SD1913R	152
2SD1941	2300
2SD1941-06	2300
2SD1941-07	2300
2SD1959	2324
2SD1959-02	2324
2SD2023F18E	152
2SD2057	2302
2SD2057LB	2302
2SD2089	2331
2SD2089-LBSONY	2331
2SD2095	2331
2SD2125	2331
2SD2166P	377
2SD2340	152
2SD2350	152
2SD2377	15
2SD2377(D)	15
2SD2653	198
2SD2794	184
2SD7620P	152
2SD7620PLB	152
2SD8800LBGL2	152
2SD12650	377
2SD12650LB	377
2SD12650P	377
2SD12650PQ	377
2SD-348	238
2SD-1283	103A
2SD-1426	2302
2SD-F1	101
2SD-F1A	102A
2SD-F1B	103A
2SD-F1C	103A
2SD-F1D	103A
2SD-F1E	103A
2SD-F1F	103A
2SD-F1G	103A
2SD-F1GN	103A
2SD-F1H	103A
2SD-F1J	103A
2SD-F1K	103A
2SD-F1L	103A
2SD-F1M	103A
2SD-F1OR	103A
2SD-F1R	103A
2SD-F1X	103A
2SD-F1Y	103A
2SDF1	101
2SDF1A	101
2SDF2A	181
2SDF2B	181
2SDF2C	181
2SDF2D	181
2SDF2E	181
2SDF2F	181
2SDF2G	181
2SDF2GN	181
2SDF2H	181
2SDF2J	181
2SDF2K	181
2SDF2L	181
2SDF2M	181
2SDF2OR	181
2SDF2R	181
2SDF2X	181
2SDF2Y	181
2SDL2F	103A
2SDO26	124
2SDU36C	124
2SDU37E	124
2SDU47X	181
2SDU57M	124
2SDU78OR	293
2SDU84GN	128
2SDU90R	103A
2SE629	108
2SE4002	199
2SE4002-1	103A
2SF11	5481
2SF12	5482
2SF13	5492
2SF14	5482
2SF15	5494
2SF16	5484
2SF18	5485
2SF21	5491
2SF22	5491
2SF23	5523
2SF24	5504
2SF25	5525
2SF26	5506
2SF28	5507
2SF31A	5541
2SF32	5522
2SF32A	5522
2SF33	5543
2SF33A	5543
2SF34	5524
2SF34A	5524
2SF35	5544
2SF35A	5544
2SF36	5526
2SF36A	5526
2SF38	5527
2SF38A	5527
2SF41F	312
2SF71	5500
2SF72	5501
2SF73	5502
2SF74	5504
2SF75	5504
2SF76	5506
2SF77	5527
2SF101	5453
2SF102	5454
2SF102A	5454
2SF104	5404
2SF106	5456
2SF108	5457
2SF116A	5465
2SF131	5520
2SF132	5521
2SF133	5522
2SF134	5523
2SF135	5543
2SF136	5526
2SF137	5527
2SF138	5546
2SF139	5528
2SF200	5486
2SF201	5487
2SF205	5496
2SF206	5529
2SF207	5530
2SF210	5528
2SF210A	5528
2SF211	5529
2SF211A	5529
2SF212	5530
2SF212A	5530
2SF216	5529
2SF221	5480
2SF222	5480
2SF223	5482
2SF224	5482
2SF225	5482
2SF226	5484
2SF227	5485
2SF228	5486
2SF229	5403
2SF239	5541
2SF240	5542
2SF241	5543
2SF242	5543
2SF243	5544
2SF244	5544
2SF245	5545
2SF248	314
2SF248A	314
2SF248T	152
2SF261	5470
2SF261A	5481
2SF262	5482
2SF262A	5482
2SF263	5472
2SF263A	5483
2SF264	5472
2SF264A	5483
2SF265	5473
2SF265A	5473
2SF266	5473
2SF266A	5473
2SF267	5474
2SF267A	5474
2SF268	5474
2SF268A	5474
2SF269	5486
2SF269A	5486
2SF271	5491
2SF272	5482
2SF272A	5482
2SF273	5482
2SF274	5492
2SF275	5492
2SF276	5484
2SF277	5494
2SF278	5507
2SF279	5508
2SF281	5521
2SF281A	5521
2SF282	5522
2SF283	5523
2SF284	5524
2SF285	5525
2SF286	5526
2SF287	5527
2SF288	5507
2SF289	5528
2SF291	5521
2SF292	5522
2SF293	5523
2SF294	5524
2SF295	5525
2SF296	5526
2SF297	5527
2SF298	5527
2SF299	5528
2SF321A	5480
2SF322A	5481
2SF323A	5502
2SF324A	5482
2SF325A	5482
2SF326A	5494
2SF327A	5506
2SF328A	5507
2SF329A	5508
2SF330A	5496
2SF357	5454
2SF433	5530
2SF438	5530
2SF441	5463
2SF442	5463
2SF448	5487
2SF449	5530
2SF451	5496
2SF452	5531
2SF454	5529
2SF455	5531
2SF457	5529
2SF458	5531
2SF460	5542
2SF461	5543
2SF462	5544
2SF463	5527
2SF464	5528
2SF521	5401
2SF522	5454
2SF523	5404
2SF528	5461
2SF529	5462
2SF530	5463
2SF531	5466
2SF532	5465
2SF632	5587
2SF633	5587
2SF634	5587
2SF635	5587
2SF636	5587
2SF656	5402
2SF656ZS	5402
2SF657	5403
2SF658	5404
2SF660	5470
2SF661	5471
2SF662	5472
2SF664	5402
2SF664S	5402
2SF665	5470
2SF666	5471
2SF667	5472
2SF668	5474
2SF674S	5402
2SF676S	5402
2SF711	5522
2SF713	5526
2SF714	5507
2SF717	5531
2SF721	5542
2SF722	5543
2SF724	5545
2SF725	5546
2SF726	5547
2SF727	5531
2SF732	5543
2SF733	5544
2SF734	5545
2SF752	5504
2SF752A	5504
2SF755	5528
2SF762	5524
2SF762A	5524
2SF940	5463
2SF941	5454
2SF942	5455
2SF1060	5463
2SF1110	5401
2SF1112	5404
2SF1115	5461
2SF1116	5462
2SF1117	5463
2SF1118	5465
2SF1142	5587
2SF1143	5587
2SF1144	5587
2SF1145	5587
2SF1146	5587
2SF1168	230
2SF1168A	230
2SF1188	230
2SF1188A	230
2SF1188B	230
2SF1188C	230
2SF1188D	230
2SF1188E	230
2SF1188F	230
2SF1188G	230
2SF1188H	230
2SF1188K	230
2SF1188L	230
2SF1188M	230
2SF1188N	230
2SF1188R	230
2SF1188Y	230
2SF1189	230
2SF1189A	230
2SF1189C	230
2SF1189D	230
2SF1189E	230
2SF1189F	230
2SF1189G	230
2SF1189H	230
2SF1189K	230
2SF1189L	230
2SF1189M	230
2SF1189N	230
2SF1189R	230
2SF1189Y	230
2SF1418C	5463
2SF1418D	5466
2SF1418E	5465
2SF1419	5465
2SF1420	5465

PART NUMBER	NTE REPLACEMENT
2SF1420D	230
2SF1420E	5465
2SF1420F	5465
2SF1421	5465
2SF1422	230
2SF1422A	5462
2SF1422B	5463
2SF1422C	230
2SF1422D	5465
2SF1427-100	5454
2SF1427-200	5455
2SF1427-300	5456
2SF1428-200	5463
2SF1428-400	5465
2SF.T212	104
2SFT212	121
2SG536GN	123AP
2SH11	6401
2SH12	6400
2SH18	6401
2SH18K	6401
2SH18L	6401
2SH18M	6401
2SH18N	6401
2SH19	6401
2SH19K	6401
2SH19L	6401
2SH19M	6401
2SH19N	6401
2SH20	6401
2SH21	6400
2SH22	6409
2SH203	100
2SH460	105
2SH643	193
2SH678	106
2SJ2A	116
2SJ4A	116
2SJ8A	125
2SJ11	133
2SJ12	133
2SJ60A	116
2SK2SET	133
2SK11	132
2SK11-O	132
2SK11-R	132
2SK11-Y	132
2SK12	132
2SK12-GR	132
2SK12-O	132
2SK12-R	132
2SK12-Y	132
2SK13	132
2SK15-GR	132
2SK15-O	132
2SK15-R	132
2SK15-Y	132
2SK16	312
2SK16H	312
2SK16HB	312
2SK16HC	312
2SK17	132
2SK17(0)	133
2SK17-0	132
2SK17-0R	133
2SK17A	132
2SK17B	132
2SK17BL	132
2SK17GR	132
2SK17R	132
2SK17Y	132
2SK19	453
2SK19(BL)	453
2SK19(GR)	453
2SK19-14	453
2SK19-BL	453
2SK19-GR	453
2SK19-Y	453
2SK19A	453
2SK19B	453
2SK19BB	453
2SK19BL	453
2SK19FET	453
2SK19GB	453
2SK19GC	453
2SK19GE	453
2SK19GR	453
2SK19H	453
2SK19K	453
2SK19TM	453
2SK19TM-BL	453
2SK19TM-GR	453
2SK19TM-Y	453
2SK19V	453
2SK19Y	453
2SK22Y	132
2SK23	312
2SK23A	312
2SK23A540	312
2SK23AL(SGD)	312
2SK23G	312
2SK24	133
2SK24C	133
2SK24D	133
2SK24DR	133
2SK24E	133
2SK24F	133
2SK24G	133
2SK25	132
2SK25C	132
2SK25D	132
2SK25E	132
2SK25ET	132
2SK25F	132
2SK25G	132
2SK30	132
2SK30(0)	132
2SK30-0	132
2SK30-0	132
2SK30-R	132
2SK30-Y	132
2SK30A	459
2SK30A(D)	132
2SK30A(G)	459
2SK30A(GR)	459
2SK30A-1	459
2SK30A-GR(SGD)	459
2SK30A-TM	459
2SK30A-Y	132
2SK30AD	132
2SK30AG	459
2SK30AG(SGD)	459
2SK30AGR	459
2SK30AO	459
2SK30ATM	459
2SK30ATM(0)	459
2SK30ATM(SGD)	459
2SK30ATM(Y)	459
2SK30ATM-0	459
2SK30ATM-Y	459
2SK30ATMFA-1	459
2SK30ATMFA1	459
2SK30ATMGR	459
2SK30ATMO	459
2SK30ATMO(SGD)	459
2SK30ATMR(SGD)	459
2SK30ATMY(SGD)	459
2SK30ATNGR(SGD)	459
2SK30AY	459
2SK30D	132
2SK30G	459
2SK30GM	459
2SK30GR	459
2SK30R	132
2SK30Y	132
2SK31	132
2SK31(C)	312
2SK31C	132
2SK32B	132
2SK33	312
2SK33(E)	312
2SK33D	312
2SK33E	312
2SK33F	312
2SK33GR	312
2SK33H	312
2SK34	312
2SK34(C)	132
2SK34(E)	312
2SK34-D	312
2SK34A	312
2SK34B	312
2SK34C	312
2SK34D	312
2SK34E	312
2SK35	133
2SK35(SGD)	451
2SK35-0	133
2SK35-0(SGD)	451
2SK35-1	133
2SK35-1(SGD)	451
2SK35-2	133
2SK35-2(SGD)	451
2SK35A	133
2SK35A(SGD)	451
2SK35BL	133
2SK35BL(SGD)	451
2SK35C	133
2SK35C(SGD)	451
2SK35GN	133
2SK35GN(SGD)	451
2SK35R	133
2SK35R(SGD)	451
2SK35Y	133
2SK35Y(SGD)	451
2SK37	132
2SK37(K)	312
2SK37H	132
2SK37K	132
2SK37L	132
2SK39	222
2SK39B	222
2SK39P	221
2SK39Q	133
2SK40	451
2SK40(C)	451
2SK40(D)	451
2SK40-3	133
2SK40A	133
2SK40B	133
2SK40C	451
2SK40D	133
2SK41	312
2SK41D	312
2SK41D2	451
2SK41E	312
2SK41E1	312
2SK41E2	312
2SK41F	312
2SK41L(GSD)	451
2SK41M(GSD)	451
2SK42	132
2SK42-2	312
2SK42-CM1	132
2SK42-CMI	312
2SK42CM1	132
2SK43	312
2SK43-2	312
2SK43-3	312
2SK43-4	312
2SK43-OR	133
2SK43A	133
2SK43B	133
2SK43C	133
2SK43D	133
2SK43E	133
2SK43F	133
2SK43GN	133
2SK43H	133
2SK43J	133
2SK43K	133
2SK43L	133
2SK43M	133
2SK43OR	133
2SK43R	133
2SK43X	133
2SK43Y	133
2SK44	133
2SK44(D)	133
2SK44C	133
2SK44D	133
2SK45	456
2SK45F	456
2SK45H	456
2SK46(SGD)	457
2SK46B(SGD)	457
2SK46C(SGD)	457
2SK47	132
2SK47M	132
2SK49	312
2SK49E2	312
2SK49F	312
2SK49H	312
2SK49H1	312
2SK49H2	312
2SK49HK	312
2SK49I	312
2SK49M	312
2SK54	312
2SK54C	451
2SK54C(GSD)	451
2SK55	312
2SK55C	312
2SK55D	312
2SK55DE	312
2SK55E	312
2SK55R	312
2SK61	312
2SK61GR	312
2SK61Y	312
2SK66R(SGD)	459
2SK68	458
2SK68-L	458
2SK68A	458
2SK68AK	458
2SK68AL	458
2SK68AM	458
2SK68AN	458
2SK68K	458
2SK68L	458
2SK68M	458
2SK68N	458
2SK68Q	458
2SK68Y	458
2SK72	461
2SK72GR	461
2SK720	461
2SK72Y	461
2SK83	312
2SK84	312
2SK84Q(DGS)	459
2SK84R(DGS)	459
2SK87	459
2SK87C	459
2SK87D	459
2SK87H	459
2SK104	312
2SK104E	312
2SK104EF	312
2SK104H	312
2SK104J	312
2SK105	459
2SK105(DGS)	459
2SK105(E)	459
2SK105(F)	459
2SK105A	459
2SK105A-10	459
2SK105A-30	459
2SK105E	459
2SK105F	459
2SK105F(DGS)	459
2SK105H(DGS)	459
2SK105J(DGS)	459
2SK106	133
2SK107	451
2SK107-2(SGD)	451
2SK107-3	451
2SK107-3(SGD)	451
2SK107-5(SGD)	451
2SK117	458
2SK117-BL	458
2SK117-GR	458
2SK117-GRFA-2	458
2SK117-Y	458
2SK117BK	459
2SK117BL	459
2SK117GR	458
2SK117Y	458
2SK118	458
2SK118-0	458
2SK118-R	458
2SK118Q	458
2SK118R	458
2SK119(SGD)	312
2SK120(GSD)	451
2SK120-2(GSD	451
2SK121-2	458
2SK141	466
2SK141A	466
2SK148(DGS)	312
2SK152	312
2SK152-1	312
2SK152-2	312
2SK152-3	312
2SK152LA	312
2SK161	456
2SK161GR	451
2SK161Y	451
2SK168	312
2SK168E	312
2SK168F	312
2SK170	132
2SK170R	132
2SK170V	312
2SK186E	459
2SK192	453
2SK192(DSG)	312
2SK192BL	453
2SK192GR	453
2SK192GR(DSG)	312
2SK192Y	453
2SK192Y(DSG)	312
2SK194	132
2SK195H	451
2SK196R	132
2SK197	132
2SK212	451
2SK212A	451
2SK212AE	451
2SK212E	451
2SK301QR	459
2SK304	132
2SK351	2384
2SK381-E	458
2SK491	133
2SK554	2385
2SK555	2385
2SK903	2387
2SK904	2387
2SK950	2385
2SK1033B	312
2SK1521A	312
2SM73	5675
2SM74	5675
2SM153-200	5633
2SM153-300	5634
2SM153-400	5635
2SM153-500	5636
2SM153-600	5637
2SM154-200	5633
2SM154-300	5634
2SM154-400	5635
2SM154-500	5636
2SM154-600	5637
2SM165-200	5633
2SM165-400	5635
2SM166-200	5633
2SM166-400	5635
2SM610B	159
2SN3841	159
2SO12	152
2SO14	161
2SO17	224
2SO18	224
2SO20	224
2SO33	130
2SO34	130
2SO35	130
2SO36	130
2SO95A	123AP
2SO02	194
2SP405	128
2SQ371	108
2SR1K	116
2SR24	133
2SR54	128
2SR68AM	312
2SR173	128
2SR677	193
2SS184TE85L	595
2ST-2SA733Q/R(AU)E	290A
2SV341V	127
2SVB	5312
2SVB20	5313
2SX1318RS	289A
2SXC2021MRS	16
2T2P	102
2T3	102A
2T11	158
2T12	158
2T13	158
2T14	158
2T14A	126
2T15	158
2T15X3	107
2T16	158
2T17	158
2T20	160
2T21	158
2T22	158
2T23	158
2T24	158
2T25	158
2T26	158
2T40	123AP
2T41	123AP
2T42	123AP
2T43	123AP
2T44	123AP
2T51	103
2T52	101
2T53	101
2T54	101
2T55	101
2T56	101
2T57	101
2T58	101
2T61	103
2T62	103
2T63	103
2T64	103
2T64R	103
2T65	103
2T65R	103
2T66	103
2T66R	103
2T67	101
2T69	103
2T71	101
2T72	101
2T73	101
2T73R	101
2T74	101
2T75	101
2T75R	101
2T76	101
2T76R	101
2T77	101
2T77R	101
2T78	101
2T78R	101
2T82	101
2T83	101
2T84	103
2T85	103
2T85A	103
2T86	103
2T89	103
2T172	123AP
2T201	160
2T202	123AP
2T203	160
2T204	160
2T204A	160
2T205	160
2T205A	160
2T230	102
2T231	102
2T311	158
2T312	158
2T313	158
2T314	158
2T315	158
2T321	158
2T322	158
2T323	158
2T324	158
2T383	158
2T402	123
2T403	123AP
2T404	123AP
2T501	116
2T502	116
2T503	116
2T504	116
2T505	116
2T506	116
2T507	125
2T508	125
2T509	125
2T510	125
2T513	101
2T520	101
2T521	101
2T522	103
2T523	103
2T524	101
2T551	101
2T552	103
2T650	101
2T681	103
2T682	103
2T918	123AP
2T919	107
2T2001	102
2T2102	192
2T2708	123AP
2T2785	123AP
2T2857	123AP
2T3011	121
2T3021	121
2T3022	121
2T3030	121
2T3031	121
2T3032	121
2T3033	121
2T3041	121
2T3042	121
2T3043	121
2TN15	100
2TN32	100
2TN45A	102
2TN48	100
2TN49	100
2TN52	100
2TN53	100
2TN56	102
2TN95	102
2TN95A	102
2V362	102
2V363	102
2V464	100
2V465	100
2V466	100
2V467	100
2V482	100
2V483	100
2V484	100
2V485	160
2V486	100
2V559	160
2V560	160
2V561	160
2V562	160
2V563	160
2V631	100
2V632	100
2V633	100
2VD-2D	552
2VR5.6	5117A
2VR5.6A	5117A
2VR5.6B	5117A
2VR6	5118A
2VR6.2	5118A
2VR6.2A	5118A
2VR6.2B	5118A
2VR6.8	5120A
2VR6.8A	5120A
2VR6.8B	5120A
2VR6A	5118A
2VR6B	5118A
2VR7.5	5121A
2VR7.5A	5121A
2VR7.5B	5121A
2VR8.2	5122A
2VR8.2A	5122A
2VR8.2B	5122A
2VR8.5	5123A
2VR8.5A	5123A
2VR8.5B	5123A
2VR9.1	5124A
2VR9.1A	5124A
2VR9.1B	5124A
2VR10	5125A
2VR10A	5125A
2VR10B	5125A
2VR11	5126A
2VR11A	5126A
2VR11B	5126A
2VR12	5127A
2VR12A	5127A
2VR12B	5127A
2VR13	5128A
2VR13A	5128A
2VR13R	5128A
2VR14	5129A
2VR14A	5129A
2VR14B	5129A
2VR15	5130A
2VR15A	5130A
2VR15B	5130A
2VR16	5131A
2VR16A	5131A
2VR16B	5131A
2VR18	5133A
2VR18A	5133A
2VR18B	5133A
2VR20	5135A
2VR20A	5135A
2VR20B	5135A
2VR22	5136A
2VR22A	5136A
2VR22B	5136A
2VR24	5137A
2VR24A	5137A
2VR24B	5137A
2VR27	5139A
2VR27A	5139A
2VR27B	5139A
2VR28	5140A
2VR28A	5140A
2VR28B	5140A
2VR30	5141A
2VR30A	5141A
2VR30B	5141A
2VR33	5142A
2VR33A	5142A
2VR33B	5142A
2VR36	5143A
2VR36A	5143A
2VR36B	5143A
2VR39	5144A
2VR39A	5144A
2VR39B	5144A
2VR43	5145A
2VR43A	5145A
2VR43B	5145A
2VR47	5146A
2VR47A	5146A
2VR47B	5146A
2VR51	5147A
2VR51A	5147A
2VR51B	5147A
2VR56	5148A
2VR56A	5148A
2VR56B	5148A
2VR62	5150A
2VR62A	5150A
2VR62B	5150A
2VR67	5151A
2VR67A	5151A
2VR67B	5151A
2VR68	5151A
2VR68A	5151A
2VR68B	5151A
2VR75	5152A
2VR75A	5152A
2VR75B	5152A
2VR80	5153A
2VR80A	5153A
2VR80B	5153A
2VR82	5153A
2VR82A	5153A
2VR82B	5153A
2VR90	5155A
2VR90A	5155A
2VR90B	5155A
2VR91	5155A
2VR91A	5155A
2VR91B	5155A
2VR100	5156A
2VR100A	5156A
2VR100B	5156A
2VR110	5157A
2VR110A	5157A
2VR110B	5157A
2VR120	5158A
2VR120A	5158A
2VR120B	5158A
2VR130	5159A
2VR130A	5159A
2VR130B	5159A
2VR150	5161A
2VR150A	5161A
2VR150B	5161A
2VR160	5162A
2VR160A	5162A
2VR160B	5162A
2VR180	5164A
2VR180A	5164A
2VR180B	5164A
2VR200	5166A
2VR200A	5166A
2VR200B	5166A
2W005	5304
2W02	5304
2W04	5304
2W06	5305
2W08	5306
2W3A	116
2W4A	116
2W5A	116
2W6A	125
2W7A	125
2W9A	125
2WMT1	5942
2WMT2	5945
2WMT4	5948
2WMT6	5952
2WMT8	5998
2WMT10	6002
2X9A116	116
2XAA111	109
2XAA112	109
2XAA113	109
3.0B2	5004A
3.3B1	5005A
3.3B1(ZENER)	5005A
3.3Y	5005A
3.6B	5006A
3.6B1	134A
3.6B1(ZENER 1)	134A
3.6EB1	5006A
3.6L1	5006A
3.6N1	5006A
3.9B2	5007A
3.9N2(ZENER)	5007A
3.9Y	5007A
3.9Y(ZENER)	5007A
3-0033	123AP
3-041	129
3-7	129
3-19	124
3-20	127
3-215	129
3-233	197
3-1477	5804
3-30173	181
3-3017148-2	5465
3/4T12D5	142A
3/4Z12D5	142A
3/4Z12D10	142A
3A1	156
3A3	508
3A15	5800
3A30	5800
3A90	109
3A100	156
3A152	116
3A154	116
3A156	116
3A158	125
3A200	116
3A252	116
3A254	116
3A256	116
3A258	125
3A300	5803
3A500	5805
3A1000	156
3A1510	125
3A2510	125
3A-200	125
3A-MDA-3500	5340
3A-MDA-3501	5340
3AA00-17400	261
3AF2	156
3AF4	5803

PART NUMBER	NTE REPLACEMENT
3AF6	5806
3AF8	5808
3AS1	116
3AS2	116
3AT2	509
3AW2	509
3AW3	508
3B2	508
3B3.A	5312
3B3.C	5312
3B4.1	5312
3B4B1	5312
3B4B41	5312
3B15	102
3B15-1	102
3BB-20B01	166
3BB-20801	116
3BL2	509
3BM2	509
3BN2	509
3BS1	116
3BS2	116
3BZ61	156
3BZ-61	156
3C05	5830
3C05R	5831
3C1	5982
3C2	5986
3C4	5990
3C6	5994
3C6RH	5859
3C8	5998
3C10	6002
3C10(SYL)	5834
3C10R	5833
3C15	5834
3C15R	5835
3C20	5834
3C20R	5835
3C30	5836
3C30R	5837
3C38(TRANS)	108
3C40	5838
3C40R	5839
3C50	5840
3C50R	5841
3C60	5842
3C60R	5843
3C70	5846
3C70R	5847
3C80	5846
3C80R	5847
3C90	5848
3C90R	5849
3C100	5848
3C100R	5849
3C6030	5400
3C6100	5454
3CA3	508
3CC12	5916
3CC13	5916
3CD12	5916
3CD13	5916
3CG0R	5843
3CG0R	5843
3CN3	508
3CS1	116
3CS2	116
3CU3	508
3D1.E	5312
3D-702	5081A
3DC12	5916
3DC13	5916
3DD12	5916
3DL2	552
3DL4C	116
3DS1	116
3DS2	116
3DS3	156
3DZ61	156
3E05	5800
3E1(DIODE)	5801
3E2	5802
3E6	5806
3E8	5808
3E10	5809
3E-1	123AP
3E-2	123AP
3E-3	123AP
3E-4	109
3E-27	102A
3E-28	158
3E-29	158
3E-64	116
3E-65	116
3ES1	116
3ES2	116
3F5	5830
3F5-D	5830
3F5D	5874
3F10	5832
3F10D	5832
3F10D-C	5832
3F15	5834
3F20	5834
3F20D	5834
3F20D-C	5834
3F30	5836
3F30(SCR)	5400
3F30D	5836
3F40	5835
3F40D	5838
3F40D-C	5838
3F50	5840
3F50D	5840
3F60	5842
3F60(SCR)	5401
3F60D	5842
3F80	5846
3F80D	5846
3F100	5848
3F100(SCR)	5402
3F100D	5848
3F150(SCR)	5403
3F200(SCR)	5404
3FC12	5920
3FC13	5920
3FD12	5920
3FD13	5920
3FR5	5831
3FR10	5833
3FR15	5835
3FR20	5835
3FR30	5837
3FR40	5839
3FR50	5841
3FR60	5843
3FR80	5847
3FR100	5849
3FS1	116
3FS2	116
3G2	132
3G8	116
3G152	116
3G154	116
3G156	116
3G158	125
3G252	116
3G254	116
3G256	116
3G258	125
3G1510	125
3G2510	125
3GA	116
3GC12	5838
3GD12	5920
3GS1	116
3GS2	116
3H82-00020-000	966
3H84-00040-004	376
3HS1	116
3HS2	116
3J15	5400
3J30	5400
3J60	5401
3J100	5402
3JC12	5842
3JH61	552
3JH61(FA2)	552
3JH61(FA-2)	552
3JH61-FA-2	552
3JH61FA2	552
3JH61FA-2	552
3JH-61	552
3JZ61	5806
3K15	5400
3L4-2001	109
3L4-2001-3	177
3L4-2001-1A	109
3L4-2001-1	109
3L4-2001-4	177
3L4-2003-3	177
3L4-2003-1	109
3L4-2003-4	109
3L4-3001-8	116
3L4-3001-7	177
3L4-3001-1	177
3L4-3001-5	116
3L4-3002-01	519
3L4-3002-7	177
3L4-3002-32	177
3L4-3002-25	177
3L4-3002-31	177
3L4-3002-13	116
3L4-3002-10	177
3L4-3503-5	614
3L4-3503-6	614
3L4-3503-1	614
3L4-3505-1	5072A
3L4-3505-3	138A
3L4-3505-4	5074A
3L4-3505-2	5071A
3L4-3506-3	138A
3L4-3506-2	5130A
3L4-3506-7	5072A
3L4-3506-21	136A
3L4-3506-29	145A
3L4-3506-31	135A
3L4-3506-12	5071A
3L4-3506-40	5075A
3L4-5007-3	123AP
3L4-6001-01	130
3L4-6004	175
3L4-6005-5	152
3L4-6005-2	184
3L4-6005-1	152
3L4-6005-3	184
3L4-6005-55	152
3L4-6006-1	124
3L4-6007-02	123AP
3L4-6007-08	123AP
3L4-6007-09	123AP
3L4-6007-04	123AP
3L4-6007-03	123AP
3L4-6007-2	123AP
3L4-6007-4	128
3L4-6007-3	123AP
3L4-6007-1	123AP
3L4-6007-20	161
3L4-6007-38	123AP
3L4-6007-34	159
3L4-6007-10	161
3L4-6007-51	108
3L4-6007-15	199
3L4-6007-35	107
3L4-6007-11	161
3L4-6007-12	161
3L4-6007-14	161
3L4-6007-21	107
3L4-6007-19	161
3L4-6007-22	161
3L4-6007-41	192
3L4-6007-13	161
3L4-6007-17	107
3L4-6007-16	199
3L4-6007-23	107
3L4-6007-37	123AP
3L4-6007-I7	107
3L4-6010-03	123AP
3L4-6010-4	129
3L4-6010-8	159
3L4-6010-6	123AP
3L4-6010-3	123AP
3L4-6011-02	129
3L4-6011-1	196
3L4-6011-3	211
3L4-6011-9	153
3L4-6011-2	211
3L4-6011-11	153
3L4-6011-14	153
3L4-6011-12	153
3L4-6011-52	211
3L4-6011-53	211
3L4-6012-06	196
3L4-6012-02	152
3L4-6012-3	152
3L4-6012-5	196
3L4-6012-2	152
3L4-6012-6	196
3L4-6012-4	182
3L4-6012-8	196
3L4-6012-58	196
3L4-6012-55	196
3L4-6012-56	196
3L4-6013-02	153
3L4-6013-2	153
3L4-6013-5	153
3L4-6013-4	183
3L4-6013-3	153
3L4-6013-6	197
3L4-6013-8	197
3L4-6013-55	153
3L4-6013-58	153
3L4-6013-15	153
3L4-6013-56	153
3L4-6015-01	123AP
3L4-6017-01	159
3L4-6020-01	238
3L4-6021-01	247
3L4-6024-1	269
3L4-6503-1	222
3L4-6503-2	222
3L4-7004-1	6402
3L4-9004-01	743
3L4-9004-4	743
3L4-9004-3	743
3L4-9004-1	743
3L4-9004-51	743
3L4-9006-01	726
3L4-9006-1	726
3L4-9006-51	726
3L4-9007-01	737
3L4-9007-0	723
3L4-9007-1	737
3L4-9007-51	737
3L4-9008-01	789
3L4-9008-51	789
3L4-9013-01	9946
3L4-9020-1	1232
3L4-90201-1	1232
3L1030	5400
3L2015	5400
3L46007-1	123AP
3L46007-2	123AP
3L49007-51	737
3LA-6007-4	192
3LC12	5846
3LZ61	5808
3MA	118
3MC	160
3MS5	116
3MS10	116
3MS20	116
3MS30	116
3MS40	116
3MS50	116
3N21	126
3N22	101
3N23	101
3N23A	101
3N23B	101
3N23C	101
3N25/501	160
3N29	101
3N30	101
3N31	101
3N34	160
3N35	123AP
3N35A	160
3N36	101
3N37	101
3N49	105
3N50	105
3N51	105
3N52	105
3N71	107
3N72	107
3N73	107
3N74	199
3N75	199
3N76	199
3N77	199
3N78	199
3N79	199
3N81	239
3N83	239
3N87	107
3N88	107
3N90	159
3N91	159
3N92	159
3N93	159
3N94	159
3N95	159
3N114	159
3N115	159
3N116	159
3N117	159
3N118	159
3N119	159
3N120	107
3N121	107
3N123	234
3N127	161
3N129	159
3N130	159
3N131	159
3N132	159
3N133	159
3N134	159
3N135	159
3N136	159
3N140	221
3N200	222
3N201	454
3N201A	222
3N202	454
3N203	222
3N204	222
3N209	454
3N213	222
3N246	166
3N247	166
3N248	167
3N249	168
3N250	169
3N251	170
3N252	170
3N253	166
3N254	166
3N255	167
3N256	168
3N257	169
3N258	170
3N259	170
3NC12	5848
3P2MH	5409
3P4MH	5457
3R7.5	5121A
3R7.5A	5121A
3R7.5B	5121A
3R8.2	5122A
3R8.2A	5122A
3R8.2B	5122A
3R9.1	5124A
3R9.1A	5124A
3R9.1B	5124A
3R10	5125A
3R10A	5125A
3R10B	5125A
3R11	5126A
3R11A	5126A
3R11B	5126A
3R12	5127A
3R12A	5127A
3R12B	5127A
3R13	5128A
3R13A	5128A
3R13B	5128A
3R15	5130A
3R15A	5130A
3R15B	5130A
3R16	5131A
3R16A	5131A
3R16B	5131A
3R18	5133A
3R18A	5133A
3R18B	5133A
3R20	5135A
3R20A	5135A
3R20B	5135A
3R22	5136A
3R22A	5136A
3R22B	5136A
3R24	5137A
3R24A	5137A
3R24B	5137A
3R27	5139A
3R27A	5139A
3R27B	5139A
3R30	5141A
3R30A	5141A
3R30B	5141A
3R33	5142A
3R33A	5142A
3R33B	5142A
3R35	5143A
3R35A	5143A
3R35B	5143A
3R36	5143A
3R36A	5143A
3R36B	5143A
3R39	5144A
3R39A	5144A
3R39B	5144A
3R43	5145A
3R43A	5145A
3R43B	5145A
3R47	5146A
3R47A	5146A
3R47B	5146A
3R51	5147A
3R51A	5147A
3R51B	5147A
3R56	5148A
3R56A	5148A
3R56B	5148A
3R62	5150A
3R62A	5150A
3R62B	5150A
3R68	5151A
3R68A	5151A
3R68B	5151A
3R75	5152A
3R75A	5152A
3R75B	5152A
3R82	5153A
3R82A	5153A
3R82B	5153A
3R91	5155A
3R91A	5155A
3R91B	5155A
3R100	5156A
3R100A	5156A
3R100B	5157A
3R110	5157A
3R110A	5157A
3R110B	5157A
3R118	5126A
3R120	5158A
3R120A	5158A
3R120B	5158A
3R130	5159A
3R130A	5159A
3R130B	5159A
3R140	5160A
3R140A	5161A
3R140B	5161A
3R150	5161A
3R150A	5161A
3R150B	5161A
3R160	5162A
3R160A	5162A
3R160B	5162A
3R180	5164A
3R180A	5164A
3R180B	5164A
3R200	5166A
3R200A	5166A
3R200B	5166A
3RB8.2B	5122A
3RC2	5470
3RC5	5470
3RC5A	5470
3RC10	5471
3RC10A	5471
3RC15	5472
3RC15A	5472
3RC20	5472
3RC20A	5472
3RC25	5473
3RC30	5473
3RC30A	5473
3RC40	5474
3RC40A	5474
3RC50	5475
3RC50A	5475
3RC60	5476
3RC60A	5476
3RL5A	5470
3RL10A	5471
3RL20A	5472
3RL30A	5473
3RL40A	5474
3RL50A	5475
3RL60A	5476
3S004	123AP
3S05E	5800
3S1E	5806
3S2E	5802
3S3E	5803
3S4/LB1E	5457
3S4E	5804
3S4M	5424
3S4M//LB	5457
3S4M//LB1E	5457
3S4M/LB1E	5457
3S5E	5805
3S6E	5806
3S30B	132
3SA324	160
3SB347	102A
3SB629	116
3SB-B732	116
3SC1358K1	283
3SD313	196
3SD313C	196
3SF11	239
3SF11P	239
3SF11Q	239
3SK3E	222
3SK20	221
3SK20H	221
3SK20HW	221
3SK20HY	221
3SK21	222
3SK21H	222
3SK22	222
3SK22(D,S,G1,G2)	454
3SK22-Y	222
3SK22Y	222
3SK23	132
3SK30	132
3SK30A	132
3SK30B	132
3SK30C	132
3SK32	221
3SK32(B)	222
3SK32A	221
3SK32B	221
3SK32B-6	221
3SK32C	221
3SK32D	221
3SK32E	221
3SK32E-4	221
3SK33	220
3SK34	133
3SK34C	133
3SK35	222
3SK35-BL	222
3SK35-GR	222
3SK35-Y	222
3SK35BL	222
3SK35G	222
3SK37	222
3SK37-2	454
3SK37-3	454
3SK37-0	454
3SK39	221
3SK39E	221
3SK39P	221
3SK39Q	221
3SK39R	221
3SK40	222
3SK40A	454
3SK40B	454
3SK40C	454
3SK40D	454
3SK40I	222
3SK40M	222
3SK41	222
3SK41(L)	222
3SK41C	222
3SK41D	221
3SK41L	222
3SK41M	222
3SK44	222
3SK44BL	222
3SK44R	222
3SK45	454
3SK45-B-09	222
3SK45B	222
3SK45B09	222
3SK47M	454
3SK49	222
3SK49E2	222
3SK49P	222
3SK49Q	222
3SK49R	222
3SK59	222
3SK59BL	222
3SK59GR	222
3SK61	454
3SK87	455
3SK87K	455
3SK87L	455
3SK88	455
3SK88K	455
3SK88L	455
3SK113	455
3SK411	222
3SK-35	222
3SK-39	222
3SM4	5804
3SS4M	5457
3T6.2	5180A
3T6.2A	5180A
3T6.2B	5180A
3T7.5	5182A
3T7.5A	5182A
3T7.5B	5182A
3T9.1	5185A
3T9.1A	5185A
3T9.1B	5185A
3T11	5187A
3T11A	5187A
3T11B	5187A
3T12	5188A
3T12A	5188A
3T12B	5188A
3T13	5189A
3T13B	5189A
3T16	5192A
3T16A	5192A
3T16B	5192A
3T20	5196A
3T20A	5196A
3T20B	5196A
3T24	5198A
3T24A	5198A
3T24B	5198A
3T30A	5202A
3T30B	5202A
3T33	5203A
3T33A	5203A
3T33B	5203A
3T36	5203A
3T36A	5203A
3T39	5205A
3T39A	5205A
3T39B	5205A
3T43	5206A
3T43A	5206A
3T43B	5206A
3T47	5208A
3T47A	5208A
3T47B	5208A
3T51	5210A
3T51A	5210A
3T51B	5210A
3T56	5212A
3T56A	5212A
3T56B	5212A
3T62A	5214A
3T62B	5214A
3T68	5215A
3T68B	5215A
3T75	5216A
3T75A	5216A
3T75B	5216A
3T82	5217A
3T82A	5217A
3T82B	5217A
3T91	5219A
3T100	5220A
3T100A	5220A
3T100B	5220A
3T110	5222A
3T110A	5222A
3T110B	5222A
3T120	5223A
3T120A	5223A
3T120B	5223A
3T130	5224A
3T130A	5224A
3T130B	5224A
3T150	5226A
3T150A	5226A
3T150B	5226A
3T160	5227A
3T160A	5227A
3T160B	5227A
3T180	5230A
3T180A	5230A
3T180B	5230A
3T200	5232A
3T200A	5232A
3T200B	5232A
3T201	101
3T202	101
3T203	101
3T501	116
3T502	116
3T503	116
3T504	116
3T505	116
3T506	116
3T507	125
3T508	125
3T509	125
3T510	125
3TCRA	5470
3TCRB	5470
3TCRC	5471
3TCRD	5472
3TCRE	5472
3TCRF	5473
3TCRG	5473
3TCRH	5474
3TCRI	5475
3TCRJ	5476
3TE120	130
3TE140	130
3TE150	192
3TE160	192
3TE220	165
3TE230	130
3TE240	130
3TE250	192
3TE260	192
3TX002	165
3TX003	130
3TX004	130
3TZ3.6	5112A
3TZ3.6A	5112A
3TZ3.6B	5112A
3TZ3.6C	5112A
3TZ3.6D	5112A
3TZ3.9	5113A
3TZ3.9A	5113A
3TZ3.9B	5113A
3TZ3.9C	5113A
3TZ3.9D	5113A
3TZ4.3	5114A
3TZ4.3A	5114A
3TZ4.3B	5114A
3TZ4.3C	5114A
3TZ4.3D	5114A
3TZ4.7	5115A
3TZ4.7A	5115A
3TZ4.7B	5115A
3TZ4.7C	5115A
3TZ4.7D	5115A
3TZ5.1	5116A
3TZ5.1A	5116A
3TZ5.1B	5116A
3TZ5.1C	5116A
3TZ5.1D	5116A

PART NUMBER	NTE REPLACEMENT
3TZ5.6	5117A
3TZ5.6A	5117A
3TZ5.6B	5117A
3TZ5.6C	5117A
3TZ5.6D	5117A
3TZ6.2	5119A
3TZ6.2A	5119A
3TZ6.2B	5119A
3TZ6.2C	5119A
3TZ6.2D	5119A
3TZ6.8	5120A
3TZ6.8A	5120A
3TZ6.8B	5120A
3TZ6.8C	5120A
3TZ6.8D	5120A
3TZ7.5	5121A
3TZ7.5A	5121A
3TZ7.5B	5121A
3TZ7.5C	5121A
3TZ7.5D	5121A
3TZ8.2	5122A
3TZ8.2A	5122A
3TZ8.2B	5122A
3TZ8.2C	5122A
3TZ8.2D	5122A
3TZ9.1	5124A
3TZ9.1A	5124A
3TZ9.1B	5124A
3TZ9.1C	5124A
3TZ9.1D	5124A
3TZ10	5125A
3TZ10A	5125A
3TZ10B	5125A
3TZ10C	5125A
3TZ10D	5125A
3TZ11	5126A
3TZ11A	5126A
3TZ11B	5126A
3TZ11C	5126A
3TZ11D	5126A
3TZ12	5127A
3TZ12A	5127A
3TZ12B	5127A
3TZ12C	5127A
3TZ12D	5127A
3TZ13	5128A
3TZ13A	5128A
3TZ13B	5128A
3TZ13C	5128A
3TZ13D	5128A
3TZ14	5129A
3TZ14A	5129A
3TZ14B	5129A
3TZ14C	5129A
3TZ14D	5129A
3TZ15	5130A
3TZ15A	5130A
3TZ15B	5130A
3TZ15C	5130A
3TZ15D	5130A
3TZ16	5131A
3TZ16A	5131A
3TZ16B	5131A
3TZ16C	5131A
3TZ16D	5131A
3TZ17	5132A
3TZ17A	5132A
3TZ17B	5132A
3TZ17C	5132A
3TZ17D	5132A
3TZ18	5133A
3TZ18A	5133A
3TZ18B	5133A
3TZ18C	5133A
3TZ18D	5133A
3TZ19	5136A
3TZ19A	5134A
3TZ19B	5136A
3TZ19C	5134A
3TZ19D	5134A
3TZ20	5135A
3TZ20A	5135A
3TZ20B	5135A
3TZ20C	5135A
3TZ20D	5135A
3TZ22	5136A
3TZ22A	5136A
3TZ22B	5136A
3TZ22C	5136A
3TZ22D	5136A
3TZ24	5137A
3TZ24A	5137A
3TZ24B	5137A
3TZ24C	5137A
3TZ24D	5137A
3TZ27	5139A
3TZ27A	5139A
3TZ27B	5139A
3TZ27C	5139A
3TZ27D	5139A
3TZ30	5141A
3TZ30A	5141A
3TZ30B	5141A
3TZ30C	5141A
3TZ30D	5141A
3TZ33	5142A
3TZ33A	5142A
3TZ33B	5142A
3TZ33C	5142A
3TZ33D	5142A
3TZ36	5143A
3TZ36A	5143A
3TZ36B	5143A
3TZ36C	5143A

PART NUMBER	NTE REPLACEMENT
3TZ36D	5143A
3TZ39	5144A
3TZ39A	5144A
3TZ39B	5144A
3TZ39C	5144A
3TZ39D	5144A
3TZ43	5145A
3TZ43A	5145A
3TZ43B	5145A
3TZ43C	5145A
3TZ43D	5145A
3TZ47	5146A
3TZ47A	5146A
3TZ47B	5146A
3TZ47C	5146A
3TZ47D	5146A
3TZ50	5147A
3TZ50A	5147A
3TZ50B	5147A
3TZ50C	5147A
3TZ50D	5147A
3TZ51	5147A
3TZ51A	5147A
3TZ51B	5147A
3TZ51C	5147A
3TZ51D	5147A
3TZ56	5148A
3TZ56A	5148A
3TZ56B	5148A
3TZ56C	5148A
3TZ56D	5148A
3TZ62	5150A
3TZ62A	5150A
3TZ62B	5150A
3TZ62C	5150A
3TZ62D	5150A
3TZ68	5151A
3TZ68A	5151A
3TZ68B	5151A
3TZ68C	5151A
3TZ68D	5151A
3TZ75	5152A
3TZ75A	5152A
3TZ75B	5152A
3TZ75C	5152A
3TZ75D	5152A
3TZ82	5153A
3TZ82A	5153A
3TZ82B	5153A
3TZ82C	5153A
3TZ82D	5153A
3TZ91	5155A
3TZ91A	5155A
3TZ91B	5155A
3TZ91C	5155A
3TZ91D	5155A
3TZ100	5156A
3TZ100A	5156A
3TZ100B	5156A
3TZ100C	5156A
3TZ100D	5156A
3TZ110	5157A
3TZ110A	5157A
3TZ110B	5157A
3TZ110C	5157A
3TZ110D	5157A
3TZ120	5158A
3TZ120A	5158A
3TZ120B	5158A
3TZ120C	5158A
3TZ120D	5158A
3TZ130	5159A
3TZ130A	5159A
3TZ130B	5159A
3TZ130C	5159A
3TZ130D	5159A
3TZ140	5160A
3TZ140A	5160A
3TZ140B	5160A
3TZ140C	5160A
3TZ140D	5160A
3TZ150	5161A
3TZ150A	5161A
3TZ150B	5161A
3TZ150C	5161A
3TZ150D	5161A
3TZ160	5162A
3TZ160A	5162A
3TZ160B	5162A
3TZ160C	5162A
3TZ160D	5162A
3TZ180	5164A
3TZ180A	5164A
3TZ180B	5164A
3TZ180C	5164A
3TZ180D	5164A
3TZ200	5166A
3TZ200A	5166A
3TZ200B	5166A
3TZ200C	5166A
3TZ200D	5166A
3VR5.6	5117A
3VR5.6A	5117A
3VR5.6B	5117A
3VR6	5118A
3VR6.2	5119A
3VR6.2A	5119A
3VR6.2B	5119A
3VR6.8	5120A
3VR6.8A	5120A
3VR6.8B	5120A
3VR6A	5118A
3VR6B	5118A
3VR7.5	5121A

PART NUMBER	NTE REPLACEMENT
3VR7.5A	5121A
3VR7.5B	5121A
3VR8.2	5122A
3VR8.2A	5122A
3VR8.2B	5122A
3VR8.5	5123A
3VR8.5A	5123A
3VR8.5B	5123A
3VR9.1	5124A
3VR9.1A	5124A
3VR9.1B	5124A
3VR10	5125A
3VR10A	5125A
3VR10B	5125A
3VR11	5126A
3VR11A	5126A
3VR11B	5126A
3VR12	5127A
3VR12A	5127A
3VR12B	5127A
3VR13	5128A
3VR13A	5128A
3VR13B	5128A
3VR15	5130A
3VR15A	5130A
3VR15B	5130A
3VR16	5131A
3VR16A	5131A
3VR16B	5131A
3VR18	5133A
3VR18A	5133A
3VR18B	5133A
3VR20	5135A
3VR20A	5135A
3VR20B	5135A
3VR22	5136A
3VR22A	5136A
3VR22B	5136A
3VR24	5137A
3VR24A	5137A
3VR24B	5137A
3VR27	5139A
3VR27A	5139A
3VR27B	5139A
3VR30	5141A
3VR30A	5141A
3VR30B	5141A
3VR33	5142A
3VR33A	5142A
3VR33B	5142A
3VR36	5143A
3VR36A	5143A
3VR36B	5143A
3VR39	5144A
3VR39A	5144A
3VR39B	5144A
3VR43	5145A
3VR43A	5145A
3VR43B	5145A
3VR47	5131A
3VR47A	5131A
3VR47B	5131A
3VR51	5147A
3VR51A	5147A
3VR51B	5147A
3VR56	5148A
3VR56A	5148A
3VR56B	5148A
3VR62	5150A
3VR62A	5150A
3VR62B	5150A
3VR67	5151A
3VR67A	5151A
3VR67B	5151A
3VR68	5151A
3VR68A	5151A
3VR68B	5151A
3VR75	5152A
3VR75A	5152A
3VR75B	5152A
3VR82	5153A
3VR82A	5153A
3VR82B	5153A
3VR90	5155A
3VR90A	5155A
3VR90B	5155A
3VR91	5155A
3VR91A	5155A
3VR91B	5155A
3VR100	5156A
3VR100A	5156A
3VR100B	5156A
3VR110	5157A
3VR110A	5157A
3VR110B	5157A
3VR120	5158A
3VR120A	5158A
3VR120B	5158A
3VR130	5159A
3VR130A	5159A
3VR130B	5159A
3VR150	5161A
3VR150A	5161A
3VR150B	5161A
3VR160	5162A
3VR160A	5162A
3VR160B	5162A
3VR180	5164A
3VR180A	5164A
3VR180B	5164A
3VR200	5166A
3VR200A	5166A
3VR200B	5166A
3WB-5A	5176A

PART NUMBER	NTE REPLACEMENT
3WB-6A	5178A
3WB-7A	5181A
3WB-9D	5183A
3WB-11D	5186A
3WB-13	5128A
3WB-13D	5188A
3WB-15D	5130A
3WB-17D	5194A
3WB-25D	5138A
3WB-30D	5203A
3WB-55D	5212A
3WB-85D	5217A
3WB-100D	5220A
3WB-120D	5223A
3WC-13D	5128A
3WC-15D	5130A
3WC-25D	5138A
3X11/1	116
3Z3.9M	5174A
3Z3.9T10	5174A
3Z3.9T20	5174A
3Z4.3T5	5175A
3Z4.3T10	5175A
3Z4.3T20	5175A
3Z4.7M	5176A
3Z4.7T20	5176AK
3Z4.7T10	5176AK
3Z5.1T5	5177A
3Z5.1T10	5177A
3Z5.1T20	5177A
3Z5.6M	5198A
3Z5.6T5	5178A
3Z5.6T10	5178A
3Z5.6T20	5178A
3Z6.2T5	5180A
3Z6.2T20	5180A
3Z6.2T10	5180A
3Z6.8	5120A
3Z6.8A	5120A
3Z6.8B	5120A
3Z6.8M	5181A
3Z6.8T5	5181A
3Z6.8T10	5181A
3Z6.8T20	5181A
3Z7.5T5	5182A
3Z7.5T10	5182A
3Z7.5T20	5182A
3Z8.2M	5183A
3Z8.2T5	5183A
3Z8.2T20	5183A
3Z8.2T10	5183A
3Z9.0	5124A
3Z9.0A	5124A
3Z9.0B	5124A
3Z9.1T5	5185A
3Z9.1T10	5185A
3Z9.1T20	5185A
3Z10M	5186A
3Z10T5	5186A
3Z10T10	5186A
3Z10T20	5186A
3Z11T5	5187A
3Z11T10	5187A
3Z11T20	5187A
3Z12	5127A
3Z12A	5127A
3Z12B	5127A
3Z12M	5188A
3Z12T5	5188A
3Z12T10	5188A
3Z12T20	5188A
3Z13T10	5189A
3Z13T20	5189A
3Z15	5130A
3Z15A	5130A
3Z15B	5130A
3Z15M	5191A
3Z15T5	5191A
3Z15T10	5191A
3Z15T20	5191A
3Z16T5	5192A
3Z16T10	5192A
3Z16T20	5192A
3Z18	5133A
3Z18A	5133A
3Z18B	5133A
3Z18M	5194A
3Z18T5	5194A
3Z18T10	5194A
3Z20T10	5196A
3Z20T20	5196A
3Z21	5135A
3Z21A	5135A
3Z21B	5135A
3Z22M	5197A
3Z22T5	5197A
3Z22T10	5197A
3Z22T20	5197A
3Z24	5137A
3Z24A	5137A
3Z24B	5137A
3Z24T5	5198A
3Z24T10	5198A
3Z24T20	5198A
3Z27	5139A
3Z27A	5139A
3Z27B	5139A
3Z27M	5200A
3Z27T5	5200A
3Z27T10	5200A
3Z27T20	5200A
3Z30	5141A
3Z30A	5141A
3Z30B	5141A

PART NUMBER	NTE REPLACEMENT
3Z30T5	5202A
3Z30T10	5202A
3Z30T20	5202A
3Z33	5142A
3Z33A	5142A
3Z33B	5142A
3Z33T5	5203A
3Z33T10	5203A
3Z36	5143A
3Z36A	5143A
3Z36B	5143A
4.3Y	5008A
4.3Y(ZENER)	5008A
4.7B1	5009A
4.7B1(ZENER)	5009A
4.7B2	5009A
4.7B2(ZENER 1)	5069A
4.7B3	5009A
4.7EB1	5009A
4.7EB3	5009A
4.7X	5009A
4.7Z	5009A
4-005	725
4-006	725
4-007	703
4-008	703
4-009	703
4-003721-00	175
4-027(EF.JOHNSON)	480
4-082-664-0001	704
4-0294	130
4-0485	108
4-0498	128
4-0563	130
4-4A-1A7-1	121
4-6B-3A7-1	121MP
4-8P-2A7-1	102A
4-9L-4A7-1	102A
4-12-1A7-1	123AP
4-14A17-1	121
4-44-0012-PT2	160
4-46	199
4-47	199
4-47(SEARS)	123AP
4-48	226MP
4-48(SEARS)	226MP
4-50	116
4-50(SEARS)	116
4-65-1A7-1	160
4-65-2A7-1	103A
4-65-4A7-1	101
4-65A17-1	160
4-65B17-1	160
4-65C17-1	121
4-66-1A7-1	102A
4-66-2A7-1	102A
4-66-3A7-1	102A
4-74-3A7-1	100
4-77A17-1	105
4-77B17-1	121MP
4-77C17-1	121
4-88A17-1	121
4-88B17-1	160
4-88C17-1	100
4-92-1A7-1	105
4-142	131
4-142-1(SEARS)	176
4-202A16	109
4-202R101	116
4-206T-01200	1328
4-245	181
4-265	175
4-274	128
4-279	126
4-280	126
4-282	109
4-283	185
4-288	128
4-324	133
4-397	128
4-398	128
4-399	108
4-400	108
4-432	160
4-433	108
4-434	108
4-435	104
4-436	136A
4-436(SEARS)	136A
4-437	614
4-438	124
4-443	108
4-458	181
4-464	152
4-490	181
4-850	107
4-851	123AP
4-852	109
4-853	109
4-854	109
4-855	109
4-856	5072A
4-857	109
4-882	109
4-1001	128
4-1544	199
4-1545	123AP
4-1546	176
4-1723	5067A
4-1724	177
4-1726	177
4-1790	123AP
4-1791	199
4-1792	192

PART NUMBER	NTE REPLACEMENT
4-1807	116
4-1848	131MP
4-2020	109
4-2020-05000	113A
4-2020-08000	506
4-2020-07800	506
4-2020-07300	116
4-2020-05400	113A
4-2020-06500	506
4-2020-08200	177
4-2020-06200	177
4-2020-08600	110MP
4-2020-08700	113A
4-2020-08900	116
4-2020-06700	506
4-2020-03800	506
4-2020-06100	177
4-2020-03500	109
4-2020-03700	506
4-2020-03900	125
4-2020-06600	5022A
4-2020-07500	137A
4-2020-07900	113A
4-2020-03200	116
4-2020-06800	116
4-2020-06400	177
4-2020-08500	116
4-2020-07600	116
4-2020-03600	109
4-2020-07700	116
4-2020-05800	177
4-2020-05200	116
4-2020-0500	113A
4-2020-05600	110MP
4-2020-09200	5077A
4-2020-08001	177
4-2020-07601	116
4-2020-07801	506
4-2020-07802	506
4-2020-03-700	506
4-2020-03173	116
4-2020-03571	109
4-2020-8000	125
4-2020-8700	125
4-2020-10100	177
4-2020-10500	116
4-2020-11300	5071A
4-2020-11500	5074A
4-2020-12000	5077A
4-2020-12300	5074A
4-2020-12400	142A
4-2020-12700	145A
4-2020-13300	5085A
4-2020-13600	116
4-2020-14000	151A
4-2020-14100	5096A
4-2020-14400	506
4-2020-14500	116
4-2020-14600	506
4-2020-15100	506
4-2020-15600	177
4-2020-16200	177
4-2021	174
4-2021-05000	178MP
4-2021-08070	505
4-2021-09070	5074A
4-2021-05170	112
4-2021-04170	166
4-2021-08170	505
4-2021-08270	116
4-2021-09370	116
4-2021-05470	138A
4-2021-04470	125
4-2021-07470	177
4-2021-04570	506
4-2021-07570	505
4-2021-08570	5080A
4-2021-07670	177
4-2021-04770	125
4-2021-05870	109
4-2021-04870	506
4-2021-06970	506
4-2021-07970	506
4-2021-04970	116
4-2021-7370	503
4-2021-10270	116
4-2021-10470	116
4-2021-10870	5074A
4-2029-7086D	519
4-2029-70791-1S188	614
4-2029-70860	519
4-2029-71590	177
4-2039-70380	229
4-2039-70431	85
4-2039-70460	85
4-2040-08000	177
4-2060-04000	712
4-2060-04800	1122
4-2060-02600	1080
4-2060-03900	1080
4-2060-04200	1094
4-2060-09200	738
4-2060-04600	712
4-2060-07300	1121
4-2060-04400	1004
4-2060-02400	1004
4-2060-04300	1121
4-2060-04900	1122
4-2060-07500	1158
4-2060-07200	1094
4-2060-02300	1004
4-2060-2300	1004
4-2060-2400	1004
4-2061-05470	712

PART NUMBER	NTE REPLACEMENT
4-2061-04970	712
4-2069-70232	1563
4-2069-71660	1657
4-2069-71710	1517
4-2069-71730	1842
4-2073	160
4-3033	116
4-3034	177
4-3036	1029
4-5145	123AP
4-18341	614
4-68681-2	102A
4-68681-3	102A
4-68682-3	123AP
4-68687-3	117
4-68689-3	125
4-68695-3	108
4-68697-3	125
4-684120-3	108
4-685285-3	108
4-686105-3	125
4-686106-3	125
4-686107-3	108
4-686108-3	108
4-686112-3	108
4-686114-3	108
4-686116-3	117
4-686118-3	108
4-686119-3	108
4-686120-3	108
4-686126-3	108
4-686127-3	108
4-686130-3	175
4-686131-3	108
4-686132-3	123AP
4-686139-3	125
4-686140-3	108
4-686143-3	123AP
4-686144-3	123AP
4-686145-3	154
4-686147-3	117
4-686148-3	117
4-686149-3	116
4-686150-3	117
4-686151-3	117
4-686163-3	102A
4-686169-3	108
4-686170-3	129
4-686171-3	108
4-686172-3	108
4-686173-3	123AP
4-686177-3	117
4-686179-3	125
4-686182-3	128
4-686183-3	123AP
4-686184-3	125
4-686186-3	125
4-686189-3	125
4-686195-3	102A
4-686196-3	102A
4-686199-3	125
4-686201-3	125
4-686207-3	108
4-686208-3	108
4-686209-3	108
4-686212-3	125
4-686213-3	121
4-686224-3	108
4-686226-3	175
4-686228-3	108
4-686229-3	129
4-686230-3	129
4-686231-3	123AP
4-686232-3	154
4-686234-3	196
4-686235-3	129
4-686238-3	129
4-686244-3	108
4-686251-3	108
4-686252-3	191
4-686256-1	126
4-686256-2	126
4-686256-3	126
4-686257-3	123AP
4-3022861	108
4-3023190	181
4-3023212	123AP
4-3023221	123AP
4-3023222	129
4-3023223	128
4-3023843	130
4-3023844	128
4-3025763	108
4-3025764	108
4-3025765	108
4-3025766	123AP
4-3025767	108
4-3540012	116
4-8134842	191
4-20210937	116
4-20214370	113A
4-30203845	129
4-202003571	109
4-202012000	5077A
4-202104170	116
4-202104570	506
4-202104770	158
4-202104870	506
4-202104970	177
4-202105070	174
4-202105470	138A
4-202109370	125
4-2020035000	109
4-JBD1	108

PART NUMBER	NTE REPLACEMENT
4A2	5006A
4A8-1A7-1	160
4A8-1A5	160
4A132	5944
4A162	5994
4A232	5994
4A262	5994
4A1122	5994
4A2122	5994
4A-1	121
4A-1-70	121
4A-1-70-12	121
4A-1-70-12-7	121
4A-1-A-7B	121
4A-1A	121
4A-1A0	121
4A-1A0R	121
4A-1A1	121
4A-1A2	121
4A-1A3	121
4A-1A3P	121
4A-1A4	121
4A-1A4-7	121
4A-1A5	121
4A-1A5L	121
4A-1A6	121
4A-1A6-4	121
4A-1A7	121
4A-1A7-1	121
4A-1A8	121
4A-1A9	121
4A-1A9G	121
4A-1A19	121
4A-1A21	121
4A-1A82	121
4A-1AO	121
4A-1AOR	121
4A-10	121
4A-11	121
4A-12	121
4A-13	121
4A-14	121
4A-15	121
4A-16	121
4A-17	121
4A-18	121
4A-19	121
4AJ4DX52D	116
4AJ4DX520	116
4B4B41	5312
4C1	5982
4C2	5986
4C4	5990
4C6	5994
4C8	5998
4C10	6002
4C28	128
4C29	128
4C30	128
4C31	128
4C43	123AP
4D4	116
4D6	116
4D8	116
4D12EB1	5021A
4D20	123AP
4D21	123AP
4D22	123AP
4D24	123AP
4D25	123AP
4D26	123AP
4G4B41	5314
4G8	125
4G132	5994
4G162	5994
4G232	5994
4G262	5994
4G1122	5994
4G2122	5994
4GA	116
4GZ10A	5186A
4GZ10B	5186A
4GZ12A	5188A
4GZ12B	5223A
4GZ15A	5191A
4GZ15B	5226A
4GZ18A	5194A
4GZ18B	5230A
4GZ22A	5197A
4GZ27A	5200A
4GZ33A	5203A
4GZ39A	5205A
4GZ47A	5208A
4GZ56A	5212A
4GZ68A	5215A
4GZ82A	5217A
4H1303-0219	109
4H1303-0613	519
4H1303-1201	552
4H1303-1356	116
4H1303-1393	552
4H1304-0125	229
4H1304-0938	123AP
4H1304-0941	159
4H1304-1025	229
4H1304-1084	373
4H1304-4101	159
4H1304-4104	159
4H1304-4121	123AP
4H1304-4145	229
4H1304-4154	229
4H1304-4196	123AP
4H1304-4283	383
4H1304-4349	382
4H1304-4358	159
4H1364-0941	159
4H2098-0357	1292
4H13030302	177
4H13030312	109
4H13030702	177
4H13030845	610
4H13030847	519
4H13030862	5018A
4H13030862(MAGNAVOX)	5018A
4H13030869	109
4H13030983	519
4H13030984	519
4H13030993	5313
4H13031012	109
4H13031168	125
4H13031173	125
4H13031174	116
4H13031201	552
4H13031438	116
4H13031907	610
4H13034167	5013A
4H13034173	5011A
4H13034197	5021T1
4H13034278	5014A
4H13040937	123AP
4H13040938	123AP
4H13040941	159
4H13041041	297
4H13041085	379
4H13041275	125
4H13041356	107
4H13041395	159
4H13041436	47
4H13041461	107
4H13041487	580
4H13041773	171
4H13041782	399
4H13041803	399
4H13044121	123AP
4H13044196	123AP
4H13044197	159
4H13044283	383
4H13044349	382
4H13044358	159
4H13044503	123AP
4H20941448	395
4H20980821	1248
4H20980967	1563
4H20981194	1231A
4H20981252	1571
4H20981473	1288
4H130300621	177
4I29200602	110MP
4I39104002	116
4IC-407	1003
4IC-409	1110
4J24X539	142A
4J56	126
4J13040995	153
4JA2FX355	116
4JA2X355	116
4JA4DR700	116
4JA4DX520	116
4JA6MR700	116
4JA10DX3	116
4JA10DX32	116
4JA10EX3	116
4JA11BX4	5874
4JA16MR700M	125
4JA27DR700	5878
4JA38DR700	5998
4JA70MR700	6156
4JA211A	116
4JB2C6	112
4JBC12	112
4JD1A17	100
4JD1A73	102
4JD3B1	101
4JD5E29	6400
4JD7A32	128
4JX1A520	102
4JX1A520B	102
4JX1A520C	102
4JX1A520D	100
4JX1A520E	100
4JX1A813	160
4JX1C707	160
4JX1C850	102
4JX1C850A	100
4JX1C1224	102
4JX1D925	102A
4JX1E596	123AP
4JX1E821	100
4JX1E850	103
4JX2A60	100
4JX2A601	103
4JX2A616	103A
4JX2A801	101
4JX2A816	103
4JX2A822	103
4JX5E670	6400
4JX7A972	123AP
4JX8D404	121
4JX8P404	121
4JX8P409	121
4JX11C2848	128
4JX16A567	123AP
4JX16A569	103
4JX16A667	123AP
4JX16A667/G	123AP
4JX16A667/O	123AP
4JX16A667/R	123AP
4JX16A667/Y	123AP
4JX16A667G	123AP
4JX16A667O	123AP
4JX16A667R	123AP
4JX16A667Y	123AP
4JX16A668	123AP
4JX16A668/G	123AP
4JX16A668/O	123AP
4JX16A668/Y	123AP
4JX16A668G	123AP
4JX16A668O	123AP
4JX16A668Y	123AP
4JX16A669	123AP
4JX16A669G	123AP
4JX16A669Y	123AP
4JX16A670	123AP
4JX16A670G	123AP
4JX16A6670	123AP
4JX16A6680	123AP
4JX16B670/B	123AP
4JX16B670/R	123AP
4JX16B670/Y	123AP
4JX16B670B	123AP
4JX16B670G	123AP
4JX16B670R	123AP
4JX16B670Y	123AP
4JX16E3860	123AP
4JX16E3890	123AP
4JX16E3960	123AP
4JX24X539	142A
4JX29A529	159
4JX29A826	159
4JX29A829	159
4JX2816	103
4JX2825	103
4JZ4X539	142A
4JZ4XL12	142A
4K30	5400
4K60	5401
4K100	5402
4L30	5400
4L100	5402
4N25	3040
4N26	3040
4N27	3040
4N28	3040
4N29	3084
4N29A	3084
4N30	3084
4N31	3084
4N32	3083
4N32A	3083
4N33	3083
4N35	3041
4N36	3041
4N37	3041
4O9C	614
4RCM5	5481
4RCM30	5484
4S954(2)	519
4SD46-2	109
4T6.2	137A
4T6.2A	137A
4T6.2B	137A
4T501	116
4T502	116
4T503	116
4T504	116
4T505	116
4T506	116
4T507	125
4T508	125
4T509	125
4T510	125
4W01-13	142A
4ZL	186A
5.1	5010A
5.1B	5010A
5.1B1	5010A
5.1B1(ZENER)	5010A
5.1B2	5010A
5.1B2(ZENER)	5010A
5.1EB2	5010A
5.1EB3	5010A
5.1N1	5010A
5.1N2	5010A
5.1N3(ZENER)	5010A
5.1X	5010A
5.1X(ZENER)	5010A
5.6B	5011A
5.6B1(ZENER)	5011A
5.6B2	5011A
5.6B3	5011A
5.6B(ZENER)	5011A
5.6EB	5011A
5.6EB1	5011T1
5.6L2	5011A
5.6N1	5011A
5.6N1(ZENER)	5011A
5.6N2	5011A
5.6N2(ZENER)	5011A
5.6V	136A
5.6X	5011A
5.6Y	5011A
5.6Y(ZENER)	5011A
5.6Z	5011A
5-0044-093	74LS93
5-0046-925	74C925
5-3/830136.T	125
5-8	123AP
5-30082.3	125
5-30082.4	125
5-30086.1	116
5-30088.1	116
5-30088.2	117
5-30088.3	125
5-30094.1	116
5-30095.1	116
5-30098.1	116
5-30099.1	116
5-30099.3	116
5-30099.4	116
5-30106.1	116
5-30109.1	116
5-30111.1	117
5-30113.1	116
5-30119.1	503
5-30120.1	116
5-30122.1	117
5-30132.1	118
5-113641	9946
5-70004503	123AP
5-70005452	123AP
5-70005503	123AP
5-7000901504	123AP
5-S30082.1003	117
5-S30088.1002	125
5-S30088.1003	125
5-S30088.1004	125
5-S30106.1001	125
5-S30111.1001	125
5A1	116
5A2	116
5A3	116
5A4	116
5A4D	116
5A4D-C	116
5A5	116
5A5D	116
5A6	116
5A6D	116
5A6D-C	116
5A8	125
5A8DC	125
5A10	125
5A10C	125
5A10D-C	125
5A15	5400
5A-09449	955M
5A-8753	5322
5A-8785	116
5A-8919	519
5A-8948	7402
5A-8970	4543B
5A-8971	4069
5A-8972	6821
5A-8973	7408
5A-8974	7406
5A-8975	4049
5A-8978	332
5A-8985	430
5A-8987	6800
5A-8989	6887
5A-8990	6889
5A-9003	6810
5A-9004	428
5A-9005	435P22
5A-9006	416
5A-9010	74154
5A-9011	7410
5A-9012	7442
5A-9013	7404
5A-9014	5400
5A-9017	65101
5A-9018	5014A
5A-9049	931
5A-9049(WILLIAMS)	931
5A-9050	5340
5A-9059	5007A
5A-9073	7400
5A-9135	140A
5A-9153	4050B
5A-9154	4068B
5A-9155	4011B
5A-9156	1232
5A-9157	960
5A-9158	116
5A-9216	287
5A-9217	288
5A-9235	74LS10
5A-9247	74LS02
5A-9250	6802
5A-9266	5079A
5A-9321	778A
5A-9424	923D
5A-D	116
5A/5C-8938	123AP
5AA5-1	105
5AD8	156
5AD8DC	156
5AD10	156
5AD10C	156
5AD10D	156
5B2	156
5B3	116
5B4	169
5B-1	116
5B-2	116
5B-2-H5W	116
5B-2-H5W(SHARP)	506
5B-15H	116
5B-15H(SHARP)	506
5B-6258	116
5B-9045	5802
5B-9054	116
5B-9060	5096A
5C1	5010T1
5C3	5010T1
5C3(ZENER)	5010T1
5C(C)1	5010T1
5C-8977	261
5C-8979	377
5C-9002	978
5C-9016	159
5C-9056	287
5CC1	5010T1
5CH2SM	6240
5D1	116
5D2	116
5D8	125
5D10	125
5D20-1	783
5D-5A-L	5068A
5E1	116
5E2	116
5E3	116
5E4	116
5E5	116
5E6	116
5E8	125
5E4850/56-0002	128
5F1	5830
5F5	5850
5F10	5916
5F15	5994
5F20	5994
5F30	5920
5F40	5529
5G8	125
5G-D	116
5GA	116
5GB	116
5GD	116
5GF	125
5GFH	116
5GJ	125
5GJ/FR1N	116
5GJFR1N	116
5GL	116
5H	116
5H3P	5850
5H3PN	5851
5H4D1	116
5H750M	116
5J3P	5870
5J-F1	116
5K10	125
5K4164ANP-15	4164
5L1626	7447
5M40	5900
5M50	5902
5M60	5904
5M80	5908
5M100	5910
5MA2	116
5MA4	116
5MA4D	116
5MA5	116
5MA6	116
5MA8	125
5MA10	125
5MAK	116
5MF1	116
5MS5	116
5MS10	116
5MS20	116
5MS30	116
5MS40	116
5MS50	116
5N1	116
5N2	5874
5N3	5874
5O	109
5P2	5874
5P3	5874
5Q3	5981
5RC2	5480
5RC5	5481
5RC5A	5481
5RC10	5482
5RC10A	5482
5RC15	5482
5RC20	5482
5RC20A	5482
5RC25	5484
5RC30	5484
5RC30A	5484
5RC40	5485
5RC40A	5485
5RC50	5486
5RC50A	5486
5RC50B	5486
5RC60	5487
5RC60A	5487
5RCL2	5481
5RCL5	5481
5RCL10	5482
5RCL15	5482
5RCL20	5482
5TB1	5482
5TB2	5482
5TB3	5484
5TB4	5485
5TB5	5486
5TB6	5487
5TCRA	5480
5TCRB	5470
5TCRC	5471
5TCRE	5472
5TCRG	5473
5TCRH	5474
5TCRI	5475
5TCRJ	5476
5V6	5117A
5Z82B	5153A
5ZS3.3	5111A
5ZS3.3A	5111A
5ZS3.3B	5111A
5ZS3.6	5112A
5ZS3.6A	5112A
5ZS3.6B	5112A
5ZS3.9	5113A
5ZS3.9A	5113A
5ZS3.9B	5113A
5ZS4.3	5114A
5ZS4.3A	5114A
5ZS4.3B	5114A
5ZS5.1	5116A
5ZS5.1A	5116A
5ZS5.1B	5116A
5ZS5.6	5117A
5ZS5.6A	5117A
5ZS5.6B	5117A
5ZS6.0A	5118A
5ZS6.0B	5856
5ZS6.2	5119A
5ZS6.2A	5119A
5ZS6.2B	5119A
5ZS7.5	5121A
5ZS7.5A	5121A
5ZS7.5B	5121A
5ZS8.2	5122A
5ZS8.2A	5122A
5ZS8.2B	5122A
5ZS8.7	5123A
5ZS8.7A	5123A
5ZS8.7B	5123A
5ZS9.1	5124A
5ZS9.1A	5124A
5ZS9.1B	5124A
5ZS10	5125A
5ZS10A	5125A
5ZS10B	5125A
5ZS11	5126A
5ZS11A	5126A
5ZS11B	5126A
5ZS12	5127A
5ZS12A	5127A
5ZS12B	5127A
5ZS13	5128A
5ZS13A	5128A
5ZS13B	5128A
5ZS14	5129A
5ZS14A	5129A
5ZS14B	5129A
5ZS15	5130A
5ZS15A	5130A
5ZS15B	5130A
5ZS16	5131A
5ZS16A	5131A
5ZS16B	5131A
5ZS17	5132A
5ZS17A	5132A
5ZS17B	5132A
5ZS18	5133A
5ZS18A	5133A
5ZS18B	5133A
5ZS19	5134A
5ZS19A	5134A
5ZS19B	5134A
5ZS20	5135A
5ZS20A	5135A
5ZS20B	5135A
5ZS22	5136A
5ZS22A	5136A
5ZS22B	5136A
5ZS24	5137A
5ZS24A	5137A
5ZS24B	5137A
5ZS25	5138A
5ZS25A	5138A
5ZS25B	5138A
5ZS27	5139A
5ZS27A	5139A
5ZS27B	5139A
5ZS28	5140A
5ZS28A	5140A
5ZS28B	5140A
5ZS30	5141A
5ZS30A	5141A
5ZS30B	5141A
5ZS33	5142A
5ZS33A	5142A
5ZS33B	5142A
5ZS36	5143A
5ZS36A	5143A
5ZS36B	5143A
5ZS39	5144A
5ZS39A	5144A
5ZS39B	5144A
5ZS43	5145A
5ZS43A	5145A
5ZS43B	5145A
5ZS47	5146A
5ZS47A	5146A
5ZS47B	5146A
5ZS51	5147A
5ZS51A	5147A
5ZS51B	5147A
5ZS60	5091A
5ZS60A	5091A
5ZS60B	5091A
5ZS68	5151A
5ZS68A	5151A
5ZS68B	5151A
5ZS75	5152A
5ZS75A	5152A
5ZS75B	5152A
5ZS82	5153A
5ZS82A	5153A
5ZS87	5153A
5ZS87A	5153A
5ZS87B	5153A
5ZS91	5155A
5ZS91A	5155A
5ZS91B	5155A
5ZS100	5156A
5ZS100A	5156A
5ZS100B	5156A
6.2B	5013A
6.2B1	5070A
6.2B1(ZENER)	5013A
6.2B2	5013A
6.2B3	5013A
6.2B(ZENER)	5013A
6.2EB3	5013A
6.2N1	5013A
6.2N2	5013A
6.2SR1	137A
6.2SR1A	137A
6.2SR2	137A
6.2SR2A	137A
6.2SR3	137A
6.2SR3A	137A
6.2SR4	137A
6.2SR4A	137A
6.2Y	5013A
6.2Y(ZENER)	5013A
6.2Z(ZENER)	5013A
6.8	5014A
6.8(ZENER)	5014A
6.8B	5014A
6.8B1	5014A
6.8B2	5014A
6.8B3	5014A
6.8EB1	5014A
6.8EB3	5014A
6.8N2	5014A
6.8X	5014A
6.8X(ZENER)	5014A
6.8Y	5014A
6.8Y(ZENER)	5014A
6.8Z	5014A
6.8Z(ZENER)	5014A
6-000105	102
6-0000139	128
6-0000155A	102
6-0000158	121
6-000140	175
6-0004799	5635
6-0005193	152
6-000555-2	175
6-007-3	708
6-02	123AP
6-04	123AP
6-04GRN	123AP
6-04ORN	123AP
6-04ORNN	123AP
6-04S1	123AP
6-04S2	123AP
6-05	123AP
6-05F	123AP
6-05YEL	123AP
6-0451	123AP
6-0452	123AP
6-4	123AP
6-11	123AP
6-13	102A
6-19	123AP
6-24	175
6-30	123AP
6-31	159
6-31A	159
6-38	159
6-38A	159
6-49	234
6-50	126
6-53	102A
6-53/63	102
6-53A	102A
6-53F	102A
6-60	102A
6-60-P	102
6-60A	160
6-60B	102A
6-60C	160
6-60D	102A
6-60E	160
6-60F	160
6-60P	102A
6-60T	160
6-60X	160
6-61	102A
6-61-P	102
6-61A	160
6-61B	102A
6-61D	102A
6-61E	160
6-61F	160
6-61P	102A
6-61T	160
6-61X	160
6-62	102A
6-62-P	102
6-62A	102A
6-62B	102A
6-62C	160
6-62D	102A
6-62E	160
6-62F	126
6-62P	126

PART NUMBER	NTE REPLACEMENT
6-62X	126
6-63	102A
6-63A	102A
6-63T	102A
6-65	102A
6-65T	102A
6-66	102A
6-66T	102A
6-67	102A
6-67T	102A
6-69	160
6-69X	160
6-70	126
6-71	126
6-72	126
6-84F	160
6-85F	160
6-87	102A
6-88	102A
6-88(AUTOMATIC)	131
6-89	126
6-89X	101
6-90	123AP
6-93	123AP
6-137	130
6-138	234
6-138(PWR)	130
6-139	128
6-140	175
6-155	102
6-158	121
6-801	102
6-809	199
6-810	199
6-811	85
6-812	85
6-813	5408
6-818	175
6-819	6401
6-821	5452
6-822	314
6-823	5512
6-825	100
6-826	128
6-827	129
6-828	384
6-829	130MP
6-830	384
6-831	396
6-832	397
6-833	190
6-834	6404
6-835	129
6-836	132
6-837	130MP
6-838	128
6-839	6409
6-840	224
6-841	9660
6-843	56006
6-844	129
6-845	129
6-846	188
6-847	189
6-848	326
6-850	132
6-852	5400
6-854	5452
6-855	123A
6-856	5633
6-857	130
6-858	5414
6-859	312
6-861	184
6-862	185
6-865-1	130
6-865-2	130
6-866	192A
6-867	175
6-868-2	85
6-871	284
6-873	5453
6-874	85
6-875	193
6-876	987
6-877	7402
6-878	834
6-879	4099B
6-881	196
6-882	4001B
6-883	4011B
6-884	4013B
6-885	4017B
6-886	4019B
6-887	4023B
6-888	4043B
6-889	74C08
6-890	74C93
6-891	80C97
6-892	955M
6-893	978
6-894	960
6-895	964
6-896	966
6-897	969
6-898	159
6-901	4016B
6-902	4022B
6-904	74C32
6-907	291
6-909	467
6-914	74C00
6-917	199
6-918	159
6-919	524V15
6-920	74C04
6-921	261
6-922	262
6-923	74C02
6-924	133
6-925	47
6-927	778A
6-929	4069
6-930	955M
6-931	2V025
6-937	4516B
6-939	997
6-940	4520B
6-946	4508B
6-949	4028B
6-950	4093B
6-957	74S287
6-958	4514B
6-965	4098B
6-966	74S287
6-2708	108
6-4799	5635
6-5193	152
6-5363	102A
6-5552	175
6-9029-15D	123AP
6-9029-15E	123AP
6-9029-20J	129
6-9341	1V010
6-59010	116
6-490001	175
6-1260039	160
6-1260039A	160
6-6450036	123AP
6-6490001	175
6-6490004	130
6A01	5812
6A05	5812
6A1	5011T1
6A1(ZENER)	5011T1
6A2	5814
6A4	5814
6A6	5815
6A8	5817
6A8-1A5L	160
6A10	5817
6A15	5850
6A30	5850
6A50	5850
6A100	5852
6A200	5854
6A300	5856
6A400	5858
6A500	5860
6A600	5862
6A700	5866
6A800	5866
6A900	5868
6A1000	5868
6A10227	123AP
6A10228	128
6A10229	131
6A10422	123AP
6A10423	123AP
6A10520	123AP
6A10622	158
6A10624	102A
6A10851	123AP
6A10855	123AP
6A11180	123AP
6A11223	161
6A11301	158
6A11665	102A
6A11668	102A
6A12515	158
6A12516	102A
6A12517	158
6A12677	108
6A12678	100
6A12679	108
6A12680	126
6A12681	123AP
6A12682	123AP
6A12683	123AP
6A12684	102A
6A12685	102A
6A12725	123AP
6A12990	102A
6A12992	103A
6A12993	103
6A16399	123AP
6B1	137A
6B1(ZENER)	5011T1
6B2	137A
6B2(3%)	5011T1
6B20	5916
6B40	552
6B60	5315
6B-3	121MP
6B-3-70	121MP
6B-3-70-12	121MP
6B-3A	121MP
6B-3A0	121MP
6B-3A1	121MP
6B-3A2	121MP
6B-3A3	121MP
6B-3A3P	121MP
6B-3A4	121MP
6B-3A4-7	121MP
6B-3A4-7B	121MP
6B-3A5	121MP
6B-3A5L	121MP
6B-3A6	121MP
6B-3A7	121MP
6B-3A7-1	121MP
6B-3A8	121MP
6B-3A9	121MP
6B-3A9G	121MP
6B-3A19	121MP
6B-3A21	121MP
6B-3A82	121MP
6B-3AOR	121MP
6B-30	121MP
6B-31	121MP
6B-32	121MP
6B-33	121MP
6B-34	121MP
6B-35	121MP
6B-36	121MP
6B-37	121MP
6B-38	121MP
6B-39	121MP
6BG11	5916
6C05	5850
6C05R	5851
6C1	5012A
6C1(ZENER)	5012A
6C2(ZENER)	5013A
6C3	5013T1
6C3(ZENER)	5013T1
6C10	5852
6C10R	5853
6C15	5854
6C15R	5855
6C20	5854
6C20R	5855
6C30	5856
6C30R	5857
6C40	5858
6C40R	5859
6C50	5860
6C50R	5861
6C60	5862
6C60R	5863
6C70	5866
6C70R	5867
6C80	5866
6C80R	5867
6C90	5868
6C90R	5869
6C100	5868
6C100R	5869
6CC11	5944
6CC12	5916
6CC13	5916
6CG12	5858
6D0000105	102
6D122	102A
6D122R	102A
6D122T	102A
6D122TC	102A
6D122TH	102A
6D122U	102A
6D122V	102A
6D122W	102A
6D122Y	102A
6D67800A03	118
6DC11	5994
6DC12	5916
6DD12	5916
6DG11	5916
6DM	5072A
6E4850/56-0002	128
6E4850/56-0001	123AP
6F5	5850
6F5-D	5850
6F5A	5850
6F5B	5850
6F5D	5874
6F10	5852
6F10-D	5852
6F10A	5852
6F10B	5852
6F10D	5874
6F15	5854
6F15-D	5854
6F15A	5854
6F15B	5854
6F15D	5854
6F20	5854
6F20-D	5854
6F20A	5854
6F20B	5853
6F20D	5874
6F30	5856
6F30-D	5856
6F30A	5856
6F30B	5856
6F40	5858
6F40-D	5858
6F40A	5858
6F40B	5858
6F40D	5990
6F50	5860
6F50-D	5860
6F50A	5860
6F50B	5860
6F60	5862
6F60-D	5862
6F60A	5862
6F60B	5862
6F60D	5862
6F70	5866
6F70A	5866
6F70B	5866
6F80	5866
6F80-D	5866
6F80A	5866
6F80B	5866
6F80D	5866
6F90	5868
6F90A	5868
6F90B	5868
6F100	5868
6F100-D	5868
6F100A	5868
6F100B	5868
6F100D	5868
6FA10-D	5853
6FB1L	5312
6FB2L	5313
6FB4L	5314
6FB6L	5315
6FC12	5920
6FC13	5920
6FD12	5920
6FD13	5920
6FG11	5920
6FH05S	5912
6FH1S	5916
6FH2S	5916
6FH3S	5920
6FH4S	5920
6FR5	5851
6FR5-D	5851
6FR5A	5851
6FR10	5853
6FR10-D	5853
6FR10A	5853
6FR10B	5853
6FR15	5855
6FR15A	5855
6FR15B	5855
6FR20	5855
6FR20-D	5855
6FR20A	5855
6FR20B	5855
6FR30	5857
6FR30A	5857
6FR30B	5857
6FR40	5859
6FR40-D	5859
6FR40A	5859
6FR40B	5859
6FR50	5861
6FR50A	5861
6FR50B	5861
6FR58	5851
6FR60	5863
6FR60-D	5863
6FR60A	5863
6FR60B	5863
6FR70	5867
6FR70A	5867
6FR70B	5867
6FR80	5867
6FR80-D	5867
6FR80A	5867
6FR80B	5867
6FR90	5869
6FR90A	5869
6FR90B	5869
6FR100	5869
6FR100A	5869
6FR100B	5869
6G4	113A
6G8	116
6GA175D	116
6GA1750	116
6GC1	113A
6GC1BY1	113A
6GC12	5858
6GD12	5920
6GG11	5920
6GX1	115
6H740AC	940
6I0148-1	128
6JC12	5862
6L122	102A
6LC12	5866
6LF074-3	171
6LF11	5867
6M4	116
6M10	5916
6M20	5916
6M40	5920
6M404-1	116
6M404-2	116
6M404-3	116
6M404-4	116
6M404-5	116
6M404-6	116
6M404-7	116
6MA10	5916
6MA20	5916
6MA40	5920
6MC	160
6N135	3092
6N136	3092
6N137	3087
6N138	3093
6N139	3093
6NC12	5868
6NF11	5869
6R522PC7BAD1	116
6RS7PH30BCB1	118
6RS7PH130BCB1	118
6RS18PH10BNB1	118
6RS18PH110BEB1	118
6RS18PH110BHB1	118
6RS18PH110BMB1	118
6RS18PH110BNB1	118
6RS51GX12	120
6RW62HY	116
6S2	6400
6S4	5814
6S6	5815
6S10	5817
6S155080	5012A
6SB050	5312
6SB1000	5317
6V-200	136A
6X97047A01	123AP
6X97047A02	102A
6X97174A01	177
6X97174XA08	177
7.5 B2	5015A
7.5B	5015A
7.5B1	5015A
7.5B2	5015A
7.5B(ZENER)	5015A
7.5JB2	5015A
7-0002	116
7-0002-00	128
7-0003	166
7-0004	116
7-0005	109
7-0006	109
7-0007	5226A
7-0008	116
7-0009	5220A
7-0030-00	175
7-0011-00	128
7-0012-00	129
7-0013	177
7-0014	159
7-0015	123AP
7-0051-00	128
7-0112-00	152
7-0112-03	152
7-0112-04	152
7-0112-05	152
7-1(SARKES)	123AP
7-1(STANDEL)	121
7-2	121
7-2(SARKES)	123AP
7-2(STANDEL)	104MP
7-3(SARKES)	123AP
7-3(STANDEL)	129
7-4	108
7-4(SARKES)	123AP
7-4(STANDEL)	129
7-5	123AP
7-5(SARKES)	123AP
7-6	108
7-6(SARKES)	123AP
7-7	108
7-7(SARKES)	123AP
7-8	108
7-8(SARKES)	123AP
7-8(STANDEL)	168
7-9	161
7-9(SARKES)	161
7-10	161
7-10(SARKES)	161
7-11(SARKES)	161
7-11(STANDEL)	125
7-12	130
7-12(STANDEL)	130
7-13	130
7-13(STANDEL)	130
7-14A	129
7-15(SARKES)	123AP
7-15(STANDEL)	125
7-16	107
7-16(SARKES)	123AP
7-17	123AP
7-17(SARKES)	123AP
7-18(SARKES)	123AP
7-19	124
7-19(SARKES)	123AP
7-19(STANDEL)	124
7-20	107
7-20(SARKES)	123AP
7-21(SARKES)	161
7-22	107
7-22(SARKES)	161
7-23	107
7-23(SARKES)	161
7-24(SARKES)	161
7-25(SARKES)	161
7-26	107
7-28	161
7-28(STANDEL)	218
7-29	614
7-29(STANDEL)	175
7-36	107
7-39	107
7-40	222
7-43	107
7-44	108
7-45	107
7-59-001/3477	109
7-59-005/3477	166
7-59-010/3477	102
7-59-020/3477	123AP
7-59-0203477	108
7-59-0103477	158
7-59-0603477	102A
7-59-060/3477	102
7-59-0013477	109
7-59-0053477	166
7-59-019/3477	123AP
7-59-021/3477	123AP
7-59-022/3477	123AP
7-59-023/3477	123AP
7-59-024/3477	123AP
7-59-029/3477	100
7-59-068	123AP
7-59-0193477	108
7-59-0213477	108
7-59-0223477	108
7-59-0233477	108
7-59-0243477	123AP
7-59-0293477	102A
7-117-02	221
7-729-213-12	399
7-759-982-21	977
7-3401A	126
7-5806	5547
7-5851	5675
7-5851-02	5675
7-5851V	5675
7-5853	5651
7-5853A	5642
7-5853B	5642
7-6006-00	5806
7-25806-01	5547
7-73004-02	176
7-73004-03	176
7-73004-04	176
7-73004-1	176
7-466201	181
7-1585122	5675
7-2580504	5494
7-2585301-01	5651
7-2585301-02	5642
7-2585303	5642
7-7340102	126
7-7466201	181
7A30	107
7A30(GE)	128
7A30(SHERWOOD)	123AP
7A31	107
7A31(GE)	128
7A31(SHERWOOD)	123AP
7A32	107
7A32(GE)	128
7A32(SHERWOOD)	128
7A35	192
7A35(GE)	128
7A995	128
7A995(GE)	128
7A995(SHERWOOD)	128
7A1011	128
7A1011(GE)	128
7A1011(SHERWOOD)	128
7B1	124
7B2	124
7B13	124
7B33	124
7B34	124
7B-3B1	169
7C1	5015A
7C1(ZENER)	5015A
7C2	124
7C3	124
7C13	192
7D	116
7D1	124
7D2	124
7D3	124
7D13	192
7D33	124
7D34	124
7D210	125
7D210A	125
7DK470	1V030
7E1	124
7E2	124
7E3	124
7E13	192
7F13	192
7G1	124
7G2	124
7G3	124
7G4	124
7G13	192
7K470	1V030
7K705M	113A
7L6-0105	175
7L6-0444-1(NPN)	196
7L6-0444-1(PNP)	197
7L6-0495-14	116
7L6-0531-2(NPN)	196
7L6-0531-1(NPN)	196
7L6-0531-1(PNP)	197
7L6-0531-2(PNP)	197
7L6-0531-19(NPN)	186
7L6-0531-19(PNP)	187
7MA60	116
7OR2S	5890
7SA15	160
7SB33E	102
7TB1	5491
7TB2	5483
7TB3	5484
7TB4	5507
7TB5	5528
7TB6	5496
7TB8	5531
7VM705M	113A
7X070	138A
7Z200	5105A
8.2(ZENER)	5016A
8.2B1	5016A
8.2Z(ZENER)	5016A
8.75VZENER	139A
8-0050100	123AP
8-0050300	103A
8-0050400	160
8-0050500	160
8-0050600	103A
8-0050700	121
8-0001300	125
8-0001400	125
8-005202	123AP
8-0053001	123AP
8-0060	100
8-0024-1	108
8-0024-2	108
8-0024-3	123
8-0104900	160
8-0105200	160
8-0105300	160
8-0205400	102A
8-0205600	102A
8-0062	102
8-00243	123AP
8-0338030	108
8-0338040	108
8-0051500	123AP
8-0051600	129
8-0052102	123AP
8-0052302	123AP
8-0052402	130
8-0052600	123AP
8-0052700	129
8-0052800	103A
8-0053300	128
8-0053400	123AP
8-0053600	108
8-0053702	130MP
8-0222631U	102A
8-0236400	102A
8-0236430	102A
8-0243900	102A
8-0318250	123AP
8-0337390	123AP
8-0339430	108
8-0339440	108
8-0383840	108
8-0383930	108
8-0383940	123AP
8-0389910	123AP
8-0389930	123AP
8-0414120	130
8-0414130	130
8-0421980	123AP
8-1	175
8-1(BENDIX)	175
8-4(BENDIX)	123AP
8-9V	5072A
8-22	116
8-25	116
8-28-044	74145
8-38	116
8-179-918-77	558
8-619-030-009	102A
8-619-030-016	102A
8-619-030-008	102A
8-619-030-012	116
8-619-030-014	102A
8-619-030-007	102A
8-619-030-015	131
8-619-030-017	102A
8-619-030-011	109
8-639-001-095	116
8-697-020-571	109
8-697-020-570	123AP
8-697-020-569	102A
8-697-020-568	102A
8-697-020-567	102A
8-710-222-21	116
8-712-600-00	109
8-719-000-28	5405
8-719-000-24	5404
8-719-026-11	110MP
8-719-100-07	5035A
8-719-100-35	5011A
8-719-100-72	5024A
8-719-100-30	5010A
8-719-100-43	5015A
8-719-100-68	5022A
8-719-100-65	5021A
8-719-100-38	5013A
8-719-100-29	5010A
8-719-100-76	5027A
8-719-100-64	5021A
8-719-100-80	5028A
8-719-100-22	5008A
8-719-100-56	5019A
8-719-100-37	5013A
8-719-100-55	5018A
8-719-101-03	5036A
8-719-101-04	5036A
8-719-101-14	5037A
8-719-101-61	5013A
8-719-101-67	5015A
8-719-101-58	5011A
8-719-101-39	5006A
8-719-101-38	5006A
8-719-101-89	5024A
8-719-101-80	5020A
8-719-101-82	5021A
8-719-102-4	5013A
8-719-102-89	5018A
8-719-102-57	5006A

PART NUMBER	NTE REPLACEMENT
8-719-102-74	5013A
8-719-102-68	5010A
8-719-102-64	5009A
8-719-102-90	5019A
8-719-102-99	5022A
8-719-102-47	5002A
8-719-102-58	5006A
8-719-102-70	5011A
8-719-102-91	5019A
8-719-102-71	5011A
8-719-102-88	5018A
8-719-102-72	5011A
8-719-102-69	5010A
8-719-102-67	5010A
8-719-102-76	5014A
8-719-102-61	5007A
8-719-102-60	5007A
8-719-102-73	5013A
8-719-103-06	5022A
8-719-103-09	5024A
8-719-103-16	5075A
8-719-103-11	5024A
8-719-106-07	5037A
8-719-109-93	5013A
8-719-109-85	5010A
8-719-109-86	5010T1
8-719-109-72	5007A
8-719-109-81	5009A
8-719-109-89	5011A
8-719-109-96	5013T1
8-719-109-90	5011A
8-719-109-74	5008A
8-719-109-92	5013A
8-719-109-84	5010A
8-719-109-97	5014A
8-719-109-88	5011A
8-719-109-68	5006A
8-719-110-61	5031A
8-719-110-16	5019A
8-719-110-33	5021A
8-719-110-17	5019A
8-719-110-34	5022A
8-719-110-52	5028A
8-719-110-72	5035A
8-719-110-13	5018A
8-719-110-78	5036A
8-719-110-49	5027A
8-719-110-48	5026A
8-719-110-31	5021A
8-719-111-07	5020A
8-719-112-24	5021A
8-719-112-25	5021A
8-719-113-07	5022A
8-719-113-25	5022A
8-719-115-26	5024A
8-719-118-07	5027A
8-719-122-03	605A
8-719-122-00	601
8-719-124-08	5081A
8-719-124-07	5031A
8-719-133-07	5005A
8-719-139-04	123AP
8-719-143-07	5008A
8-719-147-77	5009A
8-719-156-07	5011A
8-719-156-27	5011A
8-719-156-23	5011A
8-719-156-25	5011A
8-719-160-24	135A
8-719-160-84	5035A
8-719-160-44	5018A
8-719-162-07	5013A
8-719-168-07	5014A
8-719-175-07	5015A
8-719-175-26	5015A
8-719-182-25	5016A
8-719-190-00	5031A
8-719-191-07	5018A
8-719-200-01	116
8-719-200-02	116
8-719-205-10	116
8-719-217-33	152
8-719-300-07	5314
8-719-300-59	6240
8-719-300-33	580
8-719-300-45	116
8-719-300-38	552
8-719-300-11	607
8-719-300-65	558
8-719-300-76	552
8-719-300-91	116
8-719-300-70	506
8-719-301-64	506
8-719-301-18	125
8-719-302-06	552
8-719-302-00	552
8-719-302-43	587
8-719-303-21	552
8-719-304-63	125
8-719-305-07	5330
8-719-305-15	506
8-719-308-72	331
8-719-311-72	5330
8-719-311-31	552
8-719-312-61	552
8-719-312-10	580
8-719-312-62	552
8-719-320-31	506
8-719-320-11	506
8-719-331-31	552
8-719-400-18	595
8-719-422-21	110MP
8-719-500-01	5342
8-719-500-04	5332
8-719-500-34	156
8-719-501-34	156
8-719-502-20	5313
8-719-503-09	5315
8-719-503-06	5310
8-719-503-40	156
8-719-504-40	5314
8-719-508-01	5332
8-719-511-40	168
8-719-511-20	167
8-719-511-10	166
8-719-549-41	558
8-719-550-02	113A
8-719-713-93	612
8-719-768-71	612
8-719-800-43	3092
8-719-800-83	3041
8-719-800-34	125
8-719-801-70	506
8-719-801-71	506
8-719-812-41	3007
8-719-812-42	3011
8-719-812-43	3010
8-719-815-55	177
8-719-815-85	519
8-719-900-03	552
8-719-900-02	116
8-719-900-26	515
8-719-900-95	552
8-719-900-33	552
8-719-900-63	116
8-719-900-93	552
8-719-901-02	116
8-719-901-03	552
8-719-901-09	558
8-719-901-24	5457
8-719-901-39	506
8-719-901-58	580
8-719-901-83	177
8-719-901-92	552
8-719-901-93	552
8-719-901-94	552
8-719-901-95	552
8-719-901-98	3041
8-719-901-13	116
8-719-901-19	552
8-719-903-03	552
8-719-903-09	552
8-719-903-29	552
8-719-906-15	506
8-719-906-24	5081A
8-719-907-40	552
8-719-907-30	580
8-719-908-03	116
8-719-910-15	5020A
8-719-910-68	5013A
8-719-911-06	519
8-719-911-19	519
8-719-911-53	5806
8-719-911-54	156
8-719-911-55	5806
8-719-912-00	605A
8-719-912-54	156
8-719-913-54	5804
8-719-918-77	558
8-719-920-04	116
8-719-921-53	580
8-719-923-76	519
8-719-924-06	552
8-719-928-04	580
8-719-928-08	506
8-719-930-11	5074A
8-719-930-12	5021A
8-719-931-05	135A
8-719-931-08	5016A
8-719-931-10	5019A
8-719-931-11	5074A
8-719-931-12	142A
8-719-931-13	5022A
8-719-931-14	144A
8-719-931-15	145A
8-719-931-16	5075A
8-719-931-22	5080A
8-719-933-13	580
8-719-936-96	3098
8-719-937-08	5016A
8-719-937-10	140A
8-719-938-40	116
8-719-938-36	552
8-719-941-13	156
8-719-941-74	587
8-719-945-80	525
8-719-948-59	588
8-719-961-03	552
8-719-971-20	577
8-719-974-81	613
8-719-979-85	580
8-719-981-00	580
8-719-981-01	116
8-719-982-04	5800
8-721-323-00	158
8-722-381-20	312
8-722-383	312
8-722-923-00	107
8-723-302-00	312
8-723-304-00	312
8-723-650	103
8-724-034-00	107
8-724-733-30	123AP
8-725-030-26	15023
8-725-923-00	161
8-726-357-10	293
8-726-400-00	276
8-729-101-13	6402
8-729-101-31	6402
8-729-103-43	294
8-729-107-26	291
8-729-109-53	236
8-729-113-33	294
8-729-115-10	459
8-729-115-30	459
8-729-117-32	293
8-729-117-43	382
8-729-117-54	290A
8-729-118-76	165
8-729-119-78	2361
8-729-119-80	157
8-729-119-76	2362
8-729-122-01	374
8-729-122-02	374
8-729-122-03	374
8-729-132-22	379
8-729-133-40	379
8-729-133-53	379
8-729-137-32	377
8-729-139-04	123AP
8-729-140-98	293
8-729-140-97	294
8-729-140-96	382
8-729-140-50	399
8-729-167-42	107
8-729-168-82	157
8-729-169-01	373
8-729-169-02	373
8-729-173-13	374
8-729-173-37	290A
8-729-177-33	293
8-729-177-42	315
8-729-177-43	382
8-729-177-23	374
8-729-177-32	293
8-729-177-22	185
8-729-178-54	85
8-729-178-55	85
8-729-178-56	85
8-729-180-93	373
8-729-188-23	184
8-729-191-81	331
8-729-194-12	399
8-729-194-58	85
8-729-195-82	382
8-729-200-02	116
8-729-200-17	288
8-729-201-78	377
8-729-201-98	2302
8-729-201-96	85
8-729-201-62	2308
8-729-201-32	32
8-729-201-52	290A
8-729-202-03	291
8-729-202-53	2302
8-729-202-58	2302
8-729-203-05	459
8-729-203-04	459
8-729-203-80	2302
8-729-204-03	290A
8-729-204-91	290A
8-729-204-83	290A
8-729-209-03	399
8-729-210-52	290A
8-729-212-02	289A
8-729-212-12	399
8-729-213-02	399
8-729-213-01	287
8-729-213-12	399
8-729-213-11	399
8-729-216-22	2409
8-729-217-33	152
8-729-224-82	399
8-729-230-49	2408
8-729-231-60	377
8-729-231-95	2331
8-729-238-32	31
8-729-245-83	85
8-729-247-33	153
8-729-255-12	399
8-729-265-52	293
8-729-266-93	289A
8-729-271-02	289A
8-729-287-00	89
8-729-287-10	89
8-729-288-02	152
8-729-300-90	2300
8-729-301-56	2301
8-729-301-11	2301
8-729-301-46	399
8-729-304-62	383
8-729-304-92	374
8-729-304-50	2300
8-729-305-01	2300
8-729-305-42	451
8-729-306-92	373
8-729-307-82	373
8-729-308-72	331
8-729-309-08	90
8-729-309-06	90
8-729-309-36	91
8-729-311-42	943
8-729-313-42	291
8-729-313-82	375
8-729-316-12	152
8-729-316-16	152
8-729-322-78	171
8-729-323-82	375
8-729-326-10	399
8-729-326-82	292
8-729-326-11	157
8-729-331-53	196
8-729-334-58	199
8-729-336-11	398
8-729-341-34	165
8-729-345-41	162
8-729-345-42	162
8-729-354-52	199
8-729-361-12	152
8-729-364-12	85
8-729-364-81	374
8-729-366-81	373
8-729-372-31	198
8-729-372-51	165
8-729-372-52	238
8-729-374-02	383
8-729-377-58	90
8-729-377-12	332
8-729-378-82	293
8-729-378-84	293
8-729-378-91	315
8-729-378-92	315
8-729-383-03	36
8-729-386-12	398
8-729-390-06	89
8-729-395-70	89
8-729-395-73	89
8-729-398-09	89
8-729-400-81	377
8-729-400-82	377
8-729-420-00	276
8-729-423-37	2361
8-729-423-44	2362
8-729-447-53	158
8-729-468-43	294
8-729-600-08	458
8-729-600-27	85
8-729-600-28	85
8-729-600-21	2407
8-729-601-42	90
8-729-606-32	289A
8-729-609-06	85
8-729-609-42	234
8-729-612-77	85
8-729-633-47	85
8-729-634-03	459
8-729-635-82	291
8-729-652-82	292
8-729-663-43	123AP
8-729-663-47	85
8-729-663-48	85
8-729-665-47	289A
8-729-671-13	85
8-729-671-14	85
8-729-671-15	85
8-729-673-53	85
8-729-685-03	290A
8-729-800-35	2302
8-729-800-87	2302
8-729-801-22	382
8-729-801-71	2302
8-729-801-76	2302
8-729-802-50	2302
8-729-803-04	229
8-729-806-84	107
8-729-809-41	2331
8-729-821-87	2331
8-729-822-65	2324
8-729-831-33	152
8-729-853-63	85
8-729-866-93	289A
8-729-880-82	383
8-729-883-91	85
8-729-883-92	85
8-729-893-92	85
8-729-900-89	2359
8-729-900-61	2356
8-729-900-65	2360
8-729-901-04	2415
8-729-902-10	51
8-729-902-11	85
8-729-903-80	66
8-729-905-52	20
8-729-906-38	157
8-729-908-62	85
8-729-920-74	2408
8-729-922-69	2361
8-729-922-68	2362
8-729-925-02	379
8-729-927-12	11
8-729-931-43	379
8-729-965-22	18
8-729-967-32	20
8-729-976-71	379
8-729-978-62	159
8-729-982-22	21
8-729-984-70	373
8-729-988-12	383
8-729-993-72	17
8-729-37501	289
8-749-900-15	1871
8-749-901-35	15033
8-749-930-35	1743
8-749-933-35	15022
8-749-956-30	1732
8-749-958-30	1732
8-750-105-11	1096
8-751-350-00	1596
8-751-430-00	1582
8-751-720-00	1304
8-751-771-00	1306
8-752-030-26	15023
8-752-011-20	15007
8-759-000-49	4066B
8-759-040-53	4053B
8-759-040-46	980
8-759-013-06	960
8-759-013-09	966
8-759-100-07	1417
8-759-100-75	1678
8-759-101-60	1045
8-759-101-80	1293
8-759-103-93	943M
8-759-105-57	1417
8-759-105-56	1416
8-759-105-82	1676
8-759-110-31	1245
8-759-111-85	1293
8-759-113-78	1676
8-759-113-73	15004
8-759-113-63	1409
8-759-115-56	1416
8-759-132-40	987
8-759-133-90	834
8-759-140-01	4001B
8-759-140-29	4029B
8-759-140-66	4066B
8-759-140-53	4053B
8-759-140-11	4011B
8-759-140-69	4069
8-759-145-58	778A
8-759-145-27	1792
8-759-157-40	615P
8-759-157-41	615P
8-759-157-60	1185
8-759-170-08	964
8-759-171-05	960
8-759-178-05	977
8-759-178-12	950
8-759-240-01	4001B
8-759-240-66	4066B
8-759-240-11	4011B
8-759-240-13	4013B
8-759-240-16	4016B
8-759-240-27	4027B
8-759-240-81	4081B
8-759-240-30	4030B
8-759-240-51	4051B
8-759-240-52	4052B
8-759-240-69	4069
8-759-240-71	4071B
8-759-271-20	1087
8-759-276-30	1576
8-759-389-81	2061
8-759-400-88	1744
8-759-402-35	1782
8-759-424-00	712
8-759-425-00	712
8-759-600-95	1308
8-759-601-05	1308
8-759-601-95	1308
8-759-608-43	1308
8-759-610-95	1308
8-759-618-48	955S
8-759-619-03	1510
8-759-651-34	1096
8-759-651-35	1004
8-759-651-42	1096
8-759-684-78	1581
8-759-701-79	966
8-759-800-15	1377
8-759-800-65	1658
8-759-800-81	1781
8-759-800-12	1708
8-759-801-98	15002
8-759-803-29	1798
8-759-812-01	1003
8-759-812-40	1214
8-759-822-02	1855
8-759-833-61	1248
8-759-878-02	1539
8-759-878-03	1539
8-759-900-09	74LS09
8-759-900-86	74LS86
8-759-901-23	74LS123
8-759-901-38	74LS138
8-759-903-58	928M
8-759-903-86	823
8-759-904-69	4069
8-759-924-12	960
8-759-929-62	966
8-759-945-58	778A
8-759-980-58	1788
8-759-982-13	966
8-759-982-21	977
8-759-982-26	950
8-759-994-51	1674
8-760-335-10	293
8-760-343-10	293
8-760-413-10	315
8-760-514-10	294
8-760-523-10	294
8-761-622-00	289
8-762-020-00	288
8-762-110-00	287
8-762-112-00	382
8-762-210-00	288
8-763-113-00	306
8-763-314-00	306
8-764-803-00	236
8-765-170-01	287
8-765-300-00	229
8-765-401-00	108
8-765-422-00	312
8-765-500-00	291
8-765-510-00	292
8-769-132-00	458
8-769-194-00	312
8-769-200-30	451
8-795-145-58	778A
8-819-910-15	5020A
8-902-0706-071	123AP
8-905-013-759	116
8-905-013-760	116
8-905-013-752	116
8-905-014-008	118
8-905-014-017	123AP
8-905-198-001	116
8-905-198-004	116
8-905-198-005	116
8-905-198-007	116
8-905-198-008	116
8-905-198-010	116
8-905-198-034	116
8-905-305-020	109
8-905-305-007	109
8-905-305-055	109
8-905-305-023	110MP
8-905-305-004	110MP
8-905-305-330	109
8-905-305-318	109
8-905-305-342	109
8-905-305-348	109
8-905-305-336	109
8-905-305-338	109
8-905-305-580	109
8-905-305-635	109
8-905-305-405	109
8-905-305-400	116
8-905-305-327	109
8-905-305-339	109
8-905-305-555	109
8-905-305-561	109
8-905-313-011	109
8-905-313-007	110MP
8-905-313-018	110MP
8-905-313-010	109
8-905-313-008	110MP
8-905-313-100	109
8-905-313-101	109
8-905-313-120	109
8-905-405-002	116
8-905-405-077	109
8-905-405-026	116
8-905-405-098	177
8-905-405-069	116
8-905-405-134	116
8-905-405-146	116
8-905-405-160	125
8-905-405-170	125
8-905-405-105	125
8-905-405-206	116
8-905-405-838	109
8-905-406-020	177
8-905-413-092	116
8-905-421-239	145A
8-905-421-715	145A
8-905-421-315	150A
8-905-421-300	177
8-905-421-319	142A
8-905-421-109	136A
8-905-421-215	5069A
8-905-421-118	139A
8-905-421-128	145A
8-905-421-234	142A
8-905-421-228	139A
8-905-605-051	102A
8-905-605-016	102A
8-905-605-030	102A
8-905-605-032	102A
8-905-605-075	102A
8-905-605-090	102A
8-905-605-091	102A
8-905-605-050	102A
8-905-605-123	158
8-905-605-120	158
8-905-605-124	158
8-905-605-112	103A
8-905-605-266	158
8-905-605-255	158
8-905-605-230	102A
8-905-605-125	158
8-905-605-108	103A
8-905-605-268	158
8-905-605-128	158
8-905-605-908	127
8-905-605-269	158
8-905-605-126	158
8-905-605-129	158
8-905-605-109	103A
8-905-605-292	102A
8-905-605-232	102A
8-905-605-305	102A
8-905-605-127	158
8-905-605-320	160
8-905-605-264	158
8-905-605-365	103A
8-905-605-384	103A
8-905-605-390	103A
8-905-605-636	121
8-905-605-637	121
8-905-605-607	131
8-905-605-234	102A
8-905-605-111	103A
8-905-605-260	158
8-905-605-644	161
8-905-605-624	121
8-905-605-635	121
8-905-605-250	158
8-905-605-110	103A
8-905-605-113	103A
8-905-605-650	131
8-905-605-775	127
8-905-605-105	103A
8-905-606-003	160
8-905-606-008	160
8-905-606-010	160
8-905-606-016	160
8-905-606-001	160
8-905-606-051	160
8-905-606-075	160
8-905-606-077	160
8-905-606-090	160
8-905-606-007	160
8-905-606-180	160
8-905-606-351	160
8-905-606-211	160
8-905-606-360	160
8-905-606-225	160
8-905-606-375	160
8-905-606-390	160
8-905-606-391	160
8-905-606-241	160
8-905-606-392	160
8-905-606-255	160
8-905-606-158	160
8-905-606-405	160
8-905-606-419	160
8-905-606-420	160
8-905-606-423	160
8-905-606-168	160
8-905-606-720	121
8-905-606-256	160
8-905-606-750	102A
8-905-606-105	160
8-905-606-800	102A
8-905-606-349	160
8-905-606-815	102A
8-905-606-106	160
8-905-606-817	102A
8-905-606-120	160
8-905-606-350	160
8-905-606-885	102A
8-905-606-352	160
8-905-606-142	160
8-905-606-152	160
8-905-606-153	160
8-905-606-155	160
8-905-606-154	160
8-905-606-165	160
8-905-613-070	158
8-905-613-071	158
8-905-613-010	102A
8-905-613-015	103A
8-905-613-062	103A
8-905-613-265	131
8-905-613-132	158
8-905-613-150(PNP)	102A
8-905-613-266	131
8-905-613-282	131
8-905-613-160	158
8-905-613-283	131
8-905-613-210	121
8-905-613-284	131
8-905-613-215	121
8-905-613-295	127
8-905-613-555	131
8-905-613-640	102A
8-905-613-710	102A
8-905-613-232	127
8-905-613-240	131
8-905-613-241	131
8-905-613-242	131
8-905-613-955	102A
8-905-613-245	131
8-905-613-250	121
8-905-613-277	131
8-905-613-133	158
8-905-613-131	158
8-905-613-150(NPN)	103A
8-905-615-156	102A
8-905-705-112	123AP
8-905-705-403	123AP
8-905-705-405	123AP
8-905-705-410	128
8-905-706-044	161
8-905-706-055	161
8-905-706-060	161
8-905-706-067	171
8-905-706-068	171
8-905-706-070	161
8-905-706-071	161
8-905-706-075	161
8-905-706-080	161
8-905-706-010	171
8-905-706-257	123AP
8-905-706-202	123AP
8-905-706-555	130
8-905-706-203	123AP
8-905-706-260	123AP
8-905-706-556	130
8-905-706-263	123AP
8-905-706-280	159
8-905-706-245	123AP
8-905-706-246	123AP
8-905-706-238	123AP
8-905-706-206	123AP
8-905-706-208	123AP
8-905-706-247	159
8-905-706-239	123AP
8-905-706-250	123AP
8-905-706-286	159
8-905-706-255	159
8-905-706-256	159
8-905-706-557	130
8-905-706-287	159
8-905-706-240	123AP
8-905-706-242	123AP

PART NUMBER	NTE REPLACEMENT
8-905-706-215	123AP
8-905-706-606	123AP
8-905-706-730	161
8-905-706-244	123AP
8-905-706-288	159
8-905-706-790	160
8-905-706-211	123AP
8-905-706-801	184
8-905-706-251	159
8-905-706-253	159
8-905-706-289	159
8-905-706-235	123AP
8-905-706-101	161
8-905-706-290	159
8-905-706-104	123AP
8-905-706-336	123AP
8-905-706-110	161
8-905-706-545	129
8-905-706-254	159
8-905-706-236	123AP
8-905-706-901	133
8-905-706-112	161
8-905-706-201	123AP
8-905-707-254	123AP
8-905-707-265	123AP
8-905-707-313	123AP
8-905-713-058	159
8-905-713-101	130
8-905-713-110	184
8-905-713-556	130
8-905-713-810	129
8-1074	152
8-2409501	123AP
8-2410300	129
8-81250108	199
8-81250109	123AP
8/5228(PNP)	189
8A01	109
8A1002	172A
8A1003	172A
8A10521	131
8A10625	131
8A11083	131
8A11667	116
8A11721	131
8A12359	131
8A12789	123AP
8A12991	104
8A13164	131
8A13718	158
8AN10	5994
8AN20	5994
8AN30	5878
8AN40	5900
8AN100	5910
8C91	139A
8C145-01	218
8C200	159
8C201	159
8C202	159
8C203	159
8C204	159
8C205	159
8C206	159
8C207	159
8C430	159
8C430K	159
8C440	159
8C440K	159
8C443	159
8C443K	159
8C445	159
8C445K	159
8C449	159
8C449K	159
8C450	159
8C460	159
8C460K	159
8C463	159
8C463K	159
8C465	159
8C465K	159
8C466	159
8C466K	159
8C467	159
8C467K	159
8C468	159
8C468K	159
8C469	159
8C469K	159
8C470	159
8C470K	159
8C700	159
8C700A	159
8C700B	159
8C702	159
8C702A	159
8C702B	159
8C704	159
8C740	159
8C740G	159
8C740M	159
8C742	159
8C742G	159
8C742M	159
8C7400	159
8C7420	159
8CG15	116
8CG15RE	116
8D	160
8D4	116
8D6	116
8D8	125
8D10	125
8E	160
8E(AUTOMATIC)	126
8F	160
8F(AUTOMATIC)	126
8G7	125
8GA	125
8H303	121
8L	160
8L201	121
8L201B	121
8L201C	121
8L201R	121
8L201V	121
8L301V	104
8L404	121
8NA	113A
8P	160
8P2M	5463
8P70BLU	152
8P40	104
8P50S	131
8P73BLU	152
8P73GRN	152
8P73YEL	152
8P111	133
8P202	131
8P345	152
8P404	104
8P404B	121
8P404F	104
8P404M	121
8P404M-1	121
8P404N	121
8P4040RN	104
8P404R	121
8P404T	131
8P404V	121
8P415C	121
8P416C	121
8P445	153
8P505	131
8P880	105
8P880B	105
8P1555	179
8P9253	151A
8P-2	102A
8P-2-70	102A
8P-2-70-12	102A
8P-2-70-12-7	102A
8P-2A	102A
8P-2A0	102A
8P-2A0R	102A
8P-2A1	102A
8P-2A2	102A
8P-2A3	102A
8P-2A3P	102A
8P-2A4	102A
8P-2A4-7	102A
8P-2A4-7B	102A
8P-2A5	102A
8P-2A5L	102A
8P-2A6	102A
8P-2A6-2	102A
8P-2A7	102A
8P-2A7-1	102A
8P-2A8	102A
8P-2A9	102A
8P-2A9G	102A
8P-2A19	102A
8P-2A21	102A
8P-2A82	102A
8P-2A0	158
8P-2A0R	158
8P-20	102A
8P-21	102A
8P-22	102A
8P-23	102A
8P-24	102A
8P-25	102A
8P-26	102A
8P-27	102A
8P-28	102A
8P-29	102A
8P-404	104
8P-404R	121
8P-505	131
8PC60	121
8PS60	121
8Q-000003-11	234
8Q-3-01	199
8Q-3-02	106
8Q-3-04	103A
8Q-3-10	199
8Q-3-11	159
8Q-3-12	123AP
8Q-3-13	128
8Q-3-14	159
8Q-3-23	155
8Q-7-01	116
8Q-7-02	116
8Q-7-03	116
8RA-1Z	116
8RCM5	5501
8RCM20	5504
8RCV5	5501
8RCV20	5504
8S191A04	116
8T04A	5629
8T04HA	5629
8T14A	5629
8T14HA	5629
8T24A	5629
8T24HA	5629
8T34A	5629
8T34HA	5629
8T44A	5629
8T44HA	5629
8T96	6886
8V2	5122A
8Z9HA	5072A
9.1B	5018A
9.1B2	5018A
9.1B3	5018A
9.1N3	5018A
9.1Z	5018A
9.1Z(ZENER)	5018A
9.S011	102
9.S037	123AP
9-003	107
9-006	123AP
9-1B3	5018A
9-511	160
9-900-931-01	552
9-901-386-01	2402
9-901-499-01	588
9-901-504-01	1838
9-901-505-01	1781
9-901-507-01	1855
9-901-548-01	588
9-901-550-01	579
9-901-551-01	5306
9-905-606-001	160
9-5108	160
9-5110	160
9-5111	160
9-5112	101
9-5113	101
9-5114	101
9-5116	160
9-5117	160
9-5118	160
9-5119	160
9-5120	160
9-5120A	100
9-5121	160
9-5122	160
9-5123	160
9-5124	160
9-5125	108
9-5126	108
9-5127	108
9-5128	108
9-5129	108
9-5130	108
9-5131	108
9-5201	102A
9-5202	103A
9-5203	102A
9-5204	102A
9-5208	102A
9-5209	102A
9-5212	102A
9-5213	102A
9-5214	102A
9-5216	123AP
9-5217	102A
9-5218	102A
9-5220	128
9-5221	123AP
9-5222-1	102A
9-5222-2	103A
9-5223	108
9-5224-1	102A
9-5224-2	103A
9-5225	123AP
9-5226-003	129
9-5226-004	128
9-5226-1	129
9-5226-2	123AP
9-5226-3	129
9-5226-4	128
9-5227	123AP
9-5250	121
9-5250-1	121MP
9-5251	121
9-5252	124
9-5252-1	124
9-5252-2	124
9-5252-3	124
9-5252-4	124
9-5257	121MP
9-5296	123AP
9-9101	126
9-9102	126
9-9103	126
9-9104	102A
9-9105	160
9-9106	160
9-9107	160
9-9108	160
9-9109-1	123AP
9-9109-2	123AP
9-9120	160
9-9121	160
9-9201	102A
9-9202	102A
9-9203	102A
9-511141400	121
9-511410100	102A
9-511410200	102A
9-511410900	102A
9-511413500	102A
9-511511500	125
9A8-1A64	160
9A115180-2	126
9ACW	133
9D1	177
9D11	177
9D12	109
9D13	116
9D14	506
9D15	139A
9D15C	290A
9D16	109
9D141003-12	139A
9DI	177
9DI1	177
9DI2	109
9DI3	177
9DI5	139A
9DT1100310	109
9GR2	123AP
9H00DC	74H00
9H00PC	74H00
9H01DC	74H01
9H01PC	74H01
9H04DC	74H04
9H04PC	74H04
9H05DC	74H05
9H05PC	74H05
9H08DC	74H08
9H08PC	74H08
9H10DC	74H10
9H10PC	74H10
9H11DC	74H11
9H11PC	74H11
9H20DC	74H20
9H20PC	74H20
9H21DC	74H21
9H21PC	74H21
9H22	74H22
9H22DC	74H22
9H22PC	74H22
9H30DC	74H30
9H30PC	74H30
9H40DC	74H40
9H40PC	74H40
9H50DC	74H50
9H50PC	74H50
9H51DC	74H51
9H51PC	74H51
9H52DC	74H52
9H52PC	74H52
9H53DC	74H53
9H53PC	74H53
9H54DC	74H54
9H54PC	74H54
9H55DC	74H55
9H55PC	74H55
9H60DC	74H60
9H60PC	74H60
9H61DC	74H61
9H61PC	74H61
9H62DC	74H62
9H62PC	74H62
9H71DC	74H71
9H71PC	74H71
9H72DC	74H72
9H72PC	74H72
9H73DC	74H73
9H73PC	74H73
9H74DC	74H74
9H74PC	74H74
9H76DC	74H76
9H76PC	74H76
9H78DC	74H78
9H78PC	74H78
9H101DC	74H101
9H101PC	74H101
9H102DC	74H102
9H102PC	74H102
9H103DC	74H103
9H103PC	74H103
9H108DC	74H108
9H108PC	74H108
9L-4	102A
9L-4-70	102A
9L-4-70-12-7	102A
9L-4-70-12	102A
9L-4A	102A
9L-4A0	102A
9L-4A0R	102A
9L-4A1	102A
9L-4A2	102A
9L-4A3	102A
9L-4A3P	102A
9L-4A4	102A
9L-4A4-7	102A
9L-4A4-7B	102A
9L-4A5	102A
9L-4A5L	102A
9L-4A6	102A
9L-4A6-1	102A
9L-4A7	102A
9L-4A7-1	102A
9L-4A8	102A
9L-4A9	102A
9L-4A9G	102A
9L-4A19	102A
9L-4A21	102A
9L-4A82	102A
9L-40	102A
9L-41	102A
9L-42	102A
9L-43	102A
9L-44	102A
9L-45	102A
9L-46	102A
9L-47	102A
9L-48	102A
9L-49	102A
9LR2	113A
9LR2-1	113A
9LR2-3	113A
9LR2-24	113A
9LR2-S	113A
9LR2-S1	113A
9LR21	113A
9N00	7400
9N00DC	7400
9N00PC	7400
9N01DC	7401
9N01PC	7401
9N02	7402
9N02DC	7402
9N02PC	7402
9N03DC	7403
9N03PC	7403
9N04	7404
9N04DC	7404
9N04PC	7404
9N05DC	7405
9N05PC	7405
9N06	7406
9N06DC	7406
9N06PC	7406
9N07DC	7407
9N07PC	7407
9N08	7408
9N08DC	7408
9N08PC	7408
9N09DC	7409
9N09PC	7409
9N10	7410
9N10DC	7410
9N10PC	7410
9N11DC	7411
9N11PC	7411
9N12DC	7412
9N12PC	7412
9N13	7413
9N13DC	7413
9N13PC	7413
9N14DC	7414
9N14PC	7414
9N16DC	7416
9N16PC	7416
9N17DC	7417
9N17PC	7417
9N20DC	7420
9N20PC	7420
9N21DC	7421
9N21PC	7421
9N23DC	7423
9N23PC	7423
9N25DC	7425
9N25PC	7425
9N26DC	7426
9N26PC	7426
9N27	7427
9N27DC	7427
9N27PC	7427
9N30DC	7430
9N30PC	7430
9N32	7432
9N32DC	7432
9N32PC	7432
9N37DC	7437
9N37PC	7437
9N38DC	7438
9N39DC	7439
9N39PC	7439
9N40DC	7440
9N40PC	7440
9N50DC	7450
9N50PC	7450
9N51	7451
9N51DC	7451
9N51PC	7451
9N53DC	7453
9N53PC	7453
9N54DC	7454
9N54PC	7454
9N60DC	7460
9N60PC	7460
9N70DC	7470
9N70PC	7470
9N72DC	7472
9N72PC	7472
9N73	7473
9N73DC	7473
9N73PC	7473
9N74	7476
9N74DC	7474
9N74PC	7474
9N76	7476
9N76DC	7476
9N76PC	7476
9N86	7486
9N86DC	7486
9N86PC	7486
9N107DC	74107
9N107PC	74107
9N122DC	74122
9N122PC	74122
9N123	74123
9N123DC	74123
9N123PC	74123
9N132DC	74132
9N132PC	74132
9OC69-1	116
9RE1	116
9S00DC	74S00
9S00PC	74S00
9S03DC	74S03
9S03PC	74S03
9S04DC	74S04
9S04PC	74S04
9S05DC	74S05
9S05PC	74S05
9S011	102A
9S037	123AP
9S10DC	74S10
9S10PC	74S10
9S11DC	74S11
9S11PC	74S11
9S15DC	74S15
9S15PC	74S15
9S20DC	74S20
9S20PC	74S20
9S22DC	74S22
9S22PC	74S22
9S40DC	74S40
9S40PC	74S40
9S64DC	74S64
9S64PC	74S64
9S65DC	74S65
9S65PC	74S65
9S74DC	74S74
9S74PC	74S74
9S112DC	74S112
9S112PC	74S112
9S113DC	74S113
9S113PC	74S113
9S114DC	74S114
9S114PC	74S114
9S133DC	74S133
9S133PC	74S133
9S134DC	74S134
9S134PC	74S134
9S140DC	74S140
9S140PC	74S140
9TR1	107
9TR2	123AP
9TR3	199
9TR4	195A
9TR5	237
9TR6	195A
9TR7	123AP
9TR8	152
9TR9	289
9TR10	123AP
9TR11	195A
9TR11001-01	107
9TR21001-02	123AP
9TR31001-03	123AP
9TR61001-07	128
9TR91001-09	130
9TRZ1001-02	123AP
10	5329
10-080009	108
10-085001	109
10-085004	110MP
10-085005	177
10-085006	116
10-085009	116
10-080010	123AP
10-0007	235
10-0009	186A
10-001	1254
10-002	229
10-003	199
10-004	312
10-004IC	1192
10-005	1249
10-006	295
10-007	235
10-008	289
10-010	177
10-010IC	964
10-085010	116
10-085013	614
10-085014	109
10-085018	109
10-085025	109
10-085026	116
10-085027	135A
10-085030	116
10-012	116
10-013	139A
10-015	614
10-016	136A
10-1	161
10-2	161
10-2SA49	126
10-2SB54	102A
10-2SB56	102A
10-2SC80	108
10-2SC94	108
10-2SC380	107
10-7	116
10-12	116
10-13-002-004	130
10-13-002-003	130
10-13-002-3	130
10-13-002-4	130
10-13I59-002	175
10-26-123-313	152
10-42	116
10-3159-002	175
10-10112	177
10-13002-003	130
10-13002-004	130
10-13030-004	181
10-13030-005	181
10-13159-002	175
10-47674-01	722
10-102005	125
10-374101	130
10-D1	116
10-I3002-004	130
10A	160
10A590B	116
10AG2	116
10AG4	116
10AG6	116
10AG8	125
10AG10	125
10AL2	116
10AL6	116
10AS	116
10AT2	116
10AT4	116
10AT6	116
10AT8	125
10AT10	125
10B	160
10B1	5019A
10B1(ZENER)	5019A
10B1ZENER	5018A
10B2	5019A
10B2(ZENER)	5019A
10B2-B1W	166
10B3	116
10B3(1W-ZENER)	140A
10B3(ZENER)	5019A
10B4	5804
10B5	5805
10B6	5806
10B8	125
10B10	156
10B62	140A
10B551	108
10B551-2	161
10B551-3	161
10B553	108
10B553-2	161
10B553-3	161
10B555	108
10B555-2	108
10B555-3	108
10B556	108
10B556-2	108
10B556-3	108
10B1051	108
10B1055	108
10B-2	116
10B-2-B1W	116
10B-2-N1W	116
10B-4	120
10B-4-C4	120
10B-Y	116
10C	116
10C05	116
10C1	116
10C2	116
10C3	116
10C4	116
10C4D	116
10C5	116
10C6	116
10C8	125
10C10	125
10C573	108
10C573-2	161
10C573-3	161
10C574	108
10C574-2	161
10C574-3	161
10D	5019T1
10D0.5	116
10D05	116
10D06	5804
10D08	5072A
10D1	552
10D1-1	116
10D2	116
10D2(CROWN)	506
10D2(DAMPER)	506
10D2L	506
10D3	116
10D3G	116
10D4	125
10D4A	552
10D4B	552
10D4C	116
10D4D	116
10D4E	116
10D4L	506
10D5	116
10D5A	506
10D5B	116
10D5C	116
10D5D	506
10D5E	116
10D5F	116
10D6	116
10D6D	116
10D6E	116
10D7	125
10D7F	125
10D8	125
10D9K	116
10D10	125
10D(ZENER)	5019T1
10D-02	116
10D-05	116
10D-06	116
10D-1	116
10D-2	552
10D-2(CROWN)	506
10D-2B	506
10D-2B(4)	116
10D-2B(-4)	116

PART NUMBER	NTE REPLACEMENT
10D-2B-4	116
10D-4	125
10D-5	506
10D-6	116
10D-7K	125
10D-V	116
10DB	116
10DB1	166
10DB2A	167
10DB2P	168
10DB4	168
10DB4A	168
10DB4P	169
10DB6	169
10DB6A	168
10DB6A-C	168
10DB6P	5305
10DB8	170
10DB10	170
10DBF	116
10DC	116
10DC0.5	116
10DC0B	116
10DC0H	116
10DC05(RED)	116
10DC05N	113A
10DC05R	116
10DC1	116
10DC1(BLACK)	116
10DC1(RED)	116
10DC1BLACK	116
10DC1R	116
10DC2	116
10DC2F	116
10DC4	116
10DC4R	116
10DC5	116
10DC8	125
10DC8R	125
10DC-1	116
10DC-1(SANYO)	135A
10DC-1N	113A
10DC-1R	115
10DC-2	156
10DC-2B	116
10DC-2C	116
10DC-2F	116
10DC-2J	116
10DC-4	116
10DC-4R	116
10DC-4R-202	116
10DC05R	116
10DC0.5	116
10DC0B	116
10DC0H	116
10DG	116
10DI	125
10DO.5	116
10DQ03	116
10DR1R	116
10DRV	116
10DV	116
10DX2	116
10DZ	116
10E1	116
10E1LF	116
10E2	116
10E2-TA2B	116
10E2V	552
10E4	116
10E4A	519
10E4B	519
10E6	116
10E10	125
10E10(FA-8)	125
10E10FA-8	125
10E10P	116
10E-1	116
10E-2	116
10E-4D	116
10E-7L	116
10EB1	140A
10ELS4	552
10ELS4-TA-1	552
10ELS6	552
10F5	5852
10F10	5916
10F15	5916
10F20	5916
10F30	5920
10F40	5920
10FCRA	314
10FCRB	314
10FCRC	314
10FCRD	314
10FCRE	314
10FCRF	314
10FCRG	314
10FCRH	314
10G4	125
10G1051	108
10G1052	108
10GA	125
10GC11	5920
10GD11	5920
10H	116
10H3	5874
10H3P	5852
10H3PN	5853
10H551	108
10H553	108
10H1051	108
10H1053	108
10HB05	5322
10HB10	5322
10HB20	5322
10HB40	5324
10HB60	5326
10HB80	5327
10HB100	5328
10I10	125
10J2	116
10J2F	116
10J3P	5872
10JH3	6050
10K	116
10K80	505
10K241U	2V150
10K-1	116
10M	116
10M10	5982
10M17Z	5193A
10M17Z5	5193A
10M17Z10	5193A
10M20	5986
10M25Z	5199A
10M25Z5	5199A
10M25Z10	5199A
10M30	5988
10M40	5990
10M50	5992
10M60	5994
10M80	5998
10M100	6002
10N1	116
10N2	5874
10N2(ZENER)	5019A
10N3	5019A
10N3(ZENER)	5019A
10O-202	109
10P1	159
10P1A	159
10P1S	5522
10P2	5874
10P2S	5524
10P3	5874
10P3S	5526
10P4S	5527
10P5S	5528
10P6S	5529
10P8S	5531
10PCRA	5514
10PCRB	5514
10PCRD	5514
10PCRE	5514
10PCRF	5515
10PCRG	5515
10PCRI	5516
10PCRJ	5516
10PCRSA	5562
10PCRSB	5562
10PCRSC	5562
10PCRSD	5562
10PCRSE	5562
10PCRSF	5564
10PCRSG	5564
10PCRSH	5564
10PCRSI	5566
10PCRSJ	5566
10PZ6.8	5181A
10PZ6.8A	5181A
10PZ6.8B	5181A
10PZ6.8C	5181A
10PZ6.8D	5181A
10PZ7.5	5182A
10PZ7.5A	5182A
10PZ7.5B	5182A
10PZ7.5C	5182A
10PZ7.5D	5182A
10PZ8.2	5183A
10PZ8.2A	5183A
10PZ8.2B	5183A
10PZ8.2C	5183A
10PZ8.2D	5183A
10PZ9.1	5185A
10PZ9.1A	5185A
10PZ9.1B	5185A
10PZ9.1C	5185A
10PZ9.1D	5185A
10PZ10	5186A
10PZ10A	5186A
10PZ10B	5186A
10PZ10C	5186A
10PZ10D	5186A
10PZ11	5187A
10PZ11A	5187A
10PZ11B	5187A
10PZ11C	5187A
10PZ11D	5187A
10PZ12	5188A
10PZ12A	5188A
10PZ12B	5188A
10PZ12C	5188A
10PZ12D	5188A
10PZ13	5189A
10PZ13A	5189A
10PZ13B	5189A
10PZ13C	5189A
10PZ13D	5189A
10PZ14	5190A
10PZ14A	5190A
10PZ14B	5190A
10PZ14C	5190A
10PZ14D	5190A
10PZ15	5191A
10PZ15A	5191A
10PZ15B	5191A
10PZ15C	5191A
10PZ15D	5191A
10PZ16	5192A
10PZ16A	5192A
10PZ16B	5192A
10PZ16C	5192A
10PZ16D	5192A
10PZ18	5194A
10PZ18A	5194A
10PZ18B	5194A
10PZ18C	5194A
10PZ18D	5194A
10PZ20	5196A
10PZ20A	5196A
10PZ20B	5196A
10PZ20C	5196A
10PZ20D	5196A
10PZ22	5197A
10PZ22A	5197A
10PZ22B	5197A
10PZ22C	5197A
10PZ22D	5197A
10PZ24	5198A
10PZ24A	5198A
10PZ24B	5198A
10PZ24C	5198A
10PZ24D	5198A
10PZ27	5200A
10PZ27A	5200A
10PZ27B	5200A
10PZ27C	5200A
10PZ27D	5200A
10PZ30	5202A
10PZ30A	5202A
10PZ30B	5202A
10PZ30C	5202A
10PZ30D	5202A
10PZ33	5203A
10PZ33A	5203A
10PZ33B	5203A
10PZ33C	5203A
10PZ33D	5203A
10PZ36	5204A
10PZ36A	5204A
10PZ36B	5204A
10PZ36C	5204A
10PZ36D	5204A
10PZ39	5208A
10PZ39A	5208A
10PZ39B	5208A
10PZ39C	5208A
10PZ39D	5208A
10PZ43	5206A
10PZ43A	5206A
10PZ43B	5206A
10PZ43C	5206A
10PZ43D	5206A
10PZ47	5208A
10PZ47A	5208A
10PZ47B	5208A
10PZ47C	5208A
10PZ47D	5208A
10PZ51	5210A
10PZ51A	5210A
10PZ51B	5210A
10PZ51C	5210A
10PZ51D	5210A
10PZ56	5212A
10PZ56A	5212A
10PZ56B	5212A
10PZ56C	5212A
10PZ56D	5212A
10PZ68	5215A
10PZ68A	5215A
10PZ68B	5215A
10PZ68C	5215A
10PZ68D	5215A
10PZ75	5216A
10PZ75A	5216A
10PZ75B	5216A
10PZ75C	5216A
10PZ75D	5216A
10PZ82	5217A
10PZ82A	5217A
10PZ82B	5217A
10PZ82C	5217A
10PZ82D	5217A
10PZ91	5219A
10PZ91A	5219A
10PZ91B	5219A
10PZ91C	5219A
10PZ91D	5219A
10PZ100	5220A
10PZ100A	5220A
10PZ100B	5220A
10PZ100C	5220A
10PZ100D	5220A
10PZ110	5222A
10PZ110A	5222A
10PZ110B	5222A
10PZ110C	5222A
10PZ110D	5222A
10PZ120	5223A
10PZ120A	5223A
10PZ120B	5223A
10PZ120C	5223A
10PZ120D	5223A
10PZ130	5224A
10PZ130A	5224A
10PZ130B	5224A
10PZ130C	5224A
10PZ130D	5224A
10PZ150	5226A
10PZ150A	5226A
10PZ150B	5226A
10PZ150C	5226A
10PZ150D	5226A
10PZ160	5227A
10PZ160A	5227A
10PZ160B	5227A
10PZ160C	5227A
10PZ160D	5227A
10PZ180	5230A
10PZ180A	5230A
10PZ180B	5230A
10PZ180C	5230A
10PZ180D	5230A
10PZ200	5232A
10PZ200A	5232A
10PZ200B	5232A
10PZ200C	5232A
10PZ200D	5232A
10Q3	5942
10R1B	116
10R2	5913
10R2B	116
10R3B	116
10R4B	116
10R5B	116
10R6B	116
10R7B	125
10R8B	125
10R9B	125
10R10B	125
10R11B	506
10R12B	506
10R13B	506
10R14B	506
10RC2	5500
10RC2A	5500
10RC5	5500
10RC5A	5500
10RC10	5544
10RC10A	5522
10RC15	5503
10RC15A	5523
10RC20	5504
10RC20A	5524
10RC25	5505
10RC25A	5544
10RC30	5506
10RC30A	5526
10RC40	5507
10RC40A	5527
10RC50	5508
10RC50A	5528
10RC60	5529
10RC60A	5529
10RC70	5530
10RC70A	5530
10RC80	5531
10RC80A	5531
10RZ6.8	5181A
10RZ6.8A	5181A
10RZ6.8B	5181A
10RZ6.8C	5181A
10RZ7.5	5182A
10RZ7.5A	5182A
10RZ7.5B	5182A
10RZ7.5C	5182A
10RZ7.5D	5182A
10RZ8.2	5183A
10RZ8.2A	5183A
10RZ8.2B	5183A
10RZ8.2C	5183A
10RZ8.2D	5183A
10RZ9.1	5185A
10RZ9.1A	5185A
10RZ9.1B	5185A
10RZ9.1C	5185A
10RZ9.1D	5185A
10RZ10	5186A
10RZ10A	5186A
10RZ10B	5186A
10RZ10C	5186A
10RZ10D	5186A
10RZ11	5187A
10RZ11A	5187A
10RZ11B	5187A
10RZ11C	5187A
10RZ11D	5187A
10RZ12	5188A
10RZ12A	5188A
10RZ12B	5188A
10RZ12C	5188A
10RZ12D	5188A
10RZ13	5189A
10RZ13A	5189A
10RZ13B	5189A
10RZ13C	5189A
10RZ13D	5189A
10RZ15	5191A
10RZ15A	5191A
10RZ15B	5191A
10RZ15C	5191A
10RZ15D	5191A
10RZ16	5192A
10RZ16A	5192A
10RZ16B	5192A
10RZ16C	5192A
10RZ16D	5192A
10RZ18	5194A
10RZ18A	5194A
10RZ18B	5194A
10RZ18C	5194A
10RZ18D	5194A
10RZ20	5196A
10RZ20A	5196A
10RZ20B	5196A
10RZ20C	5196A
10RZ20D	5196A
10RZ22	5197A
10RZ22A	5197A
10RZ22B	5197A
10RZ22C	5197A
10RZ22D	5197A
10RZ24	5198A
10RZ24A	5198A
10RZ24B	5198A
10RZ24C	5198A
10RZ24D	5198A
10RZ27	5200A
10RZ27A	5200A
10RZ27B	5200A
10RZ27C	5200A
10RZ27D	5200A
10RZ30	5202A
10RZ30A	5202A
10RZ30B	5202A
10RZ30C	5202A
10RZ30D	5202A
10RZ33	5203A
10RZ33A	5203A
10RZ33B	5203A
10RZ33C	5203A
10RZ33D	5203A
10RZ36	5204A
10RZ36A	5204A
10RZ36B	5204A
10RZ36C	5204A
10RZ36D	5204A
10RZ39	5208A
10RZ39A	5208A
10RZ39B	5208A
10RZ39C	5208A
10RZ39D	5208A
10RZ47	5208A
10RZ47A	5208A
10RZ47B	5208A
10RZ47C	5208A
10RZ47D	5208A
10RZ51	5210A
10RZ51A	5210A
10RZ51B	5210A
10RZ51C	5210A
10RZ51D	5210A
10RZ56	5212A
10RZ56A	5212A
10RZ56B	5212A
10RZ56C	5212A
10RZ56D	5212A
10RZ68	5215A
10RZ68A	5215A
10RZ68B	5215A
10RZ68C	5215A
10RZ68D	5215A
10RZ75	5216A
10RZ75A	5216A
10RZ75B	5216A
10RZ75C	5216A
10RZ75D	5216A
10RZ82	5217A
10RZ82A	5217A
10RZ82B	5217A
10RZ82C	5217A
10RZ82D	5217A
10RZ91	5219A
10RZ91A	5219A
10RZ91B	5219A
10RZ91C	5219A
10RZ91D	5219A
10RZ100	5220A
10RZ100A	5220A
10RZ100B	5220A
10RZ100C	5220A
10RZ100D	5220A
10RZ110	5222A
10RZ110A	5222A
10RZ110B	5222A
10RZ110C	5222A
10RZ110D	5222A
10RZ120	5223A
10RZ120A	5223A
10RZ120B	5223A
10RZ120C	5223A
10RZ120D	5223A
10RZ130	5224A
10RZ130A	5224A
10RZ130B	5224A
10RZ130C	5224A
10RZ130D	5224A
10RZ150	5226A
10RZ150A	5226A
10RZ150B	5226A
10RZ150C	5226A
10RZ150D	5226A
10RZ160	5227A
10RZ160A	5227A
10RZ160B	5227A
10RZ160C	5227A
10RZ160D	5227A
10RZ180	5230A
10RZ180A	5230A
10RZ180B	5230A
10RZ180C	5230A
10RZ180D	5230A
10RZ200	5232A
10RZ200A	5232A
10RZ200B	5232A
10RZ200C	5232A
10RZ200D	5232A
10T200	116
10TB1	5502
10TB2	5504
10TB3	5506
10TB4	5507
10TB5	5528
10TB6	5529
10TB7	5530
10TB8	5531
10V	140A
10V(2 WATT)	5125A
10VB20	5314
10VJ	140A
10VZENER	140A
10Y	5019A
10Z3.9M	5174A
10Z3.9T5	5174A
10Z3.9T10	5174A
10Z3.9T20	5174A
10Z4.3T5	5175AK
10Z4.3T10	5175AK
10Z4.3T20	5175AK
10Z4.7M	5176A
10Z4.7T5	5176A
10Z4.7T10	5176A
10Z4.7T20	5176A
10Z5.1T5	5177A
10Z5.1T10	5177A
10Z5.1T20	5177A
10Z5.6M	5178A
10Z5.6T5	5176A
10Z5.6T20	5176A
10Z5.6T10	5176A
10Z6.2T5	180
10Z6.2T10	180
10Z6.2T20	180
10Z6.8M	5181A
10Z6.8T5	5181A
10Z6.8T20	5181A
10Z6.8T10	5181A
10Z7.5T5	5182A
10Z7.5T20	5182A
10Z7.5T10	5182A
10Z8.2M	5183A
10Z8.2T5	5183A
10Z8.2T20	5183A
10Z8.2T10	5183A
10Z9.1T5	5185A
10Z9.1T10	5185A
10Z9.1T20	5185A
10Z10	5186A
10Z10M	5186A
10Z10T5	5186A
10Z10T10	5186A
10Z10T20	5186A
10Z11T5	5187A
10Z11T10	5187A
10Z11T20	5187A
10Z12	5188A
10Z12M	5188A
10Z12T5	5188A
10Z12T10	5188A
10Z12T20	5188A
10Z13T5	5189A
10Z13T10	5189A
10Z13T20	5189A
10Z15M	5191A
10Z15T5	5191A
10Z15T10	5191A
10Z15T20	5191A
10Z16T5	5192A
10Z16T10	5192A
10Z16T20	5192A
10Z18M	5194A
10Z18T10	5194AK
10Z18T20	5194AK
10Z20T5	5196A
10Z20T10	5196A
10Z20T20	5196AK
10Z22M	5197A
10Z22T5	5197A
10Z22T10	5197A
10Z22T20	5197A
10Z24T5	5198A
10Z24T10	5198A
10Z24T20	5198A
10Z27M	5200A
10Z27T5	5200A
10Z27T10	5200A
10Z27T20	5200A
10Z30T5	5202A
10Z30T20	5202A
10Z33T5	5203A
10Z33T10	5203A
11	5009A
11-0400	121
11-085001	109
11-085003	116
11-085004	109
11-085005	109
11-085007	109
11-085008	109
11-0430	177
11-085010	123AP
11-085012	177
11-085013	116
11-085014	109
11-085015	109
11-085022	109
11-085024	116
11-0770	185
11-0399	121
11-0422	123AP
11-0423	172A
11-0429	116
11-0769	116
11-0771	116
11-0772	184
11-0773	185
11-0774	123AP
11-0775	46
11-0778	123AP
11-0781	177
11-9-156438	519
11-60	988
11-102-001	166
11-113	1192
11-1501	196
11-1502	242
11-1503	182
11-1592	116
11-11911-1	181
11-27070	199
11-102001	116
11-102003	166
11-108002	166
11-120007	116
11-691501	234
11-691502	234
11-691504	159
11-B	5009A
11-D	5019A
11/1	177
11/1 + 12/1	116
11/1&12/1	116
11/10	506
11/15	116
11/1592	116
11A1	5019T1
11B	5009A
11B1	5019T1
11B1(ZENER)	5019T1
11B2	5020A
11B2(ZENER)	5020A
11B3	5020A
11B3(ZENER)	5020A
11B551	108
11B551-2	199
11B551-3	199
11B552	108
11B552-2	199
11B552-3	199
11B554	108
11B554-2	199
11B554-3	199
11B555	108
11B555-2	199
11B555-3	199
11B556	192
11B556-2	194
11B556-3	194
11B560	192
11B560-2	194
11B560-3	194
11B1052	108
11B1055	108
11B1257	194
11B1258	194
11B1259	194
11B1260	194
11B(ZENER)	5020A
11C1B1	124
11C3B1	124
11C3B3	124
11C5B1	124
11C7B1	124
11C10B1	124
11C11B1	124
11C11B20	224
11C44	974
11C211B20	192
11C551	108
11C551-2	199
11C551-3	199
11C553	108
11C553-2	199
11C553-3	199
11C557	108
11C557-2	161
11C557-3	161
11C702	293
11C1051	108
11C1053	108
11C1057	108
11C1536	128
11DQ03	585
11DQ04	585
11E1	116
11E1TA1	116
11E1TA1-T	116
11E2	116
11E2TA1	116
11E2TA-1	116
11ES1	116
11F1SC	5873
11F2SC	5875
11F3SC	5877
11G1052	161
11G1053	161
11J2	116
11J2F	116
11N1	5020A
11N267	109
11R05S	5870
11R055	5874
11R1S	5872
11R1SC	5872
11R2S	5874
11R2SC	5874
11R3S	5876

PART NUMBER	NTE REPLACEMENT
11R3SC	5876
11R4S	5878
11R5S	5880
11R6S	5882
11R8S	5886
11R10S	5890
11R45	5878
11R105	5890
11R106	124
11RT1	106
11T4	5453
11T4S	5453
11Y	5020A
11Z1A	5019T1
11Z1B	5019T1
11Z1C	5019T1
11Z6AF	5066A
11Z6F	5066A
12-087003	109
12-087004	177
12-085005	109
12-085006	109
12-085009	109
12-085029	109
12-085031	116
12-085034	109
12-085035	109
12-085038	109
12-085040	116
12-085041	110MP
12-1	154
12-1-70	123AP
12-1-70-12-7	123AP
12-1-70-12	123AP
12-1-73	100
12-1-74	100
12-1-75	100
12-1-76	100
12-1-78	100
12-1-83	100
12-1-91	100
12-1-92	100
12-1-93	100
12-1-95	102A
12-1-96	102A
12-1-100	100
12-1-102	100
12-1-103	100
12-1-104	100
12-1-105	100
12-1-106	102A
12-1-107	102A
12-1-120	102A
12-1-128	100
12-1-135	160
12-1-137	160
12-1-138	160
12-1-139	160
12-1-148	102A
12-1-150	160
12-1-157	160
12-1-161	100
12-1-162	100
12-1-164	102A
12-1-179	100
12-1-180	100
12-1-184	102A
12-1-186	100
12-1-189	126
12-1-190	160
12-1-191	102A
12-1-226	102A
12-1-227	102A
12-1-228	160
12-1-229	160
12-1-230	160
12-1-231	160
12-1-232	102A
12-1-233	160
12-1-234	100
12-1-235	100
12-1-236	100
12-1-240	100
12-1-241	100
12-1-242	126
12-1-243	126
12-1-244	126
12-1-246	102A
12-1-254	100
12-1-256	160
12-1-257	126
12-1-258	160
12-1-259	160
12-1-260	160
12-1-266	102A
12-1-267	102A
12-1-270	121
12-1-271	121
12-1-272	102A
12-1-273	100
12-1-274	102A
12-1-275	100
12-1-276	123AP
12-1-277	123AP
12-1-278	123AP
12-1-279	123AP
12-1-289	100
12-1A	123AP
12-1A0	123AP
12-1A0R	123AP
12-1A1	123AP
12-1A2	123AP
12-1A3	123AP
12-1A3P	123AP
12-1A4	123AP
12-1A4-7B	123AP
12-1A4-7	123AP
12-1A5	123AP
12-1A5L	123AP
12-1A6	123AP
12-1A6A	123AP
12-1A7	123AP
12-1A7-1	123AP
12-1A8	123AP
12-1A9	123AP
12-1A9G	123AP
12-1A19	123AP
12-1A21	123AP
12-1A82	123AP
12-1AO	123AP
12-1AOR	123AP
12-2	225
12-4	123AP
12-10	123AP
12-11	123AP
12-12	123AP
12-13	123AP
12-14	123AP
12-15	123AP
12-16	123AP
12-17	123AP
12-18	123AP
12-19	123AP
12-21-050	234
12-975A	123AP
12-23163-3	229
12-28471-1(PLASTIC)	188
12-100001	116
12-100003	116
12-100008	116
12-100027	129
12-100047	130
12-101001	123AP
12-102001	116
12-200009	177
12-679115-01	5547
12-680701-05	5547
12-CAM	159
12-PG 01	234
12-PG-01	234
12/1	113A
12/1N	115
12/1N10	178MP
12/3	113A
12/3-04	113A
12/100	113A
12A	5023A
12A1	5021T1
12A1(ZENER)	5021T1
12A2	5021T1
12A2(ZENER)	5021T1
12A3	5021T1
12A700	5886
12A800	5886
12A900	5890
12A1000	5890
12A1027-P5	177
12A6240	100
12A7239P1	102
12A9244-1	160
12A9244-P2	160
12A9275	102
12A9275-1	102
12A(ZENER)	5021A
12AA2	101
12AL240	100
12B	5021A
12B1	142A
12B1(1WATT)	142A
12B2	142A
12B2.5W	5021A
12B2(.5W)	5021A
12B2(ZENER)	142A
12B3(ZENER 1WATT)	142A
12B3(ZENER)	5021A
12B(1WATT)	142A
12B(ZENER)	5021A
12B-2	116
12B-2-BIP-M	125
12B-2B1P-M	116
12BG11	5916
12BH11	6007
12C05	5870
12C05R	5871
12C1	5022A
12C2	5021A
12C2(ZENER)	5021A
12C2P-114	166
12C5Y	142A
12C70R	5891
12C10	5872
12C10R	5873
12C15	5874
12C15R	5875
12C20	5874
12C20R	5875
12C30	5876
12C30R	5877
12C40	5876
12C40R	5879
12C50	5880
12C50R	5881
12C60	5882
12C60R	5883
12C70	5886
12C70R	5887
12C80	5886
12C80R	5887
12C90	5890
12C90R	5891
12C100	5890
12C100R	5891
12CC12	5916
12CD12	5916
12CF11	5887
12CG11	5920
12CLN	123AP
12CTQ030	6085
12CTQ040	6085
12CTQ035	6085
12CTQ045	6085
12CZP-114	116
12DG11	5916
12DH11	6007
12F5	5870
12F5A	5870
12F5B	5870
12F10	5872
12F10A	5872
12F10B	5872
12F15	5874
12F15A	5874
12F15B	5874
12F20	5874
12F20A	5874
12F20B	5874
12F30	5876
12F30A	5876
12F30B	5876
12F40	5878
12F40A	5878
12F40B	5878
12F50	5880
12F50A	5880
12F50B	5880
12F60	5882
12F60A	5882
12F60B	5882
12F70B	5886
12F80	5886
12F80A	5886
12F80B	5886
12F90	5890
12F90A	5890
12F90B	5890
12F100	5890
12F100A	5890
12F100B	5890
12FC12	5920
12FD12	5920
12FG11	5920
12FH05S	5912
12FH1S	5916
12FH2S	5916
12FH3S	5920
12FH4S	5920
12FR5	5871
12FR5A	5871
12FR5B	5871
12FR10	5873
12FR10A	5873
12FR10B	5873
12FR15	5875
12FR15A	5875
12FR15B	5875
12FR20	5875
12FR20A	5875
12FR20B	5875
12FR30	5877
12FR30A	5877
12FR30B	5877
12FR40	5879
12FR40A	5879
12FR40B	5879
12FR50	5881
12FR50A	5881
12FR50B	5881
12FR60	5883
12FR60A	5883
12FR60B	5883
12FR70B	5887
12FR80	5887
12FR80A	5887
12FR80B	5887
12FR90	5891
12FR90A	5891
12FR90B	5891
12FR100	5891
12FR100A	5891
12FR100B	5891
12G4	506
12GC11	5878
12GG11	5920
12GH11	6009
12J2	116
12J2F	116
12JC11	5882
12JH11	6011
12LC11	5886
12LF11	5887
12M2	121
12MC	160
12MH92012A	1676
12MZ	160
12NC11	5890
12NF11	5891
12P2	177
12PR40B	5879
12PR60B	5883
12RCM5	5521
12RCM10	5522
12SZ-EQB01-12A	142A
12V	142A
12X	5021A
12X047	123AP
12Y	5021A
12Y(ZENER)	5021A
12Z	5021A
12Z6F	134A
12Z(ZENER)	5021A
13 ST-2SC2073S0	375
13-076002	703
13-085002	177
13-087005	177
13-0002	140A
13-0003	519
13-0003(PACE)	519
13-0004	109
13-0006	159
13-0006A	159
13-0009	229
13-0010	229
13-0020	229
13-0012002-00X	109
13-0012003-00X	109
13-0022017-00X	177
13-0023013-02X	229
13-0023017-02X(ECB)	229
13-0023017-02X	229
13-0040	229
13-0050	125
13-002708-05X	159
13-004	109
13-006	159
13-0014	175
13-0015	116
13-0017	5085A
13-0021	123AP
13-0022	123AP
13-0024	123AP
13-0028	195A
13-0029	139A
13-0032	130
13-0035	195A
13-0041	123AP
13-0043	159
13-0043A	159
13-0044	159
13-0044A	159
13-0048	123AP
13-0049	184
13-0058	123AP
13-0061	159
13-0061A	159
13-0062	229
13-0062-1	123AP
13-0063	229
13-0064	311
13-0065	229
13-0065(1)	161
13-0078	5130A
13-0079	195A
13-0079A	195A
13-0097	182
13-0104	74145
13-0106	5092A
13-0130	300
13-0013305-02X	102A
13-022017-00X	177
13-0022154-00X	610
13-0022322-00X	5019A
13-0022335-00X	5011A
13-0022463-00X	116
13-0022463-01X	116
13-0022609-00X	177
13-0022619-00X	519
13-0022620-00X	519
13-0023160-02X	123AP
13-0023160-03X	123AP
13-0023160-04X	123AP
13-0023160-05X	123AP
13-0023163-02X	107
13-0023163-03X	107
13-0023309-04X	123AP
13-0023309-05X	123AP
13-0023345-01X	199
13-0023362-04X	294
13-0023510-03X	123AP
13-0023510-05X	123AP
13-0023511-03X	159
13-0023511-04X	159
13-0023514-03X	293
13-0023534-02X	294
13-00235390-01X	159
13-0023708-04X	159
13-0023708-05X	159
13-0023713-09X	159
13-00237808-04X	159
13-0025802-N92	294
13-0026666-001	128
13-085012	109
13-085015	177
13-085022	177
13-085023	177
13-085024	125
13-085026	177
13-085027	125
13-085028	139A
13-085029	110MP
13-085039	116
13-085042	139A
13-086028	600
13-087027	116
13-0118	222
13-0129	299
13-0161	981
13-0164	5069A
13-0165	222
13-0178	289
13-0321-5	123AP
13-0321-6	123AP
13-0321-7	123AP
13-0321-8	123AP
13-0321-9	123AP
13-0321-10	123AP
13-0321-11	123AP
13-0321-12	123AP
13-0321-14	108
13-0321-15	108
13-0321-16	108
13-0321-17	108
13-0321-21	108
13-0321-81	123AP
13-1-6	703
13-2I606-1	127
13-2P64	152
13-2P64-1	152
13-3-6	726
13-4P63	152
13-4P63-1	152
13-4P63-I	152
13-9-4	HVD-2
13-9-6	703
13-10-4	HVD-2
13-10-6	703
13-10-6(FLEETWOOD)	703
13-11-4	HVD-2
13-11-6	703
13-11-6(SEARS)	703
13-12-03-0	109
13-12-4	HVD-2
13-17-6	123A
13-17-6(SEARS)	123AP
13-18-4	HVD-2
13-19-4	HVD-2
13-20-4	HVD-2
13-27-6	711
13-27-6(SEARS)	711
13-29-6	712
13-29-6(SEARS)	712
13-30-6	780
13-38-6	906
13-42-6	714
13-52-6	722
13-52-G	722
13-53-6	909
13-56-6	738
13-60-6	722
13-64-6	712
13-117-6	74LS175
13-1022-1	128
13-1023-1	278
13-1032-5	108
13-1032-51	229
13-1836-1	123AP
13-1847-1	196
13-2384-2	161
13-3013-16	152
13-3013-17	153
13-3013-18	375
13-4085-41	199
13-4085-121	199
13-4085-122	199
13-4112-2	552
13-5018-6	941M
13-5020-6	923D
13-5022-6	74154
13-5111-1	5130A
13-5111-3	5127A
13-5118-6	7403
13-5147-6	80C97
13-5148-6	7447
13-5153-6	988
13-5156-6	4069
13-5194-6	740A
13-6247-3	116
13-10102-1	116
13-10320-14	161
13-10321-1	108
13-10321-2	108
13-10321-3	116
13-10321-5	108
13-10321-6	108
13-10321-7	108
13-10321-8	108
13-10321-9	108
13-10321-10	108
13-10321-11	108
13-10321-12	108
13-10321-14	108
13-10321-15	108
13-10321-16	108
13-10321-17	108
13-10321-20	108
13-10321-21	108
13-10321-24	112
13-10321-26	108
13-10321-29	107
13-10321-30	108
13-10321-31	107
13-10321-32	107
13-10321-34	177
13-10321-35	107
13-10321-36	107
13-10321-37	222
13-10321-41	108
13-10321-42	107
13-10321-43	108
13-10321-46	229
13-10321-47	161
13-10321-49	612
13-10321-50	395
13-10321-51	108
13-10321-53	222
13-10321-54	177
13-10321-55	177
13-10321-58	127
13-10321-59	123AP
13-10321-62	229
13-10321-64	5025A
13-10321-65	395
13-10321-66	107
13-10321-67	107
13-10321-69	112
13-10321-70	395
13-10321-70(FET)	454
13-10321-71	107
13-10321-72	108
13-10321-75	107
13-10321-76	123AP
13-10321-77	108
13-10321-78	161
13-10321-79	161
13-10321-83	454
13-10321-90	112
13-10321-96	613
13-10321-97	613
13-10321-104	612
13-10321-110	112
13-10321-117	177
13-10321-120	612
13-10321-128	555
13-10321-133	229
13-10321-137	5010A
13-10321-147	313
13-10321-154	616
13-10321-159	455
13-10321-161	455
13-12001-0	109
13-12002-0	109
13-12003-0	109
13-13021-15	107
13-13532-1	159
13-13543-1	124
13-13543-2	124
13-14065-77	123AP
13-14084-80	5030A
13-14085-1	108
13-14085-2	108
13-14085-3	107
13-14085-4	107
13-14085-6	123AP
13-14085-7	123AP
13-14085-9	102A
13-14085-10	102A
13-14085-11	158
13-14085-12	158
13-14085-13	159
13-14085-14	172A
13-14085-15	123AP
13-14085-15A	128
13-14085-16	107
13-14085-17	107
13-14085-18	102A
13-14085-23	102A
13-14085-24	108
13-14085-25	158
13-14085-26	107
13-14085-27	108
13-14085-28	160
13-14085-29	124
13-14085-30	160
13-14085-31	126
13-14085-32	126
13-14085-33	126
13-14085-34	123AP
13-14085-35	102A
13-14085-41	123AP
13-14085-49	199
13-14085-50	123AP
13-14085-52	85
13-14085-53	85
13-14085-54	123AP
13-14085-55	85
13-14085-57	295
13-14085-58	102A
13-14085-59	102A
13-14085-60	102A
13-14085-61	158
13-14085-62	158
13-14085-71	102A
13-14085-72	123AP
13-14085-74	108
13-14085-75	108
13-14085-76	108
13-14085-77	108
13-14085-78	102A
13-14085-79	158
13-14085-83	123AP
13-14085-84	123AP
13-14085-85	199
13-14085-86	187
13-14085-87	159
13-14085-88	186
13-14085-89	123AP
13-14085-90	102A
13-14085-91	128
13-14085-92	129
13-14085-93	126
13-14085-94	199
13-14085-95	199
13-14085-96	199
13-14085-97	199
13-14085-98	85
13-14085-99	290A
13-14085-100(BCE)	85
13-14085-101(BCE)	290A
13-14085-102(SGD)	459
13-14085-103	459
13-14085-104	459
13-14085-105	192A
13-14085-107	453
13-14085-112	193A
13-14085-113	186A
13-14085-114	85
13-14085-115	199
13-14085-116	290A
13-14085-117	187A
13-14085-118	186A
13-14085-121	152
13-14085-122	199
13-14085-125	199
13-14085-126	182
13-14085-127	199
13-14085-128	290A
13-14085-129	123AP
13-14085-130	199
13-14085-132	85
13-14085-133	107
13-14085-134	229
13-14085-135	123AP
13-14085-136	184
13-14085-137	185
13-14085-139	290A
13-14085-140	184
13-14085-141	185
13-14085-142	159
13-14085-143	159
13-14085-144(ECB)	229
13-14085-145	199
13-14085-146	85
13-14085-147	85
13-14085-148	85
13-14085-149	290A
13-14085-150	289A
13-14085-151	289A
13-14085-152	290A
13-14085-153	292
13-14085-154	152
13-14085-155	199
13-14085-156	199
13-14085-157	289A
13-14085-158	85
13-14085-159	152
13-14085-160	453
13-14085-161	108
13-14085-162	123AP
13-14085-163	123AP
13-14085-164	123AP
13-14085-165	123AP
13-14085-166	123AP
13-14085-168	222
13-14085-169	152
13-14085-170	85
13-14085-171	123AP
13-14085-172	243
13-14085-173	244
13-14085-174	222
13-14085-175	108
13-14085-176	243
13-14085-177	244
13-14085-179	290A
13-14085-180	85
13-14094-1	109
13-14094-2	109
13-14094-3	109
13-14094-5	109
13-14094-6	125
13-14094-8	110MP
13-14094-9	109
13-14094-11	109
13-14094-12	116
13-14094-13	614
13-14094-14	109
13-14094-15	109
13-14094-16	116
13-14094-17	116
13-14094-24	116
13-14094-31	614
13-14094-33	177
13-14094-38	116
13-14094-39	116
13-14094-42	116
13-14094-54	116
13-14094-57	177
13-14094-59	5011A
13-14094-60	5019A
13-14094-79	5021A
13-14094-80	5030A
13-14097-7	177
13-14261-1	116
13-14261-3	116
13-14261-4	125
13-14261-5	116
13-14278-1	614
13-14278-2	614
13-14279-1	103A
13-14604-1	121MP
13-14604-1A	121MP
13-14604-1B	121MP
13-14604-1C	121MP
13-14604-1D	121MP
13-14604-1E	121MP
13-14605-1	128
13-14606-1	123AP
13-14627-1	116
13-14627-4	116
13-14735	121

PART NUMBER	NTE REPLACEMENT
13-14735-1	121
13-14735A	121
13-14777-1	121MP
13-14777-1A	121MP
13-14777-1B	121MP
13-14777-1C	121MP
13-14777-1D	121MP
13-14778-1	121MP
13-14778-1A	121MP
13-14778-1B	121MP
13-14778-1C	121MP
13-14778-1D	121MP
13-14858-1	116
13-14879-1	145A
13-14879-2	142A
13-14879-3	145A
13-14879-4	138A
13-14879-5	5075A
13-14879-6	5079A
13-14879-7	5079A
13-14886-1	126
13-14887-1	126
13-14888-3	102
13-14889-1	126
13-14890-1	109
13-15465-1	178MP
13-15804-1	123AP
13-15805-1	102
13-15806-1	121
13-15808-1	123AP
13-15808-2	161
13-15809-1	154
13-15810-1	108
13-15833-1	128
13-15835-1	161
13-15836-1	102
13-15840-1	123AP
13-15840-2	123AP
13-15841-1	108
13-15842-1	297
13-15865-1	123AP
13-16104-8	116
13-16104-9	116
13-16106-1	118
13-16106-3	503
13-16106-4	504
13-16106-5	504
13-16106-6	504
13-16106-7	504
13-16219-7	113A
13-16235-8	109
13-16247-3	116
13-16570-1	159
13-16570-1A	159
13-16570-2	159
13-16570-2A	159
13-16592-1	127
13-16607-1	127
13-16608-1	127
13-16744-1	108
13-16769-1	123AP
13-17174-1	116
13-17174-2	116
13-17174-3	116
13-17174-4	156
13-17174-5	506
13-17204	135A
13-17204-1	177
13-17546-2	177
13-17557-1	116
13-17569	120
13-17569-1	177
13-17569-2	177
13-17595-2	177
13-17596-1	120
13-17596-2	177
13-17596-2(BIAS)	112
13-17596-2(DET/AGC)	177
13-17596-2(RECT)	116
13-17596-3	177
13-17596-4	177
13-17596-5	177
13-17596-6	135A
13-17596-7	177
13-17596-8	177
13-17596-9	177
13-17596-10	519
13-17607-1	127
13-17607B	127
13-17608-1	127
13-17608-2	127
13-17608B	127
13-17608C	127
13-17609-1	127
13-17825-1	116
13-17918-1	130
13-18022-7	109
13-18032-1	102A
13-18033-1	102A
13-18034	121
13-18034-1	121
13-18034A	121
13-18087-1	123AP
13-18087-2	123AP
13-18158-1	123AP
13-18198-1	121MP
13-18282	124
13-18282-1	124
13-18304-1	102A
13-18359	124
13-18359-1	124
13-18359-3	124
13-18359A	124
13-18363	123
13-18363-1	123AP
13-18363-1A	123
13-18364-1	123AP
13-18365-1	199
13-18458-1	116
13-18481-1	5802
13-18481-2	5800
13-18481-3	5802
13-18642-1	179
13-18642-2	179
13-18642-2D	179
13-18642-2E	179
13-18642-2F	179
13-18642-3	179
13-18642-3A	179
13-18642-3B	179
13-18642-20	179
13-18642-21	179
13-18654-1	103A
13-18671-1	102A
13-18671-1A	102A
13-18671-1B	102A
13-18671-1C	102A
13-18924-1	5455
13-18924-1(RECT)	5400
13-18924-1(SCR)	5452
13-18924-2	5401
13-18924-3	5400
13-18924-4	5400
13-18924-5	5400
13-18924-7	5404
13-18924-8	5400
13-18927-1	123AP
13-18927-1A	128
13-18944-1	100
13-18944-2	100
13-18946-1	160
13-18946-2	160
13-18947-1	160
13-18948-1	160
13-18948-2	160
13-18949-1	108
13-18950-1	108
13-18950-2	160
13-18951-1	126
13-18951-2	126
13-18956-2	100
13-19776-1	159
13-21606-1	127
13-22017-0	177
13-22154-0	614
13-22154-500	610
13-22156-0	614
13-22319-0	5074A
13-22452-0	116
13-22463-0	116
13-22463-1	116
13-22581	123AP
13-22581-1	123AP
13-22582-1	159
13-22582-1A	159
13-22606-0	177
13-22609-0	177
13-22690-1	132
13-22692-1	132
13-22692-2	132
13-22739-1	121MP
13-22741	121
13-22741-1	121MP
13-22741-2	121MP
13-23001-2	229
13-23002-2	229
13-23013-2	161
13-23160-2	233
13-23160-3	319P
13-23160-4	123AP
13-23160-5	229
13-23163-2	229
13-23309-5	123AP
13-23323-4	123AP
13-23323-6	123AP
13-23324-6	123AP
13-23325-5	159
13-23326-6	299
13-23327-4	199
13-23338-3	199
13-23338-4	199
13-23339-2	199
13-23339-3	199
13-23345-2	199
13-23505-2	287
13-23506-2	288
13-23507-0	184
13-23508-0	185
13-23510-4	199
13-23519-2	152
13-23543-1	124
13-23543-2	124
13-23594-1	130
13-23785-1	102A
13-23822	108
13-23822-1	229
13-23824	123AP
13-23824-1	319P
13-23824-2	161
13-23824-3	229
13-23825-1	154
13-23826-1	159
13-23826-1A	159
13-23826-2	159
13-23826-2A	159
13-23826-3	159
13-23826-3A	159
13-23826-Q	290
13-23840-1	128
13-23892-5	192
13-23916-1	123AP
13-23917-1	177
13-25226-1	123AP
13-25343-1	124
13-26009-1	161
13-26377-1	131
13-26377-2	155
13-26386-1	159
13-26386-1A	159
13-26386-2	159
13-26386-2A	159
13-26386-3	159
13-26386-4	106
13-26576-1	161
13-26576-2	161
13-26577-1	161
13-26577-2	161
13-26577-3	161
13-26614-1	507
13-26666	128
13-26666-1	128
13-27050-1	103A
13-27404-1	123AP
13-27404-2	123AP
13-27432-1	128
13-27432-2	123AP
13-27433-1	123AP
13-27443-1	128
13-27596-5	177
13-27974-1	157
13-27974-2	157
13-27974-3	157
13-27974-4	157
13-28222-1	183
13-28222-2	182
13-28222-3	182
13-28222-4	182
13-28336-1	185
13-28336-2	184
13-28336-20(NPN)	184
13-28336-20(PNP)	185
13-28386-1	129
13-28391-1	159
13-28391-1A	159
13-28391-2	159
13-28391-2A	159
13-28392-1	128
13-28392-2	128
13-28392-3	128
13-28392-5	192
13-28393-1	129
13-28393-1A	129
13-28393-2	129
13-28393-2A	129
13-28393-3	193
13-28394-1	128
13-28394-2	128
13-28394-3	128
13-28394-4	129
13-28394-4A	129
13-28394-5	129
13-28394-5A	129
13-28394-6	129
13-28432-1	194
13-28432-2	154
13-28469-2	152
13-28471-1	128
13-28471-1(METAL)	128
13-28532-1	182
13-28583-1	222
13-28584	108
13-28584-1	108
13-28654-1	132
13-28654-2	132
13-28654-3	132
13-28654-4	133
13-28654-5	133
13-29033-1	123AP
13-29033-2	123AP
13-29033-3	123AP
13-29033-4	199
13-29033-5	199
13-29033-6	108
13-29165-1	156
13-29165-2	156
13-29392-2	123AP
13-29432-1	123AP
13-29437-1	191
13-29656-1	118
13-29663-1	506
13-29687-2	177
13-29775-1	172A
13-29775-2	172A
13-29775-3	172A
13-29776-1	159
13-29776-1A	159
13-29776-2	159
13-29776-3	159
13-29777-1	614
13-29778-3	500A
13-29867-1	177
13-29867-2	177
13-29867-2(SUPP)	116
13-29867-2(SW)	177
13-29947-1	161
13-29974-1	161
13-29974-4	157
13-30281	109
13-31013-1	123
13-31013-1(SYLV)	159
13-31013-1/2	159
13-31013-2	159
13-31013-3	113A
13-31013-4	108
13-31013-5	161
13-31013-6	116
13-31013-7	233
13-31013-7(METAL)	161
13-31013-8	107
13-31013-8(METAL)	161
13-31013-9	290A
13-31013-10	85
13-31013-11	287
13-31013-11(ECB)	287
13-31013-12	289A
13-31013-13	289A
13-31013-14	290A
13-31013-16	186A
13-31013-17	187A
13-31013-18	291
13-31013-19	85
13-31013-20	229
13-31013-21	107
13-31013-22	107
13-31013-23	123AP
13-31013-24	294
13-31013-25	293
13-31013-26	192A
13-31013-27	373
13-31013-28	289A
13-31013-29	108
13-31013-30	290A
13-31013-31	290A
13-31013-32	294
13-31013-33	293
13-31013-33(ECB)	293
13-31013-42	108
13-31013-43	389
13-31013-44	198
13-31013-45	123AP
13-31013-46	159
13-31013-47	198
13-31013-48	287
13-31013-49	128
13-31013-50	129
13-31013-51	123AP
13-31013-52	159
13-31013-53	107
13-31013-54	229
13-31013-55	229
13-31013-56	229
13-31013-58	198
13-31013-59	375
13-31013-60	198
13-31013-61	375
13-31013-62	389
13-31013-63	123AP
13-31013-64	187A
13-31013-65	193
13-31013-66	379
13-31013-67	186A
13-31014-1	116
13-31014-2	109
13-31014-3	116
13-31014-4	112
13-31014-5	177
13-31014-6	552
13-31014-7	552
13-31014-8	116
13-31014-9	5015A
13-31014-10	177
13-31014-11	109
13-31014-12	109
13-31014-13	177
13-31014-14	5010A
13-31014-15	611
13-31014-16	552
13-31014-17	525
13-31014-19	552
13-31014-21	109
13-31014-22	519
13-31014-23	503
13-31014-24	116
13-31014-26	5074A
13-31014-27	552
13-31014-29	519
13-31014-30	552
13-31014-31	552
13-31014-32	525
13-31014-33	558
13-31014-34	143A
13-31014-37	116
13-31014-40	519
13-31014-41	504
13-31014-43	552
13-31015-12	712
13-32362-1	199
13-32364-1	159
13-32366-1	108
13-32366-2	108
13-32630-1	128
13-32630-2	192
13-32630-3	128
13-32630-4	192
13-32631	193
13-32631-1	129
13-32631-2	193
13-32631-3	129
13-32631-4	193
13-32634-1	186
13-32635-1	187
13-32636-1	152
13-32638-1	184
13-32640-1	152
13-32642-1	184
13-33172-2	506
13-33173-1	312
13-33174-1	171
13-33174-2	171
13-33175-1	172A
13-33175-2	172A
13-33176-1	171
13-33177-1	614
13-33178-1	193
13-33179-1	5099A
13-33179-2	145A
13-33179-3	5098A
13-33179-4	140A
13-33179-5	5079A
13-33179-6	142A
13-33179-7	5097A
13-33179-8	5082A
13-33179-12	5094A
13-33179-14	142A
13-33179-15	5010A
13-33180-1	188
13-33181-1	165
13-33181-2	165
13-33181-3	165
13-33182-1	162
13-33182-2	162
13-33182-8	5099A
13-33183-0	5452
13-33184-1	6402
13-33185-1	210
13-33186-1	147A
13-33187-1	150A
13-33187-2	5050A
13-33187-3	5029A
13-33187-4	5081A
13-33187-5	5094A
13-33187-6	5019A
13-33187-7	5019A
13-33187-8	5098A
13-33187-9	5030A
13-33187-10	5055A
13-33187-11	5021A
13-33187-12	136A
13-33187-13	5097A
13-33187-14	134A
13-33187-15	5082A
13-33187-18	5024A
13-33187-19	5008A
13-33187-20	5098A
13-33187-26	138A
13-33187-31	5029A
13-33187-32	5005A
13-33187-34	5097A
13-33187-36	5027A
13-33187-38	5016A
13-33187-39	5013T1
13-33188-1	182
13-33188-2	130
13-33189-1	507
13-33190-1	168
13-33350-1	123AP
13-33376-1	116
13-33595-1	123AP
13-33595-2	123AP
13-33595-3	123AP
13-33742-1	186
13-33742-1METAL	128
13-33742-1PLASTIC	188
13-33925-1	184
13-33959-1	5400
13-34001-1	172A
13-34002-1	196
13-34002-2	196
13-34002-3	241
13-34002-4	196
13-34002-5	241
13-34003-1	188
13-34003-1(METAL)	129
13-34004-1	189
13-34004-1(METAL)	129
13-34004-1A	185
13-34045-1	108
13-34045-2	108
13-34046-1	186
13-34046-2	186
13-34046-3	186
13-34046-4	186
13-34046-5	186
13-34047-1	187
13-34047-2	187
13-34047-3	187
13-34047-4	187
13-34056-1	177
13-34057-1	116
13-34089-2	157
13-34089-4	157
13-34367-1	159
13-34367-3	159
13-34367-30	234
13-34368-1	5802
13-34368-2	5804
13-34369-1	106
13-34371-1	128
13-34372-1	188
13-34372-2	186
13-34373-1	189
13-34373-2	187
13-34374-1	181
13-34375-1	132
13-34375-2	312
13-34378-1	132
13-34378-2	312
13-34378-3	312
13-34381	123AP
13-34381-1	199
13-34381-2	123AP
13-34616-1	196
13-34617-1	197
13-34684-1	181
13-34838-1	196
13-34839-1	197
13-34901-1	125
13-34940-1	106
13-35059-1	712
13-35226-1	123AP
13-35257-1	157
13-35257-2	157
13-35257-3	157
13-35257-4	157
13-35324	265
13-35324-1	265
13-35472-1	198
13-35550	108
13-35550-1	199
13-35621-1	109
13-35792-1	102A
13-35807-1	194
13-35807-2	123AP
13-35894-4	500A
13-36314-1	241
13-36386-1	159
13-36440-1	284
13-36441-1	285
13-36443-1	197
13-36444-3	184
13-36445-3	185
13-36508-1	188
13-36509-1	189
13-37526-1	188
13-37527-1	189
13-37708-1	165
13-37818-1	507
13-37868-1	552
13-37869-1	287
13-37870-1	165
13-37870-2	165
13-37870-I	165
13-37905-1	147A
13-37933-2	504
13-39004-1	196
13-39004-2	152
13-39046-3	186
13-39047-3	187
13-39072-1	506
13-39072-2	552
13-39073-1	116
13-39074-1	186
13-39098-1	186
13-39099-1	291
13-39099-2	196
13-39100-1	153
13-39114-1	123AP
13-39114-2	123AP
13-39114-3	192
13-39115-1	193
13-39115-2	193
13-39115-3	159
13-39146-1	191
13-39174-1	191
13-39607-4	5604
13-39678-1	5604
13-39678-3	5604
13-39678-4	5604
13-39819-1	153
13-39819-2	153
13-39851-1	194
13-39860-1	116
13-39863-1	147A
13-39867-2	506
13-39884-1	152
13-39884-2	152
13-39884-3	152
13-39970-1	159
13-40083-1	106
13-40083-2	106
13-40312-1	199
13-40340-1	241
13-40341-1	292
13-40342-1	284
13-40343-1	285
13-40344-1	184
13-40345-1	185
13-40346-1	281
13-40347-1	180
13-41122-1	125
13-41122-2	125
13-41122-4	116
13-41122-5	125
13-41122-21	552
13-41123-2	125
13-41123-4	116
13-41547-3	525
13-41628-2	291
13-41628-3	152
13-41628-5	186A
13-41629-4	292
13-41738-1	280
13-43005-1	291
13-43112-1	312
13-43112-2	132
13-43250-1	177
13-43382-1	503
13-43463-1	238
13-43463-2	165
13-43633-1	165
13-43634-1	159
13-43635-1	152
13-43766-1	116
13-43773-1	123AP
13-43777-1	552
13-43777-2	552
13-43790-1	186
13-43791-1	187
13-43956-1	515
13-43956-2	515
13-43956-11	125
13-44290	133
13-44291	133
13-44363-2	165
13-45016-1	389
13-45147-1	525
13-45147-3	525
13-45321-1	171
13-45539-1	238
13-50385-1	185
13-50482	185
13-50482-1	185
13-50484-1	100
13-50486-1	100
13-50528	123AP
13-50528-1	123AP
13-50631-1	100
13-50944-1	100
13-55009-1	127
13-55009-2	127
13-55010-1	503
13-55018-4	128
13-55020-1	108
13-55029-1	116
13-55030-1	506
13-55031-1	506
13-55031-2	506
13-55031-3	506
13-55046-1	109
13-55061-1	123AP
13-55061-1(AGC)	128
13-55061-1(HOR-MUL)	123AP
13-55061-1(SOUND)	123AP
13-55061-2	123AP
13-55061-2(SYL)	123AP
13-55061-2(WARDS)	128
13-55062-1	154
13-55063-1	108
13-55064-1	128
13-55064-1(SYL)	175
13-55064-1(WARDS)	192
13-55065-1	108
13-55066-1	123AP
13-55066-2	123AP
13-55066-2(SYL)	128
13-55066-2(WARDS)	128
13-55067-1	123AP
13-55068-1	123AP
13-55069-1	159
13-55069-1A	159
13-55078-1	506
13-55166-1	109
13-55166-1/2439	109
13-55166-1/2439-2	109
13-55166-1/3464	109
13-55332-1	142A
13-55333-1	177
13-59954-12	85
13-67539-1	166
13-67539-1(MOTOROLA)	116
13-67539-1/3464	166
13-67544-1	136A
13-67544-1/3464	136A
13-67583-5	108
13-67583-6	123AP
13-67583-6/3464	107
13-67584-4/3464	161
13-67585-4	123AP
13-67585-4/2439	194
13-67585-4/2439-2	123AP
13-67585-4/3464	107
13-67585-5	123AP
13-67585-5/2439	194
13-67585-5/3464	123AP
13-67585-5/2439-2	108
13-67585-6/2439	123AP
13-67585-6/2439-2	108
13-67585-7	123AP
13-67585-7/2439-2	123AP
13-67585-7/2439	194
13-67586-3	123AP
13-67586-3/3464	123AP
13-67590-1	177
13-67590-1/2439	109
13-67590-1/3464	177
13-67590-1/2439-2	109
13-67599-3	102A
13-67599-3/2439-2	102A
13-67599-3/3464	158
13-67599-9	126
13-67600-3	614
13-67600-4/2439-2	614
13-67600-5	614
13-68617-1	123AP
13-85943-1	113A
13-85943-2	113A
13-85943-3	113A
13-85962-1	109
13-86416-1	103
13-86420-1	101
13-87433-1	101
13-87539-4	116
13-87539-4(REALTONE)	166
13-88302	117
13-93072-2	552
13-94096-2	102A
13-102001	116
13-105698-1	128

PART NUMBER	NTE REPLACEMENT
13-238221	319P
13-283361-1	197
13-331182-1	162
13-350591	712
13-411222	552
13-547604	519
13-1032176	161
13-3011279-01X	614
13-3015121-1	238
13-3015122-1	123AP
13-3015123-1	159
13-3015124-1	397
13-3015125-1	386
13-3015127-1	5314
13-3015128-1	287
13-3015129-1	797
13-3015130-1	740A
13-3015132-1	194
13-3015733-1	159
13-3015735-1	5134A
13-3015735-2	5130A
13-3015735-3	5116A
13-3015735-4	5127A
13-3015735-5	5116A
13-3017148-1	5351
13-3017149-1	123AP
13-3017150-1	159
13-3017629-1	190
13-3017630-1	5152A
13-3017783-1	125
13-30171481-1	230
13-30172150-1	159
13-4800869145	129
13A	5023A
13B	5022A
13B1	5022A
13B1(ZENER)	5022A
13B2	5022A
13B(ZENER)	5022A
13D4	116
13DD02F	140A
13J2	116
13J2F	116
13N1	5022A
13N2	5022A
13P1	116
13P2	177
13P2(RECT)	125
13RC2	5541
13RC5	5541
13RC10	5545
13RC15	5543
13RC20	5543
13RC25	5544
13RC30	5544
13RC40	5545
13RECT-SI-1014	552
13SD-1N60	109
13SD-1N60S	109
13ST-2SC2073S0	375
13ST-2SC2073S0	375
13Y	5022A
13Z6AF	5067A
13Z6F	5067A
13Z-1005	109
14 806 12	123AP
14-000514-36	519
14-000514-38	5802
14-000514-42	519
14-000515-67	5018A
14-000515-73	5092A
14-000515-75	142A
14-000515-77	5051A
14-000515-84	5042A
14-000516-04	5412
14-000521-03	3020
14-000873-32	159
14-000935-12	188
14-000936-32	287
14-000937-23	291
14-000940-01	219
14-000941-01	130
14-000943-12	108
14-000944-12	190
14-0072-1	116
14-0072-1(PHILCO)	116
14-0072-2	116
14-0072-2(PHILCO)	116
14-0072-3	116
14-0072-3(PHILCO)	116
14-0086-1	129
14-0104-1	152
14-0104-2	153
14-0104-3	129
14-0104-4	128
14-0104-5	172A
14-0104-6	5066A
14-0104-7	123AP
14-0110-1	161
14-0110-2	161
14-00514-37	109
14-1	123AP
14-2	123AP
14-3	123AP
14-10	109
14-501-01	113A
14-501-02	113A
14-502-01	109
14-504-01	109
14-507-01	177
14-508-01	614
14-509-01	142A
14-509-02	135A
14-510-01	109
14-511-01	109
14-512-01	109
14-513-01	109
14-514-01	109
14-514-01/51	109
14-514-02	177
14-514-03	506
14-514-03/53	506
14-514-04	110MP
14-514-04/64	110MP
14-514-05	109
14-514-05/55	109
14-514-06	109
14-514-07	506
14-514-07/57	506
14-514-08	109
14-514-08/58	109
14-514-09	109
14-514-10	109
14-514-10/60	109
14-514-11	110MP
14-514-11/61	110MP
14-514-12	519
14-514-13	110MP
14-514-13/63	110MP
14-514-14	506
14-514-15	177
14-514-16	110MP
14-514-16/66	110MP
14-514-17	177
14-514-17/67	506
14-514-18	506
14-514-18/68	506
14-514-19	177
14-514-20	178MP
14-514-20/70	506
14-514-21	109
14-514-22	109
14-514-22/72	109
14-514-23	506
14-514-23/73	506
14-514-55	109
14-514-61	109
14-514-62	519
14-514-64	519
14-514-65	178MP
14-514-66	506
14-514-70	177
14-514-72	109
14-514-74	506
14-514-75	116
14-515-01	142A
14-515-02	135A
14-515-03	142A
14-515-04	138A
14-515-05	5077A
14-515-06	5186A
14-515-06/66	109
14-515-07	145A
14-515-08	5188A
14-515-09	145A
14-515-11	145A
14-515-12	139A
14-515-13	138A
14-515-14	5077A
14-515-15	135A
14-515-16	139A
14-515-17	138A
14-515-18	141A
14-515-19	139A
14-515-23	5024A
14-515-24	139A
14-515-25	142A
14-515-26	138A
14-515-27	5071A
14-515-28	5082A
14-515-29	151A
14-515-30	5071A
14-515-73	145A
14-557-10	102A
14-564-08	158
14-566-08	126
14-568-04	126
14-569-09	160
14-572-10	123AP
14-573-10	121
14-574-10	121
14-575-10	123AP
14-576-10	158
14-577-10	102A
14-578-10	121
14-579-10	121
14-580-01	160
14-581-01	160
14-582-01	126
14-583-01	123AP
14-584-01	102A
14-585-01	160
14-586-01	104
14-587-01	160
14-588-01	160
14-589-01	121
14-590-01	121
14-591-01	160
14-593-01	6400
14-593-03	6400
14-600-01	160
14-600-02	160
14-600-04	160
14-600-07	109
14-600-10	160
14-600-11	160
14-600-13	160
14-600-16	160
14-600-19	160
14-600-20	160
14-600-22	160
14-601-01	121
14-601-02	179
14-601-03	121
14-601-04	121
14-601-05	121
14-601-06	121
14-601-07	121
14-601-08	104
14-601-09	121
14-601-10	130
14-601-11	121
14-601-12	130
14-601-13	130
14-601-14	162
14-601-15	130
14-601-15A	130
14-601-16	130
14-601-16A	130
14-601-17	184
14-601-26	181
14-601-27	165
14-601-28	123AP
14-601-29	123AP
14-601-46	284
14-602-01	123AP
14-602-02	123AP
14-602-03	123AP
14-602-04	102A
14-602-05	102A
14-602-05A	102A
14-602-06	158
14-602-07	158
14-602-08	158
14-602-09	158
14-602-3(NPN)	103A
14-602-3(PNP)	102A
14-602-10	102A
14-602-11	159
14-602-11A	159
14-602-12	123AP
14-602-13	123AP
14-602-14	123AP
14-602-15	102A
14-602-16	123AP
14-602-17	123AP
14-602-18	128
14-602-19	154
14-602-20	159
14-602-20A	159
14-602-21	103A
14-602-22	123AP
14-602-23	123AP
14-602-24	128
14-602-25	199
14-602-26	123AP
14-602-27(NPN)	103A
14-602-27(PNP)	102A
14-602-28	129
14-602-28A	129
14-602-29	128
14-602-30	128
14-602-31	161
14-602-32	159
14-602-32A	159
14-602-33(NPN)	103A
14-602-33(PNP)	102A
14-602-34	161
14-602-35	123AP
14-602-36	154
14-602-37	154
14-602-38(NPN)	103A
14-602-38(PNP)	102A
14-602-39(NPN)	103A
14-602-39(PNP)	102A
14-602-40(NPN)	103A
14-602-40(PNP)	102A
14-602-41	108
14-602-42	159
14-602-42A	159
14-602-43	128
14-602-44	159
14-602-44A	159
14-602-45	161
14-602-46	199
14-602-46A	199
14-602-47	159
14-602-47A	159
14-602-48	123AP
14-602-49	128
14-602-50	123AP
14-602-51	158
14-602-52	103A
14-602-54	193
14-602-54A	159
14-602-55	192
14-602-55A	123AP
14-602-56	159
14-602-56A	159
14-602-57(NPN)	128
14-602-57(PNP)	129
14-602-58	159
14-602-58A	159
14-602-59	128
14-602-60	129
14-602-61	123AP
14-602-62	123AP
14-602-63	199
14-602-64	234
14-602-65	128
14-602-66	129
14-602-67	175
14-602-68	159
14-602-69	123AP
14-602-70	192
14-602-71	193
14-602-72	128
14-602-73	129
14-602-74	192
14-602-75	193
14-602-76	198
14-602-77	107
14-602-77B	107
14-602-78	123AP
14-602-79	129
14-602-79A	129
14-602-80	123AP
14-602-81	123AP
14-602-85	129
14-602-87	123AP
14-602-88	159
14-602-89	123AP
14-602-90	159
14-602-580	159
14-602-600	159
14-603-01	128
14-603-02	161
14-603-02A	128
14-603-03	123AP
14-603-04	123AP
14-603-05	107
14-603-05-2	107
14-603-06	107
14-603-07	128
14-603-08	161
14-603-09	161
14-603-10	123AP
14-603-11	123AP
14-603-12	108
14-603-13	161
14-604-01(NPN)	152
14-604-01(PNP)	153
14-604-02(NPN)	152
14-604-02(PNP)	153
14-604-03(NPN)	155
14-604-03(PNP)	131
14-604-07	121
14-604-08	121
14-607-29	129
14-607-29A	129
14-608-01	184
14-608-02	184
14-608-02A	196
14-608-03	184
14-608-04	184
14-609-00	152
14-609-01	191
14-609-01A	191
14-609-02	171
14-609-02A	191
14-609-03	152
14-609-03A	196
14-609-04	152
14-609-05	191
14-609-06	152
14-609-08	152
14-609-09	196
14-609-49A	108
14-651-12	123AP
14-652-12	161
14-653-21	161
14-654-21	128
14-655-13	123AP
14-656-21	123AP
14-659-12	123AP
14-660-12	123AP
14-661-21	161
14-700-01	132
14-700-02	133
14-700-03	132
14-700-04	132
14-700-05	132
14-700-06	132
14-710-21	132
14-713-31	132
14-713-32	132
14-714-13	132
14-800-32	123AP
14-801-12	123AP
14-801-23	199
14-802-12	123AP
14-803 12	159
14-803-12	159
14-803-32	234
14-804-12	159
14-805-12	123AP
14-806-12	123AP
14-806-23	123AP
14-807-12	106
14-807-23	123AP
14-808-12	159
14-809-23	123AP
14-809-32	123AP
14-811-12	194
14-850-12	161
14-851-12	161
14-851-32	123AP
14-853-23	123AP
14-854-12	123AP
14-855-32	159
14-856-23	159
14-857-12	159
14-857-32	129
14-857-79	159
14-858-12	123AP
14-861-12	106
14-862-23	123AP
14-862-32	123AP
14-863-23	159
14-864-12	123AP
14-864-23	159
14-865-12	123AP
14-866-32	123AP
14-867-32	159
14-900-12	191
14-901-12	171
14-902-23	152
14-903-23	152
14-904-12	191
14-905-23	152
14-906-13	184
14-907-13	184
14-908-23	152
14-909-23	152
14-910-13	184
14-911-13	184
14-2000-01	172A
14-2000-02	172A
14-2000-03	172A
14-2000-04	172A
14-2000-05	172A
14-2000-23	172A
14-2002-01	133
14-2008-01	708
14-2012-01	801
14-2014-01	815
14-2052-23	172A
14-2053-23	172A
14-2054-01	731
14-5016T/1C7313AP	1465
14-32430	108
14-40325A	130
14-40363A	130
14-40369A	130
14-40421A	130
14-40464A	130
14-40465A	130
14-40466A	130
14-40471	130
14-40934-1	130
14-41627-2	821
14-60237	171
14-SAM(3)	2415
14/514-12/62	506
14/514-14/64	506
14/514-19/69	506
14A	121
14A0	121
14A1	121
14A1-A82	121
14A2	121
14A3	121
14A4	121
14A5	121
14A6	121
14A7	121
14A8	121
14A8-1	160
14A8-1-12	160
14A9	121
14A10	121
14A10R	121
14A11	121
14A12	121
14A13	121
14A13P	121
14A14	121
14A14-7	121
14A14-7B	121
14A15	121
14A15L	121
14A16	121
14A16-5	121
14A17	121
14A17-1	121
14A18	121
14A19	121
14A19G	121
14A0	121
14AZ7.5X	5014A
14B348-1	523
14B348-2	523
14B348-3	523
14B348-4	523
14B348-5	523
14DK470	2V030
14I4-180	175
14J2	116
14J2F	116
14K470	2V030
14LN033	1060
14LN034	1181
14LQ007	1003
14MW69	102A
14P2	116
14Z6AF	5068A
14Z6F	5068A
15-03100	123AP
15-08800U	108
15-085002	109
15-088002	159
15-088002A	159
15-088003	107
15-085003	109
15-085004	113A
15-088004	108
15-085005	177
15-085006	116
15-085007	116
15-085008	177
15-085008(MIDLAND)	506
15-085009	109
15-0009-05	196
15-09090-01	159
15-008-1	106
15-03014-00	123AP
15-03051-00	107
15-03068	130
15-03099	159
15-082019	123AP
15-05302	123AP
15-03409-0	159
15-03409-02	159
15-03409-1	159
15-085015	116
15-085016	116
15-085018	112
15-085027	109
15-085032	109
15-085033	125
15-085037	109
15-085038	113A
15-085039	113A
15-085040	116
15-085041	125
15-085042	174
15-085043	116
15-085047	113A
15-085061	109
15-05650	123AP
15-09650	128
15-0077551-03X	4069
15-09980	123AP
15-033-0	116
15-01742	159
15-01913-00	159
15-01999	123AP
15-02155	128
15-02757-00	199
15-02762-00	159
15-02762-1	159
15-02762-2	159
15-02979	159
15-05369	123AP
15-05415	218
15-09338	123AP
15-09587	199
15-1	123AP
15-2	123AP
15-2R51-1	722
15-3	159
15-4	159
15-5	159
15-19CC19	5100A
15-20A70	110MP
15-20A90	110MP
15-20A-90M	109
15-30	159
15-40	159
15-50	159
15-166N	107
15-875-075-001	159
15-875-075-003	123AP
15-5016T/IC7313AP	1465
15-7142C-1	722
15-10062-0	128
15-14471-1	1085
15-14471-6	743
15-14471-7	824
15-14471-8	824
15-14471-17	2004
15-14471-18	788
15-26587	703
15-26587-1	703
15-31015-1	1022
15-31015-7	712
15-31015-8	615P
15-31015-9	1115A
15-31015-10	712
15-31015-12	712
15-33201	712
15-33201-1	712
15-33201-2	712
15-34005-1	727
15-34048-1	708
15-34048-2	708
15-34049	722
15-34049-1	722
15-34049-3	722
15-34202-1	727
15-34408-1	708
15-34408-2	708
15-34452	709
15-34452-1	709
15-34503	722
15-34503-1	722
15-34503-2	722
15-34906-1	799
15-35059	712
15-35059-1	712
15-35059-2	712
15-36446-1	743
15-36994-1	788
15-36995-1	744
15-37701-2	793
15-37702-1	714
15-37833-1	909D
15-37833-2	909D
15-39060-1	747
15-39075-1	738
15-39098-1	186
15-39209-1	791
15-40183-1	801
15-41627-2	821
15-41764-1	822
15-41764-2	822
15-43251-1	747
15-43251-2	747
15-43636-1	1231
15-43703	738
15-43703-1	738
15-45184-1	4024B
15-45185-1	4016B
15-45186-1	987
15-45300-1	712
15-71420-1	722
15-100001	116
15-100002	116
15-100003	178MP
15-100004	116
15-103022	116
15-108001	178MP
15-108002	113A
15-108003	116
15-108004	116
15-108005	116
15-108006	116
15-108007	120
15-108008	177
15-108008(MIDLAND)	506
15-108009	113A
15-108010	116
15-108011	116
15-108012	118
15-108013	506
15-108014	120
15-108015	116
15-108016	116
15-108017	118
15-108020	116
15-108021	116
15-108022	116
15-108023	113A
15-108024	116
15-108025	177
15-108026	506
15-108027	506
15-108029	506
15-108031	116
15-108032	116
15-108033	138A
15-108034	116
15-108035	506
15-108036	116
15-108037	116
15-108038	120
15-108040	506
15-108041	506
15-108042	177
15-108043	506
15-108044	506
15-108046	125
15-108047	506
15-108048	506
15-108049	116
15-108050	116
15-108107	118
15-123060	539
15-123065	152
15-123100	283
15-123101	177
15-123102	506
15-123103	506
15-123104	503
15-123105	116
15-123106	138A
15-123202	291
15-123230	165
15-123231	503
15-123242	125
15-123243	116
15-123300	552
15-123303	187A
15-123425	552
15-301092-01X	788
15-401764-2	822
15-505753-2	911
15-2210921	160
15-2221011	102A
15-3010926-01X	788
15-3010929-01X	743
15-3011135-01X	4011B
15-3011286-01X	987
15-3011297-01X	928M
15-3011405-01X	966
15-3013896-01X	4013B
15-3015129-1	797
15-3015130-1	740A(8)
15-3015131-1	1376
15-3015131-2	1374
15-3015131-3	1376
15-3015402-1	40161B
15-3015731-2	937M
15-3015734-1	1413
15-3017045-1	1231A
15-3017119-1	852
15-3017775-1	965
15-22210111	102A
15-22210131	160
15-22210300	160
15-22210921	160
15-22211021	160
15-22211200	102A
15-22211328	102A
15-22211921	160
15-22214400	160
15-22214411	160
15-22214435	160

PART NUMBER	NTE REPLACEMENT
15-22214821	160
15-22214831	160
15-22216500	102A
15-22216600	160
15-22217400	160
15-22223720	123AP
15-30151129-1	797
15B1	5023A
15B1(ZENER)	5023A
15B1ZENER	5023A
15B2	116
15B2(ZENER)	5023A
15B2ZENER	5023A
15B3	145A
15B3(ZENER)	5024A
15B4B41	5312
15B6	5806
15B8	5808
15B10	5809
15BD11	116
15C05	5800
15C1	5801
15C2	5802
15C2D	5802
15C4	5804
15C6	5806
15C8	5808
15C10	5809
15DD02F	140A
15E	318
15E6	5206A
15E7	5808
15E8	5808
15E10	5809
15F6	5806
15F8	5808
15F10	5809
15H3P	5854
15H3PN	5855
15J2	116
15J2F	116
15M3PN	5855
15M45	5024A
15MQ20	6084
15MQ30	6084
15MQ40	6084
15N1	116
15N2	5874
15N2(POWER)	5874
15N3	5874
15N3(POWER)	5874
15P2	177
15P2(POWER)	5874
15P3	5874
15P3(POWER)	5874
15PD14053B	4053B
15Q3	5944
15S05	5800
15S1	5801
15S2	5802
15S4	5804
15S6	5806
15SB03S	6084
15SB04S	6084
15SI-CA3064E	783
15ST-2SB561C(AU)E	298
15Y	5024A
15Z3	159
15Z6AF	5069A
15Z6F	5069A
16-2	116
16-17	312
16-19(SYMPHONIC)	129
16-20(SYMPHONIC)	128
16-500	118
16-736	108
16-3006	5015A
16-21426	161
16-45202	3007
16-45202-1	3007
16-3015419-1	3021
16-3015419-2	3023
16-3017187-1	3022
16-147191229	123AP
16-171191368	123AP
16-207190405	102A
16-501190016	125
16A1	103
16A1(FLEETWOOD)	123AP
16A2	103
16A2(FLEETWOOD)	123AP
16A545-7	123AP
16A667-GRN	199
16A667-ORG	199
16A667-RED	199
16A667-YEL	199
16A667G	123AP
16A667R	128
16A667Y	123AP
16A668-GRN	199
16A668-ORG	199
16A668-YEL	199
16A668G	123AP
16A668Y	123AP
16A669-GRN	199
16A669-YEL	199
16A669G	123AP
16A787	102
16A1938	123AP
16A6670	128
16A6680	128
16AC3D1	56014
16AC3D1L	56014
16AC3D1R	56014
16AC3DRIR	56014
16AC4ADIL	56014
16AC4D1	56014
16AC4D1L	56014
16B1	5025A
16B1(ZENER)	5025A
16B2	123AP
16B670-GRN	172A
16B670-RED	194
16B670-YEL	194
16B670R	287
16B670Y	287
16B-3A82	121MP
16C050C	5521
16C025C	5520
16C4	116
16C4B1P	166
16C10C	5522
16C15C	5523
16C20C	5524
16C25C	5525
16C30C	5526
16C40C	5527
16C50C	5528
16C60C	5529
16C70C	5530
16C80C	5531
16C-4	116
16C-4P	166
16E1330	123AP
16E1330(GE)	123AP
16F5	5892
16F10	5894
16F15	5894
16F20	5894
16F30	5898
16F40	5900
16F50	5902
16F60	5904
16F80	5908
16F100	5910
16FR5	5893
16FR10	5895
16FR20	5897
16FR40	5901
16FR60	5905
16FR80	5909
16FR100	5911
16G2	123AP
16G5	116
16G27	133
16G28	177
16G28A	177
16GN	107
16J1	108
16J2	108
16J2(DIODE)	116
16J2F	116
16J3	123AP
16K1	108
16K2	108
16K3	108
16L2	108
16L3	108
16L4	199
16L5	108
16L22	108
16L23	108
16L24	199
16L25	199
16L42	123AP
16L43	123AP
16L44	123AP
16L45	199
16L62	123AP
16L63	123AP
16L64	107
16L65	199
16N2	5075A
16P2	177
16P2881	172A
16P3367	172A
16RC2	5545
16RC2A	5541
16RC5	5545
16RC5A	5541
16RC10	5545
16RC10A	5542
16RC15	5545
16RC15A	5543
16RC20	5545
16RC20A	5543
16RC25	5545
16RC25A	5544
16RC30	5545
16RC30A	5544
16RC40	5545
16RC40A	5545
16RC50A	5546
16RC60	5547
16RC60A	5547
16S2-AW01-11	5074A
16ST-2SC945Q/R	85
16ST-2SD994	89
16SZ-AW01-11	5074A
16U1	123AP
16U1(HEATH KIT)	123AP
16U1(HEATH-KIT)	123AP
16X1	123AP
16X2	123AP
16X10	116
16X39	177
16X(ZENER)	5025A
16Z4	142A
16Z6	135A
16Z6A	135A
16Z6AF	135A
16Z6F	135A
17-1	151A
17-10	116
17-50(FISHER)	130
17-410	116
17-443	128
17-451	123AP
17-457	123AP
17-458	129
17-459	159
17-459A	159
17-12054-1	9930
17-12056-1	9932
17-12057-1	9933
17-12058-1	9946
17-12064-1	9962
17-12065-1	9945
17-12089-1	9951
17-12096-1	909
17-12097-1	910
17-RLB	234
17A4422-1	121
17P2	177
17S08	6358
17S08R	6359
17S10	6358
17S10R	6359
17S50	109
17TB3	5526
17TB4	5527
17TB5	5528
17TB6	5547
17TB7	5530
17TB8	5531
17Z6	136A
17Z6A	136A
17Z6AF	136A
17Z6F	136A
18-085001	116
18-085002	142A
18-22-17	116
18-148A	123AP
18-177-1	175
18-198-2	124
18-605	912
18-605-R0	912
18-607-2	199
18-3539-1	128
18/T2C	130
18=ST=2SC1815Y(AP)	85
18A	5027A
18A8-1	160
18A8-1-12	160
18A8-1-127	160
18A8-1L	160
18A8-1L8	160
18AA-1-82	121
18B1	5027A
18C815-0	123AP
18DB2A	167
18DB2A-C	167
18DB4A	168
18DB4A-C	168
18DB6A	169
18DB6A-C	170
18DB8A	170
18DB8A-C	170
18DB10A	170
18DB10A-C	170
18EB3	5027A
18J2	125
18J2F	125
18P2	116
18P-2A82	102A
18RC2	5541
18RC5	5541
18RC10	5542
18RC15	5545
18RC20	5543
18RC22	5541
18RC25	5544
18RC30	5544
18RC40	5545
18RC50	5546
18RC60	5547
18SI-SN76650N	749
18ST-2SC1815Y	85
18ST-2SC1815Y(AP)	85
18ST-2SC1815YAP	85
18ST-2SC2371M	157
18ST-2SD478C	375
18ST-BU205-01	165
18Z6	137A
18Z6A	137A
18Z6AF	137A
18Z6F	137A
19-076001	1003
19-085005	109
19-020071	123AP
19-00-3485	175
19-020-001	126
19-020-002	126
19-020-003	102A
19-020-005	126
19-020-007	102A
19-020-050	128
19-020-070	229
19-020-015	102
19-020-019	213
19-020-031	160
19-020-032	160
19-020-033	100
19-020-034	102A
19-020-035	102A
19-020-036	102A
19-020-037	108
19-020-038	128
19-020-043	123AP
19-020-043A	123AP
19-020-044	108
19-020-045	175
19-020-046	154
19-020-048	108
19-020-052	108
19-020-056	152
19-020-058	123AP
19-020-066	152
19-020-067	123AP
19-020-071	107
19-020-072	311
19-020-073	123AP
19-020-074	123AP
19-020-075	128
19-020-076	195A
19-020-077	195A
19-020-078	237
19-020-079	703
19-020-081	6401
19-020-44	108
19-020-100	129
19-020-101	186
19-020-102	187
19-020-111	325
19-020-112	320
19-020-114	159
19-020-115	132
19-040-002	116
19-040-003	116
19-040-004	116
19-080-001	177
19-080-002	116
19-080-008	177
19-080-009	109
19-080-014	5010A
19-090-007	5063A
19-090-008	141A
19-090-008A	140A
19-090-014	5010A
19-090-015	134A
19-003935	130
19-085010	116
19-085016	614
19-085017	138A
19-085018	109
19-085022	116
19-05589	7470
19-09234	941
19-09973-0	7401
19-09981-0	923
19-1	159
19-2	159
19-2-02616	123AP
19-3	159
19-10	159
19-20	159
19-30	159
19-130-001(DIODE)	177
19-130-004	74145
19-130-005	7490
19-3349	128
19-3415	158
19-3416	158
19-3692	128
19-3934-643	128
19-3935-641	190
19-10298-00	941M
19-10415-00	923D
19-10476-0	74H01
19-15840	128
19-19420	108
19-100001	125
19A11530P1	233
19A11552B-P1	137A
19A11644P1	708
19A115024-P4	116
19A115024-P6	125
19A115056-P1	127
19A115061-P1	123AP
19A115061-P2	123AP
19A115077-P1	102
19A115077-P2	102
19A115086-P1	109
19A115087-P1	126
19A115089	5874
19A115094-P1	105
19A115098	126
19A115098-P1	126
19A115099-P1	126
19A115100-P1	116
19A115100P1	177
19A115101	121
19A115101-P1	121
19A115102-P1	123AP
19A115103-P1	101
19A115108-P1	123AP
19A115108-P2	123AP
19A115123-2	123AP
19A115123-P1	123AP
19A115123-P2	123AP
19A115123P1	85
19A115129-2	103
19A115129-P1	103
19A115140-P1	160
19A115140-P2	160
19A115142-P1	123AP
19A115142-P2	123AP
19A115145-P3	116
19A115145-P4	116
19A115157-1	123AP
19A115167-2	123AP
19A115178-P1	159
19A115178-P2	159
19A115180-2	129
19A115184-P1	121
19A115192-P1	160
19A115192-P2	160
19A115200-P1	152
19A115201-P1	101
19A115201-P2	101
19A115208	100
19A115208-P1	100
19A115208-P2	100
19A115238-2	128
19A115238-P1	128
19A115245-P1	123AP
19A115245-P2	123AP
19A115247P1	129
19A115249-1	108
19A115249P1	161
19A115250	519
19A115253-P1	123AP
19A115253-P2	123AP
19A115267P1	121
19A115268	121
19A115281-P1	102
19A115293P1	121
19A115293P2	121
19A115300	128
19A115300-1	128
19A115300-2	128
19A115300-P1	186
19A115300-P2	186
19A115300-P3	186
19A115300P1	128
19A115301-P1	100
19A115301-P2	100
19A115304-2	128
19A115315-P1	123AP
19A115315-P2	123AP
19A115322	112
19A115322-P1	112
19A115328-1	123AP
19A115328-P1	123A
19A115328-P2	123A
19A115330	123AP
19A115341P1	121
19A115342-1	108
19A115342-2	161
19A115342-P1	123AP
19A115342-P2	123AP
19A115342P1	161
19A115359-P1	123AP
19A115359-P2	123AP
19A115361-P1	121
19A115362-P1	123AP
19A115362-P2	123AP
19A115362P1	199
19A115364P1	6401
19A115371-1	177
19A115376	121
19A115385-P1	121
19A115387P1	102
19A115410-P1	123AP
19A115410-P2	123AP
19A115413P1	160
19A115440-1	108
19A115440-2	108
19A115441-1	108
19A115458-P1	159
19A115458-P2	159
19A115460-P1	5545
19A115487-P1	105
19A115487P1	105
19A115527	175
19A115527-1	175
19A115527-P1	175
19A115527P1	175
19A115528-P1	137A
19A115528-P3	139A
19A115531-P1	127
19A115540-P1	105
19A115546-P1	101
19A115546-P2	101
19A115548-P1	100
19A115552-P1	123AP
19A115552-P2	123AP
19A115552P1	85
19A115552P2	123AP
19A115553-P1	160
19A115554-P1	160
19A115554-P2	160
19A115556-P1	100
19A115561	121
19A115561-1	121
19A115562P2	129
19A115567-P1	160
19A115567-P2	160
19A115569-P1	116
19A115569-P2	116
19A115591P1	123AP
19A115591P2	123AP
19A115623-P1	124
19A115623-P2	124
19A115628-P1	160
19A115628-P2	160
19A115635-1	160
19A115635-P1	160
19A115636-P1	160
19A115653-P1	159
19A115653-P2	159
19A115654-P1	159
19A115654-P2	159
19A115661P1	519
19A115665-P1	160
19A115665-P2	160
19A115666-1	108
19A115673-P1	101
19A115673-P2	101
19A115674-P1	102A
19A115674-P2	102A
19A115683-P1	5545
19A115683-P2	5545
19A115688-P1	159
19A115688-P2	159
19A115706-1	159
19A115706-2	159
19A115706-P1	159
19A115706-P2	159
19A115706P1	129
19A115720-1	123AP
19A115720-2	123AP
19A115728-1	123AP
19A115728-2	123AP
19A115747-P1	5545
19A115768-1	159
19A115768-2	159
19A115768-3	159
19A115768-P1	159
19A115768-P2	159
19A115768P1	159
19A115774P1	130
19A115779P1	159
19A115783-1	124
19A115786	123AP
19A115786A	123AP
19A115810P1	311
19A115817P1	124
19A115818	181
19A115852P1	159
19A115889-P1	128
19A115889-P2	128
19A115889-P3	128
19A115889P1	85
19A115910P1	123AP
19A115913-1	9930
19A115913-2	9951
19A115913-3	9932
19A115913-4	9933
19A115913-10	9093
19A115913-19	9946
19A115913-20	9962
19A115913P2	9951
19A115913P14	9936
19A115925-1	108
19A115944P1	123AP
19A115944P2	123AP
19A115976P1	129
19A116060P1	320
19A116081	177
19A116118-1	152
19A116118-2	152
19A116118-I	152
19A116118P1	152
19A116118P2	152
19A116180-7	7440
19A116180-8	7450
19A116180-11	7454
19A116180-18	7486
19A116180-22	7486
19A116180-24	7490
19A116180-25	7491
19A116180-27	7492
19A116180-29	7495
19A116180-P13	7470
19A116180P1	7400
19A116180P2	7401
19A116180P3	7402
19A116180P4	7410
19A116180P5	7420
19A116180P7	7440
19A116180P8	7450
19A116180P11	7454
19A116180P15	7473
19A116180P16	7474
19A116180P18	7486
19A116180P20	7404
19A116203P2	390
19A116223P1	159
19A116297P3	941
19A116297P3-9	941
19A116297P3-10	941
19A116375	153
19A116375P1	153
19A116408-1	159
19A116445	709
19A116549P1	909
19A116623	912
19A116642P1	5401
19A116742P1	196
19A116753P1	181
19A116755P1	123AP
19A116760P1	183
19A116761P1	130
19A116774-P1	123AP
19A116774P1	123AP
19A116796-1	704
19A116841P1	923
19A116865	123AP
19A116868P1	346
19A116899P1	123A
19A116953P1	363
19A116953P2	364
19A116965P1	348
19A123160-1	108
19A123160-2	108
19A126265-1	160
19A126265-2	160
19A126813	130
19A126813A	130
19A126826-P2	181
19A129181P1	349
19A129181P2	351
19A129181P3	320
19A129181P4	320
19A129183P1	198
19A129207P1	123AP
19A134060P1	349
19A134060P2	351
19A134060P3	351
19A134060P4	320
19A134137P1	133
19A134164P1	363
19A134164P2	363
19A134171P1	366
19A134171P3	366
19A134239P3	366
19A134242P1	368
19A134340P4	477
19A134432P1	482
19A134433P1	485
19A134447P1	316
19AI15527-1	175
19AR2	116
19AR3	109
19AR5	116
19AR6-1	103A
19AR6-2	103A
19AR6-3	103A
19AR7-1	102A
19AR7-2	102A
19AR8	110MP
19AR11	116
19AR12	116
19AR13-1	160
19AR13-2	160
19AR13-3	160
19AR13-4	160
19AR14-1	102A
19AR14-2	102A
19AR16-1	102A
19AR16-2	102A
19AR17	116
19AR18	160
19AR19-1	102A
19AR19-2	102A
19AR20	123AP
19AR21	106
19AR22	110MP
19AR24	160
19AR25	102A
19AR26	102A
19AR27	102A
19AR29	113A
19AR29-1	113A
19AR30	118
19AR31	121
19AR32	102A
19AR34	116
19AR35	124
19AR36	123AP
19B200011-P1	5874
19B200011-P2	5874
19B200011-P3	5874
19B200011-P4	5874
19B200011-P5	116
19B200054-P1	102A
19B200061-P1	102A
19B200061-P2	102A
19B200061-P3	102A
19B200061-P4	102A
19B200063-P1	102A
19B200065-P1	101
19B200065-P2	101
19B200129-P1	100
19B200130-P1	160
19B200130-P2	160
19B200132-P1	102
19B200132-P2	102
19B200132-P3	102
19B200132-P4	102
19B200210-P1	102A
19B200210-P2	102A
19B200210-P3	102A
19B200248-P1	5455
19B200248-P2	5455
19B200248-P3	5455
19B200249-P1	177
19B200249-P2	177
19B200249-P3	177
19B200379-P1	139A
19B2000129-P1	100
19B2000130-P1	160
19B2000130-P2	160
19B2000132-P1	102A
19B2000132-P2	102A
19B2000132-P3	102A
19B2000132-P4	102A
19C300LL5-1	128
19C300073-P1	102
19C300073-P2	102
19C300073-P3	102
19C300073-P4	102
19C300073-P5	102
19C300073-P6	102
19C300074-P2	102
19C300076-P1	116
19C300076-P2	116

PART NUMBER	NTE REPLACEMENT
19C300076-P3	116
19C300076-P4	116
19C300076-P5	116
19C300076-P6	116
19C300113-P1	121
19C300114-P1	123AP
19C300114-P2	123AP
19C300114P1	123AP
19C300114P2	123AP
19C300114P3	123AP
19C300115-1	128
19C300115-P1	128
19C300128-P1	102
19C300128-P2	102
19C300128-P3	102
19C300128-P4	102
19C300128-P5	102
19C300128-P6	102
19C300128-P7	102
19C300128-P8	102
19C300138-P4	102
19C300138-P8	102
19C300216-P1	160
19C300216-P2	160
19C307022	614
19C307022-P1	614
19C3001414P2	123AP
19CC19	138A
19L-4A82	102A
19P1	177
19P2	116
19Q820	519
19QC17	107
19QC19	234
19SZ-WZ-120	5021A
19Z6AF	5071A
19Z6F	5071A
20	5135A
20-00229-001	108
20-00444-001	108
20-0352	904
20-1	108
20-3	5029A
20-16-3	109
20-22-08	116
20-1111-002	130
20-1111-003	130
20-1680-143	116
20-1680-174	128
20-1680-175	109
20-1680-189	158
20-161002	177
20-JLM	159
20-SI-TA7607AP	1545
20A0007	102A
20A0009	102A
20A0060	189
20A0015	102A
20A0017	121
20A0041	121
20A0042	121
20A0053	123AP
20A0054	116
20A0055	128
20A0059	189
20A0073	123AP
20A0074	121
20A0075	129
20A0076	128
20A1	5801
20A2	5802
20A3	5803
20A4	5804
20A5	5805
20A6	5806
20A8	5808
20A9M	109
20A10	5809
20A11	177
20A13	177
20A70	109
20A79	109
20A90	110MP
20A90HMP	110MP
20A90LF	109
20A90M	109
20A90MLF	109
20A10849	123AP
20A-70	109
20A-90	110MP
20A-90H	109
20A-90M	109
20AS	116
20B1M	703
20B2M	703
20B3AH	703
20B409	135A
20B410	135A
20BS	116
20C	116
20C1	5801
20C2	5802
20C3	5803
20C4	5804
20C5	5805
20C6	5806
20C9	5808
20C10	5808
20C71	102A
20C72	102A
20CTQ030	6087
20CTQ040	6087
20CTQ035	6087
20CTQ045	6087
20D2	125
20D2L	125
20D4	125
20E10	125
20E10FA13	125
20E-54-5411	5695
20EB	5029A
20F1	5834
20F5	5912
20F10	5916
20F15	5916
20F20	5916
20F30	5918
20F40	5920
20F60	5924
20F80	5928
20F100	5932
20FQ020	6084
20FQ030	6084
20FQ040	6084
20FQ035	6084
20FQ045	6084
20FR5	5913
20FR10	5915
20FR20	5917
20FR30	5919
20FR40	5921
20FR50	5923
20FR60	5925
20FR80	5929
20FR100	5933
20H	116
20H2	5874
20H3	5874
20H3P	5854
20H3PN	5855
20HA3	5994
20HB5	5912
20HB20	5916
20HB40	5920
20J2	5874
20J3P	5874
20JH3	6026
20K	116
20M	116
20M10	6020
20M20	6026
20M30	6030
20M40	6034
20M50	6038
20M60	6040
20M80	6042
20M100	6044
20MA10	6023
20MA20	6027
20MA30	6031
20MA40	6035
20MA60	6041
20MA80	6043
20MA100	6045
20MC	160
20N1	116
20N2	5874
20N3	5874
20P1S	5542
20P2	5874
20P2S	5543
20P3	5874
20P3S	5544
20P4S	5545
20P5S	5546
20P6S	5547
20Q3	5897
20R2	5980
20R3	5990
20S3	5990
20S4	5990
20S5	5834
20SI-TA7607AP	1545
20TB3	5544
20TB4	5545
20TB5	5546
20TB6	5547
20V-HG	102A
20V-MG	100
20X	5029A
20Y	5029A
20Y(ZENER)	5029A
20Z6AF	138A
20Z6F	138A
21-0101	192
21-1	123AP
21-1AA	6402
21-1AA(MAGNAVOX)	6402
21-1L	123AP
21-2	107
21-4	107
21-6	107
21-7	107
21-28	121
21-32	126
21-33	126
21-34	102
21-35	124
21-36	102
21-37	102
21-606-0001	177
21-606-0001-00H	177
21-608-4148-006	519
21-609-3595-009	177
21-810	116
21-810-2	116
21A001-000	116
21A001-00	116
21A002	113A
21A002-000	113A
21A003-016	109
21A004-000	506
21A005	120
21A005-000	102A
21A006-000	116
21A007-000	116
21A008-000	116
21A008-001	116
21A008-002	506
21A008-003	116
21A008-008	177
21A008-016	120
21A009	177
21A009-000	109
21A009-002	110MP
21A009-008	177
21A009-009	177
21A020-001	116
21A020-005	109
21A020-006	116
21A040-000	102A
21A040-001	109
21A040-003	108
21A040-004	108
21A040-005	102A
21A040-007	108
21A040-010	108
21A040-020	123AP
21A040-050	129
21A040-060	158
21A040-014	102A
21A040-015	132
21A040-016	108
21A040-017	108
21A040-019	108
21A040-021	102A
21A040-022	102A
21A040-023	107
21A040-024	107
21A040-025	107
21A040-031	126
21A040-032	289A
21A040-033	123AP
21A040-033A	123AP
21A040-034	123AP
21A040-035	176
21A040-036	158
21A040-037	123AP
21A040-045	229
21A040-046	233
21A040-047	233
21A040-049	129
21A040-051	128
21A040-051(DIODE)	139A
21A040-051(TRANS)	192
21A040-052	152
21A040-053	229
21A040-054	107
21A040-055	107
21A040-056	123AP
21A040-057	102A
21A040-058	102A
21A040-059	159
21A040-061	158
21A040-063	107
21A040-064	199
21A040-065	199
21A040-066	199
21A040-067	199
21A040-068	1075A
21A040-077	123AP
21A040-078	123AP
21A040-079	102A
21A040-081	158
21A040-082	199
21A040-083	199
21A040-091	229
21A040-092	123AP
21A040-36	158
21A040-37	123AP
21A040-44	116
21A040-54	229
21A050-000	160
21A050-001	160
21A050-004	108
21A015-001	102A
21A015-002	155
21A015-003	131
21A015-004	108
21A015-005	103A
21A015-006	102A
21A015-008	159
21A015-008A	159
21A015-009	159
21A015-009A	159
21A015-020	123AP
21A015-011	159
21A015-011A	159
21A015-012	159
21A015-012A	159
21A015-013	123AP
21A015-014	108
21A015-016	108
21A015-018	128
21A015-019	128
21A015-021	155
21A015-022	131
21A015-025	159
21A015-026	128
21A015-027	123AP
21A037-001	5021A
21A037-003	142A
21A037-006	5100A
21A037-008	142A
21A037-009	5079A
21A037-020	5074A
21A037-012	5072A
21A037-016	5096A
21A037-017	5075A
21A037-018	143A
21A037-021	5098A
21A038-000	102A
21A039-000	102A
21A041-002	614
21A041-003	614
21A045-000	160
21A048-000	160
21A049-000	160
21A051-000	100
21A053-000	102A
21A054-000	102A
21A055-000	102A
21A062-000	106
21A063-000	102
21A064-000	121
21A074-000	102A
21A079-000	116
21A097-000	121
21A1	120
21A2	113A
21A3	118
21A6	116
21A7	116
21A11-002	601
21A13-041	614
21A101-001(RECT)	116
21A101-002	711
21A101-002(BLANKER)	177
21A101-004	1047
21A101-005	1046
21A101-006	1089
21A101-010	1091
21A101-014	749
21A101-015	747
21A101-017	714
21A101-018	1050
21A101-2	711
21A102-001	116
21A102-002	170
21A103-005	614
21A103-006	110MP
21A103-007	116
21A103-010	109
21A103-050	116
21A103-060	614
21A103-070	116
21A103-011	109
21A103-012	125
21A103-013	125
21A103-015	125
21A103-016	110MP
21A103-017	109
21A103-018	116
21A103-019	109
21A103-021	116
21A103-022	109
21A103-043	600
21A103-044	116
21A103-045	5074A
21A103-046	109
21A103-047	614
21A103-048	110MP
21A103-049	138A
21A103-052	109
21A103-055	109
21A103-058	116
21A103-064	139A
21A103-065	177
21A103-069	614
21A103-104	125
21A103-064	139A
21A105-001	108
21A105-004	128
21A105-006	128
21A108-001	177
21A108-002	139A
21A108-003	519
21A108-004	519
21A109-001	109
21A109-002	109
21A109-003	110MP
21A109-022	109
21A110-001	116
21A110-002	116
21A110-003	116
21A110-004	125
21A110-005	506
21A110-006	506
21A110-007	116
21A110-008	506
21A110-009	506
21A110-010	116
21A110-012	116
21A110-013	506
21A110-014	525
21A110-071	506
21A110-072	125
21A111-001	177
21A111-002	177
21A112-001	159
21A112-002	129
21A112-003	159
21A112-004	193
21A112-006	506
21A112-007	107
21A112-010	161
21A112-020	85
21A112-050	123AP
21A112-070	198
21A112-090	123AP
21A112-013	123AP
21A112-015	123AP
21A112-017	123AP
21A112-018	123AP
21A112-019	199
21A112-023	164
21A112-025	124
21A112-029	124
21A112-031	100
21A112-033	124
21A112-036	238
21A112-045	199
21A112-046	199
21A112-047	159
21A112-048	187
21A112-049	186
21A112-058	199
21A112-062	199
21A112-063	199
21A112-065	159
21A112-071	198
21A112-074	194
21A112-075	159
21A112-084	229
21A112-085	123AP
21A112-086	108
21A112-087	108
21A112-088	123AP
21A112-089	123AP
21A112-091	123AP
21A112-092	123AP
21A112-093	159
21A112-094	153
21A112-095	152
21A112-096	124
21A112-098	198
21A112-099	198
21A112-100	159
21A112-101	229
21A112-102	159
21A112-103	165
21A112-104	123AP
21A112-107	162
21A112-120	399
21A112-124	283
21A112-125	292
21A112-126	292
21A113-002	132
21A118-002	85
21A118-008	198
21A118-029	152
21A118-031	289
21A118-032	193
21A118-036	238
21A118-049	236
21A118-063	291
21A118-096	157
21A118-100	198
21A118-114	94
21A118-120	399
21A118-122	398
21A118-124	283
21A118-131	107
21A118-137	85
21A118-139	290A
21A118-140	85
21A118-153	157
21A118-201	85
21A118-233	186A
21A118-234	379
21A118-235	379
21A118-236	315
21A118-237	184
21A118-238	184
21A119-005	109
21A119-008	143A
21A119-030	116
21A119-080	177
21A119-034	5021A
21A119-038	5018A
21A119-041	136A
21A119-045	615P
21A119-049	5029A
21A119-064	5013A
21A119-068	506
21A119-073	5073A
21A119-075	116
21A119-077	125
21A119-078	552
21A119-079	116
21A119-107	519
21A119-108	5010A
21A119-123	109
21A119-187	156
21A119-189	116
21A119-190	552
21A120-001	749
21A120-002	747
21A120-008	1045
21A120-050	1406
21A120-045	1257
21A120-046	4011B
21A120-049	1416
21A120-052	1417
21A120-074	1437
21A120-208	1246
21A404-066	199
21A500	120
21A500-000	120
21A112095	152
21B1AH	731
21B-14	116
21B-17	116
21F1SC	5916
21F2SC	5916
21F3SC	5990
21FQ030	6084
21FQ040	6084
21FQ035	6084
21FQ45	6084
21K60	109
21M006	126
21M007	100
21M020	159
21M018	614
21M022	159
21M025	187
21M026	187
21M027	193
21M028	187
21M084	123AP
21M085	123AP
21M086	123AP
21M087	199
21M091	199
21M093	107
21M094	107
21M095	199
21M096	199
21M099	107
21M60	123AP
21M122	123AP
21M123	123AP
21M124	199
21M125	123AP
21M137	199
21M138	234
21M139	123AP
21M140	107
21M146	123AP
21M149	123AP
21M150	123AP
21M151	107
21M152	107
21M153	107
21M154	107
21M160	199
21M161	199
21M170	199
21M174	199
21M178	107
21M179	107
21M180	186
21M181	186
21M182	107
21M183	186
21M184	186
21M185	128
21M186	123AP
21M188	107
21M192	192
21M193	192
21M196	132
21M200	123AP
21M205	123AP
21M214	139A
21M224	132
21M228	128
21M248	116
21M283	116
21M286	186
21M288	109
21M288(DIODE)	109
21M288(TRANS)	123AP
21M289	110MP
21M302	116
21M307	139A
21M312	116
21M315	116
21M316	614
21M317	116
21M323	109
21M325	110MP
21M330	177
21M345	187
21M355	159
21M366	123AP
21M367	186
21M369	186
21M386	116
21M386(PWR)	116
21M387	128
21M395	187
21M408	199
21M412	132
21M415	177
21M416	116
21M417	116
21M419	116
21M432	109
21M432(REG)	143A
21M433	116
21M434	116
21M435	116
21M436	116
21M437	116
21M443	187
21M446	199
21M448	128
21M455	128
21M459	193
21M465	185
21M466	184
21M469	116
21M476	108
21M481	108
21M485	1142
21M487	116
21M488	123AP
21M492	614
21M493	140A
21M502	614
21M506	799
21M519	116
21M520	123AP
21M526	614
21M532	1006
21M534	132
21M541	297
21M545	116
21M550	199
21M556	186
21M562	177
21M562(DIODE)	177
21M562(TRANS)	123AP
21M563	123AP
21M568	110MP
21M577	229
21M578	123AP
21M579	123AP
21M581	159
21M582	1124
21M583	614
21M584	139A
21M585	139A
21M586	178MP
21M588	722
21M590	116
21M594	109
21M599	722
21M600	722
21M603	199
21M604	234
21M605	123AP
21M606	192
21M859	812
21MO28	187
21MW132	102
21R05S	5980
21R1S	5916
21R2S	5916
21R3S	5990
21R4S	5990
21R5S	5992
21R6S	5994
21R8S	5998
21R10S	6002
21RECT-S1-1039	116
21RECT-SI-1037(AU)	116
21RECT-SI-1039	116
21SZ-RD13EB1	5022A
21Z6AF	5072A
21Z6F	5072A
22-001001	123AP
22-002001	131
22-001002	108
22-004003	109
22-001003	108
22-004004	125
22-001004	108
22-070005	708
22-001005	108
22-001006	123AP
22-002006	102
22-001007	123AP
22-002007	102A
22-001008	175
22-002008	131
22-002009	131
22-001009	175
22-001010	159
22-0030	292
22-0028	291
22-0029	241
22-0031	292
22-0107	123A
22-0150	145A
22-0180	5077A
22-0220	5080A
22-0141	128
22-0416	525
22-0723	923
22-1	5030A
22-1(ZENER)	5030A
22-1-005	109
22-1-044	177
22-1-075	116
22-1-5	109
22-1-70	177
22-1-127	614
22-1-129	109
22-1-130	612
22-1-132	5070A
22-1-138	116
22-2070	116
22-3056	130
22-3440	396
22-3773	284
22-4136	997
22-4250	159
22-4303(SDG)	467
22-4558	778A
22-4888	397
22-5000	725
22-5184	287
22-7404	74C04
22A001-17	116
22E8	100

PART NUMBER	NTE REPLACEMENT
22E89	176
22R2	5916
22R22	5916
22RC2	5541
22RC5	5541
22RC10	5545
22RC15	5545
22RC20	5543
22RC25	5544
22RC30	5544
22RC40	5545
22RC50	5546
22RC60	5547
22SA1246T	290A
22ST-2SA1015-0	290A
22ST-2SA10150	290A
22Z6AF	139A
22Z6F	139A
23	123AP
23-0003	116
23-0004	116
23-0010	116
23-001R03A10	519
23-001R03AA10	519
23-0017	116
23-0018	125
23-1	159
23-2	159
23-3	159
23-10	159
23-20	159
23-30	159
23-5006	102
23-5007	102
23-5009	121
23-5014	102A
23-5017	102A
23-5020	107
23-5021	107
23-5022	107
23-5023	107
23-5024	107
23-5025	107
23-5026	107
23-5027	107
23-5029	107
23-5031	175
23-5032	131
23-5032(NPN)	155
23-5032(PNP)	131
23-5033	126
23-5034	158
23-5035	130
23-5037	128
23-5038	130
23-5039	128
23-5041	130
23-5042	121
23-5044	172A
23-5045	129
23-5048	102
23-5048(NPN)	103A
23-5048(PNP)	102A
23-5051	225
23-5052	123
23-6001-16	158
23-6001-17	158
23-6001-20	158
23-6001-21	158
23-6001-23	158
23-LLB	159
23-PT274-120	161
23-PT274-121	123AP
23-PT274-122	159
23-PT274-123	161
23-PT274-125	177
23-PT275-121	161
23-PT275-122	108
23-PT275-124	112
23-PT283-122	161
23-PT283-124	161
23-PT283-125	177
23-PT284-122	160
23-PT284-123	160
23B114044	123AP
23B114053	128
23B114054	128
23B210679-1	118
23B-210-025	121
23B-210-230-2	127
23BSC101	116
23D	172A
23E001-1	123AP
23J2	177
23SB824	378
23ST-2SA733Q/R(AV)E	290A
23ST-MPS9682J	159
23TB1	5542
23TB2	5543
23TB3	5544
23TB4	5545
23TB5	5546
23TB6	5547
23Z6AF	140A
23Z6F	140A
24(SHARP)	5082A
24-0003714-1	123AP
24-000451	123AP
24-000452	128
24-000457	123AP
24-000653-1	123AP
24-002	123AP
24-001326	199
24-001327-1	123AP
24-001354	199
24-016	107
24-016-001	106
24-016-005	107
24-198	116
24-602-25	123AP
24-3564	108
24-28201	177
24-AWH	159
24-DP1	116
24A	123AP
24A1	108
24B	5031A
24B1	123AP
24B1AH	731
24B1B	731
24B1Z	731
24B2	5031A
24B4	5031A
24B4(ZENER)	5031A
24B(ZENER)	5031A
24DP1	116
24E-000	614
24E-001	177
24E-001C	614
24E-002	112
24E-002-0	112
24E-002-C	112
24E-006	177
24E-022	112
24J2	177
24M125	199
24MW11	100
24MW15	102
24MW16	102
24MW27	102A
24MW28	102A
24MW29	102
24MW34	102A
24MW43	102
24MW44	160
24MW55	160
24MW59	160
24MW60	102
24MW61	126
24MW69	102
24MW70	102
24MW74	126
24MW76	614
24MW77	100
24MW78	102
24MW83	102
24MW84	102
24MW87	109
24MW107	102
24MW111	102A
24MW115	102
24MW116	102
24MW119	123AP
24MW122	110MP
24MW130	103
24MW132	102
24MW152	126
24MW156	102
24MW157	160
24MW175	117
24MW178	102A
24MW179	102A
24MW185	102A
24MW186	102
24MW187	102A
24MW192	166
24MW196	117
24MW197	116
24MW199	109
24MW205	126
24MW207	138A
24MW208	116
24MW227	116
24MW241	116
24MW243	109
24MW244	110MP
24MW246	125
24MW256	158
24MW263	102
24MW267	116
24MW268	116
24MW269	116
24MW271	126
24MW287	107
24MW303	126
24MW331	139A
24MW333	123AP
24MW339	160
24MW340	160
24MW350	160
24MW351	160
24MW352	126
24MW353	126
24MW361	107
24MW368	126
24MW370	102A
24MW372	123AP
24MW384	102A
24MW405	160
24MW406	160
24MW407	160
24MW408	102
24MW441	102A
24MW454	123AP
24MW458	123AP
24MW460	123AP
24MW461	123AP
24MW525	160
24MW535	107
24MW593	107
24MW594	107
24MW595	107
24MW596	107
24MW597	107
24MW598	102A
24MW599	102A
24MW600	102A
24MW601	102A
24MW602	125
24MW603	109
24MW605	125
24MW607	115
24MW608	102A
24MW609	123AP
24MW613	102A
24MW614	102A
24MW615	102A
24MW618	131MP
24MW619	116
24MW652	312
24MW653	107
24MW654	108
24MW655	123AP
24MW656	107
24MW 656	107
24MW657	108
24MW658	123AP
24MW659	123AP
24MW660	128
24MW661	159
24MW662	152
24MW663	128
24MW664	614
24MW665	110MP
24MW667	177
24MW669	116
24MW670	5073A
24MW671	116
24MW673	107
24MW674	128
24MW675	108
24MW676	123AP
24MW677	128
24MW700	107
24MW714	128
24MW721	116
24MW723	132
24MW724	108
24MW725	108
24MW726	614
24MW727	129
24MW734	614
24MW736	132
24MW737	107
24MW738	107
24MW739	108
24MW740	123AP
24MW741	158
24MW742	5071A
24MW743	140A
24MW744	177
24MW746	102
24MW747	100
24MW748	102
24MW760	123AP
24MW763	102
24MW764	102
24MW765	102
24MW768	116
24MW771	109
24MW772	116
24MW773	123AP
24MW774	123AP
24MW775	123AP
24MW776	123AP
24MW777	102A
24MW778	152
24MW779	125
24MW780	102A
24MW781	102A
24MW782	102A
24MW783	158
24MW785	177
24MW789	102A
24MW790	123AP
24MW793	107
24MW795	123AP
24MW796	123AP
24MW797	123AP
24MW799	102A
24MW801	123AP
24MW805	107
24MW807	123AP
24MW808	123AP
24MW809	123AP
24MW812	107
24MW813	107
24MW814	107
24MW815	107
24MW816	126
24MW817	123AP
24MW818	123AP
24MW819	158
24MW820	110MP
24MW823	123AP
24MW824	102A
24MW825	177
24MW826	199
24MW827	108
24MW828	176
24MW829	125
24MW851	116
24MW852	108
24MW853	102A
24MW854	123AP
24MW855	123AP
24MW856	102A
24MW857	102A
24MW858	177
24MW860	109
24MW861	177
24MW862	116
24MW863	107
24MW864	125
24MW865	108
24MW867	116
24MW871	116
24MW874	123AP
24MW892	102A
24MW893	102A
24MW894	177
24MW895	102
24MW896	106
24MW899	123AP
24MW924	125
24MW950	614
24MW953	107
24MW954	123AP
24MW955	614
24MW956	177
24MW957	161
24MW958	161
24MW961	123AP
24MW964	199
24MW965	199
24MW967	109
24MW973	158
24MW974	117
24MW975	117
24MW976	159
24MW977	152
24MW978	184
24MW988	123AP
24MW989	132
24MW990	199
24MW991	126
24MW992	123AP
24MW994	131
24MW995	116
24MW997	1024
24MW998	139A
24MW1022	199
24MW1023	123AP
24MW1024	123AP
24MW1025	199
24MW1028	1003
24MW1029	109
24MW1030	109
24MW1031	159
24MW1038	108
24MW1040	158
24MW1043	109
24MW1049	159
24MW1051	109
24MW1052	614
24MW1057	107
24MW1058	107
24MW1059	123AP
24MW1060	199
24MW1061	159
24MW1062(NPN)	192
24MW1062(PNP)	193
24MW1063	614
24MW1065	140A
24MW1066	116
24MW1067	109
24MW1068	123AP
24MW1069	123AP
24MW1071	116
24MW1081	107
24MW1082	108
24MW1083	102A
24MW1084	102A
24MW1089	123AP
24MW1092	109
24MW1096	123AP
24MW1106	107
24MW1107	5069A
24MW1108	116
24MW1109	177
24MW1110	1032
24MW1112	614
24MW1113	116
24MW1115	102A
24MW1116(NPN)	103A
24MW1116(PNP)	158
24MW1118	156
24MW1120	123AP
24MW1122	222
24MW1123	116
24MW1124	113A
24MW1125	140A
24MW1141	123AP
24MW1143	184
24MW1144	116
24MW1146	116
24MW1147	123AP
24MW1152	192
24MW1161	128
24MW1162	116
24MW7796	123AP
24R	123AP
24R2	5990
24ST-MPS9410AJ	123AP
24ST-MPS9700G	123AP
24T016001	107
24T013003	107
24T016005	107
24T013005	107
24T002	107
24T011-008	108
24T011-012	161
24T016	107
24T021	161
24T-002	108
24T-009	199
24T-011-001	161
24T-011-003	107
24T-011-008	108
24T-011-011	159
24T-011-013	229
24T-011-015	107
24T-013-003	161
24T-013-005	108
24T-015-013	123AP
24T-016	107
24T-016-001	108
24T-016-005	108
24T-016-010	107
24T-016-0B	107
24T-016-013	108
24T-016-015	108
24T-016-016	108
24T-016-024	107
24T-016-(016)	199
24T-026-001	133
24TB2	5524
24TB3	5526
24TB4	5527
24TB5	5528
24TB6	5547
24TB7	5530
24TB8	5531
24Z6AF	5074A
24Z6F	5074A
25-000453	159
25-000456-1	234
25-000462	159
25-0060-4	123AP
25-001328	106
25-3	109
25-5	116
25-7	125
25-1026-01	5313
25-37833-2	909D
25-100015	108
25-MEF	159
25-SD-1N60-TMS	109
25A	108
25A1	123AP
25A2	123AP
25A321	160
25A324	160
25A440A	160
25A473Y	153
25A561Y	159
25A1262-005	108
25A1273-001	123AP
25A1281-001	108
25A-1-0959B	5016A
25A-1-1	151A
25A-1-4004	116
25A-1-4148	519
25A-1-5275A	5054A
25A-2-1	287
25A-2-2	263
25A-2-3	5411
25A-2-2584	384
25A-2-3440	396
25A-2-3904	123AP
25A-2-4403	159
25A-2-5060	5400
25A-2-5401	288
25A-6-2	5313
25A-70-1	916
25A-71-22	435P22
25A-71-24	428
25A-71-40	430
25A-74LS00	74LS00
25A-78L05-ACP	977
25A-74107N	74107
25A-F9602PC	9602
25A-LM-323K	931
25A-LM-324N	987
25A-LM-380N	740A
25A-LM-556N	978
25A-MC6800L	6800
25A-MC6810AP	6810
25A-MC6820P	6821
25A-MC14011B	4011B
25A-MC14049B	4049
25A-MC14050B	4050B
25A-MC14502B	4502B
25A-MC14514B	4514B
25A-MC-3340P	829
25A-P5101L	65101
25A-UA-555	955M
25AM624	108
25B	108
25B1	108
25B1C	730
25B1T	730
25B2	229
25B2C	730
25B2T	730
25B21	123AP
25B186	102
25B375A-NB	127
25B378	102A
25B496	100
25B-1	108
25C05	5980
25C05R	5981
25C10	5982
25C10R	5983
25C15	5986
25C15R	5987
25C20	5986
25C30	5988
25C30R	5989
25C40	5990
25C40R	5991
25C50	5992
25C50R	5993
25C60	5994
25C60R	5995
25C70R	5999
25C80	5998
25C80R	5999
25C90	6002
25C90R	6003
25C100	6002
25C100R	6003
25C206	108
25C536E	102
25C945(L)-Q	85
25CS58LGBM	123AP
25D10	125
25F-B1F	167
25G5	6020
25G5R	6021
25G10	6022
25G10R	6023
25G20	6026
25G20R	6027
25G40	6034
25G40R	6035
25G60	6040
25G80	6042
25G100	6044
25GC12	5990
25H2	123AP
25H5	6050
25H5A	6050
25H10	6050
25H10A	6050
25H15	6054
25H15A	6054
25H20A	6054
25H25	6058
25H25A	6058
25H30	6058
25H30A	6058
25H40	6060
25H40A	6060
25H50	6064
25H50A	6064
25H60	6064
25H60A	6064
25H70	6068
25H70A	6068
25H80	6068
25H80A	6068
25H90	6072
25H90A	6072
25H100	6072
25H100A	6072
25HB5	6020
25HB10	6022
25HB15	6026
25HB20	6026
25HB25	6030
25HB30	6030
25HB35	6034
25HB40	6034
25HB50	6038
25HB60	6040
25J2	177
25JB1L	5322
25JB2L	5322
25JB4L	5324
25JC12	5994
25K10	125
25LC12	5998
25MQ20	6094
25MQ25	6094
25MQ30	6094
25N15	145A
25N27	146A
25NC12	6002
25PCRA	5517
25PCRB	5517
25PCRC	5517
25PCRD	5517
25PCRE	5517
25PCRF	5518
25PCRG	5518
25PCRH	5518
25PCRI	5519
25PCRJ	5519
25PCRSA	5521
25PCRSB	5521
25PCRSC	5522
25PCRSD	5524
25PCRSE	5524
25PCRSF	5527
25PCRSG	5527
25PCRSH	5527
25PCRSI	5529
25PCRSJ	5529
25PCRSK	5531
25PCRSL	5531
25R	108
25SD-1N60-TMS	109
25ST-2SD781	373
25T1	102
25T-002	107
25TCRA	5521
25TCRB	5521
25TCRC	5522
25TCRD	5524
25TCRE	5524
25TCRF	5527
25TCRG	5527
25TCRI	5529
25TCRJ	5529
25Z6	142A
25Z6A	142A
25Z6AF	142A
25Z6F	142A
26-4701508	125
26/P19503	128
26D00505	116
26J2	177
26MW613	102A
26OD15901	199
26P33108	164
26R2	5994
26R2S	5994
26ST-JE9014C	123AP
26T1	102
26Z6AF	143A
26Z6F	143A
27	5009A
27-226	113A
27-C226	113A
27A10446-101-11	9099
27A10489-101-11	199
27A10533	159
27B1	5082A
27C226	113A
27D127	198
27J2	177
27P1	109
27ST-2SA673C	290A
27ST-2SD871	89
27ST-LM2682	123AP
27T401	100
27T402	100
27T403	102
27T404	102
27T405	102
27T406	121
27T407	105
27T408	101
27T409	123
27T410	103
27T411	123
27T412	126
27X(ZENER)	5033A
27Y	5033A
27Z6	144A
27Z6A	144A
27Z6AF	144A
27Z6F	144A
28-000044-01	558
28-000044-02	558
28-000046-02	5313
28-1-01	116
28-1-02	116
28-6-01	116
28-7-01	116
28-13-01	116
28-14-01	116
28-15-01	116
28-15-02	116
28-18-01	116
28-19-01	116
28-20-01	116
28-20-02	116
28-21-01	116
28-22-01	116
28-22-02	116
28-22-03	116
28-22-04	116
28-22-05	116
28-22-06	116
28-22-07	116
28-22-10	116
28-22-11	156
28-22-12	116
28-22-13	506
28-22-14	116
28-22-15	116
28-22-16	156
28-22-17	116
28-22-18	156
28-22-19(ELECTROHOME	506
28-22-20	156
28-22-21	116
28-22-22	506
28-23-01	118
28-25-01	116
28-26-01	120
28-29-01	116
28-31-00	513
28-31-01	505
28-31-02	513
28-32-00	500A
28-33-01	538
28-33-02	538
28-35-00	522
28-35-01	522
28-37-00	523
28-39-01	529
28-65-01	116
28-211K	1805
28-819-172	107

PART NUMBER	NTE REPLACEMENT
28-254566-1	116
28=ST-2SC2230AY	399
28A477	126
28A608E	106
28CPQ030	6090
28CPQ040	6090
28D836S	261
28J2	116
28M018	614
28P1	109
28R2	5998
28R25	5998
28ST-2SC1213C	289A
28ST-2SC2230AY	399
28ST-2SD467C	85
28Z6	145A
28Z6A	145A
28Z6AF	145A
28Z6F	145A
29-505	109
29-HCL	159
29A4	129
29P1	134A
29S	138A
29SZ-RD11EB2	5020A
29V008M01	100
29V0038H03	102
29V011H01	100
29V012H01	100
29V069C02	163A
29V12H01	102A
30 RECT-SI-1044	552
30-002	750
30-004-001	179
30-007-0	294
30-0069-000	56010
30-090	184
30-8054-7	116
30-8057-13	178MP
30-3015419-2	3021
30AS	116
30B	5035A
30B2	5035A
30B2(ZENER)	5035A
30B3	5035A
30B5	116
30BG11	6006
30BS	116
30C	116
30CB	116
30CTQ030	6087
30CTQ040	6087
30CTQ035	6087
30CTQ045	6087
30D1	156
30D2	125
30D4	156
30D-1	156
30DF2	580
30DF2-FC	156
30DF2-FIN	580
30DF6	580
30DG11	6006
30DL4	519
30F1	5836
30FH1S	6007
30FH2S	6007
30FQ030	6084
30FQ040	6084
30FQ035	6084
30FQ045	6084
30H	116
30H3	5874
30H3P	5856
30H3PN	5857
30HB50	5340
30HB100	5340
30HB200	5340
30HB400	5342
30HB600	5342
30J2	5874
30J3P	5876
30JH3	6058
30K	116
30M	116
30N2	5874
30N3	5874
30P1	109
30P2	5874
30P3	5874
30Q3	5946
30R1	5801
30R3	5803
30R6	5806
30R8	156
30R10	156
30R25	6002
30RECT-SI-1044	116
30RECT-SI-1020	558
30RH05S	6006
30RH1S	6006
30RH2S	6006
30S05	5800
30S1	5801
30S2	5805
30S3	5803
30S4	5804
30S5	5805
30S6	5806
30S8	5808
30S10	5809
30SB02S	6094
30SB02SA	6094
30SB03S	6094
30SB03SA	6094
30SB04S	6094
30SB04SA	6094
30SB025S	6094
30SB025SA	6094
30ST-2SC2611	157
30V-H6	102A
30V-HG	102A
30Y	5035A
31-0100	199
31-0001	160
31-0002	160
31-0003	160
31-0004	160
31-0005	126
31-0006	102A
31-0007	123AP
31-0008	102A
31-0009	123AP
31-0010	175
31-0050	107
31-0070	102A
31-0080	123AP
31-002-0	123AP
31-0012	199
31-0013	199
31-0015	160
31-0016	160
31-0017	158
31-0018	102A
31-0025	102A
31-0026	102A
31-0033	102A
31-0035	158
31-0039	109
31-0041	126
31-0042	126
31-0048	107
31-0049	107
31-0051	108
31-0052	199
31-0053	102A
31-0054	107
31-0055	193
31-0065	126
31-0066	186
31-0068	123AP
31-0069	123AP
31-0075	158
31-0081	123AP
31-0082	123AP
31-0083	128
31-0084	123AP
31-0085	123AP
31-0097	108
31-0098	107
31-0099	199
31-0101	192
31-0102	193
31-0103	108
31-0104	123AP
31-0105	158
31-0106	123AP
31-0107	102A
31-0108	126
31-0150	160
31-0170	160
31-0180	160
31-0190	126
31-0205	102A
31-0206	107
31-0230	123AP
31-0240	121
31-011	177
31-015	500A
31-025	102
31-025-0	107
31-027-0	199
31-058	123AP
31-058-0	300
31-069-0	235
31-091-3	236
31-093	177
31-0115	123AP
31-0116	123AP
31-0123	126
31-0124	126
31-0132	126
31-0134	126
31-0135	126
31-0139	126
31-0141	160
31-0148	102A
31-0153	102A
31-0161	160
31-0163	160
31-0165	160
31-0166	160
31-0168	160
31-0171	160
31-0172	102A
31-0175	127
31-0177	123AP
31-0178	126
31-0181	160
31-0182	158
31-0183	158
31-0184	126
31-0187	123
31-0188	102A
31-0189	102A
31-0191	126
31-0192	121
31-0196	121
31-0217	126
31-0228	126
31-0229	158
31-0239	123AP
31-0241	160
31-0241-1	160
31-0242	108
31-0243	108
31-0246	123AP
31-0247	102
31-0248	131MP
31-0253	100
31-1	123AP
31-1N914	519
31-1N4001	116
31-1N4002	116
31-10	107
31-16	123AP
31-194	125
31-195	116
31-1012	941M
31-2104733	160
31-21004900	160
31-21007744	160
31-21024033	160
31-21024044	160
31-21047111	160
31-21050611	160
31-21050622	160
31-22005400	102A
31-A14F	5800
31-MR750	5812
31R2	5982
31ST-2SA733Q/R	290A
31ST-2SC1923-0	229
31ST-2SC1923-0	229
31Z6	5005A
31Z6A	5005A
32-0000	109
32-0001	109
32-0002	109
32-0003	109
32-0004	109
32-0005	139A
32-0007	110MP
32-0008	109
32-0050	116
32-0060	116
32-006-0	253
32-0013	109
32-0022	177
32-0023	109
32-0025	5072A
32-0026	116
32-0029	109
32-0033	600
32-0036	109
32-0037	116
32-0038	116
32-0039	109
32-0042	116
32-0043	614
32-0044	614
32-0045	116
32-0046	116
32-0047	116
32-0048	117
32-0049	140A
32-0057	177
32-0059	116
32-0061	116
32-0062	113A
32-0063	177
32-1N756A	5016A
32-1N4764A	5096A
32-3305-4	500A
32-12066-10	160
32-13843-2	123AP
32-16591	104MP
32-16599	121MP
32-18537	109
32-18539	110MP
32-20738	123AP
32-20739	159
32-23555-1	704
32-23555-2	704
32-23555-3	704
32-23555-4	704
32-29778-1	500A
32-29778-2	500A
32-29778-3	500A
32-29778-4	500A
32-33051-5	500A
32-33057-1	500A
32-33057-2	522
32-33057-3	500A
32-33057-4	500A
32-33057-5	500A
32-33057-6	500A
32-33091-6	523
32-33091-9	523
32-33094-1	522
32-33094-2	522
32-33094-3	522
32-33094-4	522
32-33094-5	522
32-33094-6	522
32-35894-1	500A
32-35894-2	532
32-35894-3	522
32-35894-4	522
32-35894-5	500A
32-35894-6	522
32-35894-6X7	522
32-35894-7	522
32-39091-1	523
32-39091-2	523
32-39091-3	523
32-39091-4	523
32-39091-5	523
32-39091-6	523
32-39091-7	523
32-39091-8	523
32-39091-9	523
32-39704-1	522
32-39704-2	522
32-43737-1	556
32-92778-3	500A
32-107261-1	910
32-805483-1	910
32-805483-2	910
32-807071-1	911
32-807072-1	909
32-P6KE18	5025A
32AZ-HZ20-04	5029A
32E64	129
32R2	5986
32ST-HZ20-0	5029A
32SZ-HZ20-04	5029A
32SZ-HZ20-04(AU)	5029A
32SZ-HZ20-04AU	5029A
32Z6	134A
32Z6A	134A
33-0002	116
33-0006	116
33-00706A	123AP
33-0030	116
33-0023	116
33-0024	116
33-0025	138A
33-0026	116
33-0029	116
33-0031	116
33-0033	118
33-0036	506
33-0039	105
33-050	175
33-070	123AP
33-090	184
33-00234-B	175
33-00243	124
33-0706	123AP
33-00742	129
33-016	159
33-048	128
33-052	130
33-071	123AP
33-084	123AP
33-086	159
33-096	185
33-2N3906	159
33-2N-3644	159
33-2N-3906	159
33-945	568A
33-1000-00	102
33-1001-00	102
33-1002-00	131MP
33-1004-00	121
33-1009-01	102A
33-1019-00	102A
33-1020-00	102A
33-1021-00	102A
33-1390-1	HVD-12
33-1390-2	HVD-12
33-1390-3	HVD-12
33-1390-4	HVD-12
33-1390-6	HVD-12
33-1390-8	HVD-12
33-1390-10	HVD-12
33-1390-11	HVD-12
33-SJE-783	153
33-TIP-32	153
33=ST-2SC2610	399
33B	5036A
33B1	5035A
33B1(ZENER)	5036A
33B2	5036A
33B2(ZENER)	5036A
33C	5036A
33C(ZENER)	5036A
33G59019	113A
33G59024	116
33G59121	116
33G59122	116
33H50	108
33K59	312
33R	5082A
33R-09	139A
33ST-2SC710D	85
33ST-2SC2610	399
33ST-2SD478A-01	375
33ST-2SD748-01	87
33ST-2SD748A-01	87
33Y	5036A
33Y(ZENER)	5036A
33Z6	134A
33Z6A	134A
33ZR14D	2V020
34	552
34-0037-102	177
34-028-0	109
34-029-0	613
34-032-0	519
34-2N3563	108
34-2N3904	123AP
34-2N-3055	130
34-2N-3643	123A
34-2N-3904	123AP
34-2N-4401	123AP
34-2N-5190	184
34-2N-6044	263
34-6	160
34-6-16-47	159
34-34-6015-43	123AP
34-74LS109	74LS109A
34-119	160
34-143-12	159
34-194	941M
34-220	160
34-221	160
34-298	160
34-1000	130
34-1000A	130
34-1001	219
34-1002	152
34-1003	153
34-1006	157
34-1007	234
34-1008	234
34-1009	199
34-1010	123AP
34-1011	106
34-1013	159
34-1014	123AP
34-1017	194
34-1019	199
34-1022	159
34-1026	175
34-1027	218
34-1028	130
34-1028A	130
34-1029	219
34-1041	726
34-2001-1	109
34-3015-28	159
34-3015-46	107
34-3015-47	107
34-3015-49	107
34-3022-7	109
34-5080-0021	109
34-5081-0017	519
34-5081-0035	519
34-5082-0012	116
34-5082-0059	5013A
34-5082-0077	5010A
34-5082-0086	5011A
34-5083-0027	611
34-5170-0020	107
34-5170-0011	107
34-5170-0066	107
34-5171-0016	234
34-5172-0011	123A
34-5172-0049	85
34-5182-0016	116
34-5261-0015	298
34-5262-0011	85
34-6000-3	160
34-6000-4	102A
34-6000-5	102A
34-6000-6	102A
34-6000-7	102A
34-6000-8	102A
34-6000-9	160
34-6000-10	160
34-6000-11	160
34-6000-12	160
34-6000-13	160
34-6000-14	160
34-6000-15	102A
34-6000-16	160
34-6000-17	160
34-6000-18	160
34-6000-19	160
34-6000-20	160
34-6000-25	160
34-6000-26	160
34-6000-27	102A
34-6000-28	102A
34-6000-29	102A
34-6000-30	102A
34-6000-31	102A
34-6000-32	102A
34-6000-33	102A
34-6000-34	102A
34-6000-58	160
34-6000-59	160
34-6000-60	160
34-6000-61	160
34-6000-62	160
34-6000-63	160
34-6000-64	123AP
34-6000-65	160
34-6000-66	160
34-6000-67	160
34-6000-68	160
34-6000-69	123AP
34-6000-70	123AP
34-6000-71	123AP
34-6000-72	233
34-6000-76	160
34-6000-77	160
34-6000-78	160
34-6000-79	160
34-6000-80	160
34-6000-81	160
34-6000-82	160
34-6000-83	102A
34-6000-84	102A
34-6000-85	102A
34-6001-1	104
34-6001-3	108
34-6001-5	123AP
34-6001-6	108
34-6001-7	102A
34-6001-8	102A
34-6001-9	102A
34-6001-10	102A
34-6001-11	102A
34-6001-12	102A
34-6001-13	102A
34-6001-14	102A
34-6001-15	159
34-6001-16	102A
34-6001-17	102A
34-6001-18	102A
34-6001-19	102A
34-6001-20	102A
34-6001-21	102A
34-6001-22	102A
34-6001-23	102A
34-6001-26	102A
34-6001-28	158
34-6001-29	102A
34-6001-30	102A
34-6001-31	102A
34-6001-33	102A
34-6001-34	123AP
34-6001-41	102A
34-6001-42	102A
34-6001-43	102A
34-6001-44	102A
34-6001-47	102A
34-6001-48	123AP
34-6001-49	123AP
34-6001-50	128
34-6001-51	128
34-6001-51MR-12	128
34-6001-52	123AP
34-6001-53	123AP
34-6001-54	123AP
34-6001-55	123AP
34-6001-56	123AP
34-6001-57	123AP
34-6001-58	123AP
34-6001-60	123AP
34-6001-61	123AP
34-6001-62	123AP
34-6001-63	123AP
34-6001-64	191
34-6001-65	154
34-6001-66	158
34-6001-69	123AP
34-6001-70	123AP
34-6001-71	123
34-6001-72	102A
34-6001-73	123AP
34-6001-74	123AP
34-6001-76	102A
34-6001-77	123AP
34-6001-78	128
34-6001-79	121
34-6001-80	128
34-6001-82	128
34-6001-83	128
34-6001-84	103A
34-6001-85	128
34-6001-86	129
34-6002-1	175
34-6002-2	121
34-6002-3	121
34-6002-4	121
34-6002-5	121
34-6002-6	121
34-6002-7	121
34-6002-8	121
34-6002-9	121
34-6002-10	121
34-6002-11	121
34-6002-13	121
34-6002-14	121
34-6002-17	104
34-6002-18	104
34-6002-18A	104
34-6002-19	121
34-6002-20	104
34-6002-21	124
34-6002-22	104
34-6002-22A	104
34-6002-23	180
34-6002-24	127
34-6002-25	174
34-6002-26	124
34-6002-27	130
34-6002-28	175
34-6002-29	175
34-6002-30	127
34-6002-31	127
34-6002-32	130
34-6002-32A	130
34-6002-33	179
34-6002-34	121
34-6002-35	181
34-6002-36	180
34-6002-37	181
34-6002-38	180
34-6002-41	186
34-6002-42	187
34-6002-43	196
34-6002-45	171
34-6002-46	124
34-6002-49	127
34-6002-50	152
34-6002-52	152
34-6002-54	152
34-6002-55	123AP
34-6002-56	152
34-6002-57	153
34-6002-58	163A
34-6002-59	165
34-6002-61	162
34-6002-62	124
34-6002-63	165
34-6002-64	165
34-6005-1	160
34-6005-2	175
34-6005-3	175
34-6006-1	152
34-6007-1	123AP
34-6007-2	123AP
34-6007-3	123AP
34-6007-4	192
34-6007-5	123AP
34-6007-6	123AP
34-6007-7	123AP
34-6007-8	192
34-6007-9	123AP
34-6007-10	161
34-6007-11	161
34-6007-12	161
34-6007-13	161
34-6007-14	199
34-6008	102A
34-6009	102A
34-6010(NPN)	128
34-6010(PNP)	129
34-6015-1	123AP
34-6015-2	123AP
34-6015-3	123AP
34-6015-4	123AP
34-6015-5	123AP
34-6015-6	123AP
34-6015-7	123AP
34-6015-8	107
34-6015-9	123AP
34-6015-10	123AP
34-6015-11	123AP
34-6015-12	123AP
34-6015-13	123AP
34-6015-14	123AP
34-6015-15	319P
34-6015-15(PHILCO)	161
34-6015-16	319P
34-6015-17	319P
34-6015-18	161
34-6015-19	319P
34-6015-20	161
34-6015-21	123AP
34-6015-22	161
34-6015-23	128
34-6015-24	128
34-6015-25	128
34-6015-26	159
34-6015-27	229
34-6015-28	191
34-6015-29	319P
34-6015-30	128
34-6015-31	161
34-6015-32	160
34-6015-33	160
34-6015-34	160
34-6015-35	160
34-6015-36	160
34-6015-37	233
34-6015-38	233
34-6015-39	160
34-6015-40	160
34-6015-41	123AP
34-6015-42	159
34-6015-42A	123AP
34-6015-43	123AP
34-6015-43A	123AP
34-6015-44	123AP
34-6015-44A	102A
34-6015-46	123AP
34-6015-47	229
34-6015-48	229
34-6015-49	108
34-6015-50	107
34-6015-51	128
34-6015-52	229
34-6015-54	123AP
34-6015-59	154
34-6015-60	123AP
34-6015-61	233
34-6015-62	233
34-6015-63	123AP
34-6015-64	171
34-6015-80	123AP
34-6016-2	123AP
34-6016-3	123AP
34-6016-4	123AP
34-6016-6	123AP
34-6016-7	123AP
34-6016-8	123AP
34-6016-11	102A
34-6016-12	129
34-6016-13	187
34-6016-14	123AP
34-6016-15	159
34-6016-15A	159
34-6016-16	123AP
34-6016-17	108
34-6016-18	123AP
34-6016-19	123AP
34-6016-23	129
34-6016-23A	129
34-6016-24	123AP
34-6016-25	123AP
34-6016-26	123AP
34-6016-27	128

PART NUMBER	NTE REPLACEMENT
34-6016-28	160
34-6016-29	160
34-6016-30	128
34-6016-31	210
34-6016-32	159
34-6016-32A	129
34-6016-33	128
34-6016-41	194
34-6016-44	192
34-6016-45	152
34-6016-46	153
34-6016-47	159
34-6016-49	123AP
34-6016-49A	123AP
34-6016-50	102A
34-6016-51	192
34-6016-53	210
34-6016-54	211
34-6016-56	194
34-6016-59	193
34-6016-59(NPN)	192
34-6016-59(PNP)	193
34-6016-60	159
34-6016-63	123AP
34-6016-64	234
34-6016-65	187
34-6017-3	172A
34-6018-2	133
34-6075-46	123AP
34-8001-43	126
34-8002-1	109
34-8002-2	109
34-8002-3	109
34-8002-4	109
34-8002-5	109
34-8002-6	109
34-8002-7	109
34-8003	116
34-8022	109
34-8022-1	109
34-8022-2	109
34-8022-3	109
34-8022-4	109
34-8022-5	109
34-8022-6	109
34-8022-6(PHILCO)	110MP
34-8022-7	109
34-8022-77	109
34-8024-24	506
34-8024-25	506
34-8026-1	116
34-8026-2	116
34-8026-3	116
34-8026-4	116
34-8027	112
34-8034	113A
34-8034-1	116
34-8034-2	116
34-8034-3	116
34-8034-4	116
34-8034-7	113A
34-8036-1	116
34-8036-2	116
34-8036-3	116
34-8036-4	116
34-8037	113A
34-8037-1	113A
34-8037-2	113A
34-8037-3	113A
34-8037-4	113A
34-8040-2	116
34-8042-1	116
34-8042-2	116
34-8042-3	116
34-8047-1	178MP
34-8047-2	116
34-8048-1	116
34-8048-2	116
34-8048-3	116
34-8048-4	116
34-8048-5	116
34-8050-1	116
34-8050-2	116
34-8050-5	116
34-8050-6	116
34-8050-7	116
34-8050-8	116
34-8050-9	116
34-8050-10	125
34-8050-14	116
34-8051	116
34-8053-2	118
34-8053-3	118
34-8053-4	118
34-8053-7	118
34-8054-1	116
34-8054-2	116
34-8054-3	116
34-8054-4	116
34-8054-5	116
34-8054-6	116
34-8054-6(PHILCO)	136A
34-8054-7	116
34-8054-8	506
34-8054-9	116
34-8054-10	116
34-8054-11	116
34-8054-12	116
34-8054-13	116
34-8054-14	116
34-8054-15	116
34-8054-16	507
34-8054-18	116
34-8054-23	116
34-8054-24	506
34-8054-25	506
34-8054-27	116
34-8055-2	116
34-8055-2#	116
34-8055-3	116
34-8056-13(PHILCO)	178MP
34-8057-1	614
34-8057-3	110MP
34-8057-4	5076A
34-8057-5	177
34-8057-6	177
34-8057-7	135A
34-8057-8	178MP
34-8057-9	138A
34-8057-9(PHILCO)	139A
34-8057-10	5071A
34-8057-11	116
34-8057-12	145A
34-8057-13	177
34-8057-14	142A
34-8057-16	138A
34-8057-18	116
34-8057-19	614
34-8057-22	506
34-8057-23	109
34-8057-24	506
34-8057-25	109
34-8057-26	109
34-8057-27	138A
34-8057-27(PHILCO)	139A
34-8057-28	116
34-8057-29	109
34-8057-30	109
34-8057-31	5080A
34-8057-32	136A
34-8057-33	142A
34-8057-34	178MP
34-8057-37	135A
34-8057-38	147A
34-8057-39	506
34-8057-40	177
34-8057-41	142A
34-8057-42	5014A
34-8057-43	5027A
34-8057-44	5029A
34-8057-45	116
34-8057-46	5144A
34-8057-47	5133A
34-8057-49	5014A
34-8057-52	109
34-8057-53	142A
34-8057-55	5007A
34-8057-56	5074A
34-8058	120
34-8058-1	120
34-8058-2	120
34-8058-7	120
34-8059-1	230
34-8059-2	231
34-8059-6	5457
34-8059-7	5457
34-8062-1	504
34-8062-4	504
34-9037-1	113A
34-9037-2	178MP
34-60001-63	123AP
34-601703	172A
34-MPS-A06	287
34-MPS-A42	287
34-MPS-A92	288
34E3L	108
34E31	108
34G3098-2	5871
34GA	5851
34H31	108
34ID	5854
34M14Z	144A
34M14Z5	144A
34M14Z10	144A
34P1AA	159
34P4	177
34R2	5990
34ST-2N6558	171
34ST-MPS9418	123AP
34ST-MPS9418AT	123AP
34SZ-UZ-12B	5021A
34SZ-UZ12B	5021A
34Z14D5	144A
34Z14D10	144A
34Z140	144A
35	552
35(RCA)	159
35(ZENER)	5037A
35-003-001	116
35-010-04	519
35-020-21	128
35-013-0	611
35-1000	125
35-1003	125
35-1004	116
35-1005	116
35-1006	5892
35-1008	5802
35-1014	177
35-1029	125
35-210631-01	5635
35-210631-02	5635
35-39306001	123AP
35-39306002	123AP
35-39306003	123AP
35-ALD	159
35-MCR106-1	5411
35B611	167
35BL611	167
35C	5037A
35C05	5980
35C05R	5981
35C10	5982
35C10R	5982
35C15	5986
35C15R	5987
35C20	5986
35C20R	5987
35C30	5988
35C30R	5989
35C40	5990
35C40R	5991
35C50	5992
35C50R	5993
35C60	5994
35C60R	5995
35C70	5998
35C70(RECT)	5998
35C70R	5999
35C80	5998
35C80R	5999
35C90	6002
35C90R	6003
35C100	6002
35C100R	6003
35H5	5980
35H10	5982
35H10R	5983
35H20	5986
35H30	5988
35H40	5990
35HR20	5987
35HR30	5987
35HR40	5991
35MB05A	5340
35MB10A	5340
35MB20A	5340
35MB40A	5342
35MB60A	5342
35MB80A	5344
35MB100A	5344
35P1	102
35P2	102
35P2C	102
35P4	177
35SI-UPC574J	615P
35T1	102
35Z6	5009A
35Z6A	5009A
36(SEARS)	160
36-0041	1142
36-0083	1140
36-1	107
36-6015-46	107
36-6016-59	193
36-6343	142A
36B3(ZENER)	5037A
36D32	177
36D-32	177
36E004-1	109
36GRA	5851
36J003-1	102A
36P1	102
36P1C	102
36P1F	102
36P2F	102
36P3	102
36P3A	102
36P3C	102
36P4	102
36P4C	102
36P5	102
36P5C	102
36P6C	102A
36P7	102A
36P7C	102A
36P7T	102A
36P8	102A
36P8C	102A
36R2	5994
36R2S	5994
36SI-CA3065E	712
36ST-2SB757C	55
36T1	102
36Z6	135A
36Z6A	135A
37-74H04	74H04
37-74LS00	74LS00
37-74LS02	74LS02
37-74LS04	74LS04
37-74LS08	74LS08
37-74LS10	74LS10
37-74LS11	74LS11
37-74LS14	74LS14
37-74LS20	74LS20
37-74LS27	74LS27
37-74LS32	74LS32
37-74LS42	74LS42
37-74LS74	74LS74A
37-74LS83	74LS83A
37-74LS86	74LS86
37-74LS90	74LS90
37-74LS107	74LS107
37-74LS139	74LS139
37-74LS153	74LS153
37-74LS157	74LS157
37-74LS161	74LS161A
37-74LS163A	74LS163A
37-74LS164	74LS164
37-74LS170	74LS170
37-74LS174	74LS174
37-74LS175	74LS175
37-74LS191	74LS191
37-74LS193	74LS193
37-74LS194	74LS194
37-74LS195	74LS195A
37-74LS244	74LS244
37-74LS245	74LS245
37-74LS251	74LS251
37-74LS253	74LS253
37-74LS257	74LS257
37-74LS259	74LS259
37-74LS273	74LS273
37-74LS367	74LS367
37-74LS373	74LS373
37-74LS374	74LS374
37-74LS393	74LS393
37-74LS670	74LS670
37-74S00	74S00
37-74S02	74S02
37-74S04	74S04
37-74S08	74S08
37-74S74	74S74
37-74S157	74S157
37-74S260	74S260
37-78L05	977
37-193MP	199
37-210	5697
37-309K	309K
37-555	955M
37-556	978
37-566	994M
37-4011	4011B
37-4016	4016B
37-4066	4066B
37-4514B	4514B
37-7400	7400
37-7402	7402
37-7404	7404
37-7406	7406
37-7407	7407
37-7408	7408
37-7410	7410
37-7411	7411
37-7413	7413
37-7414	7414
37-7417	7417
37-7420	7420
37-7425	7425
37-7427	7427
37-7430	7430
37-7432	7432
37-7442	7442
37-7448	7448
37-7450	7450
37-7474	7474
37-7475	7475
37-7483	7483
37-7485	7485
37-7486	7486
37-7490	7490
37-7492	7492
37-7493	7493A
37-7497	7497
37-7805	960
37-7812	966
37-7905	961
37-7912	967
37-7915	969
37-9314	8314
37-9316	74161
37-9321	8321
37-9602	9602
37-14011	4011B
37-14514B	4514B
37-14584B	4584B
37-19201	234
37-21401	199
37-74107	74107
37-74109	74109
37-74125	74125
37-74151	74151
37-74153	74153
37-74157	74157
37-74160	74160
37-74161	74161
37-74163	74163
37-74164	74164
37-74165	74165
37-74174	74174
37-74175	74175
37-74191	74191
37-74192	74192
37-74193	74193
37-LM311	922
37-LM323K	931
37-LM324	987
37-LM339	834
37-LM340T15	968
37-MC3340	829
37-MC14028	4028B
37-MC14050	4050B
37-RC4136	997
37-TL082CP	858M
37H01	5192A
37H02	5200A
37H03	5232A
37H04	5174AK
37H05	5175AK
37H06	5188A
37H07	5224A
37H08	5186A
37H09	5229A
37RA80	5579
37RA100	5579
37RA120	5579
37RC80A	5579
37RC100A	5579
37RC110A	5579
37RC120A	5579
37SZ-BZ-120	142A
37SZ-RD10EB	5019A
37T1	126
37Z6	136A
37Z6A	136A
38	116
38-8057-6	519
38=ST-2SA10150(AP)	290A
38A64C	138A
38A5576-000	5314
38A5577-000	188
38A5578-000	189
38A-64C	138A
38P1	121
38P1C	121
38R2	5998
38R2S	5998
38ST-2SA10150(AP)	290A
38ST-2SA10150AP	290A
38ST-2SA10150(AP)	290A
38ST-2SA10150AP	290A
38ST-2SC1855	229
38ST-2SC10150	290A
38ST-2SC10150(AP)	290A
38T1	102
38Z6	137A
38Z6A	137A
39(SHARP)	142A
39-02	116
39-033-0	988
39-033-2	988
39-047-1	829
39-059-0	1214
39-061-0	1192
39-077-0	834
39-13	142A
39A9	102
39A69-2	177
39B2	5068A
39P1	121
39P1C	121
39P2C	100
39PC1	104
39R-26	146A
39RECT-SI-1006	552
39SD-1N4148	519
39ST-2SD820	165
39ST-2SD898B	89
39SZ-RD12FB	142A
39T1	102
39Z6	5014A
39Z6A	5014A
39ZR07D	1V025
40-0068-2	128
40-0502	117
40-035-0	4011B
40-065-19-012	74H40
40-065-19-008	9933
40-065-19-001	9961
40-065-19-002	9963
40-065-19-029	7486
40-065-19-003	9949
40-065-19-004	9937
40-065-19-014	9097
40-065-19-005	9944
40-065-19-007	9948
40-065-19-013	9946
40-065-19-016	7440
40-065-19-006	9932
40-065-19-030	7495
40-065-19-027	7475
40-09297	519
40-09437	234
40-09952	234
40-601	102
40-11253	234
40-102430	124
40A50	5980
40A100	5982
40A150	5986
40A200	5986
40A300	5988
40A400	5990
40A500	5992
40A600	5994
40AS	116
40B5	116
40BS	116
40C	116
40C050	5567
40C050B	5567
40C025B	5567
40C2PW8V1SP	106
40C10	5567
40C10B	5567
40C15	5567
40C15B	5567
40C20	5567
40C20B	5567
40C25	5568
40C25B	5568
40C30	5568
40C30B	5568
40C35	5568
40C35B	5568
40C40	5568
40C40B	5568
40C45	5568
40C45B	5568
40C50	5568
40C50B	5568
40C60	5568
40C60B	5568
40C70	5569
40C70B	5569
40C80	5569
40C80B	5569
40C90	5569
40C90B	5569
40C100	5569
40C100B	5569
40C110B	5569
40C120	5569
40C120B	5569
40D1547	160
40D6665A03	116
40H	116
40H3	5874
40H3P	5858
40H3PN	5859
40HF5	5980
40HF10	5982
40HF15	5986
40HF20	5986
40HF30	5988
40HF40	5990
40HF50	5994
40HF60	5994
40HF70	5998
40HF80	5998
40HF90	6002
40HF100	6002
40HFL5S02	6006
40HFL10S02	6006
40HFL10S05	6006
40HFL20S02	6006
40HFL20S05	6006
40HFL40S02	6008
40HFL40S05	6008
40HFL60	6010
40HFL60S	6010
40HFL60S02	6010
40HFL60S05	6010
40HFR5	5981
40HFR10	5983
40HFR15	5987
40HFR20	5987
40HFR30	5989
40HFR40	5991
40HFR50	5993
40HFR60	5995
40HFR70	5999
40HFR80	5999
40HFR90	6003
40HFR100	6003
40J2	116
40J3P	5878
40JH3	6060
40JH3R	6061
40JZ	116
40K	116
40KR	116
40M	116
40MQ20	6094
40MQ25	6094
40MQ30	6094
40MQ40	6094
40N1	116
40N2	5874
40N3	5874
40NJ	116
40P1	102
40P2	102
40P2(POWER)	5874
40P2RECT	5874
40P3	5874
40Q3	5900
40Q4	5900
40R2S	6002
40R3	5900
40RCS5	5567
40RCS10	5567
40RCS20	5567
40RCS30	5568
40RCS40	5568
40RCS50	5568
40RCS60	5568
40RCS70	5569
40RCS80	5569
40RCS90	5569
40RCS100	5569
40RCS110	5569
40RCS120	5569
40RECT-S1-1002	552
40S3	5900
40S5	5838
40SB02S	6094
40SB02SA	6094
40SB03S	6094
40SB03SA	6094
40SB04S	6094
40SB04SA	6094
40SI-MC1364P	783
40ST-2SC2371L	157
40Y3P	116
41 SI-HA1128	712
41-0500	129
41-0500A	129
41-001	120
41-0606	198
41-0609	198
41-0905	142A
41-0906	5066A
41-0909	175
41-032	116
41-0318	130
41-0318A	130
41-0499	123AP
41-J2	116
41B581014	128
41B581144-P001	175
41C-407	1003
41E3-1	109
41HFR90	6003
41J2	116
41M-19	107
41N	161
41N1	108
41N2	108
41N2A	108
41N2AA	108
41N2B	108
41N2M	108
41N3	108
41S1-HA1128	712
41SI-HA1128	712
41SI-LM3065N	712
41Z6	5016A
41Z6A	5016A
42-0094-399	126
42-051	125
42-7	116
42-9029-31B	199
42-9029-31L	199
42-9029-31M	123AP
42-9029-31P	199
42-9029-31Q	199
42-9029-31R	123AP
42-9029-31V	123AP
42-9029-40C	123AP
42-9029-40F	234
42-9029-40L	123AP
42-9029-40T	128
42-9029-40U	129
42-9029-40W	234
42-9029-40X	159
42-9029-40Y	123AP
42-9029-60A	123AP
42-9029-60B	234
42-9029-60C	123AP
42-9029-60D	199
42-9029-60Q	159
42-9029-60W	129
42-9029-70C	123AP
42-9029-70D	159
42-9029-70E	159
42-9029-70F	123AP
42-9029-70G	129
42-9029-70J	128
42-9029-70K	128
42-9029-70P	123AP
42-9029-70Q	234
42-14027	116
42-16599	121
42-17143	102
42-17443	116
42-17443A	116
42-17444	123
42-18109	176
42-18111	123
42-18310	124
42-19642	128
42-19643	129
42-19644	123
42-19645	125
42-19670	123
42-19671	102A
42-19681	110MP
42-19682	160
42-19683	108
42-19792	160
42-19840	123AP
42-19862	103A
42-19862A	158
42-19863	102A
42-19863A	102A
42-19864	102A
42-19864A	102A
42-19865	116
42-19917	143A
42-20222	102A
42-20738	123
42-20739	129
42-20960	175
42-20961	130
42-20961A	130
42-21232	129
42-21233	128
42-21234	123AP
42-21362	110MP
42-21400	116
42-21401	161
42-21402	161
42-21403	126
42-21404	103A
42-21405	158
42-21406	102A
42-21407	123
42-21408	116
42-21443	121MP
42-21866	116
42-22008	159
42-22008A	159
42-22009	172A
42-22154	192
42-22158	123AP
42-22532	107
42-22533	123AP

PART NUMBER	NTE REPLACEMENT
42-22534	102A
42-22535	158
42-22535Q	102
42-22536	614
42-22537	109
42-22538	177
42-22539	109
42-22539(DIODE)	109
42-22539(TRANS)	106
42-22755	109
42-22778	160
42-22779	160
42-22780	160
42-22781	160
42-22784	160
42-22785	108
42-22786	123AP
42-22787	123AP
42-22809	123AP
42-22810	159
42-22810A	159
42-22811	123AP
42-22812	123AP
42-22834	121MP
42-22835	116
42-22847	123AP
42-23348	123AP
42-23349	123AP
42-23350	116
42-23350A	116
42-23459	152
42-23541	159
42-23541A	159
42-23542	123AP
42-23622	102A
42-23960	107
42-23960P	107
42-23961	107
42-23961P	107
42-23962	107
42-23962P	107
42-23963	107
42-23963P	107
42-23964	123AP
42-23964P	123AP
42-23965	126
42-23965P	160
42-23966	123AP
42-23966P	123AP
42-23967	158
42-23967P	158
42-23968	121
42-23968P	121
42-23969	109
42-23970	614
42-23972	110MP
42-23975	116
42-23977	5809
42-24263	172A
42-24387	177
42-27202	116
42-27277	199
42-27278	116
42-27372	161
42-27373	161
42-27374	123AP
42-27375	123AP
42-27376	102
42-27378	109
42-27379	614
42-27380	109
42-27381	109
42-27463	116
42-27529	229
42-27530	229
42-27533	199
42-27534	199
42-27535	199
42-27536	159
42-27537	289
42-27538	153
42-27539	152
42-27540	611
42-27541	142A
42-27542	601
42-27543	109
42-27544	110MP
42-28056	123AP
42-28057	158
42-28058	116
42-28199	109
42-28200	614
42-28201	177
42-28202	116
42-28203	108
42-28204	108
42-28205	123AP
42-28206	108
42-28207	123AP
42-28208	159
42-28210	123AP
42-28211	159
42-28212	184
42-28213	185
42-30092	199
42-Z6A	139A
42=ST-2SC930E	107
42A11	116
42A14	109
42A23	116
42B2	116
42B16	116
42J2	116
42OT1	158
42P1	100
42R2	5874
42ST-2SC930E	107
42ST-2SD666C	382
42X25	116
42X32	116
42X210	103
42X230	102A
42X233	102
42X244	116
42X244B	116
42X245	116
42X245B	116
42X308	102
42X309	102
42X310	103
42X311	102
42Z6	139A
43-0203845	129
43-022861	108
43-023190	181
43-023212	123AP
43-023221	123AP
43-023222	129
43-023223	128
43-023843	130
43-023844	128
43-025763	108
43-025764	108
43-025765	108
43-025766	123AP
43-025767	108
43-025834	131
43-540012	116
43-VD-09	128
43A111449	160
43A113534	177
43A114346-1	519
43A114346-P1	519
43A114832-3	519
43A126932	128
43A128340-1	123AP
43A128340-2	123AP
43A128340-3	123AP
43A128340-4	123AP
43A128342-1	123AP
43A128342-2	123AP
43A128342-3	123AP
43A128342-4	123AP
43A128342-5	123AP
43A128342-6	123AP
43A128342-7	123AP
43A144188-5	5675
43A145291-1	159
43A145291-2	159
43A162445P1	199
43A162455-1	128
43A165137P1	130
43A165137P3	130
43A165137P4	130
43A167207P1	159
43A167207P2	159
43A167229-01	177
43A167851	123AP
43A167885-P1	181
43A167885-P2	181
43A167885-P3	181
43A167886P4	218
43A168016P1	123AP
43A168064-1	159
43A168064P1	159
43A168135-1	9932
43A168135-2	9930
43A168135-3	9933
43A168135-4	9946
43A168135-6	9936
43A168135-7	9944
43A168135-8	9945
43A168135-9	9093
43A168135-10	9962
43A168440	912
43A168440-1	912
43A168481	941D
43A168481P1	941D
43A175989P1	519
43A176002	159
43A180002-P1	123AP
43A180002-P2	123AP
43A212040-1	909
43A212040-2	909D
43A212042-P2	910D
43A212042P1	910
43A212042P2	910D
43A212067	130
43A212090P1	199
43A223006P1	74H00
43A223007	7401
43A223008	74H01
43A223009	7402
43A223012	74H10
43A223015	7430
43A223017	74H40
43A223018	74H40
43A223025	7473
43A223026P1	7474
43A223028	7476
43A223029P1	7442
43A223030	7495
43A223031	7496
43A223033P1	7483
43A223034P1	7493A
43A223046-1	923
43A223060-1	128
43B140883-1	123AP
43B168450-1	159
43B168495-1	159
43B168566-P1	159
43B168610	123AP
43B168613-1	199
43C168567	123AP
43C216408P1	74H00
43C216409P1	74H01
43C216410P1	74H04
43C216411P1	74H20
43C216414P1	74H51
43C216447	74193
43C216447P1	74193
43N3	123
43N6	123
43P1	100
43P2	102
43P3	100
43P4	102
43P4C	102
43P6	102
43P6A	102
43P6C	100
43P7	102
43P7A	102
43P7C	102
43ST-2SC535B	107
43ST-2SC1514-05	376
43SZ-RD6.2E	5013A
43SZ-YZ-063	5013A
43SZ-YZ063	5013A
43X16A567	123
43Z6	140A
43Z6A	140A
44-13	126
44-530	116
44-10143-01	7406
44-10146-01	960
44-10551-01	955M
44-10672-01	960
44-10673-01	968
44-10674-01	969
44-10675-01	74265
44-10682-01	74LS27
44-10684-01	74LS75
44-10685-01	74LS85
44-10686-01	74LS86
44-10687-01	74LS107
44-10688-01	74LS151
44-10691-01	74LS164
44-10692-01	74LS194
44-10693-01	74LS257
44-10694-01	74LS259
44-10695-01	74LS298
44-10696-01	74LS377
44-10698-01	74S00
44-10699-01	74S02
44-10701-01	74S08
44-10702-01	74S10
44-10704-01	74S113
44-10705-01	74S158
44-10706-01	74S182
44-10713-01	902
44-10716-01	955M
44-10718-01	857M
44-10913-01	994M
44-10952-01	7404
44-44886G01	289
44A41736	5149A
44A41779-001	941M
44A319819-1	128
44A332168-001	941
44A332168-002	941
44A332169-002	941
44A333413	923
44A333463-001	123AP
44A333464	159
44A333464-1	159
44A335854-001	912
44A353980-002	175
44A354637-001	175
44A355565-001	130
44A358624-003	129
44A359497-001	128
44A359497-002	128
44A390202-001	909
44A390202-003	909
44A390243-001	175
44A390244-001	130
44A390247	123AP
44A390248-001	159
44A390249	123AP
44A390251	123AP
44A390251-001	123AP
44A390256-001	159
44A390261	159
44A390264-001	128
44A391505	129
44A391593-001	181
44A393605	941D
44A393611	923D
44A393611-001	923D
44A395909-1	181
44A395986-001	152
44A395992-001	128
44A395992-002	128
44A395994-001	123AP
44A397905	159
44A417031-001	159
44A417032-001	152
44A417033-001	130
44A417034	192
44A417063-001	128
44A417716	130
44A417716-001	130
44A417756-1	197
44A417779-001	941M
44A418041-001	159
44A4417714	181
44A4417714-001	181
44A355565001	130
44A-1A5	121
44A-417014-001	181
44B1	738
44B1B	738
44B1Z	738
44B238203-1	159
44B238208-001	175
44B238208-002	175
44B238246	159
44B311097	123AP
44B238208002	175
44L	123AP
44P1	160
44R2	5858
44R2R	5859
44SD-CDG00	177
44ST-2SB568C	398
44ST-2SB649AC	374
44SZ-WZ-063	5013A
44T-100-120	1155
44T-300-91	614
44T-300-92	136A
44T-300-93	140A
44T-300-94	138A
44T-300-95	116
44T-300-96	177
44T-300-97	109
44T-300-99	1104
44T-300-100	981
44T-300-102	1155
44T-300-103	123AP
44T-300-104	229
44T-300-105	312
44T-300-106	199
44T-300-107	295
44T-300-108	295
44T-300-109	235
44T-300-110	229
44T-300-111	199
44T-300-112	199
44T-300-113	312
45A2FX355	116
45AN4AA	123AP
45N1	103
45N2	103
45N2A	103A
45N2M	123AP
45N3	123AP
45N4	123AP
45N4M	123AP
45NP	108
45ST-2SC454C	85
45ST-2SC1106	94
45X1A502C	102
45X1A520C	102A
45X2	100
46-00000-0	145A
46-06311-3	107
46-4	112
46-29-6	712
46-34-3	116
46-36-3	116
46-67-3	116
46-86-3	116
46-86-937-3	123AP
46-119-3	161
46-163-3	102A
46-530-3	5143A
46-840-3	102A
46-861-3	112
46-862	112
46-862-3	160
46-864-3	108
46-865-3	160
46-865-7-3	552
46-866-3	160
46-867-3	399
46-868-3	160
46-869-3	102A
46-1340-3	711
46-1343-3	1003
46-1346-3	711
46-1357-3	1004
46-1361-3	712
46-1365-3	749
46-1369-3	1004
46-1382-3	1108
46-1384-3	712
46-1393-3	1130
46-1396-3	1128
46-5002-1	703
46-5002-2	703
46-5002-3	703
46-5002-4	703
46-5002-6	711
46-5002-7	703
46-5002-12	714
46-5002-15	712
46-5002-16	780
46-5002-17	746
46-5002-18	747
46-5002-20	923D
46-5002-23	740A
46-5002-26	712
46-5002-28	749
46-5002-31	1062
46-5002-33	731
46-5290-0042	1465
46-5291-0164	2060
46-6661-2	117
46-6829	107
46-8257-3	123AP
46-8477-3	199
46-8601-3	116
46-8610-3	102A
46-8611	102A
46-8611-3	102A
46-8611-4	116
46-8612-3	160
46-8613	112
46-8613-3	126
46-8613-3(HOR-OUT)	127
46-8613-3(SYNC)	160
46-8614	112
46-8614-3	101
46-8615-3	121
46-8616-3	110MP
46-8617-3	121
46-8619	116
46-8619-3	109
46-8620-3	506
46-8621-3	166
46-8622	112
46-8623	109
46-8623-3	109
46-8624-3	123AP
46-8625	112
46-8625-1	126
46-8625-2	126
46-8625-3	126
46-8625-4	126
46-8625-5	126
46-8625-6	126
46-8627	112
46-8629	107
46-8630	109
46-8631-3	102A
46-8634-3	121
46-8636-3	126
46-8638	312
46-8638-3	121
46-8638P-3	128
46-8642	614
46-8643	112
46-8643-3	112
46-8644	614
46-8644-3	109
46-8646	222
46-8646-3	109
46-8647	107
46-8647-3	116
46-8648	312
46-8649	312
46-8650	107
46-8651	123AP
46-8652	107
46-8653	107
46-8654	107
46-8656	123AP
46-8660-3	102A
46-8661	116
46-8661-3	116
46-8663-3	112
46-8664-3	102A
46-8665-3	102A
46-8666-3	102A
46-8668-3	102A
46-8669-3	290
46-8671-3	103A
46-8672-3	161
46-8676-3	177
46-8677-2	108
46-8677-3	152
46-8679-1	102A
46-8679-2	102A
46-8679-3	159
46-8680-1	102A
46-8680-2	102A
46-8680-3	102A
46-8681-1	102A
46-8681-2	102A
46-8681-3	158
46-8682-2	123AP
46-8682-3	199
46-8687-3	116
46-8688-3	112
46-8689-3	116
46-8694-3	115
46-8695-3	123AP
46-8697-3	116
46-13101-3	1080
46-13103-3	1094
46-13104-3	1121
46-13105-3	1122
46-13121-3	712
46-13124-3	738
46-13131-3	1009
46-13145-3	712
46-13152-3	1470
46-13172-3	1263
46-13173-3	1087
46-13180-3	1216
46-13185-3	1187
46-13188-3	1545
46-13190-3	1496
46-13199-3	4069
46-13208-3	1430
46-13223-3	1245
46-13225-3	1556
46-13226-3	966
46-13229-3	1582
46-13258-3	4011B
46-13272-3	4001B
46-13279-3	928M
46-13296-3	4066B
46-13297-3	928M
46-13302-3	1483
46-13307-3	2077
46-13311-3	968
46-13312-3	1414
46-13313-3	4013B
46-13314-3	4040B
46-13315-3	4013B
46-13316-3	4082B
46-13317-3	4001B
46-13319-3	4069
46-13322-3	1466
46-13324-3	977
46-13339-3	1556
46-13340-3	712
46-13356-3	1547
46-13379-3	1483
46-13404-3	778A
46-13455-3	74LS123
46-13484-3	1558
46-13487-3	4028B
46-13491-3	4520B
46-13495-3	943M
46-13502-3	2076
46-13527-3	1538
46-13538-3	1471
46-13547-3	1656
46-13548-3	1673
46-13561-3	1236
46-13581-3	1658
46-13588-3	1548
46-13588-9	1548
46-13590-3	1576
46-13593-3	74LS74A
46-13604	1673
46-13604-3	1673
46-13645-3	1657
46-13662-3	4053B
46-13678-3	4053B
46-13686-3	1781
46-13689-3	1716
46-13704-3	1538
46-13730-3	4052B
46-13816-3	4071B
46-13829-3	15003
46-13830-3	1674
46-13911-3	15021
46-13912-3	1656
46-13921-3	1780
46-13922-3	1373
46-13925-3	40174B
46-13938-3	1673
46-13963-3	1673
46-13969-3	1685
46-16261	116
46-16261-3	116
46-24850-3	552
46-37328-3	2302
46-41763C01	5072A
46-56505-3	157
46-56648-3	287
46-61249-3	116
46-61267-3	177
46-61307-3	177
46-61951-3	605A
46-61961-3	605A
46-67120A13	116
46-80309-3	177
46-80647-3	287
46-81148-3	290A
46-81187-3	171
46-84120-3	108
46-85285-3	108
46-86101-3	107
46-86102-3	126
46-86104-3	174
46-86106-3	506
46-86107-3	161
46-86108-3	161
46-86109-3	107
46-86110-3	107
46-86112-2	161
46-86112-3	319P
46-86113-3	161
46-86114-3	382
46-86115-3	103A
46-86116-3	5015A
46-86117-3	161
46-86118-3	161
46-86119-3	161
46-86120-3	107
46-86121-3	123AP
46-86122-3	123AP
46-86123-3	160
46-86125-3	131
46-86126-3	107
46-86127-3	107
46-86130-3	175
46-86131-3	233
46-86132-3	289
46-86133-3	107
46-86134-3	112
46-86135-3	131
46-86136-3	121
46-86139-3	116
46-86140-3	108
46-86141-3	125
46-86143-3	123AP
46-86144-3	123AP
46-86145-3	123AP
46-86146-3	125
46-86147-3	125
46-86148	125
46-86148-3	116
46-86149-3	116
46-86150-3	117
46-86151-3	117
46-86152-3	123AP
46-86157-3	152
46-86163-3	102A
46-86165-3	102A
46-86166-3	102
46-86168-3	177
46-86169-3	123AP
46-86170-3	159
46-86171-3	123AP
46-86172-3	107
46-86173-3	154
46-86177-3	116
46-86178-3	178MP
46-86179-3	506
46-86180-3	118
46-86182-3	154
46-86183-3	154
46-86184	177
46-86184-3	177
46-86185-3	115
46-86186-3	177
46-86187-3	177
46-86189-3	175
46-86192-3	123AP
46-86194-3	5073A
46-86195-3	102A
46-86196-3	158
46-86198-3	176
46-86199-3	116
46-86200-3	110MP
46-86201-3	116
46-86201-3(CENTERING)	507
46-86201-3(POWER)	116
46-86207-3	107
46-86208-3	108
46-86209-3	107
46-86210-3	154
46-86211-3	103A
46-86212-3	116
46-86213-3	121
46-86214-3	109
46-86220-3	113A
46-86224-3	161
46-86225-3	138A
46-86226-3	175
46-86228-3	123AP
46-86229-3	159
46-86229-3A	159
46-86230-3	159
46-86231-3	123AP
46-86232-3	154
46-86233-3	128
46-86234-3	184
46-86235-3	185
46-86238-3	159
46-86238-3A	159
46-86239-3	107
46-86240-3	229
46-86244-3	108
46-86247-2	123AP
46-86247-3	123AP
46-86249	614
46-86249-3	612
46-86250-3	177
46-86251-3	107
46-86252-3	123AP
46-86253-3	109
46-86254-3	178MP
46-86256-1	126
46-86256-2	126
46-86256-3	102A
46-86257-3	123AP
46-86261-3	116
46-86262-3	108
46-86264-3	116
46-86265-3	107
46-86266-3	109
46-86267-3	116
46-86268-3	123AP
46-86269-3	108
46-86270-3	116
46-86271-3	116
46-86274-3	123AP
46-86280-3	506
46-86281-3	506
46-86282-3	506
46-86283-3	159
46-86284-3	139A
46-86285-3	161
46-86286-3	112
46-86288-3	112
46-86289-3	614
46-86290-3	116
46-86292-3	504
46-86293-3	159
46-86294-3	504
46-86295-3	107
46-86296-3	143A
46-86299-3	107
46-86300-3	160
46-86301-3	107
46-86302-3	107
46-86303-3	177
46-86305-3	614
46-86307-3	116
46-86308-3	506
46-86309-2	519

PART NUMBER	NTE REPLACEMENT
46-86309-3	519
46-86309-3(D201)	177
46-86309-3(D202)	519
46-86309-3(TOSHIBA)	177
46-86310-3	123AP
46-86311-3	107
46-86312-3	113A
46-86313-3	503
46-86314-3	108
46-86314-3A	108
46-86315-3	128
46-86316-3	132
46-86317-3	152
46-86318-3	154
46-86319-3	157
46-86320-3	506
46-86321-3	116
46-86322-3	116
46-86323-3	140A
46-86324-3	506
46-86326-3	116
46-86327-3	171
46-86328-3	506
46-86331-3	506
46-86332-3	113A
46-86334-3	504
46-86335-3	152
46-86336-3	113A
46-86337-3	116
46-86338-3	177
46-86339-3	116
46-86341-3	144A
46-86342-3	106
46-86343-3	177
46-86344-3	171
46-86345-3	287
46-86346-3	171
46-86347-3	196
46-86348-3	152
46-86349-3	175
46-86349-9	175
46-86350-3	175
46-86351-3	116
46-86352-3	107
46-86353-3	107
46-86354-3	107
46-86355-2	116
46-86355-3	116
46-86357-3	108
46-86358-3	116
46-86360-3	186
46-86364-3	116
46-86365-3	116
46-86371-3	128
46-86373-3	102A
46-86374-3	152
46-86375-3	123AP
46-86376-3	108
46-86377-3	159
46-86378-3	123AP
46-86379-3	142A
46-86380-3	178MP
46-86381	128
46-86381-3	128
46-86382-3	506
46-86383-3	116
46-86384-3	124
46-86386-3	124
46-86387-3	124
46-86388-3	130
46-86389-3	165
46-86390-3	164
46-86391-3	506
46-86392-3	5077A
46-86393-2	506
46-86393-3	506
46-86394-3	137A
46-86394-3(10)	137A
46-86395-3	506
46-86396-3	221
46-86397-3	108
46-86398-3	192
46-86399-3	159
46-86400-3	152
46-86401-3	144A
46-86402-3	116
46-86403-3	129
46-86404-3	123AP
46-86405-3	128
46-86406-3	129
46-86407-3	123AP
46-86408-3	123AP
46-86409-3	123AP
46-86411-3	185
46-86412-3	295
46-86415-3	165
46-86416-3	116
46-86419-3	123AP
46-86420-3	116
46-86421-3	139A
46-86422-3	177
46-86424-3	159
46-86425-3	129
46-86426-3	128
46-86427-3	128
46-86428-3	177
46-86429-3	234
46-86430-3	102A
46-86431-3	177
46-86432-3	5096A
46-86433-3	116
46-86434-3	199
46-86435-3	107
46-86436-3	177
46-86437-3	116
46-86438-3	116
46-86439-3	124
46-86440-3	506
46-86442-3	5072A
46-86446-3	124
46-86446-9	124
46-86447-3	5083A
46-86451-3	504
46-86454-3	504
46-86455-3	162
46-86456-3	138A
46-86457-3	5013A
46-86458-3	5074A
46-86459-3	196
46-86460-3	5012A
46-86461-3	238
46-86461-9	238
46-86462-3	5074A
46-86463-3	116
46-86464-3	145A
46-86466-3	198
46-86467-3	5096A
46-86467-5	5096A
46-86469-3	198
46-86474-3	615P
46-86475-3	162
46-86476-3	175
46-86476-9	175
46-86477-3	165
46-86481-3	177
46-86482-3	198
46-86483-3	177
46-86483-3(ZENER)	5072A
46-86484-3	109
46-86486-3	165
46-86487-3	5074A
46-86488-3	116
46-86489-3	506
46-86492-3	238
46-86493-3	163A
46-86494	125
46-86494-3	525
46-86496-3	175
46-86497-3	116
46-86499-3	125
46-86500-3	198
46-86501-3	5013A
46-86503-3	125
46-86504-3	5020A
46-86505-3	376
46-86505-9	376
46-86506-3	198
46-86507-1	552
46-86507-3	552
46-86508-3	198
46-86509-3	552
46-86511-3	506
46-86512-3	123AP
46-86513-3	85
46-86514-3	290
46-86515-3	153
46-86516-3	152
46-86517-3	129
46-86518-3	127
46-86519-3	506
46-86520-3	503
46-86521-3	5015A
46-86522-3	162
46-86522-9	94
46-86523-3	142A
46-86525-1	506
46-86525-3	506
46-86529-3	5081A
46-86530-3	5085A
46-86531-3	233
46-86533-3	375
46-86534-3	292
46-86535-3	85
46-86535-5	233
46-86536-3	199
46-86538-3	229
46-86540-3	123AP
46-86543-3	199
46-86545-3	289A
46-86546-3	290A
46-86547-3	504
46-86550-3	293
46-86551-3	284
46-86552-3	186
46-86552-9	162
46-86553-3	125
46-86554-3	5037A
46-86556-3	198
46-86557-3	238
46-86558-3	156
46-86559-3	5012A
46-86560-3	525
46-86561-3	94
46-86562-3	125
46-86563-3	238
46-86564-3	94
46-86565-3	129
46-86566-3	5014A
46-86567-3	376
46-86568-3	175
46-86569-3	5465
46-86570-3	142A
46-86571-3	6402
46-86572-3	289A
46-86573-3	288
46-86574-3	294
46-86574-9	390
46-86577-3	5011A
46-86578-3	290
46-86579-3	85
46-86581-3	153
46-86582-3	5013A
46-86583-3	188
46-86584-3	189
46-86589-3	289A
46-86590-3	94
46-86590-9	94
46-86591-3	399
46-86610-3	125
46-86614-3	289A
46-86616-3	196
46-86618-3	552
46-86620-9	389
46-86627-3	5025A
46-86628-3	399
46-86629-3	274
46-86630-3	399
46-86635-3	107
46-86637-3	159
46-86642-3	5009A
46-86646-3	375
46-86646-9	375
46-86647-3	399
46-86648-3	399
46-86649-3	5019A
46-86654-3	5031A
46-86656-3	152
46-86660-3	199
46-86664-3	5021A
46-86666-3	5083A
46-86671-3	184
46-86672-3	459
46-86674-3	5008A
46-86677-3	5021A
46-86678-3	5036A
46-86678-3(ZENER)	147A
46-86679-2	290A
46-86679-3	290A
46-86679-3(SEARS)	294
46-86679-3(TOSH)	290A
46-86679-3(TOSHIBA)	290A
46-86679-9	290A
46-86680-3	319P
46-86680-3(SANYO/SRS)	319P
46-86681-3	89
46-86681-9	89
46-86682-2	85
46-86682-3	85
46-86683-3	5019A
46-86687-3	17
46-86700-3	293
46-86702-3	5023A
46-86709-3	5401
46-86717-3	312
46-86722-3	290A
46-86724-3	382
46-86726-3	123AP
46-86727-3	234
46-86728-3	159
46-86730-3	16
46-86734-3	125
46-86735-3	5011A
46-86739-3	116
46-86743-3	89
46-86746-3	125
46-86748-3	398
46-86749-3	288
46-86750-3	394
46-86751-3	399
46-86752-3	552
46-86753-3	89
46-86753-9	89
46-86754-3	390
46-86754-9	390
46-86756-3	90
46-86764-3	125
46-86770-3	152
46-86774-3	109
46-86774-4	109
46-86781-3	5024A
46-86792-3	331
46-86793-3	85
46-86794-3	5013A
46-86797-3	5014A
46-86804-3	382
46-86805-3	290A
46-86807-3	459
46-86811-3	85
46-86823-3	552
46-86830-3	5011T1
46-86831-3	107
46-86836-3	5019A
46-86843-3	374
46-86860-3	253
46-86862-3	199
46-86863-3	459
46-86870-3	85
46-86879-3	5008A
46-86883-3	5006A
46-86887-3	290A
46-86888-3	56
46-86889-3	293
46-86897-3	5004A
46-86906-3	312
46-86907-3	90
46-86908-3	234
46-86909-3	373
46-86910-3	185
46-86912-3	5011A
46-86914-3	140A
46-86915-3	5010T1
46-86916-3	5313
46-86917-3	116
46-86918-3	552
46-86921-3	5014A
46-86922-3	5020A
46-86923-3	37
46-86924-3	290A
46-86925-3	5014A
46-86930-3	290A
46-86931-3	5027A
46-86933-3	5013A
46-86938-3	159
46-86942-3	5014A
46-86950-3	153
46-86953-3	5018A
46-86954-3	5010A
46-86956-3	294
46-86956-3(SAN/SRS)	294
46-86962-3	186A
46-86968-3	290A
46-86969-3	2330
46-86982-3	5802
46-86993-3	298
46-86996-3	5014A
46-86997-3	5013A
46-86998-3	5010A
46-86999-3	5027A
46-88676-3	175
46-96434-3	107
46-131014-3	1569
46-131060-3	1529
46-131073-3	778A
46-131099-3	1772
46-131100-3	1782
46-131126-3	74LS86
46-131131-3	1835
46-131172-3	4052B
46-131203-3	1677
46-131206-3	1728
46-131207-3	1845
46-131208-3	1773
46-131230-3	1227
46-131237-3	1744
46-131238-3	1217
46-131240-3	5018A
46-131243	738
46-131245-3	1684
46-131262-3	966
46-131265-3	1783
46-131266-3	1791
46-131274-3	15005
46-131314-3	15022
46-131315-3	15015
46-131341-3	1797
46-131342-3	1799
46-131343-3	1798
46-131349-3	3098
46-131351-3	1743
46-131357-3	1218
46-131396-3	3092
46-131401-3	1836
46-131432-3	15035
46-131438-9	1778
46-131514-3	15007
46-131515-3	15023
46-131519-3	5018A N6
46-131585-3	1742
46-131629-3	1847
46-131656-3	1838
46-131678-3	4053B
46-131745-3	3041
46-131772-3	7004
46-131774-3	3098
46-131801-3	960
46-131969-3	1834
46-132287-3	1839
46-132305-3	1792
46-132394-3	4066B
46-132398-3	15007
46-132422-3	4053B
46-132637-3	1725
46-132638-3	1650
46-132647-3	1863
46-132648-3	1855
46-132649-3	15042
46-132850-3	960
46-132884-3	74LS156
46-132886-3	1789
46-132966-3	1855
46-133275-3	1751
46-133697-3	3041
46-136279P1	909
46-136284-P1	923
46-136284-P2	923D
46-156741P2	941D
46-203200P39	949
46-500230	799
46-611117-3	2V150
46-816043-3	399
46-836380-3	177
46-861009-3	153
46-861011-3	373
46-861012-3	374
46-861014-3	159
46-861016-3	156
46-861027-3	85
46-861031-3	398
46-861037-3	85
46-861038-3	5070A
46-861040-3	398
46-861041	125
46-861041-3	552
46-861042-3	52
46-861043-3	399
46-861045-3	5013A
46-861046-3	5018A
46-861067-3	5021A
46-861077-3	375
46-861089-3	5010A
46-861094-3	5036A
46-861096-3	459
46-861097-3	56
46-861111-3	139A
46-861113-3	5011A
46-861114-3	382
46-861116-3	5015A
46-861118-3	140A
46-861119-3	5084A
46-861135-3	5024A
46-861141-3	5035A
46-861142-3	580
46-861148-3	290A
46-861149-3	506
46-861151-3	157
46-861158-3	5019A
46-861159-3	5018A
46-861161-3	3001
46-861170-3	5018A
46-861173-3	394
46-861175-3	618
46-861176-3	5020A
46-861179-3	506
46-861186-3	5013A
46-861187-3	177
46-861208-3	552
46-861209-3	270
46-861211-3	5029A
46-861212-3	25
46-861216-3	2302
46-861222-9	243
46-861231-3	293
46-861245-3	2359
46-861253-3	2302
46-861264-3	165
46-861265-3	552
46-861266-3	5402
46-861271-3	2302
46-861272-3	157
46-861274-3	519
46-861285-3	5011A
46-861289-3	2308
46-861290-3	3060
46-861294-3	5014A
46-861299-3	290A
46-861301-3	2357
46-861304-3	125
46-861317-3	5030A
46-861327-3	2302
46-861332-3	5011A
46-861333-3	5021T1
46-861336-3	5020A
46-861340-3	5022A
46-861365-3	2355
46-861381-1	142A
46-861381-3	5022A
46-861382-3	5036A
46-861396-3	5074A
46-861397-3	5003A
46-861407-3	289A
46-861410-3	125
46-861413-3	2302
46-861422-3	2302
46-861439-3	85
46-861453-3	2302
46-861459-3	5073A
46-861463-3	31
46-861464-3	2300
46-861465-3	197
46-861466-3	5022A
46-861467-3	552
46-861475-3	2302
46-861490-3	32
46-861500-3	5009A
46-861504-3	5029A
46-861508-3	5007A
46-861545-3	10
46-861547-3	5020A
46-861551-3	5006A
46-861555-3	5015A
46-861560-3	595
46-861605-3	374
46-861606-3	373
46-861627-3	2302
46-861634-3	552
46-861646-3	5309
46-861654-3	519
46-861684-3	382
46-861699-3	5315
46-861717-3	552
46-861718-3	580
46-861720-3	5006A
46-861737-3	116
46-861738-3	5405
46-861851-3	152
46-861857-3	152
46-861861-3	5093A
46-861912-3	584
46-861924-3	5014A
46-861944-3	382
46-862045-3	5015A
46-862092-3	2311
46-862097-3	2302
46-862100-3	399
46-862112-3	580
46-862121-3	153
46-862152-3	588
46-862153-3	558
46-862167-3	506
46-862168-3	552
46-862170-3	2331
46-862289-3	123AP
46-862290-3	198
46-862291-3	376
46-862295-3	2302
46-862301-3	552
46-862322-3	580
46-862323-3	580
46-862328-3	157
46-862329-3	217
46-862350-3	5009A
46-862409-3	580
46-862410-3	5013A
46-862413-3	2308
46-862446-3	11
46-862530-3	373
46-862557-3	5047A
46-862559-3	5457
46-862582-3	2302
46-862612-3	5021A
46-862614-3	5011A
46-862615-3	5014A
46-862616-3	5010A
46-862633-3	5332
46-862634-3	5019A
46-862639-3	5016A
46-862642-3	5021A
46-862652-3	5015A
46-862653-3	5007A
46-862796-3	5035A
46-862858-3	2324
46-862994-3	580
46-864646-3	5309
46-866209	238
46-866678-3	5036A
46-866823-3	85
46=86309-3	177
46=862112-3	580
46AR1	116
46AR2	116
46AR3	116
46AR4	116
46AR5	116
46AR6	116
46AR7	116
46AR8	116
46AR9	116
46AR10	116
46AR11	116
46AR12	116
46AR13	125
46AR15	125
46AR16	125
46AR18	125
46AR21	116
46AR27	116
46AR28	116
46AR29	116
46AR35	116
46AR50	125
46AR52	125
46AR59	125
46AX1	116
46AX2	116
46AX3	116
46AX4	116
46AX5	116
46AX7	116
46AX8	116
46AX9	116
46AX10	116
46AX11	116
46AX12	125
46AX13	125
46AX14	125
46AX16	116
46AX17	116
46AX19	116
46AX21	116
46AX30	116
46AX34	116
46AX52	116
46AX54	116
46AX55	125
46AX56	125
46AX59	125
46AX70	125
46AX82	125
46AX84	125
46AX85	125
46B-3A5	121MP
46BD1	116
46BD2	116
46BD5	116
46BD8	116
46BD9	116
46BD11	116
46BD12	116
46BD14	116
46BD19	116
46BD25	116
46BD27	125
46BD30	125
46BD32	125
46BD33	125
46BD34	125
46BD38	125
46BD39	125
46BD52	125
46BD101	125
46BR5	116
46BR7	116
46BR9	116
46BR10	116
46BR11	116
46BR15	116
46BR17	116
46BR18	125
46BR21	125
46BR27	125
46BR62	125
46BR63	125
46BR64	125
46BR68	125
46BX2	116
46BX3	116
46R2	5882
46R2R	5863
46R2S	5862
46RECT-S-1002	552
46ST-MPS9700F	123AP
47-1	112
47-2	112
47-2(BRADFORD)	108
47-2(DIODE)	112
47-2(TRANS)	107
47-4	112
47-3011	219
47-3041	130
47B	5088A
47C23-3	106
47P1	121
47Z102536-P1	177
48-03005A01	177
48-03005A03	109
48-03005A05	177
48-03005A06	519
48-03005A07	116
48-03073A06	5072A
48-03073A08	5087A
48-03073A09	139A
48-03073A10	5000A
48-0104	7475
48-01	116
48-01-003	128
48-01-004	108
48-01-005	123AP
48-01-007	128
48-01-010	108
48-01-017	107
48-01-027	161
48-01-031	107
48-01-041	325
48-01-049	199
48-01-055	329
48-01-094	325
48-03-002	159
48-03-05013702	128
48-03-04046103	128
48-03-04093403	130
48-03-041840-2	130
48-03-10111102	129
48-03-10744702	192
48-03-10744802	129
48-05-001	116
48-05-011	177
48-06-001	109
48-11-005	140A
48-11-010	5041A
48-15	130
48-21-0644-012	325
48-35P1	102
48-36P1	102
48-36P3	102
48-39P1	121
48-39P3	102
48-43P3	102
48-43P4	102
48-45N2	199
48-56P1	100
48-57B2	121
48-57B42	121
48-110	113A
48-171-A06	102A
48-191A01	116
48-191A01-9	116
48-191A02	116
48-191A03	116
48-191A04	116
48-191A05	506
48-191A05A	506
48-191A06	116
48-191A07	116
48-191A07A	116
48-191A08	116
48-191A09	116
48-191A11	116
48-971-A95	123AP
48-971A04	108
48-971A05	123AP
48-971A13	124
48-971A203	160
48-1005	116
48-1050-SL12318	9930
48-1050-SL12319	9932
48-1050-SL12320	9933
48-1050-SL12321	9936
48-1050-SL12322	9944
48-1050-SL12323	9945
48-1050-SL12324	9946
48-1050-SL12325	9962
48-1050-SL12326	9093
48-1050-SL12327	9099
48-2000	7400
48-2005	7402
48-2011	74S04
48-2013	7406
48-2015	7407

PART NUMBER	NTE REPLACEMENT
48-2020	7408
48-2035	7420
48-2045	7427
48-2055	7432
48-2067	7474
48-2071	74LS112A
48-2079	74148
48-2080	74151
48-2090	74157
48-2095	74161
48-2100	74166
48-2115	74193
48-2212	978
48-2215	994M
48-2217	967
48-2221	829
48-2302	74LS04
48-2305	74LS74A
48-2307	74LS138
48-2308	74LS161A
48-2314	74LS374
48-2316	74LS21
48-2321	74LS139
48-2322	74LS153
48-2328	74LS241
48-2332	74LS11
48-2333	74LS174
48-2334	2114
48-2337	961
48-2338	966
48-2340	74LS14
48-2341	74LS86
48-2342	987
48-3003A02	293
48-3003A03	107
48-3003A04	106
48-3003A05	123AP
48-3003A06	159
48-3003A09	312
48-3003A10	222
48-3003A11	123AP
48-3003A12	123AP
48-4937	233
48-6502	6502
48-6712	113A
48-6712A02	178MP
48-6712A11	177
48-6720A02	177
48-8213H07	5224A
48-8213H08	5186A
48-8240C06	116
48-8240C07	519
48-8240C08	116
48-8240C09	177
48-8240C10	506
48-8240C11	519
48-8240C12	506
48-8240C13	177
48-8240C14	519
48-8240C15	177
48-8240C16	519
48-8240C17	519
48-8240C18	519
48-8375D02	5455
48-8613	112
48-8613-3	126
48-8619-3	109
48-9109	8080A
48-9112	990
48-10001-A030-1	116
48-10001-A01	116
48-10001-A03	116
48-10062A01	116
48-10062A01A	116
48-10062A02	116
48-10062A04	116
48-10062A05	116
48-10062A05A	116
48-10073A01	102A
48-10073A02	102
48-10074A01	102A
48-10074A02	102
48-10074A03	102A
48-10075A01	121MP
48-10075A02	121MP
48-10075A03	121MP
48-10075A04	121MP
48-10075A05	121MP
48-10075A06	121MP
48-10075A07	121MP
48-10075A08	121MP
48-10079A01	160
48-10079A02	160
48-10103A01	121MP
48-10103A02	121MP
48-10103A03	121MP
48-10103A04	121MP
48-10103A05	121MP
48-10103A06	104
48-10103A07	121MP
48-10103A08	121MP
48-10103A09	121MP
48-10103A10	121MP
48-10103A11	104
48-10346A01	135A
48-10346A02	507
48-10516C02	614
48-10577A01	177
48-10577A04	125
48-10641D62	137A
48-10813A01	5013A
48-12091A	181
48-12443	102A
48-13001A01	124
48-13309X3	152
48-13466	103
48-13470	108
48-13481	123AP
48-13494A1G	199
48-13707	220
48-14784J03	184
48-17162A06	102A
48-17162A10	158
48-17162A13	124
48-17162A17	102A
48-17162A22	102A
48-17271A03	102A
48-21598B01	102A
48-21785J61	311
48-22310K51	311
48-32000	142A
48-34816	177
48-37312	242
48-40004S05	299
48-40004S06	235
48-40059U06	5012A
48-40059U34	5020A
48-40118B01	159
48-40118B01A	159
48-40170-G01	199
48-40170G01	123AP
48-40171G01	123AP
48-40172G01	131
48-40212	128
48-40235G01	116
48-40235G02	116
48-40246-G01	199
48-40246G01	123AP
48-40246G02	123AP
48-40247G01	107
48-40247G02	199
48-40382J01	186
48-40383J01	187
48-40458A04	136A
48-40458A06	5072A
48-40458A064	5072A
48-40516C01	614
48-40516C02	614
48-40606J01	123AP
48-40606J02	199
48-40607J01	199
48-40627U01	65
48-40627U02	85
48-40734P01	295
48-40738P01	177
48-40739P01	116
48-40764P01	235
48-41266G01	506
48-41508A01	116
48-41508A02	116
48-41763C01	5072A
48-41763C02	5072A
48-41763C03	5072A
48-41763C1	5072A
48-41768G01	109
48-41768G02	109
48-41784J03	184
48-41784J04	186A
48-41785J03	185
48-41785J04	187A
48-41815J02	107
48-41816J01	107
48-41816J02	199
48-41873J01	5072A
48-41873J02	139A
48-41873J03	140A
48-41884J03	184
48-42098B01	159
48-42098B01A	159
48-42182U01	199
48-42383A0	614
48-42383A01	614
48-42485B01	614
48-42503P01	611
48-42884P01	295
48-42885P01	235
48-42899J01	177
48-43238G01	159
48-43240G01	236
48-43241G01	153
48-43265G01	116
48-43283A01	614
48-43351A01	102A
48-43351A02	107
48-43351A03	108
48-43351A04	108
48-43351A05	108
48-43354A81	123AP
48-43354A82	123AP
48-43354A83	158
48-43467J01	132
48-43992J01	229
48-44080J05	139A
48-44125A07	125
48-44160U02	85
48-44883G01	152
48-44884G01	153
48-44885G01	199
48-44885G02	123AP
48-44886G01	289
48-44887G0	116
48-45323G01	614
48-46669H01	177
48-57120A01	116
48-60022A13	123AP
48-60022A14	175
48-60022A97	109
48-60022A98	116
48-60077A06	109
48-60154A01	110MP
48-61074B01	109
48-61767B01	109
48-62334A01	109
48-62334A02	109
48-63005A66	123AP
48-63005A72	123AP
48-63006A56	109
48-63026A45	124
48-63026A46	108
48-63026A47	123AP
48-63026A48	123AP
48-63029A16	160
48-63029A17	158
48-63029A18	102
48-63029A19	102
48-63029A20	109
48-63029A60	160
48-63029A90	126
48-63029A91	102
48-63029A92	100
48-63029A93	102
48-63029A94	102
48-63044A05	102A
48-63075A72	160
48-63075A73	160
48-63075A74	126
48-63075A75	160
48-63075A76	100
48-63075A78	109
48-63076A52	123AP
48-63076A81	107
48-63076A82	107
48-63076A83	123AP
48-63077A03	100
48-63077A10	123AP
48-63077A11	109
48-63077A29	108
48-63077A30	123AP
48-63077A31	123AP
48-63077A32	109
48-63078A52	107
48-63078A54	107
48-63078A59	100
48-63078A60	100
48-63078A61	100
48-63078A62	158
48-63078A63	160
48-63078A64	100
48-63078A65	126
48-63078A66	158
48-63078A68	158
48-63078A69	158
48-63078A70	123AP
48-63078A71	123AP
48-63078A86(NPN)	103A
48-63078A86(PNP)	102A
48-63079A97	123AP
48-63081A82	160
48-63082A15	100
48-63082A16	158
48-63082A24	126
48-63082A25	123AP
48-63082A26	123AP
48-63082A27	123AP
48-63082A45	123AP
48-63082A71	123AP
48-63084A03	102A
48-63084A04	102A
48-63084A05	102A
48-63084A06	109
48-63086A16	116
48-63086A19	158
48-63090A01	109
48-63590A01	109
48-64169	116
48-64978A10	121MP
48-64978A11	121MP
48-64978A24	121MP
48-64978A27	160
48-64978A28	160
48-64978A29	160
48-64978A39	222
48-64978A40	159
48-64978A40A	159
48-64978A41	159
48-64978A41A	159
48-65108A23	102A
48-65108A62	102A
48-65112A65	108
48-65112A67	108
48-65112A68	161
48-65112A73	112
48-65113A84	112
48-65113A88	108
48-65118A64	108
48-65123A67	108
48-65123A94	123AP
48-65123A95	108
48-65132A79	160
48-65144A72	108
48-65145A74	116
48-65146A61	161
48-65146A62	161
48-65146A63	161
48-65147A72	123AP
48-65173A78	161
48-65174A24	161
48-65177A77	129
48-65177A77A	129
48-65837A02	109
48-65937A02	109
48-66037A03	116
48-66037A04	116
48-66037A05	116
48-66037A08	116
48-66037A10	116
48-66037A12	116
48-66629A02	116
48-66629A03	116
48-66629A05	116
48-66629A06	116
48-66653A001	116
48-66653A002	116
48-66653A003	118
48-66653A005	118
48-66653A0053	118
48-66653A02	120
48-66653APT001	120
48-66653APT003	118
48-66653APT0U1	120
48-66653APT015	118
48-66653APT1003	118
48-66653APTOU1	102
48-66654A02	116
48-66865A02	358B
48-67020A11	109
48-67120A0607	116
48-67120A01	116
48-67120A02	177
48-67120A03	177
48-67120A04	125
48-67120A05	125
48-67120A06	116
48-67120A07	116
48-67120A09	109
48-67120A10	125
48-67120A11	177
48-67120A13	177
48-67120AB	177
48-67926A01	116
48-68688A79	116
48-68688A79B	116
48-69394A01	123AP
48-69723A01	513
48-69723A02	513
48-69723AD2-185	513
48-69723B02	513
48-82095C01	116
48-82095C02	116
48-82095C03	116
48-82095C64	116
48-82137H01	5192A
48-82137H02	5200A
48-82137H03	5232A
48-82137H04	5174AK
48-82137H05	5175AK
48-82137H06	5188A
48-82137H09	5229A
48-82139G01	109
48-82139G02	109
48-82178A01	109
48-82178A02	109
48-82178A03	109
48-82178A04	109
48-82178A05	109
48-82178A06	109
48-82178A07	109
48-82178A08	109
48-82178A09	109
48-82178A10	109
48-82178A11	109
48-82178A12	109
48-82178A13	109
48-82256C01	5013A
48-82256C02	5014A
48-82256C03	5009A
48-82256C05	5045A
48-82256C06	141A
48-82256C07	5009A
48-82256C08	5016A
48-82256C09	5016A
48-82256C10	144A
48-82256C11	5019A
48-82256C12	5011A
48-82256C13	5023A
48-82256C14	5024A
48-82256C15	5010A
48-82256C16	5016A
48-82256C17	5021A
48-82256C18	5018A
48-82256C19	5014A
48-82256C20	5033A
48-82256C22	139A
48-82256C23	5014A
48-82256C24	5027A
48-82256C25	5021A
48-82256C26	5005A
48-82256C27	151A
48-82256C28	140A
48-82256C29	5090A
48-82256C30	5096A
48-82256C31	5031A
48-82256C32	5019A
48-82256C33	5002A
48-82256C34	5020A
48-82256C35	135A
48-82256C36	5083A
48-82256C37	5071A
48-82256C38	5018A
48-82256C39	5079A
48-82256C40	140A
48-82256C42	5082A
48-82256C43	139A
48-82256C44	5015A
48-82256C45	5017A
48-82256C46	5067A
48-82256C47	5014A
48-82256C48	5022A
48-82256C49	5031A
48-82256C50	5022A
48-82256C51	135A
48-82256C53	5077A
48-82256C54	142A
48-82256C56	139A
48-82256C57	5079A
48-82256C58	5086A
48-82256C59	145A
48-82292A01	109
48-82292A02	109
48-82292A03	109
48-82292A04	109
48-82292A05	109
48-82292S03	109
48-82392B01	177
48-82392B02	177
48-82392B03	177
48-82392B04	177
48-82392B05	177
48-82392B06	177
48-82392B07	177
48-82392B08	177
48-82392B09	177
48-82392B10	177
48-82392B11	177
48-82392B12	177
48-82392B13	177
48-82392B14	177
48-82392B15	177
48-82420C01	177
48-82420C02	177
48-82420C03	519
48-82420C04	519
48-82420C05	177
48-82466H	125
48-82466H01	116
48-82466H02	116
48-82466H03	116
48-82466H04	116
48-82466H06	116
48-82466H07	116
48-82466H12	506
48-82466H13	506
48-82466H14	506
48-82466H15	506
48-82466H16	506
48-82466H17	506
48-82466H18	125
48-82466H19	506
48-82466H21	506
48-82466H25	506
48-82466H27	506
48-82466H28	506
48-82732C04	5944
48-82965F	5635
48-83461E01	5075A
48-83461E02	5022A
48-83461E03	5066A
48-83461E04	5093A
48-83461E05	5070A
48-83461E06	5096A
48-83461E07	5075A
48-83461E08	147A
48-83461E09	5090A
48-83461E10	5010A
48-83461E11	5082A
48-83461E12	146A
48-83461E13	5068A
48-83461E14	5096A
48-83461E15	5018A
48-83461E16	5095A
48-83461E17	5001A
48-83461E18	5027A
48-83461E19	5067A
48-83461E20	146A
48-83461E21	5129A
48-83461E22	5029A
48-83461E23	510
48-83461E24	5028A
48-83461E25	5014A
48-83461E26	5031A
48-83461E27	5012A
48-83461E28	5141A
48-83461E30	148A
48-83461E31	5022A
48-83461E32	5016A
48-83461E33	5027A
48-83461E34	5117A
48-83461E35	5137A
48-83461E36	137A
48-83461E37	5077A
48-83461E38	136A
48-83461E39	5135A
48-83461E40	5010A
48-83461E41	135A
48-83461E42	5071A
48-83461E43	5006A
48-83461E44	5115A
48-83741C01	5465
48-83750G01	123AP
48-83750G02	121
48-83750G06	126
48-83875D01	5454
48-83875D03	5543
48-83875D06	5454
48-84755H01	5401
48-84973CB1	5547
48-86148	116
48-86168-3	109
48-86193	109
48-86200-3	109
48-86289-3	177
48-86308-3	506
48-86343-3	109
48-86376-3	123AP
48-86429-3	234
48-86444-2	513
48-86444-3	513
48-86475-3	162
48-86797-3	5014A
48-86904GF	160
48-90066A01	113A
48-90068A01	120
48-90158A01	506
48-90165A01	159
48-90165A01A	159
48-90172A01	123AP
48-90210A01	109
48-90222A08	109
48-90229A01	116
48-90232A01	161
48-90232A03	108
48-90232A04	108
48-90232A05	123AP
48-90232A06	129
48-90232A06A	129
48-90232A07	124
48-90232A08	128
48-90232A09	129
48-90232A09A	129
48-90232A10	108
48-90232A11	123AP
48-90232A12	129
48-90232A12A	129
48-90232A13	123AP
48-90232A14	132
48-90232A15	129
48-90232A15A	129
48-90232A16	124
48-90232A17	161
48-90232A18	161
48-90232A19	108
48-90233A01	109
48-90233A04	116
48-90233A05	112
48-90233A06	109
48-90233A07	134A
48-90233A08	109
48-90234A01	116
48-90234A02	117
48-90234A03	120
48-90234A11	175
48-90234A12	506
48-90234A13	289
48-90234A14	290
48-90234A36	184
48-90234A38	234
48-90234A39	312
48-90234A60	612
48-90234A61	5000A
48-90234A62	5013A
48-90234A64	199
48-90234A66	112
48-90234A97	5009A
48-90234A98	5027A
48-90234A99	234
48-90235A01	113A
48-90343A02	107
48-90343A06	199
48-90343A52	165
48-90343A53	506
48-90343A54	506
48-90343A56	175
48-90343A57	287
48-90343A58	288
48-90343A59	234
48-90343A61	198
48-90343A62	125
48-90343A64	116
48-90343A66	107
48-90343A68	290
48-90343A73	199
48-90343A75	229
48-90343A76	186A
48-90343A77	289
48-90343A79	199
48-90343A80	229
48-90343A83	199
48-90343A85	295
48-90343A88	601
48-90343A89	605A
48-90343A91	116
48-90343A92	116
48-90343A93	116
48-90420A01	194
48-90420A02	187A
48-90420A03	177
48-90420A04	177
48-90420A05	294
48-90420A06	153
48-90420A73	287
48-90420A79	116
48-90420A80	116
48-90420A92	157
48-90420A97	116
48-90420A98	506
48-90445A05	85
48-90445A44	90
48-90445A57	295
48-90445A60	558
48-90445A62	187A
48-90445A63	152
48-90445A64	107
48-90445A66	5024A
48-90445A67	5033A
48-90445A68	234
48-90445A70	157
48-90445A71	157
48-90445A72	85
48-90445A73	85
48-90445A74	85
48-97046A02	102A
48-97046A03	102A
48-97046A04	108
48-97046A05	107
48-97046A06	107
48-97046A07	107
48-97046A08	126
48-97046A09	126
48-97046A1S	131
48-97046A10	102A
48-97046A14	5069A
48-97046A15	131
48-97046A16	126
48-97046A17	107
48-97046A18	108
48-97046A20	107
48-97046A21	107
48-97046A22	123AP
48-97046A23	123AP
48-97046A24	123AP
48-97046A25	161
48-97046A26	159
48-97046A27	159
48-97046A28	123AP
48-97046A29	128
48-97046A30	152
48-97046A31	131
48-97046A32	102A
48-97046A33	102A
48-97046A34	102A
48-97046A36	129
48-97046A37	158
48-97046A38	152
48-97046A39	129
48-97046A40	128
48-97046A42	123AP
48-97046A43	123AP
48-97046A45	161
48-97046A46	123AP
48-97046A47	132
48-97046A48	132
48-97046A50	123AP
48-97046A51	108
48-97046A52	123AP
48-97046A53	102
48-97046A54	102A
48-97046A55	102A
48-97046A56	102A
48-97046A57	102A
48-97048A01	177
48-97048A02	109
48-97048A04	116
48-97048A05	110MP
48-97048A06	109
48-97048A07	116
48-97048A08	142A
48-97048A10	116
48-97048A16	142A
48-97048A17	177
48-97048A18	116
48-97048A19	109
48-97048A20	125
48-97127A01	116
48-97127A02	108
48-97127A03	108
48-97127A04	128
48-97127A05	158
48-97127A06	107
48-97127A09	158
48-97127A012	123AP
48-97127A013	123AP
48-97127A015	106
48-97127A018	123AP
48-97127A019	128
48-97127A12	123AP
48-97127A13	123AP
48-97127A15	106
48-97127A18	123AP
48-97127A19	123AP
48-97127A20	102A
48-97127A22	102A
48-97127A23	158
48-97127A24	123AP
48-97127A29	123AP
48-97127A30	102A
48-97127A31	102A
48-97127A32	102
48-97127A33	123AP
48-97162A01	108
48-97162A02	108
48-97162A03	126
48-97162A04	123AP
48-97162A05	123AP
48-97162A06	158
48-97162A07	158
48-97162A08	158
48-97162A09	123AP
48-97162A11	102A
48-97162A12	123AP
48-97162A15	123AP
48-97162A16	102A
48-97162A18	102A
48-97162A19	102A
48-97162A20	102A
48-97162A21	123AP
48-97162A23	123AP
48-97162A24	102A
48-97162A25	102A

PART NUMBER	NTE REPLACEMENT
48-97162A26	107
48-97162A28	161
48-97162A30	161
48-97162A31	161
48-97162A32	161
48-97162A33	123AP
48-97162A34	158
48-97162A35	184
48-97162A69	184
48-97168A01	109
48-97168A02	116
48-97168A03	110MP
48-97168A04	109
48-97168A06	116
48-97168A07	109
48-97168A09	109
48-97168A10	116
48-97168A11	116
48-97168A13	109
48-97168A14	116
48-97172A01	116
48-97177A010	185
48-97177A01	132
48-97177A02	161
48-97177A03	161
48-97177A04	108
48-97177A06	132
48-97177A07	108
48-97177A08	108
48-97177A09	123AP
48-97177A011	185
48-97177A015	109
48-97177A10	188
48-97177A11	189
48-97177A12	123AP
48-97177A13	123AP
48-97177A14	159
48-97177A14A	159
48-97177A15	109
48-97177H01	133
48-97221A01	102A
48-97221A02	102A
48-97221A03	102A
48-97221A04	102A
48-97221A05	102A
48-97222A01	109
48-97222A02	116
48-97238A01	126
48-97238A02	126
48-97238A03	126
48-97238A04	123AP
48-97238A05	102A
48-97238A06	131
48-97238A07	102A
48-97239A01	109
48-97270A01	116
48-97270A02	109
48-97271A01	102A
48-97271A02	102A
48-97271A03	102A
48-97271A04	102A
48-97271A05	160
48-97271A06	160
48-97271A2	102A
48-97271A3	102A
48-97271A4	102A
48-97271A5	102A
48-97271A6	102A
48-97305A02	136A
48-97305A03	166
48-97305A05	136A
48-97762A02	108
48-97768A06	125
48-103083	105
48-123173	123AP
48-123522	126
48-123536	126
48-123802	123AP
48-123803	123AP
48-124158	102A
48-124159	102A
48-124175	102A
48-124204	121
48-124216	101
48-124217	101
48-124218	101
48-124219	102
48-124220	101
48-124221	101
48-124246	121
48-124247	121
48-124255	126
48-124256	126
48-124258	158
48-124259	158
48-124275	158
48-124276	158
48-124279	158
48-124285	121
48-124286	102
48-124296	160
48-124297	102
48-124300	158
48-124302	121
48-124303	102
48-124304	102
48-124305	126
48-124306	102
48-124307	100
48-124308	100
48-124309	102
48-124310	126
48-124311	126
48-124312	126
48-124314	100
48-124315	100
48-124316	126
48-124318	102
48-124319	102
48-124322	158
48-124327	100
48-124328	100
48-124329	105
48-124331	121
48-124332	121
48-124343	100
48-124344	100
48-124345	100
48-124346	126
48-124347	126
48-124348	126
48-124349	126
48-124350	126
48-124351	126
48-124352	126
48-124353	102
48-124354	102
48-124355	102
48-124356	121
48-124357	100
48-124358	100
48-124359	100
48-124360	126
48-124363	160
48-124364	126
48-124365	126
48-124366	126
48-124367	126
48-124368	160
48-124370	100
48-124371	100
48-124373	102A
48-124377	126
48-124378	100
48-124379	100
48-124380	100
48-124388	126
48-124389	100
48-124398	100
48-124443	100
48-124444	100
48-124445	100
48-124446	100
48-124604	121
48-124606	121
48-124667	123A
48-124804	108
48-124805	108
48-124808	108
48-125204	121
48-125208	121
48-125228	126
48-125229	100
48-125230	100
48-125231	100
48-125232	100
48-125233	101
48-125234	101
48-125235	101
48-125236	101
48-125237	100
48-125238	100
48-125239	100
48-125240	100
48-125242	100
48-125252	105
48-125267	121
48-125271	158
48-125276	158
48-125278	126
48-125282	102A
48-125285	102A
48-125286	105
48-125288	121
48-125294	102A
48-125296	100
48-125299	105
48-125332	121
48-127021	5071A
48-128093	126
48-128094	158
48-128095	126
48-128096	126
48-128219	160
48-128239	101
48-128303	100
48-129934	121
48-129935	121
48-129936	121
48-129937	121
48-134101	126
48-134145	186
48-134173	123AP
48-134190A1G	161
48-134302	121
48-134372	126
48-134387	109
48-134404	126
48-134405	126
48-134406	126
48-134407	158
48-134408	102A
48-134411	160
48-134412	160
48-134413	160
48-134414	126
48-134415	100
48-134416	100
48-134417	100
48-134418	100
48-134419	100
48-134420	100
48-134421	100
48-134422	100
48-134423	100
48-134424	100
48-134425	100
48-134426	100
48-134427	100
48-134428	100
48-134429	100
48-134430	105
48-134431	176
48-134432	100
48-134433	100
48-134434	126
48-134439	160
48-134443	100
48-134444	100
48-134445	100
48-134446	100
48-134447	121
48-134448	121
48-134449	121
48-134450	100
48-134454	126
48-134456	126
48-134457	126
48-134458	100
48-134459	127
48-134462	100
48-134463	121
48-134464	123AP
48-134465	123AP
48-134466	100
48-134467	5896
48-134468	100
48-134469	100
48-134470	100
48-134471	100
48-134472	100
48-134473	100
48-134474	100
48-134475	100
48-134476	100
48-134477	100
48-134478	129
48-134478A	129
48-134479	126
48-134480	126
48-134481	126
48-134482	158
48-134483	158
48-134484	160
48-134485	160
48-134486	160
48-134487	121
48-134488	121
48-134493	121
48-134494	100
48-134495	100
48-134496	100
48-134499	100
48-134500	100
48-134501	100
48-134504	160
48-134506	160
48-134507	160
48-134508	126
48-134509	100
48-134510	100
48-134512	100
48-134514	126
48-134519	121
48-134520	101
48-134521	126
48-134522	126
48-134524	160
48-134525	159
48-134525A	159
48-134526	160
48-134535	100
48-134536	126
48-134537	109
48-134538	100
48-134539	100
48-134540	100
48-134541	100
48-134542	100
48-134543	100
48-134544	100
48-134545	126
48-134547	126
48-134552	144A
48-134553	100
48-134554	100
48-134555	100
48-134556	100
48-134557	100
48-134558	100
48-134559	100
48-134560	121
48-134561	126
48-134562	100
48-134563	100
48-134564	100
48-134565	100
48-134567	100
48-134570	121
48-134572	102A
48-134573	102
48-134574	121
48-134575	121
48-134576	126
48-134577	126
48-134578	126
48-134579	160
48-134582	121
48-134583	121
48-134584	121
48-134585	176
48-134587	109
48-134588	109
48-134591	126
48-134592	121
48-134600	126
48-134601	126
48-134602	126
48-134603	100
48-134604	100
48-134605	126
48-134606	121
48-134610	100
48-134611	121
48-134612	121
48-134613	121
48-134621	102A
48-134622	105
48-134623	127
48-134625	100
48-134626	100
48-134631	100
48-134632	102A
48-134633	158
48-134634	121
48-134635	126
48-134636	100
48-134637	100
48-134638	121
48-134639	121
48-134640	179
48-134641	100
48-134643	148A
48-134644	121
48-134645	121
48-134646	121
48-134647	121
48-134648	154
48-134649	121
48-134651	121
48-134652	127
48-134653	139A
48-134654	123AP
48-134655	100
48-134656	100
48-134657	100
48-134659	144A
48-134663	147A
48-134664	123AP
48-134665	123AP
48-134666	123AP
48-134667	123AP
48-134668	123AP
48-134669	123AP
48-134670	121
48-134671	156
48-134672	121
48-134673	123AP
48-134674	123AP
48-134675	123AP
48-134676	160
48-134677	160
48-134678	160
48-134679	160
48-134680	126
48-134681	126
48-134682	126
48-134683	126
48-134684	126
48-134689	128
48-134690	123AP
48-134691	123AP
48-134692	179
48-134693	160
48-134694	160
48-134695	179
48-134696	121
48-134697	126
48-134698	135A
48-134699	150A
48-134700	101
48-134701	130
48-134701A	130
48-134702	159
48-134702A	159
48-134703	123AP
48-134704	150A
48-134705	123AP
48-134706	108
48-134709	108
48-134711	126
48-134713	108
48-134714	123AP
48-134715	130
48-134715A	130
48-134717	108
48-134718	123AP
48-134719	108
48-134720	123AP
48-134721	123AP
48-134722	121
48-134723	121
48-134724	108
48-134725	108
48-134726	123AP
48-134727	104
48-134728	151A
48-134729	179
48-134730	121
48-134731	104
48-134732	123AP
48-134733	123AP
48-134733A	123AP
48-134734	123AP
48-134734A	123AP
48-134737	123AP
48-134738	121
48-134739	123AP
48-134739A	124
48-134740	179
48-134741	179
48-134742	179
48-134743	179
48-134744	121
48-134745	159
48-134745A	159
48-134746	121
48-134747	104MP
48-134748	179
48-134749	179
48-134750	121
48-134751	121
48-134752	179
48-134753	179
48-134756	161
48-134757	121
48-134758	121
48-134759	121
48-134760	179
48-134761	179
48-134763	121
48-134764	121
48-134765	123AP
48-134766	121
48-134767	121
48-134768	123AP
48-134769	116
48-134772	108
48-134773	108
48-134774	108
48-134775	123AP
48-134776	123AP
48-134777	108
48-134779	108
48-134780	108
48-134781	177
48-134782	123AP
48-134783	108
48-134784	108
48-134785	123AP
48-134786	108
48-134787	108
48-134788	179
48-134789	107
48-134790	116
48-134791	123AP
48-134792	6400
48-134795	126
48-134796	126
48-134797	126
48-134798	126
48-134800	108
48-134801	123AP
48-134802	123AP
48-134803	123AP
48-134804	123AP
48-134805	229
48-134806	108
48-134807	123AP
48-134808	123AP
48-134809	123AP
48-134810	199
48-134811	123AP
48-134813	199
48-134814	108
48-134815	159
48-134815A	159
48-134816	177
48-134817	123AP
48-134818	108
48-134819	154
48-134820	108
48-134821	108
48-134822	123AP
48-134823	199
48-134824	123AP
48-134825	229
48-134826	108
48-134827	108
48-134828	108
48-134829	159
48-134829A	159
48-134830	288
48-134830A	234
48-134831	234
48-134831A	234
48-134832	234
48-134832A	234
48-134833	159
48-134833A	159
48-134837	107
48-134838	128
48-134839	123AP
48-134840	123AP
48-134841	123AP
48-134842	123AP
48-134843	154
48-134844	123AP
48-134845	107
48-134846	287
48-134847	123AP
48-134848	123AP
48-134850	141A
48-134851	141A
48-134852	123AP
48-134853	154
48-134854	123AP
48-134855	108
48-134856	176
48-134857	229
48-134858	147A
48-134859	126
48-134860	126
48-134861	126
48-134862	126
48-134865	159
48-134865A	159
48-134866	159
48-134866A	159
48-134867	159
48-134867A	159
48-134868	159
48-134868A	159
48-134869	159
48-134869A	159
48-134870	159
48-134870A	159
48-134871	159
48-134871A	159
48-134872	124
48-134879	108
48-134880	126
48-134882	130
48-134884	130
48-134885	124
48-134888	121
48-134889	123AP
48-134891	108
48-134892	108
48-134893	108
48-134894	123AP
48-134895	123AP
48-134896	123AP
48-134897	123AP
48-134898	154
48-134899	123AP
48-134900	162
48-134901	163A
48-134902	108
48-134903	123AP
48-134904	107
48-134904A1G	107
48-134904F	107
48-134905	123AP
48-134906	123AP
48-134907	104
48-134908	108
48-134909	159
48-134909A	159
48-134910	159
48-134910A	159
48-134910F	159
48-134911	159
48-134912	5072A
48-134913	159
48-134913A	159
48-134914	159
48-134914A	159
48-134915	159
48-134915A	159
48-134916	178MP
48-134917	178MP
48-134918	123AP
48-134919	154
48-134920	124
48-134921	506
48-134922	107
48-134923	107
48-134924	107
48-134925	107
48-134926	107
48-134927	154
48-134928	123AP
48-134929	123AP
48-134930	121
48-134931	101
48-134932	233
48-134932(3RD-IF)	233
48-134933	123AP
48-134933E	123AP
48-134934	127
48-134935	123AP
48-134936	175
48-134937	108
48-134938	121
48-134939	506
48-134940	159
48-134940A	159
48-134941	128
48-134942	123AP
48-134943	159
48-134943A	159
48-134944	133
48-134945	107
48-134946	108
48-134947	121
48-134948	108
48-134949	108
48-134950	108
48-134951	129
48-134951A	129
48-134952	123AP
48-134953	128
48-134954	110MP
48-134955	149A
48-134956	100
48-134957	139A
48-134958	116
48-134959	116
48-134960	108
48-134961	107
48-134962	107
48-134963	107
48-134964	107
48-134965	107
48-134966	107
48-134967	159
48-134967A	159
48-134969	130
48-134970	123AP
48-134971	148A
48-134972	124
48-134973	159
48-134973A	159
48-134974	121
48-134975	159
48-134975A	159
48-134977	121
48-134978	506
48-134979	108
48-134980	123AP
48-134981	107
48-134982	128
48-134983	108
48-134985	108
48-134987	185
48-134988	123AP
48-134989	159
48-134989A	159
48-134990	116
48-134991	135A
48-134992	123AP
48-134993	136A
48-134994	123AP
48-134995	163A
48-134996	123AP
48-134997	199
48-134998	157
48-136665	123AP
48-137000	143A
48-137001	127
48-137002	154
48-137003	123AP
48-137004	108
48-137005	128
48-137006	108
48-137007	123AP
48-137008	130
48-137008A	130
48-137010	123AP
48-137011	190
48-137013	123AP
48-137014	123AP
48-137015	199
48-137017	144A
48-137019	123AP
48-137020	159
48-137020A	159
48-137021	159
48-137022	123AP
48-137023	133
48-137024	5400
48-137025	104
48-137026	104
48-137027	130
48-137027A	130
48-137029	116
48-137030	241
48-137031	121
48-137032	159
48-137032A	159
48-137033	108
48-137034	146A
48-137035	154
48-137036	130
48-137036A	130
48-137037	184
48-137039	176
48-137040	107
48-137041	128
48-137043	123AP
48-137044	123AP
48-137045	159
48-137045A	159
48-137046	159
48-137047	123AP
48-137048	144A
48-137049	180
48-137053	130
48-137053A	130
48-137055	108
48-137056	123AP
48-137057	123AP
48-137058	6400
48-137059	107
48-137061	159
48-137062	5033A
48-137065	6407
48-137066	106
48-137067	159
48-137067A	159
48-137068	159
48-137068A	159
48-137069	159
48-137069A	159
48-137070	220
48-137071	107
48-137072	123AP
48-137073	123AP

PART NUMBER	NTE REPLACEMENT
48-137074	116
48-137075	107
48-137076	107
48-137077	107
48-137078	104
48-137079	130
48-137079A	130
48-137080	197
48-137082	503
48-137083	123AP
48-137088	128
48-137089	123AP
48-137090	159
48-137090A	159
48-137091	188
48-137092	188
48-137093	190
48-137095	184
48-137096	123AP
48-137098	5800
48-137101	123AP
48-137102	104
48-137104	108
48-137105	108
48-137106	123AP
48-137107	123AP
48-137108	123AP
48-137109	123AP
48-137110	123AP
48-137111	123AP
48-137112	506
48-137113	191
48-137114	505
48-137115	123AP
48-137116	181
48-137118	121
48-137119	121
48-137120	121
48-137121	179
48-137122	121
48-137123	121
48-137124	121
48-137125	179
48-137126	108
48-137127	159
48-137127A	159
48-137128	184
48-137130	139A
48-137132	146A
48-137133	507
48-137134	163A
48-137136	108
48-137137	123AP
48-137138	123AP
48-137139	123AP
48-137140	108
48-137142	5444
48-137143	116
48-137144	108
48-137145	184
48-137146	184
48-137147	184
48-137148	184
48-137149	188
48-137153	185
48-137154	185
48-137155	185
48-137156	185
48-137157	185
48-137158	108
48-137160	189
48-137164	139A
48-137165	6400
48-137166	108
48-137167	178MP
48-137168	189
48-137169	188
48-137170	137A
48-137171	123AP
48-137171D	123AP
48-137172	123AP
48-137173	159
48-137173A	159
48-137174	123AP
48-137175	130
48-137175A	130
48-137176	159
48-137176A	159
48-137177	142A
48-137178	127
48-137179	163A
48-137180	130
48-137180A	130
48-137183	5882
48-137184	5484
48-137185	197
48-137188	141A
48-137190	108
48-137191	108
48-137192	123AP
48-137193	158
48-137194	108
48-137195	159
48-137196	108
48-137197	161
48-137198	116
48-137199	102
48-137200	184
48-137202	188
48-137203	163A
48-137205	125
48-137206	123AP
48-137207	124
48-137208	116
48-137209	143A
48-137210	137A
48-137211	184
48-137212	125
48-137213	104
48-137214	131
48-137215	104
48-137216	104
48-137217	104
48-137218	104
48-137219	104
48-137220	104
48-137234	127
48-137235	127
48-137238	194
48-137239	191
48-137240	189
48-137251	130
48-137256	185
48-137257	123AP
48-137258	185
48-137259	197
48-137260	123AP
48-137265	123AP
48-137266	147A
48-137267	131
48-137268	131
48-137269	131
48-137270	131
48-137271	131
48-137272	142A
48-137277	184
48-137278	194
48-137279	5014A
48-137280	5400
48-137281	5404
48-137282	6400
48-137290	125
48-137291	116
48-137295	5404
48-137297	141A
48-137298	144A
48-137299	109
48-137300	199
48-137301	125
48-137302	125
48-137303	185
48-137304	185
48-137306	5030A
48-137307	128
48-137308	131
48-137309	196
48-137310	197
48-137311	241
48-137312	153
48-137313	219
48-137314	189
48-137315	128
48-137316	125
48-137317	123A
48-137318	159
48-137319	188
48-137320	189
48-137321	193
48-137322	5011A
48-137323	184
48-137324	159
48-137325	199
48-137326	162
48-137327	5804
48-137328	5016A
48-137329	104
48-137330	5024A
48-137331	242
48-137332	194
48-137333	130
48-137334	141A
48-137336	123AP
48-137337	5010A
48-137338	5486
48-137339	108
48-137340	5804
48-137341	165
48-137342	127
48-137342-P47	127
48-137343	132
48-137344	130
48-137347	125
48-137348	125
48-137349	5442
48-137350	123AP
48-137351	229
48-137352	108
48-137353	123AP
48-137354	123AP
48-137355	108
48-137364	154
48-137365	144A
48-137366	159
48-137367	127
48-137368	130
48-137369	241
48-137370	242
48-137371	108
48-137372	108
48-137373	123AP
48-137374	123AP
48-137375	108
48-137376	108
48-137377	123AP
48-137378	123AP
48-137379	159
48-137380	159
48-137381	159
48-137382	159
48-137383	159
48-137384	123AP
48-137385	177
48-137386	194
48-137387	137A
48-137388	108
48-137390	199
48-137391	159
48-137392	172A
48-137393	5019A
48-137394	5024A
48-137395	5404
48-137396	152
48-137397	513
48-137398	123AP
48-137399	123AP
48-137400	107
48-137415	154
48-137421	5072A
48-137437	152
48-137472	183
48-137473	184
48-137476	191
48-137483	108
48-137487	614
48-137488	222
48-137491	161
48-137495	109
48-137497	109
48-137498	123AP
48-137500	123AP
48-137501	153
48-137502	159
48-137504	159
48-137505	188
48-137506	152
48-137507	153
48-137509	123AP
48-137514	177
48-137524	283
48-137526	241
48-137527	242
48-137530	123AP
48-137531	5444
48-137533	506
48-137535	124
48-137539	163A
48-137540	153
48-137543	123AP
48-137546	506
48-137548	164
48-137549	184
48-137550	185
48-137551	506
48-137562	242
48-137566	153
48-137567	222
48-137573	177
48-137577	5073A
48-137610	189
48-137612	123AP
48-137639	172A
48-137644	5021A
48-137855	123AP
48-137978	121
48-137988	128
48-137998	123AP
48-155001	165
48-155006	154
48-155035	290
48-155039	109
48-155041	116
48-155042	186A
48-155044	369
48-155045	234
48-155046	297
48-155047	519
48-155051	287
48-155058	238
48-155059	198
48-155060	177
48-155061	109
48-155063	116
48-155065	234
48-155068	5633
48-155070	157
48-155071	194
48-155073	199
48-155074	186A
48-155077	177
48-155081	5074A
48-155083	125
48-155087	229
48-155088	123AP
48-155095	290
48-155097	186A
48-155099	116
48-155107	125
48-155108	125
48-155110	198
48-155111	186A
48-155113	5404
48-155114	109
48-155119	289
48-155124	389
48-155125	506
48-155126	116
48-155130	198
48-155131	605A
48-155136	116
48-155140	181
48-155141	85
48-155145	5010A
48-155146	137A
48-155148	605A
48-155152	525
48-155153	198
48-155154	199
48-155156	290
48-155157	247
48-155158	5089A
48-155159	177
48-155178	116
48-155180	5089A
48-155182	5077A
48-155184	5013A
48-155189	238
48-155192	5021A
48-155193	116
48-155198	125
48-155210	5021A
48-155213	198
48-155221	287
48-155223	552
48-155224	165
48-155225	5070A
48-155235	116
48-155236	116
48-155241	247
48-155252	3047
48-155255	116
48-155258	519
48-155259	376
48-191807	116
48-217241	181
48-232796	181
48-355002	123AP
48-355004	199
48-355005	198
48-355006	234
48-355007	159
48-355008	110MP
48-355009	109
48-355012	287
48-355013	506
48-355014	178MP
48-355016	116
48-355023	116
48-355025	116
48-355029	5404
48-355035	177
48-355036	177
48-355037	297
48-355038	198
48-355039	186A
48-355040	152
48-355042	175
48-355043	238
48-355044	198
48-355045	116
48-355046	601
48-355047	504
48-355048	506
48-355049	116
48-355050	5082A
48-355052	123AP
48-355053	229
48-355054	157
48-355055	193
48-355057	290
48-355058	288
48-355059	152
48-355062	5074A
48-401700-G01	199
48-443006AD6	5074A
48-644587	109
48-644676	160
48-644677	160
48-644678	102A
48-644679	158
48-644681	109
48-645867	160
48-646954	116
48-647311	109
48-647313	109
48-647713	109
48-647829	116
48-660370A05	116
48-674297U	112
48-674970	112
48-711052	109
48-733746	116
48-739300	109
48-741255	178MP
48-741280	109
48-741656	178MP
48-741724	178MP
48-742970	112
48-746831	116
48-751656	113A
48-752497	116
48-822321E07	5283A
48-822321E08	5283AK
48-859248	128
48-859428	128
48-863030	109
48-865539	110MP
48-867716	109
48-869001	102A
48-869087B	104
48-869090	127
48-869092	103
48-869093	103
48-869099B	104
48-869130	100
48-869138	128
48-869141	121
48-869142	121
48-869145	129
48-869148	102
48-869164	108
48-869170	128
48-869177	176
48-869182	121
48-869184	128
48-869197	85
48-869198	102A
48-869202	121
48-869205	179
48-869206	6400
48-869209	128
48-869221	128
48-869225	175
48-869226-0	123AP
48-869228	128
48-869237	121
48-869241	121
48-869244	130
48-869247	186
48-869248	123AP
48-869249	102
48-869250	102
48-869251	105
48-869252	107
48-869253	102
48-869254	103
48-869255	121
48-869256	6401
48-869257	129
48-869259	130
48-869263	128
48-869264	6400
48-869265	198
48-869266	161
48-869269	199
48-869273C	163A
48-869274	175
48-869278	130
48-869279C	162
48-869282	102
48-869283	103
48-869286	198
48-869287	124
48-869293	85
48-869301	175
48-869302	130
48-869306	314
48-869308	129
48-869309	175
48-869312	123AP
48-869316	152
48-869320	198
48-869321	130
48-869325	123AP
48-869328	159
48-869329	123AP
48-869334	159
48-869337	162
48-869338	199
48-869342	121
48-869380	128
48-869384	199
48-869389	289
48-869393	175
48-869400	129
48-869408	162
48-869409	199
48-869412	234
48-869413	159
48-869416	199
48-869426	129
48-869427	179
48-869428	128
48-869432	129
48-869435	129
48-869436	121
48-869444	123AP
48-869447	85
48-869450	161
48-869464	128
48-869465	198
48-869467	234
48-869474	199
48-869475	102
48-869475A	102
48-869476	103
48-869476A	103
48-869480	181
48-869481	161
48-869486	199
48-869491	128
48-869494	108
48-869497	199
48-869515	130
48-869519	128
48-869520	129
48-869521	192
48-869525	123AP
48-869526	159
48-869528	123AP
48-869536	225
48-869539	123AP
48-869543	108
48-869547	199
48-869548	159
48-869550	121
48-869561	128
48-869562	128
48-869563	123AP
48-869568	123AP
48-869570	123AP
48-869571	159
48-869572	123AP
48-869576	152
48-869580	350
48-869582	184
48-869583	320
48-869586	152
48-869587	350
48-869588	347
48-869591	346
48-869594	123AP
48-869599	472
48-869610	175
48-869614	127
48-869616	152
48-869617	152
48-869618	184
48-869619	185
48-869622	353
48-869623	354
48-869624	355
48-869625	356
48-869627	130
48-869628	181
48-869631	346
48-869638	123AP
48-869639	181
48-869640	188
48-869641	189
48-869642	123AP
48-869643	159
48-869645	185
48-869649	159
48-869651	452
48-869652	312
48-869653	451
48-869657	346
48-869660	326
48-869661	152
48-869662	108
48-869663	229
48-869675	123A
48-869676	331
48-869677	197
48-869681	129
48-869687	454
48-869701	197
48-869703	346
48-869703-3	128
48-869718	362
48-869719	363
48-869720	364
48-869728	472
48-869737	362
48-869739	366
48-869740	366
48-869741	366
48-869767	123AP
48-869780	348
48-869787	287
48-869806	185
48-869807	184
48-869851	366
48-869860	350
48-869867	346
48-869874	366
48-869875	481
48-869876	483
48-869877	484
48-1370893	185
48-4416160U01	85
48-8690468	160
48-K869575	108
48-P02597A	123AP
48-V34816	177
48A40458A06	5072A
48A40516C02	614
48A41508A01	116
48A41508A02	116
48A42383A01	614
48A62692A01	109
48A124315	102
48A124327	102
48AA0516C02	614
48B41226G01	506
48B41266G01	506
48B41768G01	109
48B41768G02	109
48B43265G01	116
48B62334A01	109
48B63494A01	614
48B63494H01	614
48B66629A01	109
48B66629A02	109
48B66629A03	116
48B66629A05	116
48B67020A11	109
48B90158A01	5804
48B407624P1	123AP
48C40235C01	116
48C40235G01	116
48C40235G02	506
48C40235G1	116
48C40524A02	177
48C42428A01	109
48C61074B01	109
48C61767B01	109
48C65832A02	109
48C65837A01	109
48C65837A02	109
48C66037A03	116
48C66037A04	116
48C66037A05	116
48C66037A10	116
48C66037A12	116
48C66629A02	116
48C66653A02	116
48C66653A02#	120
48C67120A01	109
48C67120A02	177
48C67120A05	116
48C67926A01	116
48C125233	103
48C125235	103
48C125236	103
48C125237	126
48C134587	109
48C134816	177
48C134840	107
48C666534A02	120
48C674970	112
48C742970	112
48C751656	113A
48C-40235-602	116
48C-66653A-001	120
48D67	177
48D6653APT.005	118
48D8375D02	5455
48D60154A01	109
48D63590A01	109
48D66037A03	116
48D66037A04	116
48D66037A05	116
48D66037A08	116
48D66653-APT.00	118
48D66653A02	120
48D66653A-PT.001	120
48D66653A-PT.005	118
48D66653APT001	120
48D66653APT003	118
48D66653APT005	118
48D66653APT015	118
48D66653APT.005	118
48D66654A02	116
48D67120A01	116
48D67120A02	116
48D67120A02#	116
48D67120A05	116
48D67120A06	116
48D67120A07	116
48D67120A011	123AP
48D67120A11	109
48D67120A11(DIODE)	109
48D67120A11(TRANS)	123AP
48D67120A13	177
48D67120A13(C)	177
48D67120AB	552
48D67120H02	116
48D69723A01	513
48D69723A02	513
48D69723A02-185	513
48D82420C01	177
48D82420C02	177
48D82420C03	519
48D82420C04	519
48D82420C05	177
48D83875D01	5454
48D83875D03	5543
48D83875D06	5455
48D90068A01	120
48D90210A01	109
48DL7120A02	178MP
48G10346A01	109
48G10346A02	177
48G13001A01	124
48K35P1	126
48K36P1	126
48K36P3	126
48K39P1	104
48K43P3	126
48K43P4	126
48K45N2	103
48K56P1	102
48K57B2	104
48K57B42	104
48K64169	116
48K125230	104
48K134450	102
48K134458	102
48K134482	102
48K134483	102
48K134494	160
48K134495	160
48K134496	160
48K134583	121
48K134584	121
48K134587	109
48K134601	160
48K134796	160
48K134798	160
48K544539	109
48K640675	109
48K644681	109
48K646594	116
48K646954	116
48K647311	109
48K647713	109
48K647769	109
48K647829	116
48K741255	113A
48K746831	116
48K752297	116
48K752497	116
48K863030	109
48K867716	109
48K869001	100
48K869228	128
48K869269	199

PART NUMBER	NTE REPLACEMENT
48K869293	199
48K869309	175
48K869342	121
48K869409	199
48K869447	199
48K869474	199
48K869486	199
48K869515	130
48M355002	123AP
48M355004	229
48M355005	198
48M355006	294
48M355007	106
48M355008	109
48M355009	109
48M355012	154
48M355013	506
48M355014	177
48M355016	116
48M355021	125
48M355023	116
48M355025	116
48M355029	5404
48M355035	177
48M355037	192
48M355038	198
48M355039	186
48M355040	152
48M355041	130
48M355042	175
48M355043	238
48M355044	198
48M355045	116
48M355046	116
48M355047	504
48M355048	116
48M355049	116
48M355050	5082A
48M355051	162
48M355052	123AP
48M355053	123AP
48M355054	171
48M355055	187
48M355056	198
48M355057	157
48M355058	288
48M355059	152
48M355062	5074A
48NSP1035	121
48P1	102A
48P60022A97	109
48P60022A98	614
48P60077A06	109
48P63005A72	123AP
48P63006A56	109
48P63076A81	123AP
48P63076A82	123AP
48P63077A03	102
48P63077A11	109
48P63077A31	123AP
48P63077A32	109
48P63077A52	109
48P63078A52	123AP
48P63078A62	102
48P63078A69	107
48P63078A70	123AP
48P63078A71	123AP
48P63078A86(NPN)	103
48P63078A86(PNP)	102
48P63079A97	123AP
48P63082A24	123AP
48P63082A25	123AP
48P63082A26	123AP
48P63082A27	128
48P63082A45	108
48P63082A71	108
48P63086A18	123AP
48P64978A27	160
48P64978A28	160
48P64978A29	160
48P65112A65	123AP
48P65112A73	112
48P65113A88	123AP
48P65118A64	123AP
48P65123A67	107
48P65123A95	107
48P65144A72	107
48P65146A61	107
48P65146A62	107
48P65146A63	108
48P65148A02	611
48P65173A78	108
48P65174A24	161
48P65175A12	171
48P65193A55	112
48P65193A56	107
48P65194A92	107
48P217241	181
48P232796	181
48P-2A5	102A
48Q134722	121
48R2	5866
48R25	5866
48R10001-A030-1	116
48R10001-A01	116
48R10001-A03	116
48R10062A01	116
48R10062A02	116
48R10062A04	116
48R10062A05	116
48R10073A02	126
48R10074A02	126
48R100620A02	116
48R100620A04	116
48R100620A05	116
48R134407	102
48R134545	160
48R134573	102
48R134582	121
48R134587	109
48R134606	121
48R134621	102A
48R134632	102A
48R134665	103
48R134666	128
48R134671	116
48R134722	104
48R660370A05	116
48R859428	128
48R869090	127
48R869092	103
48R869093	103
48R869138	128
48R869141	121
48R869142	121
48R869145	129
48R869148	102
48R869170	128
48R869197	199
48R869202	121
48R869205	121
48R869206	6400
48R869209	128
48R869225	175
48R869241	121
48R869244	130
48R869248	123AP
48R869249	102
48R869250	102
48R869251	105
48R869253	102
48R869254	103
48R869255	121
48R869256	6401
48R869257	129
48R869264	6400
48R869282	102
48R869283	103
48R869301	175
48R869302	130
48R869306	314
48R869312	123AP
48R869321	130
48R869325	123AP
48R869329	123AP
48R869334	159
48R869338	199
48R869384	199
48R869389	289
48R869412	234
48R869413	159
48R869416	199
48R869426	106
48R869432	129
48R869436	121
48R869444	123AP
48R869464	128
48R869467	234
48R869475	102
48R869475A	102
48R869476	103
48R869476A	103
48R869491	128
48R869519	128
48R869520	129
48R869521	192
48R869525	123AP
48R869526	159
48R869547	199
48R869550	121
48R869562	128
48R869563	123AP
48R869568	123AP
48R869570	123AP
48R869571	159
48R869582	185
48R869594	199
48R869599	311
48R869618	184
48R869640	188
48R869641	189
48R869649	159
48R869676	196
48R869732	189
48R869767	123AP
48R969681	129
48S00151131	605A
48S00155035	290A
48S00155060	519
48S00155077	519
48S00155093	85
48S00155114	109
48S00155137	552
48S00155138	116
48S00155144	615P
48S00155146	5013A
48S00155177	116
48S00155222	399
48S00155284	290A
48S00155334	519
48S00155343	19
48S00155365	85
48S00155400	85
48S00355052	229
48S01155403	85
48S50	218
48S191A02	116
48S191A04	116
48S191A04(A)	116
48S191A05	116
48S191A05A	506
48S191A06	116
48S191A07	116
48S191A08	116
48S1784J04	184
48S10062A01	116
48S10062A02	116
48S10062A05	116
48S10062A05A	116
48S10346A02	109
48S10577A01	177
48S10577A02	177
48S10577A04	506
48S10577A11	177
48S10577A13	177
48S10641D62	137A
48S13270	131
48S14873J01	5072A
48S32000	142A
48S40170G01	199
48S40171G01	128
48S40172G01	131
48S40235G02	116
48S40241G01	199
48S40246G01	123AP
48S40247G01	199
48S40247G02	123AP
48S40382J01	186
48S40383J01	187
48S40606G01	123AP
48S40606G02	199
48S40606J02	199
48S40607G01	199
48S40607J01	199
48S40662G04	152
48S41508A01	116
48S41784J03	184
48S43240G01	152
48S43241G01	152
48S43991J01	108
48S43992J01	108
48S44657G01	1022
48S44883G01	152
48S44884G01	153
48S44885G01	123AP
48S44885G02	123AP
48S44886G01	128
48S44887G01	177
48S65123A67	107
48S67120A11	506
48S67120A13	177
48S90158A01	5804
48S90233A01	109
48S90233A02	109
48S90233A04	116
48S90233A06	109
48S90233A07	142A
48S90233A08	109
48S90234A02	116
48S90234A03	120
48S90235A09	605A
48S90478A30	5010A
48S97048A04	5804
48S97127A01	168
48S97168A01	109
48S97168A04	109
48S97168A07	109
48S97172A01	5804
48S97305A02	136A
48S97305A03	5804
48S134404	102
48S134405	160
48S134406	160
48S134407	160
48S134408	102
48S134458	126
48S134587	109
48S134666	123AP
48S134695	121
48S134718	123AP
48S134719	123AP
48S134720	123AP
48S134721	123AP
48S134732	123AP
48S134733	123AP
48S134733A	123AP
48S134734	123AP
48S134734A	123AP
48S134736	116
48S134737	123AP
48S134739	124
48S134739A	124
48S134746	121
48S134747	104
48S134751	104
48S134756	107
48S134758	121
48S134759	104
48S134760	121
48S134761	104MP
48S134765	123AP
48S134766	121
48S134767	121
48S134768	128
48S134773	123AP
48S134774	123AP
48S134775	123AP
48S134776	123AP
48S134783	123AP
48S134784	123AP
48S134785	123AP
48S134789	123AP
48S134790	116
48S134797	123AP
48S134804	123AP
48S134805	123AP
48S134807	123AP
48S134809	123AP
48S134810	123AP
48S134811	123AP
48S134814	159
48S134815	159
48S134816	177
48S134820	123AP
48S134821	106
48S134823	123AP
48S134825	123AP
48S134826	123AP
48S134827	123AP
48S134830	159
48S134831	159
48S134832	159
48S134837	123AP
48S134838	123AP
48S134840	123AP
48S134841	123AP
48S134842	123AP
48S134843	171
48S134844	123AP
48S134845	123AP
48S134846	123AP
48S134850	142A
48S134851	139A
48S134853	128
48S134854	123AP
48S134855	123AP
48S134857	123AP
48S134858	147A
48S134860	100
48S134861	100
48S134862	100
48S134872	124
48S134879	123AP
48S134888	121
48S134889	123AP
48S134894	123AP
48S134898	123AP
48S134899	123AP
48S134900	163A
48S134901	163A
48S134902	108
48S134903	123AP
48S134904	123AP
48S134905	123AP
48S134906	123AP
48S134908	123AP
48S134909	106
48S134910	106
48S134912	5072A
48S134913	159
48S134915	159
48S134916	113A
48S134917	178MP
48S134918	123AP
48S134919	154
48S134920	124
48S134921	116
48S134922	123AP
48S134923	123AP
48S134924	123AP
48S134925	123AP
48S134926	123AP
48S134927	123AP
48S134932	161
48S134933	123AP
48S134934	127
48S134935	128
48S134936	196
48S134937	123AP
48S134938	127
48S134939	116
48S134941	123AP
48S134942	128
48S134943	159
48S134944	132
48S134945(A2C	123AP
48S134945(A2C)	123AP
48S134946	108
48S134947	104
48S134948	123AP
48S134949	123AP
48S134950	123AP
48S134952	123AP
48S134953	128
48S134954	109
48S134956	160
48S134957	139A
48S134958	116
48S134959	116
48S134960	108
48S134961	123AP
48S134962	123AP
48S134963	123AP
48S134964	123AP
48S134970	108
48S134972	124
48S134974	104
48S134979	108
48S134981	161
48S134988	192
48S134989	193
48S134990	116
48S134992	123AP
48S134995	163A
48S134997	123AP
48S134998	124
48S137000	142A
48S137001	127
48S137002	171
48S137003	123AP
48S137006	108
48S137006(A3S)	123AP
48S137007	192
48S137014	128
48S137015	199
48S137017	145A
48S137021	5072A
48S137021(10)	5072A
48S137022	128
48S137029	116
48S137031	121
48S137032	159
48S137033	123AP
48S137034	146A
48S137040	116
48S137041	128
48S137044	123AP
48S137045	106
48S137047	128
48S137055	123AP
48S137056	123AP
48S137057	123AP
48S137063	147A
48S137070	312
48S137074	116
48S137082	503
48S137093	186
48S137101	109
48S137106	128
48S137107	123AP
48S137108	123AP
48S137109	123AP
48S137110	123AP
48S137111	123AP
48S137113	171
48S137114	505
48S137115	123AP
48S137127	159
48S137133	177
48S137134	163A
48S137145	186
48S137158	107
48S137160	189
48S137164	139A
48S137167	178MP
48S137168	189
48S137169	188
48S137170	136A
48S137171	123AP
48S137171(D)	123AP
48S137172	123AP
48S137173	159
48S137174	128
48S137190	123AP
48S137191	123AP
48S137192	123AP
48S137203	163A
48S137206	128
48S137207	124
48S137208	116
48S137260	123AP
48S137266	147A
48S137270	131
48S137272	147A
48S137281	5404
48S137299	109
48S137300	123AP
48S137308	226
48S137309	152
48S137310	153
48S137311	152
48S137312	153
48S137314	159
48S137315	123AP
48S137317	123AP
48S137321	159
48S137323	196
48S137330	145A
48S137331	187
48S137341	165
48S137342	127
48S137343	312
48S137344	130
48S137347	116
48S137348	116
48S137350	123AP
48S137351	123AP
48S137364	191
48S137364(H)	154
48S137369	152
48S137370	153
48S137386	194
48S137387	137A
48S137389	5081A
48S137397	513
48S137415	171
48S137415(I)	154
48S137442	5080A
48S137472	187
48S137473	186
48S137476	123AP
48S137495	109
48S137498	123AP
48S137512	123AP
48S137524	163A
48S137528	124
48S137530	123AP
48S137533	506
48S137535	124
48S137539	163A
48S137543	123AP
48S137546	506
48S137548	162
48S137551	506
48S137572	188
48S137855	123AP
48S155001	165
48S155005	175
48S155006	154
48S155013	152
48S155014	153
48S155034	198
48S155035	290
48S155037	116
48S155039	109
48S155040	116
48S155041	116
48S155042	186A
48S155043	198
48S155044	175
48S155044(15)	124
48S155045	234
48S155046	297
48S155047	519
48S155048	5074A
48S155050	5404
48S155051	157
48S155052	601
48S155053	181
48S155054	140A
48S155054(ZENER)	140A
48S155056	506
48S155058	238
48S155059	198
48S155060	519
48S155061	109
48S155062	152
48S155063	116
48S155065	290A
48S155066	153
48S155067	130
48S155068	5633
48S155069	198
48S155070	198
48S155072	198
48S155073	85
48S155074	186A
48S155076	165
48S155077	519
48S155078	109
48S155079	116
48S155080	5012A
48S155081	5074A
48S155083	125
48S155084	5074A
48S155085	125
48S155087	123AP
48S155087(SCR)	5404
48S155088	123AP
48S155089	199
48S155090	238
48S155091	291
48S155092	5404
48S155093	85
48S155094	85
48S155095	106
48S155096	198
48S155099	116
48S155100	116
48S155103	142A
48S155104	145A
48S155105	162
48S155106	116
48S155107	552
48S155108	552
48S155110	198
48S155111	186A
48S155114	109
48S155116	187
48S155117	123AP
48S155118	283
48S155121	293
48S155122	294
48S155123	192
48S155126	116
48S155127	5069A
48S155131	605A
48S155137	552
48S155141	85
48S155144	615P
48S155150	289A
48S155153	519
48S155160	519
48S155171	85
48S155177	552
48S155180	5092A
48S155183	519
48S155189	165
48S155193	116
48S155195	552
48S155199	5013A
48S155207	5010A
48S155213	376
48S155222	399
48S155223	552
48S155224	165
48S155225	137A
48S155238	116
48S155239	116
48S155241	247
48S155258	519
48S155259	376
48S155275	6402
48S155279	605A
48S155280	5010T1
48S155281	5012A
48S155282	5014A
48S155284	290A
48S155285	290A
48S155286	377
48S155287	290A
48S155289	525
48S155292	116
48S155293	85
48S155293(BCE)	85
48S155294	290A
48S155296	552
48S155302	198
48S155305	198
48S155307	85
48S155310	125
48S155311	5071A
48S155312	5074A
48S155317	140A
48S155320	85
48S155323	5019A
48S155324	125
48S155325	5016A
48S155333	375
48S155334	519
48S155337	377
48S155343	290A
48S155376	116
48S155378	5030A
48S155380	290A
48S155382	261
48S155387	5025A
48S317113	154
48S317476	154
48S455275	6402
48S623334A01	109
48S1552132	376
48SP134804	123AP
48SP134826	107
48SP134837	107
48SP134855	123AP
48SP134857	107
48SP134894	123AP
48SP134897	123AP
48SP134903	123AP
48SP134904	107
48SP134905	123AP
48SP134906	123AP
48SP134933	123AP
48SP134937	107
48ST-2SD870	89
48T40059U06	5012A
48T40059U34	5020A
48T40477U01	116
48T40627U01	85
48T40627U02	85
48T42182U01	199
48T44160U01	85
48T44160U02	85
48X00155334	519
48X90380A03	375
48X90380A04	159
48X9038SA05	552
48X9042DA86	116
48X9271A03	102
48X90223A02	289A
48X90223A03	5012A
48X90229A02	85
48X90229A04	399
48X90229A06	293
48X90229A07	328
48X90229A15	90
48X90229A18	290A
48X90229A19	290A
48X90229A20	289A
48X90229A36	5020A
48X90229A45	290A
48X90229A47	261
48X90229A48	262
48X90229A52	290A
48X90229A56	18
48X90229A58	5020A
48X90229A59	5004A
48X90229A61	185
48X90229A66	55
48X90229A67	5022A
48X90229A68	5022A
48X90229A69	290A
48X90229A70	5008A
48X90229A73	116
48X90229A74	5019A
48X90229A75	5019A
48X90229A76	519
48X90229A77	519
48X90229A78	5019A
48X90229A79	5077A
48X90229A80	5014A
48X90229A81	5016A
48X90229A82	552
48X90229A83	184
48X90229A84	373
48X90229A85	85
48X90229A86	116
48X90229A87	5077A
48X90229A91	184
48X90229A93	91
48X90229A94	90
48X90229A95	5012A
48X90229A97	15
48X90229A98	5004A
48X90232A01	123AP
48X90232A02	123AP
48X90232A03	123AP

PART NUMBER	NTE REPLACEMENT
48X90232A04	123AP
48X90232A05	128
48X90232A06	106
48X90232A07	128
48X90232A08	123AP
48X90232A09	106
48X90232A10	123AP
48X90232A11	123AP
48X90232A12	106
48X90232A13	123AP
48X90232A14	133
48X90232A15	106
48X90232A16	124
48X90232A17	107
48X90232A18	107
48X90232A19	107
48X90232A20	107
48X90232A40	85
48X90232A47	56
48X90232A68	5013A
48X90232A69	5013A
48X90232A72	5024A
48X90232A74	5015A
48X90232A75	55
48X90232A83	519
48X90232A84	137A
48X90232A89	5024A
48X90232A91	5031A
48X90232A92	5016A
48X90232A93	142A
48X90232A94	125
48X90232A95	552
48X90232A96	5010A
48X90232A97	5002A
48X90232A98	5030A
48X90232A99	399
48X90233A01	109
48X90233A02	109
48X90233A04	116
48X90233A05	112
48X90233A06	109
48X90233A07	142A
48X90233A08	614
48X90233A39	5022A
48X90233A40	290A
48X90233A41	5011A
48X90233A42	290A
48X90233A50	5010A
48X90233A53	109
48X90233A67	112
48X90234A01	116
48X90234A02	116
48X90234A03	116
48X90234A05	503
48X90234A66	112
48X90234A67	519
48X90235A01	113A
48X90235A05	5018A
48X90235A09	605A
48X90235A70	382
48X90235A72	519
48X90237A18	85
48X90237A19	289A
48X90237A20	289A
48X90237A62	125
48X90237A63	5015A
48X90237A64	5014A
48X90237A65	5021A
48X90237A66	177
48X90288A45	552
48X90343A39	5013A
48X90343A83	289A
48X90343A85	373
48X90380A03	375
48X90380A04	159
48X90380A30	5024A
48X90380A46	605A
48X90380A74	85
48X90380A76	290A
48X90380A77	294
48X90380A78	85
48X90380A80	85
48X90380A85	5018A
48X90380A86	125
48X90420A01	16
48X90420A24	85
48X90420A28	290A
48X90420A29	19
48X90420A31	107
48X90420A42	19
48X90420A53	605A
48X90420A56	377
48X90420A74	198
48X90420A85	116
48X90420A86	552
48X90420A90	238
48X90420A92	157
48X90420A98	552
48X90432A01	289A
48X90432A14	290A
48X90432A15	116
48X90432A32	85
48X90432A34	85
48X90432A35	85
48X90432A36	289A
48X90432A37	199
48X90432A41	5024A
48X90432A42	5011A
48X90432A54	290A
48X90432A55	290A
48X90432A57	85
48X90445A11	85
48X90445A17	85
48X90445A51	5020A
48X90445A52	5020A
48X90445A63	152
48X90445A79	615P
48X90445A91	289A
48X90445A93	253
48X90445A94	5025A
48X90445A96	116
48X90445A97	615P
48X90456A07	294
48X90456A11	85
48X90456A12	199
48X90456A15	116
48X90456A16	5011A
48X90456A24	519
48X90456A32	152
48X90456A35	85
48X90456A47	85
48X90456A54	293
48X90456A70	558
48X90456A71	5021A
48X90456A72	519
48X90456A73	5009A
48X90456A75	198
48X90456A76	184
48X90456A77	389
48X90456A80	5029A
48X90478A04	85
48X90478A10	552
48X90478A12	5013A
48X90478A15	391
48X90478A16	391
48X90478A17	242
48X90478A18	91
48X90478A20	261
48X90478A21	289
48X90478A22	261
48X90478A23	377
48X90478A24	90
48X90478A26	5313
48X90478A27	125
48X90478A28	125
48X90478A29	5022A
48X90478A30	5010A
48X90478A41	5025A
48X90478A45	290A
48X90478A46	294
48X90478A47	19
48X90478A48	85
48X90478A51	373
48X90478A52	16
48X90478A53	16
48X90478A54	289A
48X90478A55	152
48X90478A56	241
48X90478A57	116
48X90478A60	116
48X90478A61	5010A
48X90478A65	375
48X90478A68	16
48X90478A69	85
48X90478A70	605A
48X90478A71	5010A
48X90478A72	5014A
48X90478A73	5015A
48X90478A75	552
48X90478A76	5016A
48X90478A77	5029A
48X90478A78	5020A
48X90478A94	294
48X90488A01	519
48X90488A44	5025A
48X90488A45	552
48X90488A47	116
48X90488A49	399
48X90488A50	184
48X90488A51	389
48X90488A74	19
48X97046A15	131
48X97046A16	160
48X97046A17	123AP
48X97046A18	123AP
48X97046A19	123AP
48X97046A20	123AP
48X97046A21	123AP
48X97046A22	123AP
48X97046A23	123AP
48X97046A24	128
48X97046A25	123AP
48X97046A31	131
48X97046A32	105
48X97046A34	102
48X97046A36	193
48X97046A48	158
48X97046A50	123AP
48X97046A51	108
48X97046A52	128
48X97046A53	102A
48X97046A54	102A
48X97046A55	102A
48X97046A60	123AP
48X97046A61	123AP
48X97046A62	123AP
48X97048A02	109
48X97048A04	116
48X97048A05	109
48X97048A06	109
48X97048A07	116
48X97048A08	142A
48X97048A09	614
48X97048A10	116
48X97048A18	123AP
48X97048A19	109
48X97127A01	116
48X97127A05	102
48X97127A22	102
48X97162A01	108
48X97162A02	108
48X97162A03	160
48X97162A04	108
48X97162A05	123AP
48X97162A06	102A
48X97162A07	102A
48X97162A09	108
48X97162A10	108
48X97162A17	102
48X97162A19	102
48X97162A21	123AP
48X97162A36	158
48X97162A37	158
48X97168A01	109
48X97168A02	614
48X97168A03	109
48X97168A04	109
48X97168A06	116
48X97168A07	109
48X97168A10	116
48X97168A11	614
48X97168A16	116
48X97172A01	116
48X97177A03	123AP
48X97177A10	188
48X97177A11	189
48X97177A12	128
48X97177A13	123AP
48X97177A14	106
48X97177A15	109
48X97177H01	133
48X97221A01	102
48X97221A02	160
48X97221A03	102
48X97221A04	102
48X97221A05	102
48X97222A01	109
48X97222A02	116
48X97238A01	126
48X97238A02	126
48X97238A03	126
48X97238A04	123AP
48X97238A05	102
48X97238A06	131MP
48X97239A01	109
48X97271A01	116
48X97271A02	109
48X97271A03	102
48X97305A02	136A
48X97305A03	5307
48X134902	107
48X134970	123AP
48X155320	85
48X355052	229
48X644681	109
48X9038047	5011A
48X90420429	290A
49-1	108
49-1042	116
49-3112	116
49-61963	5444
49-62139	128
49A0000	7475
49A0002-000	7473
49A0005-000	7410
49A0006-000	7420
49A0010	9944
49A0012-000	7474
49A0103-001	923
49A0510	9944
49L-4A5	102A
49P1C	121
49RECT-S1-154	552
49RECT-SI-154	552
49S1	177
49ST-2SC1213D-24	289A
49X90232A05	123AP
49X90478A50	196
50-30307-07	294
50-30702-06	290A
50-30702-07	290A
50-30715-06	290A
50-30715-07	290A
50-30715-08	290A
50-30718-07	294
50-30727-05	398
50-30737-07	32
50-40101-04	108
50-40101-05	108
50-40102-04	123AP
50-40102-05	319P
50-40105-08	123AP
50-40106-09	106
50-40201-08	123AP
50-40201-09	123AP
50-40201-10	123AP
50-40204-10	106
50-40205-09	159
50-40301-02	389
50-40306-07	293
50-40708-06	85
50-40708-07	85
50-40708-09	85
50-40711-06	399
50-40711-07	399
50-40724-03	89
50-40725-06	229
50-40726-05	375
50-40727-08	399
50-40733-04	399
50-40734-08	94
50-40735-07	31
50-40741-12	56
50-40743-01	2302
50-41001-01	389
50-41302-01	165
50-50704-11	459
50A	116
50A52	126
50A102	126
50A103	129
50A103K	126
50A-5-S001	931
50A-5-S001(STERN)	931
50AS	116
50B5	116
50B54	102A
50B173-C	102A
50B173-S	102A
50B173C	102
50B175-B	100
50B175A	102A
50B175B	102A
50B175C	102A
50B324	158
50B364	158
50B415	158
50B423	102A
50BU75-C	102A
50C	116
50C05	6020
50C05R	6021
50C10	6022
50C10R	6023
50C20	6026
50C20R	6027
50C30	6030
50C30R	6031
50C40	6034
50C40R	6035
50C50	6038
50C50R	6039
50C60	6040
50C60R	6041
50C70	6042
50C70R	6043
50C80	6042
50C80R	6043
50C90	6044
50C90R	6045
50C100	6044
50C100R	6045
50C371	123AP
50C372	123AP
50C373	123AP
50C374	123AP
50C380-0	107
50C380-0R	107
50C380-0R	107
50C394-0	107
50C394-R	107
50C401	130
50C538	123AP
50C644	123AP
50C784	108
50C784-R	107
50C828	123AP
50C829	108
50C829B	108
50C829C	108
50C838	123AP
50C1047	108
50CJ139	123AP
50D2	116
50D4	116
50D8	125
50D10	125
50E05	116
50E1	116
50E2	116
50E3	116
50E4	116
50E5	116
50E6	116
50E7	125
50E8	125
50E10	125
50F1	5840
50F5	5860
50H3P	5860
50H3PN	5861
50HQ020	6094
50HQ030	6094
50HQ040	6094
50HQ035	6094
50HQ045	6094
50J1	5805
50J2P	5880
50J3P	5880
50JH3	6064
50M	116
50M24Z5	5137A
50M33Z5	5142A
50M62Z5	5150A
50P2	126
50P3	126
50R1A10	5567
50R1A20	5567
50R1A20C20	5567
50R1A40	5568
50R1A60	5568
50R1A60C60	5568
50R1A80	5569
50R1A100	5569
50R1A110	5569
50R1A120	5569
50R2S	5868
50RIA10	5567
50RIA20	5567
50RIA40	5568
50RIA60	5568
50RIA80	5569
50RIA100	5569
50RIA110	5569
50RIA120	5569
50RIA120C120	5569
50S5	5840
50SI-HA11446	1650
50ST-2SC945R	85
50ST-2SD467B	85
50SZ-HZ12A2	5021A
50T6.8	5247A
50T6.8A	5247A
50T6.8B	5247A
50T7.5	5248A
50T7.5A	5248A
50T7.5B	5248A
50T8.2	5249A
50T8.2A	5249A
50T8.2B	5249A
50T9.1	5251A
50T9.1A	5251A
50T9.1B	5251A
50T10	5252A
50T10A	5252A
50T10B	5252A
50T11	5253A
50T11A	5253A
50T11B	5253A
50T12	5254A
50T12A	5254A
50T12B	5254A
50T13	5255A
50T13A	5255A
50T13B	5255A
50T15	5257A
50T15A	5257A
50T15B	5257A
50T16	5258A
50T16A	5258A
50T16B	5258A
50T18	5260A
50T18A	5260A
50T18B	5260A
50T20	5262A
50T20A	5262A
50T20B	5262A
50T22	5263A
50T22A	5263A
50T22B	5263A
50T24	5264A
50T24A	5264A
50T24B	5264A
50T30	5268A
50T30A	5268A
50T30B	5268A
50T33	5269A
50T33A	5269A
50T33B	5269A
50T36	5270A
50T36A	5270A
50T36B	5270A
50T39	5271A
50T39A	5271A
50T39B	5271A
50T43	5272A
50T43A	5272A
50T43B	5272A
50T47	5274A
50T47A	5274A
50T47B	5274A
50T51	5276A
50T51A	5276A
50T51B	5276A
50T68	5281A
50T68A	5281A
50T68B	5281A
50T75	5282A
50T75A	5282A
50T75B	5282A
50T82	5283A
50T82A	5283A
50T82B	5283A
50T91	5284A
50T91A	5284A
50T91B	5284A
50T100	5285A
50T100A	5285A
50T100B	5285A
50T110	5287A
50T110A	5287A
50T110B	5287A
50T120	5288A
50T120A	5288A
50T120B	5288A
50T130	5289A
50T130A	5289A
50T130B	5289A
50T150	5291A
50T150A	5291A
50T160	5292A
50T160A	5292A
50T160B	5292A
50T180	5294A
50T180A	5294A
50T180B	5294A
50T200	5296A
50T200A	5296A
50T200B	5296A
50Z9.1	139A
50Z9.1A	139A
50Z9.1B	139A
50Z9.1C	139A
50Z11	141A
50Z11A	141A
50Z11B	141A
50Z11C	141A
50Z12	142A
50Z12A	142A
50Z12B	142A
50Z12C	142A
50Z14	144A
50Z14A	144A
50Z14B	144A
50Z14C	144A
50Z15	145A
50Z15A	145A
50Z15B	145A
50Z15C	145A
50Z27	146A
50Z27A	146A
50Z27B	146A
50Z27C	146A
50Z33	147A
50Z33A	147A
50Z33B	147A
50Z33C	147A
50Z56	149A
50Z56A	149A
50Z56B	149A
50Z56C	149A
50Z62	149A
50Z62A	149A
50Z62B	149A
50Z62C	149A
50Z82	150A
50Z82A	150A
50Z82B	150A
50Z82C	150A
50Z110	151A
50Z110A	151A
50Z110B	151A
50Z110C	151A
51	108
51-04001-01	109
51-08001-05	519
51-08001-11	519
51-06002-00	614
51-01003-04	177
51-08004-06	519
51-02004-12	5010A
51-08006-02	519
51-02006-12	5072A
51-03007-06	116
51-02007-12	139A
51-03020-02	552
51-03030-04	552
51-03015-02	116
51-03017-01	116
51-03021-02	552
51-0022-00	709
51-03024-02	552
51-03025-04	519
51-02025-04	5012A
51-03026-04	116
51-03029-04	552
51-02029-04	142A
51-02032-04	5015A
51-03035-04	156
51-04488D03	727
51-4	157
51-13-14	177
51-47-20	128
51-47-21	159
51-47-23	123AP
51-47-24	123AP
51-47-28	519
51-47-34	234
51-1056FA01	722
51-1056GA01	722
51-1059A01	723
51-9045A15	4503B
51-10276A01	704
51-10302A01	703
51-10302A1	703
51-10382A01	722
51-10541A01	917
51-10559A01	722
51-10566A01	722
51-10592A01	722
51-10594A01	723
51-10594C01	723
51-10611A09	760
51-10611A11	7400
51-10611A12	7404
51-10611A15	7450
51-10611A16	7475
51-10619A01	723
51-10631A01	708
51-10638A01	789
51-10655A05	749
51-10655A17	4001B
51-10655A19	4013B
51-10655A21	4016B
51-10655C05	749
51-10658A01	788
51-10658A02	788
51-10658A03	788
51-10672A	736
51-10672A01	736
51-10678A01	789
51-10711A01	743
51-10715A01	941M
51-13753-A19	797
51-13753A11	712
51-13753A12	4511B
51-13753A13	834
51-13753A19	797
51-13753A20	1176
51-13753A25	1485
51-13753A28	1410
51-13753A33	4042B
51-13753A39	1440
51-13753A40	1231
51-13753A41	834
51-13753A43	4511B
51-25789H	909
51-33801A01	712
51-40113T01	2003
51-40114T01	2004
51-40167F01	4011B
51-40167F02	4011B
51-40242T01	4011B
51-40243T01	4001B
51-40464P01	801
51-42211P01	1170
51-42908J01	801
51-44774P01	1290
51-44789J01	1234
51-44789J02	1234
51-70177A03	738
51-70177A05	749
51-82822F03	4001B
51-82822F06	4511B
51-82822F08	4011B
51-82822F11	4015B
51-82822F18	4070B
51-82822F23	4027B
51-82822F34	4520B
51-82822F40	4049
51-84320A12	778A
51-84320A13	941M
51-84320A16	912
51-84320A32	916
51-84320A51	834
51-84795G24	9944
51-84805E0	7400
51-84805E02	7404
51-84805E04	7410
51-84805E05	7420
51-84805E09	7490
51-84805E14	7402
51-84805E16	7408
51-84805E25	7475
51-90305A09	615P
51-90305A6	712
51-90305A20	1123
51-90305A21	1263
51-90305A24	1266
51-90305A26	1268
51-90305A27	1269
51-90305A50	749
51-90305A60	1060
51-90305A61	712
51-90305A67	1408
51-90305A78	1248
51-90305A90	749
51-90433A07	1402
51-90433A10	4050B
51-90433A11	4050B
51-90433A12	9403
51-90433A13	4016B
51-90433A32	1428
51-90433A33	1400
51-90433A35	1419
51-90433A66	1187
51-90458A01	1422
51-90458A02	5022A
51-90458A08	4001B
51-90458A14	4081B
51-110276A01	704
51A180-4	161
51A524004-01	941D
51D170	102
51D176	102A
51D188	100
51D189	100
51D70177A02(C)	1045
51D70177A03	738
51D70177A07	712
51G10679A03	738
51GX3	120
51GX14	120
51HQ045	6094
51HQ045	6094
51IN60P	109
51IS34S	109
51LN60P	109
51LS34S	109
51M33801A01	1045
51M70177A03	738
51M70177A05	749
51N3M	180
51P2	126
51P4	126
51R04488D03	727
51R84320A03	912
51R84320A05	912
51R84320A16	912
51R84320A32	916
51S1S34	109
51S137A50	986
51S1048A01	712
51S1056FA01	722
51S1056GA01	722
51S1059A01	722
51S1373A40	1231
51S1375A47	984

PART NUMBER	NTE REPLACEMENT
51S10072A01	736
51S10276A01	704
51S10302A01	703
51S10536A01	912
51S10541A01	917
51S10553A01	917
51S10559A	722
51S10559A01	722
51S10566A01	722
51S10566A02	722
51S10592A01	722
51S10594A01	723
51S10600A01	7404
51S10611A09	760
51S10611A11	7400
51S10611A12	7404
51S10611A15	7450
51S10611A16	7475
51S10619A01	723
51S10631A01	708
51S10638A01	789
51S10655A03	738
51S10655A03A	738
51S10655A05	749
51S10655A17	4001B
51S10655A18	4011B
51S10655A19	4013B
51S10655B03	738
51S10655C05	749
51S10658A01	788
51S10672A	736
51S10672A01	736
51S10711A01	743
51S10715A01	941M
51S13749A46	1174
51S13753A09	712
51S13753A11	1045
51S13753A12	4511B
51S13753A13	834
51S13753A33	4042B
51S13753A37	1682
51S13753A39	1440
51S13753A40	1231
51S13753A41	834
51S13753A43	4511B
51S13753A46	1174
51S13753A47	984
51S13753A50	986
51S13753A52	1548
51S13753A64	986
51S23753A47	984
51S42211P01	1170
51S44789J01	1234
51S44789J02	1234
51S110276A01	704
51T40113T01	2003
51T40114T01	2004
51T40167F01	4001B
51T40167F02	4011B
51T40242T01	4011B
51T40243T01	4001B
51T44774P01	1290
51X9048A07	960
51X90266A45	928M
51X90305A21	1263
51X90305A61	712
51X90305A88	1615
51X90433A12	9403
51X90433A28	1414
51X90433A33	1400
51X90433A47	1709
51X90433A52	1620
51X90433A53	1607
51X90433A54	1234
51X90433A99	1621
51X90458A01	1422
51X90458A02	1701
51X90458A03	1702
51X90458A04	1703
51X90458A05	15010
51X90458A06	1613
51X90458A07	834
51X90458A09	4011B
51X90458A15	4503B
51X90458A30	1440
51X90458A50	1440
51X90458A51	712
51X90458A56	1427
51X90458A72	1610
51X90458A73	1234
51X90458A80	1625
51X90458A82	1568
51X90458A83	778A
51X90458A84	778A
51X90458A88	4066B
51X90458A90	4528B
51X90458A94	834
51X90458A98	962
51X90478A98	293
51X90480A07	960
51X90480A08	960
51X90480A16	4066B
51X90480A18	4503B
51X90480A20	1409
51X90480A32	1718
51X90480A41	1703
51X90480A46	962
51X90480A64	1551
51X90480A65	1727
51X90480A66	966
51X90480A93	1629
51X90480A96	1674
51X90495A17	7406
51X90495A91	7416
51X90507A20	1234
51X90507A24	962
51X90507A39	928M
51X90507A40	928M
51X90507A46	1689
51X90507A77	1710
51X90507A78	1712
51X90507A80	1713
51X90507A84	4001B
51X90507A85	4071B
51X90507A87	1628
51X90507A92	4015B
51X90507A93	4024B
51X90507A97	4002B
51X90507A98	4012B
51X90507A99	4069
51X90518A07	960
51X90518A08	4040B
51X90518A09	1704
51X90518A19	1711
51X90518A28	4528B
51X90518A34	4503B
51X90518A35	9403
51X90518A36	4011B
51X90518A69	955M
51X90518A71	2079
51Z6	5111A
51Z6A	5111A
52-010-109-0	159
52-020-108-0	123AP
52-020-173-0	299
52-040-009-0	1003
52-040-010-0	1006
52-050-021-0	109
52-051-017-0	109
52-053-005-0	147A
52-053-013-0	139A
52-1	116
52-4	157
52-9	125
52A011	116
52A011-1	125
52A4	177
52A15	109
52A26	137A
52BBIA	116
52BBLA	116
52C04	102A
52D189	158
52DS-18	116
52HQ030	6094
52HQ040	6094
52HQ035	6094
52HQ045	6094
52SD1	116
52SD-1	116
52ST-2SC467C	85
52ST-2SD467C	85
52TA7611AP-S	1413
53-0051-2	116
53-0082-3	125
53-0082-1003	117
53-0086-1	116
53-0088-1	116
53-0088-2	117
53-0088-3	125
53-0088-1002	125
53-0088-1003	125
53-0088-1004	125
53-0094-1	116
53-0095-1	116
53-0098-1	116
53-0099-1	116
53-0099-3	116
53-0099-4	116
53-0106-1	116
53-0106-1001	125
53-0109-1	116
53-0120-1	116
53-0111-1	117
53-0111-1001	125
53-0113-1	116
53-0119-1	503
53-0122-1	117
53-0132-1	118
53-0136T	125
53-0226-1	116
53-1086	116
53-1110	123AP
53-1173	172A
53-1362	186
53-1516	159
53-1517	5455
53-1519	109
53-1967	186
53=ST-2SC2344	375
53A001-1	109
53A001-2	110MP
53A001-3	116
53A001-4	125
53A001-5	5071A
53A001-6	614
53A001-9	116
53A001-10	142A
53A001-12	116
53A001-32	177
53A001-33	144A
53A001-34	125
53A001-35	116
53A001-36	177
53A002-1	116
53A006-1	109
53A008-1	109
53A009-1	113A
53A010-1	116
53A0016	610
53A020-1	177
53A030-1	177
53A0081	109
53A011-1	116
53A014-1	506
53A015-1	506
53A016-1	5096A
53A017-1	506
53A018-1	177
53A019-1	177
53A022-1	116
53A022-2	109
53A022-3	178MP
53A022-4	116
53A022-5	506
53A022-6	139A
53A022-7	139A
53A-1-0137	159
53B001-1	109
53B001-2	109
53B001-3	109
53B001-5	116
53B001-6	116
53B001-7	177
53B001-8	614
53B001-9	177
53B003-1	116
53B003-2	116
53B004-1	109
53B005-2	109
53B006-1	116
53B007-1	109
53B008-1	112
53B010-1	113A
53B010-2	113A
53B010-3	116
53B010-4	116
53B010-5	156
53B010-6	177
53B010-7	110MP
53B010-8	506
53B010-9	507
53B020-2	116
53B020-3	614
53B011-1	116
53B011-2	116
53B011-3	118
53B012-1	165
53B013-1	177
53B014-1	177
53B015-1	138A
53B017-1	174
53B018-1	166
53B019-2	116
53B019-3	113A
53C001	109
53C001-1	109
53C002-1	169
53C003-1	116
53C005-3	116
53C006-1	109
53C006-2	109
53C006-52	109
53C007-1	116
53C008-1	178MP
53C009-1	116
53C009-2	109
53C020-1	109
53C012-1	116
53C013-1	134A
53C014-1	116
53C015-1	116
53C016-1	116
53C017-1	116
53C021-1	169
53C022-1	116
53CD01-1	109
53D001-1	614
53D001-4	177
53D001-7	116
53D001-8	177
53D002-1	109
53D002-2	109
53D003-1	116
53D003-2	116
53E001-1	109
53E003-1	109
53E003-2	177
53E006-1	109
53E009-1	614
53E010-1	116
53E011-1	166
53E011-2	137A
53F001-1	116
53F002-1	116
53H001-1	116
53H001-2	109
53J001-1	156
53J002-1	156
53J002-2	117
53J003-1	116
53J003-2	177
53J004-1	137A
53J004-2	143A
53J004-3	138A
53K001-2	109
53K001-3	614
53K001-4	5070A
53K001-5	109
53K001-6	116
53K001-6(5,7)	116
53K001-7	116
53K001-7(6,8)	116
53K001-8	116
53K001-9	117
53K004-11	116
53K001-14	139A
53K001-15	614
53K001-18	139A
53L001-1	109
53L001-5	125
53L001-10	109
53L001-14	125
53L001-15	519
53N001-1	109
53N001-2	116
53N001-3	116
53N001-4	5080A
53N001-5	177
53N001-6	614
53N001-7	109
53N001-9	5081A
53N002-2	116
53N003-1	109
53N003-2	109
53N003-3	110MP
53N004-1	614
53N004-5	109
53N004-6	109
53N004-7	116
53N004-8	116
53N004-9	116
53N004-10	110MP
53N004-11	109
53N004-12	177
53N004-13	614
53N004-14	109
53N49	105
53P151	123
53P153	121
53P157	102
53P158	123
53P159	123
53P161	123
53P162	123
53P163	123
53P165	123
53P166	129
53P169	128
53P170	129
53SC-15	614
53ST-2SC2344	375
53SZ-BZ-110	5074A
53SZ-HZ9B3	5018A
53SZ-RD11FB	5074A
53T001-1	109
53T001-2	614
53T001-3	116
53T001-4	109
53T001-5	109
53T001-6	109
53T001-7	177
53U001-1	109
53U001-2	177
53V001-2	109
53Y001-1	116
53Z6	5174A
53Z6A	5174A
54	108
54 ST-2SC1815Y(AU)E	85
54-1	123AP
54-1-7401	7401
54A	123AP
54B	123AP
54BLK	108
54BLU	123AP
54BRN	108
54C	123AP
54D	123AP
54E	287
54F	123AP
54GRN	123AP
54ORN	108
54RED	108
54SI-7A7075P	1080
54SI-TA7075P	1080
54ST-2SC1815Y(AU)E	85
54V001-2	109
54VB60	5315
54WHT	123AP
54YEL	123AP
54Z6	5175A
54Z6A	5175A
55-001	506
55-1	109
55-641	172A
55-642	128
55-643	129
55-1016	102A
55-1026	123AP
55-1027	103A
55-1029	158
55-1031	158
55-1032	103A
55-1034	123AP
55-1082	123AP
55-1083	159
55-1083A	159
55-1084	128
55-1085	159
55-1085A	159
55-152579	110MP
55-509276-2	218
55-509276-4	218
55P2	126
55P3	126
55SD-1N60S	109
55ST-2SC401AK	375
55ST-2SD401AK	375
55SZ-RD12EB	5021A
55Z4	140A
55Z6	5176A
55Z6A	5176A
56-1	109
56-2	109
56-3	109
56-4	109
56-5	177
56-6	5071A
56-7	109
56-8	109
56-10	109
56-11	109
56-13	148A
56-15	506
56-16	135A
56-18	151A
56-19	139A
56-20	109
56-21	112
56-23	614
56-24	177
56-25	145A
56-26	109
56-27	177
56-28	177
56-29	151A
56-31	138A
56-32	143A
56-33	117
56-35	123AP
56-36	5075A
56-44	135A
56-45	5079A
56-46	139A
56-47	146A
56-48	151A
56-49	614
56-50	5066A
56-51	142A
56-52	116
56-53	141A
56-54	5072A
56-55	5086A
56-56	177
56-57	142A
56-58	5071A
56-59	135A
56-62	139A
56-63	5071A
56-66	5086A
56-67	140A
56-68	5092A
56-70	134A
56-71	5071A
56-72	5086A
56-73	177
56-74	5000A
56-76	5084A
56-78	117
56-79	5084A
56-89	109
56-93-2867	177
56-234	108
56-4826	199
56-4827	199
56-4829	229
56-4830	293
56-4831	193
56-4832	177
56-4833	1073
56-4834	801
56-4835	614
56-4836	601
56-4837	142A
56-4839	116
56-4885	5072A
56-4886	109
56-8086	107
56-8086A	107
56-8086B	107
56-8086C	107
56-8087	107
56-8087B	107
56-8087C	107
56-8088	107
56-8088A	107
56-8088C	107
56-8089	123AP
56-8089A	123AP
56-8089C	123AP
56-8090	123AP
56-8090A	123AP
56-8090C	123AP
56-8091	102A
56-8091A	102A
56-8091B	102A
56-8091C	102A
56-8091D	102A
56-8092	102A
56-8092A	102A
56-8092B	102A
56-8093	109
56-8094(NPN)	103A
56-8094(PNP)	102A
56-8095	110MP
56-8096	138A
56-8097	116
56-8098	159
56-8098A	159
56-8098B	159
56-8098C	159
56-8099	158
56-8100	103A
56-8100A	103A
56-8100B	103A
56-8100C	103A
56-8100D	103A
56-8101	158
56-8196	199
56-8197	199
56-8198	116
56-8199	116
56-86412-3	184
56-86461-9	238
56-861041-3	552
56=SI-TA7644BP	1547
56A1-1	703
56A3-1	712
56A4-1	714
56A7-1	147A
56A16-1	2028
56A17-1	791
56A20-1	783
56A22-1	123AP
56A23-1	815
56A42-1	1116
56A65-1	1231
56A75-1	1410
56A101-1	1413
56A102-1	1496
56A107-1	1785
56A113-1	615P
56A120-1	1522
56A121-1	1245
56A122-1	1231A
56A137-1	1547
56A138-1	1572
56A141-1	1743
56A265-1	4066B
56A355-1	1658
56A402-L	107
56A-1-4051	4051B
56A-1-7406	7406
56A-1-7474	7474
56A-1-LS02	74LS02
56A-1-LS04	74LS04
56A-1-LS08	74LS08
56A-1-LS10	74LS10
56A-1-LS14	74LS14
56A-1-LS20	74LS20
56A-1-LS27	74LS27
56A-1-LS32	74LS32
56A-1-LS74	74LS74A
56A-1-LS75	74LS75
56A-1-LS86	74LS86
56A-1-LS109	74LS109A
56A-1-LS139	74LS139
56A-1-LS153	74LS153
56A-1-LS155	74LS155
56A-1-LS161	74LS161A
56A-1-LS244	74LS244
56A-1-LS257	74LS257
56A-1-LS273	74LS273
56A-1-LS367	74LS367
56A-1-S001	3880
56A-2-0339	834
56A-2-0555	955M
56A-2-1458	778A
56A-2-2002	1232
56A-2-3340	829
56A-5-7812	966
56A-5-7815	968
56A-5-7905	961
56A-6-2114	2114
56A-6-S001	2104
56B16-1	2028
56B22-1	123AP
56B74-1	1440
56C1	703
56C1-1	703
56C3-1	712
56C4-1	714
56C7-1	147A
56C16-1	2028
56C17-1	791
56D1-1	703
56D3-1	712
56D4-1	714
56D16-1	2028
56D17-1	791
56D20-1	783
56D65-1	1231
56D75-1	1410
56D75-1A	1416
56D-75-1/1A	1410
56L101	714
56P1	160
56P2	160
56P3	160
56P4	160
56P4P	160
56SI-TA7644BP	1547
56ST-LM2152	123AP
56ST-MJE9742	157
56SZ-120	5021A
56SZ-WZ120	5021A
56Z6	5116A
56Z6A	5116A
57-000901504	123AP
57-00901504	123AP
57-0006	116
57-0004503	123AP
57-0005452	123AP
57-0005503	123AP
57-01491-B	123AP
57-01491-C	128
57-01494C	128
57-1	116
57-2	116
57-6	116
57-12	116
57-13	116
57-15	116
57-17	116
57-18	5980
57-20	116
57-21	116
57-22	116
57-23	116
57-24	116
57-25	117
57-26	117
57-27	116
57-28	116
57-29	117
57-31	116
57-32	113A
57-33	116
57-36	118
57-38	116
57-39	5524
57-42	156
57-42A	156
57-43	117
57-46	116
57-49	117
57-55	5402
57-58	116
57-59	116
57-60	116
57-61	231
57-62	230
57-65	116
57-100	5019A
57-110	5020A
57-120	5021A
57-160	5025A
57-200	5029A
57-220	5030A
57-249	5000A
57-330	5036A
57-439	5008A
57-569	5011A
57-629	5013A
57-689	5014A
57-829	5016A
57-919	5018A
57-4015-27	102A
57-4015-28	158
57-4018-60	130
57-SI-HA11423	1471
57A1-1	109
57A1-2	109
57A1-3	103A
57A1-4	103A
57A1-5	103A
57A1-6	103A
57A1-7	158
57A1-8	102A
57A1-9	160
57A1-10	160
57A1-11	102
57A1-12	160
57A1-13	160
57A1-14	102A
57A1-15	160
57A1-16	160
57A1-17	158
57A1-18	158
57A1-19	158
57A1-20	158
57A1-21	158
57A1-22	160
57A1-23	102A
57A1-24	160
57A1-25	160
57A1-26	102A
57A1-27	102A
57A1-28	102A
57A1-30	160
57A1-31	160
57A1-32	160
57A1-33	160
57A1-34	102A
57A1-35	160
57A1-36	160
57A1-37	160
57A1-38	158
57A1-40	102A
57A1-41	160
57A1-42	158
57A1-43	102A
57A1-44	102A
57A1-45	160
57A1-46	160
57A1-47	160
57A1-48	160
57A1-49	160
57A1-50	160
57A1-51	123AP
57A1-52	106
57A1-53	102A
57A1-54	109
57A1-55(NPN)	123AP
57A1-55(PNP)	159
57A1-56	158
57A1-57	160

PART NUMBER	NTE REPLACEMENT
57A1-58	102A
57A1-59	102A
57A1-60	158
57A1-61	160
57A1-62	109
57A1-63	117
57A1-64	109
57A1-65	112
57A1-66	102A
57A1-67	160
57A1-68	102A
57A1-69	160
57A1-70	102A
57A1-71	102A
57A1-72	160
57A1-73	160
57A1-74	160
57A1-75	123AP
57A1-76	159
57A1-76A	159
57A1-77	158
57A1-78	103A
57A1-79	102A
57A1-80	160
57A1-81	160
57A1-82	102A
57A1-83	102A
57A1-84	160
57A1-85	160
57A1-86	160
57A1-87	160
57A1-89	160
57A1-90	102A
57A1-91	102A
57A1-92	102A
57A1-93	102A
57A1-94	160
57A1-95	102A
57A1-96	160
57A1-97	102A
57A1-98	160
57A1-99	160
57A1-100	160
57A1-101	160
57A1-102	160
57A1-103	160
57A1-104	102A
57A1-105	102A
57A1-106	102A
57A1-107	160
57A1-108	160
57A1-109	160
57A1-110	160
57A1-111	102A
57A1-112	160
57A1-113	160
57A1-114	160
57A1-115	160
57A1-116	102A
57A1-117	102A
57A1-118	102A
57A1-119	121
57A1-120	160
57A1-121	102A
57A1-122	154
57A1-123	123AP
57A1-124	123AP
57A2.4	102A
57A2-1	126
57A2-4	158
57A2-15	102A
57A2-19	126
57A2-22	160
57A2-23	102A
57A2-24	102A
57A2-25	158
57A2-26	160
57A2-27	123AP
57A2-28	123AP
57A2-29	102A
57A2-30	160
57A2-31	160
57A2-32	102A
57A2-33	102A
57A2-34	102A
57A2-35	160
57A2-36	102A
57A2-37	160
57A2-38	128
57A2-39	102A
57A2-40	160
57A2-41	160
57A2-42	160
57A2-43	102A
57A2-44	102A
57A2-45	102A
57A2-46	102A
57A2-47	175
57A2-48	160
57A2-49(NPN)	103A
57A2-49(PNP)	102A
57A2-50	160
57A2-51	160
57A2-52	102A
57A2-58	175
57A2-59	123AP
57A2-60	102A
57A2-61	158
57A2-62	123AP
57A2-63	123AP
57A2-64	123AP
57A2-65	160
57A2-66	160
57A2-67	160

PART NUMBER	NTE REPLACEMENT
57A2-68	160
57A2-70	159
57A2-70A	159
57A2-71	159
57A2-71A	159
57A2-72	102A
57A2-73	123AP
57A2-75	160
57A2-77	160
57A2-78	102A
57A2-80	160
57A2-83	102A
57A2-84	175
57A2-85	123AP
57A2-87	123AP
57A2-88	102A
57A2-89	160
57A2-90	160
57A2-93	160
57A2-97	123AP
57A2-101	123AP
57A2-102	123AP
57A2-103	123AP
57A2-104	160
57A2-105	160
57A2-113	123AP
57A2-116	123AP
57A2-126	123AP
57A2-149	160
57A2-153	123AP
57A2-157	160
57A2-158	160
57A2-159	160
57A2-192	123AP
57A3-1(NPN)	123AP
57A3-1(PNP)	159
57A3-2(NPN)	123AP
57A3-2(PNP)	159
57A3-3(NPN)	103A
57A3-3(PNP)	102A
57A3-4	102A
57A3-5	102A
57A3-6	102A
57A3-7	104MP
57A3-8	104MP
57A3-9	104MP
57A3-10	104MP
57A3-11	104MP
57A3-12	104MP
57A3-13(NPN)	123AP
57A3-13(PNP)	159
57A4-1	121
57A4-2	121
57A4-4	121
57A5	103
57A5-1	126
57A5-2	126
57A5-3	102A
57A5-4	126
57A5-5	102A
57A5-6	108
57A5-7	108
57A5-8	108
57A5-9	126
57A5-10	126
57A6(NPN)	199
57A6(PNP)	102
57A6-1	102
57A6-2	121
57A6-3	121
57A6-4	123AP
57A6-5	103A
57A6-6	103
57A6-6A	100
57A6-6B	100
57A6-6C	100
57A6-7	123
57A6-8	121
57A6-9	123AP
57A6-10	124
57A6-11	123AP
57A6-12	121
57A6-14	124
57A6-15	129
57A6-16	126
57A6-17	123
57A6-18(NPN)	123AP
57A6-18(PNP)	159
57A6-19(DIODE)	120
57A6-19(TRANS)	123
57A6-20	103A
57A6-21	103A
57A6-22	102
57A6-23	121
57A6-24	124
57A6-25	102A
57A6-26	129
57A6-26A	129
57A6-27	123
57A6-28(NPN)	123AP
57A6-28(PNP)	159
57A6-29	123
57A6-30	123
57A6-31	129
57A6-31A	129
57A6-32	123
57A6-33	129
57A6-33A	129
57A6-34(NPN)	128
57A6-34(PNP)	129
57A7-1	108
57A7-2	108
57A7-3	108
57A7-4	108

PART NUMBER	NTE REPLACEMENT
57A7-5	108
57A7-6	108
57A7-7	108
57A7-8	128
57A7-9	123AP
57A7-10	123AP
57A7-15	123AP
57A7-17	123AP
57A7-18	123AP
57A7-20	123AP
57A9-1	160
57A9-2	121
57A10-1	108
57A10-2	108
57A10A-8-6	108
57A11-1	123AP
57A12-1	154
57A12-2	154
57A12-3	175
57A12-4	128
57A12-5	175
57A14-1	128
57A14-2	128
57A14-3	128
57A15-1	123AP
57A15-2	123AP
57A15-3	123AP
57A15-4	123AP
57A15-5	159
57A15-50	159
57A16	126
57A16-1	123AP
57A19	159
57A19-1	159
57A19-1A	159
57A19-2	159
57A19-3	159
57A19-10	159
57A19-20	159
57A19-30	159
57A20-1	108
57A20G14	218
57A21	107
57A21-1	108
57A21-2	108
57A21-3	108
57A21-4	108
57A21-5	108
57A21-6	108
57A21-7	108
57A21-8	123AP
57A21-9	108
57A21-10	108
57A21-11	107
57A21-12	107
57A21-13	107
57A21-14	107
57A21-15	108
57A21-16	161
57A21-17	161
57A21-18	161
57A21-21	107
57A21-26	107
57A21-45	107
57A22-1	179
57A22-2	179
57A23	129
57A23-1	129
57A23-2	129
57A23-3	129
57A24	161
57A24-1	123AP
57A24-2	123AP
57A24-3	123AP
57A24-4	123AP
57A27-1	123AP
57A27-2	108
57A28	704
57A31-1	132
57A31-2	312
57A31-3	312
57A31-4	133
57A32-2	1142
57A32-3	1039
57A32-10	722
57A32-11	1075A
57A32-16	722
57A32-19	1103
57A32-21	799
57A32-25	1124
57A32-27	1124
57A32-29	1142
57A32-32	801
57A33-1(NPN)	123AP
57A33-1(PNP)	159
57A68	102A
57A100-3(NPN)	103A
57A100-3(PNP)	102A
57A100-5(NPN)	103A
57A100-5(PNP)	102A
57A100-7	102A
57A100-11	131
57A100-385(NPN)	103A
57A100-385(PNP)	102A
57A101-4	108
57A102-4	161
57A103-4	161
57A104-1	154
57A104-2	154
57A104-3	154
57A104-4	154
57A104-5	154
57A104-6	154
57A104-7	154

PART NUMBER	NTE REPLACEMENT
57A104-8	154
57A104-8-6	128
57A105-12	123AP
57A106-12	159
57A107-1	108
57A107-2	108
57A107-3	108
57A107-4	108
57A107-5	108
57A107-6	108
57A107-8	108
57A108-1	106
57A108-2	106
57A108-3	106
57A108-4	106
57A108-5	106
57A108-6	106
57A108-6-8	129
57A108-6A	159
57A108-7	106
57A108-8	106
57A109-9	128
57A110-9	129
57A111-9(NPN)	128
57A111-9(PNP)	129
57A112-9	129
57A112-9A	129
57A113-9	128
57A114-9	129
57A114-9A	129
57A115-9	129
57A115-9A	129
57A116-9	129
57A116-9A	129
57A117-9	123AP
57A118-12	123AP
57A119-2	161
57A119-12	123AP
57A120-12	123AP
57A121-9	123AP
57A122-9	129
57A122-9A	159
57A123-10	175
57A124-10	104
57A125-9	123AP
57A126	102
57A126-1	199
57A126-12	107
57A127	157
57A128-9	128
57A129-9	128
57A130	126
57A130-9	129
57A130-9A	159
57A131	126
57A131-10	128
57A132	126
57A132-9	160
57A132-10	129
57A132-29	1142
57A133-12	159
57A134-12	108
57A135-12	123AP
57A136-1	154
57A136-2	154
57A136-3	154
57A136-4	154
57A136-5	154
57A136-6	154
57A136-7	154
57A136-8	154
57A136-9	154
57A136-10	154
57A136-11	154
57A136-12	123AP
57A137-12	159
57A137-12A	159
57A138-4	108
57A138-4(3RD LF)	233
57A138-4(3RD-IF)	123AP
57A138-4(LAST LF)	233
57A138-4-6	108
57A139-1	161
57A139-2	161
57A139-3	161
57A139-4	319P
57A139-4-6	108
57A140-12	123AP
57A141-1	108
57A141-2	108
57A141-3	108
57A141-4	161
57A142-1	108
57A142-2	199
57A142-3	108
57A142-4	233
57A142-4(3RD IF)	233
57A142-7	161
57A143	102
57A143-1	108
57A143-2	108
57A143-3	108
57A143-4	108
57A143-5	108
57A143-6	108
57A143-7	108
57A143-8	108
57A143-9	108
57A143-10	108
57A143-11	108
57A143-12	199
57A144-12	199
57A145-12	159
57A145-12A	159

PART NUMBER	NTE REPLACEMENT
57A146-12	108
57A147-12	159
57A147-12A	159
57A148-1	102A
57A148-2	129
57A148-3	129
57A148-4	129
57A148-5	129
57A148-6	129
57A148-7	129
57A148-8	129
57A148-9	129
57A148-10	129
57A148-11	129
57A148-12	159
57A148-12A	129
57A149-12	132
57A150-12	132
57A151-6	108
57A152-1	123AP
57A152-2	123AP
57A152-3	123AP
57A152-4	123AP
57A152-5	123AP
57A152-6	123AP
57A152-7	123AP
57A152-8	123AP
57A152-9	123AP
57A152-10	123AP
57A152-11	123AP
57A152-12	108
57A153-1	123AP
57A153-2	123AP
57A153-3	123AP
57A153-4	123AP
57A153-5	123AP
57A153-6	123AP
57A153-7	123AP
57A153-8	123AP
57A153-9	123AP
57A155-10	175
57A156	128
57A156-9	123AP
57A157	159
57A157-9	159
57A157-9A	159
57A157-90	159
57A158-1	124
57A158-2	124
57A158-3	124
57A158-5	124
57A158-6	124
57A158-7	124
57A158-8	124
57A158-9	124
57A158-10	124
57A159-12	159
57A159-12A	159
57A160-1	108
57A160-2	108
57A160-3	108
57A160-4	108
57A160-8	154
57A164-4	161
57A166-12	123AP
57A167-9	192
57A168	126
57A168-9	193
57A169	102
57A170	102
57A172-8	171
57A174-8	159
57A175-12	159
57A177-12	161
57A178-12	159
57A179-4	161
57A180	160
57A180-4	229
57A181-12	123AP
57A182-10	123AP
57A182-12	85
57A184	160
57A184-12	123AP
57A185-12	159
57A186	126
57A186-11	165
57A186-12	165
57A187	160
57A187-12	291
57A188	160
57A188-12	292
57A189	102
57A189-8	159
57A191-12	123AP
57A192-10	124
57A193-11	171
57A193-12	123AP
57A194-1L	154
57A194-11	154
57A194-11(PULSE)	154
57A194-12	5404
57A195-10	152
57A196-10	130
57A197-12	159
57A198-11	165
57A199-4	123AP
57A199-11	165
57A200-12	123AP
57A201-13	123AP
57A201-14	159
57A202-13	123AP
57A203-14	123AP
57A204-14	123AP
57A205-14	153

PART NUMBER	NTE REPLACEMENT
57A206-14	153
57A207-8	154
57A208-8	171
57A211-8	190
57A213-11	165
57A214-2	184
57A214-12	188
57A215-12	159
57A216-12	159
57A219-14	289
57A220-14	290
57A235-12	159
57A236-11	171
57A240-14	290
57A241-14	289
57A243-10	5404
57A244-14	196
57A245-14	197
57A249-4	161
57A250-14	152
57A251-14	153
57A252-1	123AP
57A253-14	123AP
57A256-10	130
57A258-8	159
57A259-10	5404
57A261-10	154
57A263-11	238
57A265-4	123AP
57A267-4	222
57A268-9	123AP
57A273-14	261
57A274-14	262
57A277-14	398
57A278-14	375
57A279-14	152
57A280-14	289
57A281-14	290
57A282-12	123AP
57A283-11	154
57A285-10	5645
57A286-10	152
57A294-12	123AP
57A295-8	171
57A296-10	291
57A310-14	292
57A311-14	291
57A312	238
57A312-11	171
57A401-11	379
57A403-12	159
57A404-12	297
57A405-12	298
57A411-3	459
57A413-1	287
57A419-GR	85
57A419-GY	85
57A419-Y	85
57A420-GR	290A
57A422-8	399
57A423-8	399
57A423-8T	399
57A424-11	89
57A428-12	375
57A446-2	289A
57A458-0	290A
57A459-Y	399
57A460-12	2302
57A460-15	2302
57A493-10	287
57A1127	102A
57A1130	160
57A1131	160
57A1132	160
57A1143	102A
57A1186	160
57A2141-14	128
57AC179-4	161
57B2-1	160
57B2-2	160
57B2-3	158
57B2-4	158
57B2-5	103
57B2-6	102A
57B2-7	158
57B2-8	103A
57B2-9	160
57B2-10	158
57B2-11	160
57B2-12	102A
57B2-13	160
57B2-14	160
57B2-15	158
57B2-16	158
57B2-17	160
57B2-18	160
57B2-19	160
57B2-20	160
57B2-21	158
57B2-22	160
57B2-23	102A
57B2-24	102A
57B2-25	158
57B2-26	160
57B2-27	123AP
57B2-28	123AP
57B2-29	102A
57B2-30	160
57B2-31	160
57B2-32	102A
57B2-33	102A
57B2-34	102A
57B2-35	160
57B2-36	102A

PART NUMBER	NTE REPLACEMENT
57B2-37	160
57B2-38	128
57B2-39	102A
57B2-40	160
57B2-41	160
57B2-42	160
57B2-43	102A
57B2-44	102A
57B2-45	102A
57B2-46	102A
57B2-47	175
57B2-48	160
57B2-49(NPN)	103A
57B2-49(PNP)	102A
57B2-50	160
57B2-51	160
57B2-52	102A
57B2-57	128
57B2-58	175
57B2-59	123AP
57B2-60	102A
57B2-61	158
57B2-62	123AP
57B2-63	123AP
57B2-64	123AP
57B2-65	160
57B2-66	160
57B2-67	160
57B2-68	160
57B2-70	159
57B2-70A	159
57B2-71	159
57B2-71A	159
57B2-72	102A
57B2-73	123AP
57B2-75	160
57B2-77	160
57B2-78	102A
57B2-79	123AP
57B2-80	160
57B2-83	102A
57B2-84	175
57B2-85	123AP
57B2-87	123AP
57B2-88	102A
57B2-89	160
57B2-90	160
57B2-93	160
57B2-97	123AP
57B2-101	123AP
57B2-102	123AP
57B2-103	123AP
57B2-104	160
57B2-105	160
57B2-113	123AP
57B2-116	123AP
57B2-126	123AP
57B2-149	160
57B2-153	123AP
57B2-157	160
57B2-158	160
57B2-159	160
57B2-192	123AP
57B3-1(NPN)	123AP
57B3-1(PNP)	159
57B3-2(NPN)	123AP
57B3-2(PNP)	123AP
57B3-3(NPN)	103A
57B3-3(PNP)	102A
57B3-4	102A
57B3-5	102A
57B3-6	102A
57B3-7	104MP
57B3-8	104MP
57B3-9	104MP
57B3-10	104MP
57B3-11	104MP
57B3-12	121MP
57B3-13(NPN)	123AP
57B3-13(PNP)	159
57B4-1	121
57B4-2	121
57B4-4	121
57B5-6	199
57B5-7	199
57B5-8	199
57B6	102
57B6-4	123AP
57B6-9	123AP
57B6-11	123AP
57B6-12	104
57B6-19	123AP
57B12-4	128
57B21	108
57B21-1	108
57B21-2	108
57B21-3	108
57B21-4	108
57B21-5	108
57B21-6	161
57B21-7	161
57B21-9	107
57B21-12	108
57B21-13	108
57B21-14	108
57B21-15	108
57B21-16	108
57B21-17	161
57B21-18	108
57B27-2	123AP
57B30-12	107
57B100-3(NPN)	103A
57B100-3(PNP)	102A
57B100-5(NPN)	103A

PART NUMBER	NTE REPLACEMENT
57B100-5(PNP)	102A
57B100-7	102A
57B100-11	131
57B100-385(NPN)	103A
57B100-385(PNP)	102A
57B101-4	108
57B102-4	161
57B103-4	161
57B104-8	161
57B105-12	123AP
57B106-12	159
57B107-8	123AP
57B108-6	159
57B108-6A	159
57B109-9	128
57B110-9	129
57B111-9(NPN)	128
57B111-9(PNP)	129
57B112-9	129
57B112-9A	129
57B113-9	128
57B114-9	129
57B114-9A	129
57B115-9	129
57B115-9A	129
57B116-9	129
57B116-9A	129
57B117-9	123AP
57B118-12	123AP
57B119-2	161
57B119-12	123AP
57B120-12	123AP
57B121-9	123AP
57B122-9	159
57B122-9A	159
57B123-10	175
57B124-10	104
57B125-9	123AP
57B126-12	123AP
57B128-9	128
57B129-9	123AP
57B130-9	159
57B130-9A	159
57B131-10	152
57B132-10	153
57B133-12	159
57B134-12	108
57B135-12	123AP
57B136-1	154
57B136-2	154
57B136-3	154
57B136-4	154
57B136-5	154
57B136-6	154
57B136-7	154
57B136-8	154
57B136-9	154
57B136-10	154
57B136-11	154
57B136-12	123AP
57B137-12	159
57B137-12A	159
57B138-4	123AP
57B139-4	319P
57B140-12	123AP
57B141-1	108
57B141-2	108
57B141-3	108
57B141-4	161
57B142-1	108
57B142-2	108
57B142-3	108
57B142-4	233
57B143-1	108
57B143-2	108
57B143-3	108
57B143-4	108
57B143-5	108
57B143-6	108
57B143-7	108
57B143-8	108
57B143-9	108
57B143-10	108
57B143-11	108
57B143-12	123AP
57B144-12	123AP
57B145-12	159
57B145-12A	159
57B146-12	123AP
57B147-12	159
57B147-12A	159
57B148-1	129
57B148-2	129
57B148-3	129
57B148-4	129
57B148-5	129
57B148-6	129
57B148-7	129
57B148-8	129
57B148-9	129
57B148-10	129
57B148-11	129
57B148-12	129
57B148-12A	129
57B149-12	132
57B150-12	132
57B151-6	108
57B152-1	123AP
57B152-2	123AP
57B152-3	123AP
57B152-4	123AP
57B152-5	123AP
57B152-6	123AP
57B152-7	123AP
57B152-8	123AP
57B152-9	123AP
57B152-10	123AP
57B152-11	123AP
57B152-12	108
57B153-1	123AP
57B153-2	123AP
57B153-3	123AP
57B153-4	123AP
57B153-5	123AP
57B153-6	123AP
57B153-7	123AP
57B153-8	123AP
57B153-9	123AP
57B155-10	175
57B156-9	123AP
57B157-9	159
57B157-9A	159
57B158-1	124
57B158-2	124
57B158-3	124
57B158-4	124
57B158-5	124
57B158-6	124
57B158-7	124
57B158-8	124
57B158-9	124
57B158-10	175
57B159-12	159
57B159-12A	159
57B160-1	108
57B160-2	108
57B160-3	108
57B160-4	108
57B160-5	108
57B160-6	108
57B160-7	108
57B160-8	108
57B162-12	192
57B163-12	129
57B163-12A	129
57B165-11	128
57B166-9A	129
57B166-12	108
57B167-9	128
57B168	102A
57B168-9	129
57B168-99	129
57B169	102A
57B169-12	132
57B170	102A
57B170-9	128
57B171-9	129
57B172-8	190
57B175-9	130
57B175-9A	130
57B175-12	159
57B178-12	159
57B179-4	161
57B180	160
57B181-12	123AP
57B182-12	85
57B184	160
57B184-1	123AP
57B184-12	123AP
57B185-12	290A
57B186	160
57B186-11	165
57B187	160
57B187-12	291
57B188	160
57B188-12	292
57B189-8	159
57B191-12	123AP
57B192-10	124
57B192-11	124
57B193-11	171
57B194-11	123AP
57B195-10	124
57B196-10	130
57B197-12	159
57B198-11	165
57B199-11	165
57B200-12	123AP
57B201-14	159
57B202-13	123AP
57B203-14	199
57B205-14	152
57B206-14	153
57B207-8	154
57B208-8	171
57B211-8	190
57B213-11	165
57B214-12	188
57B216-12	159
57B219-14	289
57B220-14	290
57B235-12	159
57B236-11	171
57B240-14	290
57B241-14	289
57B243-10	5404
57B244-14	196
57B245-14	197
57B249-4	161
57B250-14	152
57B251-14	153
57B253-14	123AP
57B256-10	130
57B258-8	159
57B263-11	89
57B277-14	398
57B278-14	375
57B279-14	376
57B280-14	289
57B281-14	290
57B282-12	123AP
57B283-11	154
57B285-10	5645
57B286-10	152
57B296-10	291
57B310-14	292
57B311-14	291
57B312-11	171
57B313-11	89
57B316-10	94
57B402-4	107
57B402-L	107
57B413-1	287
57B419-GR	85
57B419-P	85
57B419-Q	85
57B420-P	290A
57B420-Q	290A
57B421-11	379
57B423-8	399
57B424-11	89
57B427-1	198
57B428-12	375
57B429-12	398
57B446-2	289A
57B459-Y	399
57B460-12	2302
57B483-11	154
57B1127	102A
57B1130	160
57B1131	160
57B1143	102A
57B1186	160
57B-102-4	123AP
57BA460-12	2302
57C5	103
57C5-1	126
57C5-2	160
57C5-3	102A
57C5-4	126
57C5-5	102A
57C5-6	108
57C5-7	108
57C5-8	108
57C5-9	126
57C5-10	126
57C6	199
57C6-1	102
57C6-2	121
57C6-3	121
57C6-4	123AP
57C6-5	103A
57C6-6	103
57C6-6A	100
57C6-6B	100
57C6-6C	100
57C6-7	123
57C6-8	121
57C6-9	123AP
57C6-10	124
57C6-11	123AP
57C6-12	121
57C6-14	124
57C6-15	129
57C6-16	126
57C6-17	123
57C6-18(NPN)	123AP
57C6-18(PNP)	159
57C6-19	123
57C6-20	103A
57C6-21	103A
57C6-22	102
57C6-23	121
57C6-24	124
57C6-25	102A
57C6-26	129
57C6-26A	129
57C6-27	123
57C6-28(NPN)	123AP
57C6-28(PNP)	159
57C6-29	123
57C6-30	123
57C6-31	129
57C6-31A	129
57C6-32	123
57C6-33	129
57C6-33A	129
57C6-34(NPN)	128
57C6-34(PNP)	129
57C7-1	108
57C7-2	108
57C7-3	108
57C7-4	108
57C7-5	108
57C7-6	108
57C7-7	108
57C7-8	128
57C7-9	123AP
57C7-10	123AP
57C7-15	123AP
57C7-17	123AP
57C7-18	123AP
57C7-20	123AP
57C9-2	121
57C10-1	108
57C10-2	108
57C11-1	123AP
57C12-1	154
57C12-2	154
57C12-3	175
57C12-4	128
57C12-5	175
57C14-1	128
57C14-2	128
57C14-3	128
57C15-1	123AP
57C15-2	123AP
57C15-3	123AP
57C15-4	123AP
57C15-5	159
57C15-50	159
57C16	126
57C16-1	123AP
57C19-1	159
57C19-1A	159
57C20-1	108
57C21	107
57C21-5	107
57C22-1	179
57C22-2	179
57C23	129
57C23-1	129
57C23-2	129
57C23-3	129
57C24-1	123AP
57C24-2	123AP
57C24-3	123AP
57C24-4	123AP
57C27-1	123AP
57C27-2	108
57C28	704
57C68	102A
57C104-8	161
57C105-12	123AP
57C109-9	128
57C110-9	129
57C121-9	123AP
57C122-9	129
57C142-4	161
57C148-12	129
57C148-12A	129
57C156-9	123AP
57C157-9	159
57C157-90	159
57C164-4	161
57C179-4	107
57C182-12	123AP
57C205-14	375
57C206-14	398
57C208-8	399
57C279-14	152
57C285-10	5645
57C423-8	399
57D1-1	109
57D1-2	109
57D1-3	103A
57D1-4	103A
57D1-5	103A
57D1-6	103A
57D1-7	158
57D1-8	102A
57D1-9	160
57D1-10	160
57D1-11	102
57D1-12	160
57D1-13	160
57D1-14	102A
57D1-15	160
57D1-16	160
57D1-17	158
57D1-18	158
57D1-19	158
57D1-20	158
57D1-21	158
57D1-22	160
57D1-23	102A
57D1-24	160
57D1-25	160
57D1-26	102A
57D1-27	102A
57D1-28	102A
57D1-30	160
57D1-31	160
57D1-32	160
57D1-33	160
57D1-34	102A
57D1-35	160
57D1-36	160
57D1-37	160
57D1-38	158
57D1-39	160
57D1-40	102A
57D1-41	160
57D1-42	158
57D1-43	102A
57D1-44	102A
57D1-45	160
57D1-46	160
57D1-47	160
57D1-48	160
57D1-49	160
57D1-50	160
57D1-51	123AP
57D1-52	106
57D1-53	102A
57D1-54	109
57D1-55(NPN)	123AP
57D1-55(PNP)	159
57D1-56	158
57D1-57	160
57D1-58	102A
57D1-59	102A
57D1-60	158
57D1-61	160
57D1-62	109
57D1-63	117
57D1-64	109
57D1-65	112
57D1-66	102A
57D1-67	160
57D1-68	102A
57D1-69	160
57D1-70	102A
57D1-71	102A
57D1-72	160
57D1-73	160
57D1-74	160
57D1-75	123AP
57D1-76	159
57D1-76A	159
57D1-77	158
57D1-78	103A
57D1-79	102A
57D1-80	160
57D1-81	160
57D1-82	102A
57D1-83	102A
57D1-84	160
57D1-85	160
57D1-86	160
57D1-87	160
57D1-88	160
57D1-89	160
57D1-90	102A
57D1-91	102A
57D1-92	102A
57D1-93	102A
57D1-94	160
57D1-95	102A
57D1-96	160
57D1-97	102A
57D1-98	160
57D1-99	160
57D1-100	160
57D1-101	160
57D1-102	160
57D1-103	160
57D1-104	102A
57D1-105	102A
57D1-106	102A
57D1-107	160
57D1-108	160
57D1-109	160
57D1-110	160
57D1-111	102A
57D1-112	160
57D1-113	160
57D1-114	160
57D1-115	160
57D1-116	102A
57D1-117	102A
57D1-118	102A
57D1-119	121
57D1-120	160
57D1-121	102A
57D1-122	154
57D1-123	123AP
57D1-124	123AP
57D3-6	102
57D4-1	121
57D4-2	121
57D5-1	126
57D5-2	126
57D5-4	126
57D6-4	123AP
57D6-10	124
57D6-12	121
57D6-19	123
57D9-1	160
57D9-2	121
57D14-1	123AP
57D14-2	123AP
57D14-3	123AP
57D17-1	791
57D19	159
57D19-1	159
57D19-2	159
57D19-3	159
57D19-10	159
57D19-20	159
57D19-30	159
57D24	161
57D24-1	108
57D24-2	108
57D24-3	108
57D68	102
57D107-8	108
57D126	102
57D127	157
57D130	126
57D131	126
57D132	126
57D132-9	160
57D136-12	123AP
57D143	102
57D156	102
57D168	126
57D169	102
57D170	102
57D180	100
57D184	100
57D186	126
57D187	126
57D188	126
57D189	102
57D205-14	375
57D206-14	398
57D285-10	5645
57D1127	102
57D1130	160
57D1131	160
57D1132	160
57D1143	102
57D1186	160
57DG-23	121
57DG-32	121
57L1-1	160
57L1-2	160
57L1-3	160
57L1-4	160
57L1-5	158
57L1-6	102A
57L1-8	102A
57L1-9	160
57L1-10	160
57L1-11	160
57L1-12	160
57L2-1	128
57L2-2	123AP
57L3-1	123AP
57L3-4	123AP
57L5-1	104
57L105-12	128
57L106-9	133
57M1-1	160
57M1-2	160
57M1-3	160
57M1-4	160
57M1-5	102A
57M1-6	102A
57M1-8	158
57M1-9	160
57M1-10	160
57M1-11	160
57M1-12	160
57M1-13	129
57M1-13A	129
57M1-14	123AP
57M1-15	123AP
57M1-16	103A
57M1-17	160
57M1-18	103A
57M1-19	123AP
57M1-20	123AP
57M1-21	129
57M1-21A	129
57M1-22	129
57M1-23	123AP
57M1-24	123AP
57M1-25	129
57M1-25A	129
57M1-26	123AP
57M1-27	123AP
57M1-28	123AP
57M1-29	123AP
57M1-30	123AP
57M1-31	123AP
57M1-32	123AP
57M1-33	128
57M1-34	128
57M1-35	158
57M2-1	103A
57M2-2	103A
57M2-3	158
57M2-4	158
57M2-6	103A
57M2-7	128
57M2-8	158
57M2-9	103A
57M2-10	129
57M2-10A	129
57M2-11	128
57M2-14	128
57M2-15	129
57M2-15A	129
57M2-16	154
57M2-17	154
57M2-18	128
57M2-506(NPN)	103A
57M2-506(PNP)	102A
57M3-1	130
57M3-1A	130
57M3-2	130
57M3-3	128
57M3-4	130
57M3-4A	130
57M3-5	175
57M3-6	130
57M3-6A	130
57M3-7	104
57M3-8	104
57M3-9N	155
57M3-9P	131
57M3-10N	155
57M3-10P	131
57M3-11	155
57M3-12	131
57P1	102
57RECT-SI-154(AU)	552
57RECT-SI-1021	552
57RECT-SI-1021(AU)	552
57RECT-SI-1021AU	109
57RECT-1021	552
57S-06	5070A
57SI-HA11423	1471
57X11	505
57X14	116
57Z6	5178A
57Z6A	5178A
58-1	229
58-1(TRUETONE)	123AP
58B2-14	160
58S155325	5016A
58ST-2SA1029C	290A
58ST-2SC2344E	375
58ST-MPS9418AS	123AP
58SZ-RD6.2EB3	5013A
58Z6	5180A
58Z6A	5180A
59-1	112
59E001-1	177
59P2C	102A
59SD-1N34A	109
59SD-1N34A(AU)	109
59SD-1N34AAU	109
59Z6	5120A
59Z6A	5120A
60-3	116
60-211040	181
60C	116
60D	116
60DE10	125
60F1	5842
60F5	5862
60H	116
60H3P	5862
60H3PN	5863
60HB800	5344
60HF5	6020
60HF10	6022
60HF15	6026
60HF20	6026
60HF25	6030
60HF30	6030
60HF35	6034
60HF40	6034
60HF45	6038
60HF50	6038
60HF60	6040
60HF80	6042
60HF100	6044
60HFR10	6023
60HFR20	6027
60HFR30	6031
60HFR40	6035
60HFR43	6043
60HFR50	6039
60HFR60	6041
60HFR100	6045
60J1	5806
60J2	116
60J2P	5882
60J3P	5882
60JH3	6064
60LA	156
60M	116
60MQ30	6094
60MQ40	6094
60P19009	162
60P22204	191
60S05	5812
60S1	5812
60S2	5814
60S4	5814
60S5	5815
60S6	5815
60S8	5817
60S10	5817
60SB03S	6094
60SB04S	6094
60SZ-RD9.1EB2	5018A
60T4	5400
60Z6	5182A
60Z6A	5182A
61-259	109
61-309-458	128
61-607	102A
61-608	102A
61-654	102A
61-655	102A
61-656	102A
61-746	123AP
61-747	128
61-751	123AP
61-754	123AP
61-755	123AP
61-756	117
61-782	121
61-813	128
61-814	123AP
61-815	123AP
61-820	117
61-926	117
61-928	102A
61-929	102A
61-1053-1	196
61-1130	102A
61-1131	102A
61-1215	102A
61-1320	116
61-1400	123AP
61-1401	123AP
61-1402	123AP
61-1403	123AP
61-1404	123AP
61-1763	123AP
61-1764	128
61-1765	116
61-1906	131
61-1907	102A
61-1934	102A
61-1935	102A
61-3096-90	197
61-7728	116
61-8969	118
61-8969M	118
61-59395	109
61-260039	126

PART NUMBER	NTE REPLACEMENT
61-260039A	126
61-309449	130
61-309686	199
61-309687	128
61-309688	129
61-309689	152
61-309690	153
61A0001-10	1082
61A0001-11	1142
61A0001-12	1052
61A001-10	1082
61A001-11	1142
61A001-12	1052
61A030-6	712
61A030-9	1083
61A023-2	1045
61A66-10	HVD-3
61B002-1	160
61B003-1	126
61B004-1	102A
61B005-1	102A
61B006-1	102A
61B007-1	108
61B007-2	108
61B009-1	102A
61B0015-1	102A
61B020-1	102A
61B015-1	102A
61B016-1	102A
61B017-1	102A
61B018-1	102A
61B019-1	102A
61B021-1	102A
61B022-2	102A
61B022-3	102A
61B023-1	102A
61B026-1	102A
61B027-1	158
61B042-9	1003
61B2Z	783
61B45-14	102A
61C001-1	123
61C001-2	1123
61C001-4	1263
61C001-7	1266
61C001-9	1268
61C001-11	1269
61C001-12	1223
61C002-1	102
61C003-1	102
61C004-1	128
61C005-1	121
61C66-1	HVD-1
61C66-2	HVD-1
61C66-3	HVD-1
61C66-4	HVD-1
61C66-5	HVD-1
61C66-6	HVD-1
61C66-7	HVD-1
61C66-8	HVD-1
61C66-9	HVD-1
61C66-10	HVD-1
61D72-1	HVD-12
61D72-2	HVD-12
61D72-3	HVD-12
61E01	5075A
61E02	5022A
61E03	5066A
61E04	5093A
61E05	5070A
61E06	5096A
61E07	5075A
61E08	147A
61E09	5090A
61E10	5010A
61E11	5082A
61E12	146A
61E13	5068A
61E14	5096A
61E15	5018A
61E16	5095A
61E17	5001A
61E18	5027A
61E19	5067A
61E20	146A
61E21	5129A
61E22	5029A
61E23	5010A
61E24	5028A
61E25	5014A
61E26	5031A
61E27	5012A
61E28	5141A
61E30	148A
61E31	5022A
61E32	5016A
61E33	5027A
61E34	5117A
61E35	5137A
61E36	137A
61E37	5077A
61E38	136A
61E39	5135A
61E40	5010A
61E41	135A
61E42	5071A
61E43	5006A
61E44	5115A
61J001-1	123AP
61J002-1	123AP
61J003-1	123AP
61J004-1	102A
61J2	116
61K001-10	801
61K001-13	1185
61P1	126
61P1D	160
61P10	126
61T4	5401
61Z6	5122A
61Z6A	5122A
62-3597-1	106
62-3597-2	106
62-7567	123AP
62-8555	123AP
62-8781	160
62-10234	109
62-10655	109
62-12034	109
62-13258	102A
62-13259	103A
62-13261	116
62-13477	116
62-13494	102A
62-15318	109
62-15483	116
62-16013	113A
62-16711	116
62-16712	113A
62-16769	109
62-16841	109
62-16905	123AP
62-16918	102A
62-16919	175
62-17232	112
62-17390	160
62-17391	160
62-17550	123AP
62-18135	116
62-18337	113A
62-18415	100
62-18416	100
62-18417	100
62-18418	160
62-18419	160
62-18420	102A
62-18421	102A
62-18422	160
62-18423	100
62-18424	100
62-18425	123AP
62-18426	154
62-18427	104
62-18428	121
62-18429	179
62-18430	102A
62-18431	116
62-18434	116
62-18435	116
62-18436	116
62-18438	116
62-18641	123AP
62-18642	123AP
62-18643	123AP
62-18782	177
62-18828	123AP
62-19115	116
62-19260	112
62-19280	123AP
62-19452	159
62-19516	123AP
62-19548	123AP
62-19581	107
62-19620	112
62-19734	113A
62-19749	116
62-19814	116
62-19837	123AP
62-19838	123AP
62-19846	109
62-20154	159
62-20154A	159
62-20155	123AP
62-20223	177
62-20240	123AP
62-20241	123AP
62-20242	123AP
62-20243	123AP
62-20244	159
62-20244A	159
62-20319	177
62-20360	123AP
62-20437	177
62-20597	177
62-20643	145A
62-21369	116
62-21496	123AP
62-21552	177
62-21573	5103A
62-21574	5077A
62-21586	711
62-21587	712
62-21683	106
62-22038	123AP
62-22039	123AP
62-22250	123AP
62-22251	123AP
62-22524	106
62-22529	106
62-26597	177
62-26851	160
62-109474	113A
62-112524	109
62-113998	116
62-114267	107
62-118825	125
62-125528	177
62-126321	177
62-126856	116
62-127532	112
62-128343	100
62-129556	112
62-129604	107
62-130045	177
62-130046	177
62-130047	139A
62-130139	106
62-130761	145A
62-130762	145A
62-132497	106
62-134074	112
62A01	116
62A02	116
62A04	116
62A05	116
62A11868	123AP
62A11871	159
62B046-1	152
62B046-2	152
62B046-3	152
62B046-4	152
62J2	116
62N013B	229
62N031C	229
62R2R	5944
62ST-2SC458	85
62ST-2SC458C	85
62Z6	5124A
62Z6A	5124A
63-3954	160
63-5058	5105A
63-7246	158
63-7247	102A
63-7248	103A
63-7396	102A
63-7397	102A
63-7398	102A
63-7399	102A
63-7420	102A
63-7421	123AP
63-7433	116
63-7538	160
63-7541	160
63-7547	100
63-7548	160
63-7549	103A
63-7564	102A
63-7565	103A
63-7567	123AP
63-7579	160
63-7580	160
63-7581	160
63-7582	160
63-7596	102A
63-7660	160
63-7670	123AP
63-7871	102A
63-7872	102A
63-7873	102A
63-8119	160
63-8120	158
63-8376	160
63-8377	160
63-8378	160
63-8379	160
63-8380	102A
63-8381	109
63-8473	103A
63-8512	175
63-8555	123AP
63-8590	121
63-8685	116
63-8699	160
63-8700	160
63-8701	123AP
63-8702	123AP
63-8703	102A
63-8704	102A
63-8705	103A
63-8706	121
63-8707	130
63-8707A	130
63-8819	117
63-8824	116
63-8825	5072A
63-8945	175
63-8954	160
63-8955	109
63-8970	HVD-4
63-9072	160
63-9337	123AP
63-9338	123AP
63-9339	123AP
63-9340	103A
63-9341	123AP
63-9516	123AP
63-9517	160
63-9518	123AP
63-9519	102A
63-9520	102A
63-9521	102A
63-9522	614
63-9523	109
63-9659	102A
63-9664	160
63-9665	160
63-9782	614
63-9783	5072A
63-9787	117
63-9829	123AP
63-9830	123AP
63-9831	123AP
63-9832	123AP
63-9833	123AP
63-9847	123AP
63-9864	HVD-3
63-9876	160
63-9877	160
63-9893	HVD-3
63-9895	HVD-3
63-9895-1	HVD-12
63-9896	HVD-3
63-9896-01	HVD-3
63-9897	HVD-3
63-9898	HVD-3
63-9898-01	HVD-3
63-9941	160
63-9942	142A
63-10026-01	519
63-10035	160
63-10036	160
63-10037	102A
63-10038	102A
63-10062	175
63-10064	116
63-10145	160
63-10146	160
63-10147	102A
63-10148	160
63-10149	160
63-10150	160
63-10151	102A
63-10152	102A
63-10153	102A
63-10154	102A
63-10156	102A
63-10158	102A
63-10159	102A
63-10188	123AP
63-10195	160
63-10196	160
63-10200	100
63-10375	160
63-10376	160
63-10377	123AP
63-10378	121
63-10383	103A
63-10384	158
63-10408	102A
63-10708	123AP
63-10709	116
63-10725	123AP
63-10732	123AP
63-10733	123AP
63-10734	123AP
63-10735	123AP
63-10736	123AP
63-10737	123AP
63-10739	109
63-10860	123AP
63-11025	123AP
63-11055	160
63-11073	158
63-11074	109
63-11143	123AP
63-11144	102A
63-11147	5071A
63-11148	167
63-11215	117
63-11289	123AP
63-11290	175
63-11291	116
63-11468	123AP
63-11469	123AP
63-11470	123AP
63-11471	123AP
63-11472	123AP
63-11474	102A
63-11496	160
63-11497	158
63-11582	160
63-11584	160
63-11585	100
63-11586	102A
63-11659	5071A
63-11660	123AP
63-11661	102A
63-11757	123AP
63-11758	123AP
63-11759	123AP
63-11762	125
63-11825	123AP
63-11831	123AP
63-11832	123AP
63-11833	123AP
63-11834	614
63-11878	175
63-11879	109
63-11881	116
63-11916	123AP
63-11934	123AP
63-11935	123AP
63-11936	128
63-11937	123AP
63-11938	175
63-11957	116
63-11989	128
63-11990	185
63-11991	130
63-11991A	130
63-12003	123AP
63-12004	123AP
63-12062	123AP
63-12077	117
63-12110	5071A
63-12154	159
63-12154A	159
63-12156	159
63-12156A	159
63-12157	159
63-12157A	159
63-12158	109
63-12272	123AP
63-12273	162
63-12287	167
63-12316	102A
63-12317	102A
63-12366	125
63-12605	123AP
63-12607	109
63-12608	123AP
63-12609	123AP
63-12610	160
63-12641	123AP
63-12642	123AP
63-12645	109
63-12669	158
63-12670	158
63-12696	123AP
63-12697	123AP
63-12698	158
63-12706	123AP
63-12707	123AP
63-12750	123AP
63-12751	123AP
63-12752	123AP
63-12753	123AP
63-12754	109
63-12755	109
63-12756	109
63-12757	109
63-12874	123AP
63-12875	123AP
63-12876	102A
63-12877	123AP
63-12878	123AP
63-12879	123AP
63-12880	102A
63-12881	102A
63-12933	123AP
63-12940	123AP
63-12941	123AP
63-12942	123AP
63-12943	123AP
63-12944	123AP
63-12945	158
63-12946	123AP
63-12947	158
63-12948	123AP
63-12949	123AP
63-12950	123AP
63-12951	123AP
63-12952	123AP
63-12953	123AP
63-12954	175
63-12989	128
63-12990	128
63-13025	160
63-13080	109
63-13214	128
63-13215	128
63-13216	162
63-13322	159
63-13322A	159
63-13323	158
63-13419	123AP
63-13438	123AP
63-13440	123AP
63-13441	123AP
63-13839	160
63-13840	102A
63-13842	109
63-13864	123AP
63-13899	160
63-13903	116
63-13919	116
63-13926	132
63-13927	123AP
63-13954	162
63-14032	123AP
63-14051	123AP
63-14052	123AP
63-14057	123AP
63-14135	727
63-14195	116
63-15483	116
63-16918	102A
63-17390	160
63-18135	117
63-18416	100
63-18418	160
63-18419	160
63-18420	102A
63-18421	102A
63-18423	160
63-18424	160
63-18426	171
63-18427	104
63-18430	102A
63-18643	123AP
63-19280	123AP
63-19282	123AP
63-22724	109
63-23041	102A
63-25179	102A
63-25180	102A
63-25181	102A
63-25182	102A
63-25261	158
63-25281	102A
63-25282	102A
63-25342	110MP
63-25720	102A
63-25726	160
63-25727	102A
63-25728	102A
63-25729	102A
63-25933	109
63-25942	102A
63-25944	102A
63-25946	100
63-26382	109
63-26597	116
63-26849	100
63-26850	160
63-26851	102A
63-27278	100
63-27279	100
63-27280	100
63-27281	102A
63-27366	160
63-27367	100
63-27483	117
63-27500	160
63-27622	116
63-28250	109
63-28348	160
63-28358	160
63-28390	102A
63-28399	102A
63-28426	154
63-28888	109
63-29383	117
63-29451	121
63-29459	121
63-29461	123AP
63-29661	160
63-29662	100
63-29663	100
63-29664	100
63-29665	102A
63-29666	102A
63-29819	160
63-29820	160
63-29821	160
63-29862	160
63-29863	100
63-250128-2	112
63-250128-8	112
63-250128-12	112
63-250128-14	112
63-250128-16	112
63J2	116
63N1	163A
63N50	105
63P3	102
63RECT-S1-1021	552
63RECT-SI-1021	552
63Z6	5186A
63Z6A	5186A
64-1	109
64-570-10	435K64
64-8054-6	116
64-J2	116
64J2	116
64N1	162
64R2	5878
64RECT-S1-1001	116
64RECT-SI-1001	116
64RECT-SI-1001(AU)	116
64RECT-SI-1001AU	116
64RECT-U-1012	5305
64T1	100
64T4	5404
64Z6	5187A
64Z6A	5187A
65	116
65(DIODE)	116
65(TRANS)	107
65-080001	226MP
65-085002	109
65-085003	109
65-085004	142A
65-085010	109
65-085012	109
65-085013	116
65-1	123AP
65-1-70	160
65-1-70-12	160
65-1-70-12-7	160
65-1A	160
65-1A0	160
65-1A0R	160
65-1A1	160
65-1A2	160
65-1A3	160
65-1A3P	160
65-1A4	160
65-1A4-7	160
65-1A4-7B	160
65-1A5	160
65-1A5L	160
65-1A6	160
65-1A6-5	160
65-1A7	160
65-1A7-1	160
65-1A8	160
65-1A9	160
65-1A9G	160
65-1A19	160
65-1A21	160
65-1A82	160
65-1A0	160
65-1A0R	160
65-2	103A
65-2-70	103A
65-2-70-12	103A
65-2-70-12-7	103A
65-2A	103A
65-2A0	103A
65-2A0R	103A
65-2A1	103A
65-2A2	103A
65-2A3	103A
65-2A3P	103A
65-2A4	103A
65-2A4-7B	103A
65-2A4-7	103A
65-2A5	103A
65-2A5L	103A
65-2A6	103A
65-2A6-1	103A
65-2A7	103A
65-2A7-1	103A
65-2A8	103A
65-2A9	103A
65-2A9G	103A
65-2A19	103A
65-2A21	103A
65-2A82	103A
65-4	101
65-4-70	101
65-4-70-12-7	101
65-4-70-12	101
65-4A	101
65-4A0	101
65-4A0R	101
65-4A1	101
65-4A2	101
65-4A3	101
65-4A3P	101
65-4A4	101
65-4A4-7	101
65-4A4-7B	101
65-4A5	101
65-4A5L	101
65-4A6	101
65-4A6-2	101
65-4A7	101
65-4A7-1	101
65-4A8	101
65-4A9	101
65-4A9G	101
65-4A19	101
65-4A21	101
65-4A82	101
65-10	160
65-11	160
65-12	160
65-13	160
65-14	160
65-15	160
65-16	160
65-17	160
65-18	160
65-19	160
65-20	103A
65-21	103A
65-22	103A
65-23	103A
65-24	103A
65-25	103A
65-26	103A
65-27	103A
65-28	103A
65-29	103A
65-40	101
65-41	101
65-42	101
65-43	101
65-44	101
65-45	101
65-46	101
65-47	101
65-48	101
65-49	101
65-10838-01	5019A
65-11137-23	788
65-11502-03	123AP
65-20820-00	1117
65-33361-00	1248
65-45402-00	2060
65-80001	226
65-250128-12	112
65-K11305-0001	519
65-L11305-0001	519
65-L11324-0001	519
65-P11305-0001	519
65-P11308-0001	177
65-P11311-0001	177
65-P11324-0001	519
65-P11325-0001	519
65A	159
65A0	160
65A1	160
65A2	160
65A3	160
65A4	160
65A5	160
65A6	160
65A7	160
65A8	160
65A9	160
65A10	160
65A10R	160
65A12	160
65A13	160
65A13P	160

PART NUMBER	NTE REPLACEMENT
65A14	160
65A14-7	160
65A14-7B	160
65A15	160
65A15L	160
65A16	160
65A16-3	160
65A17	160
65A17-1	160
65A18	160
65A19	160
65A19G	160
65A119	160
65A121	160
65A182	160
65A11573	199
65A-70	160
65A-70-12	160
65A-70-12-7	160
65B	159
65B1	126
65B3	126
65B4	126
65B5	126
65B6	126
65B7	126
65B8	126
65B9	126
65B10	126
65B10R	126
65B11	126
65B12	126
65B13	126
65B13P	126
65B14	126
65B14-7	126
65B14-7B	126
65B15	126
65B15L	126
65B16	126
65B16-2	126
65B17	126
65B17-1	126
65B18	126
65B19	126
65B19G	126
65B119	126
65B121	126
65B182	126
65B-70	126
65B-70-12	126
65B-70-12-7	126
65B0	126
65C	159
65C0	121
65C01	160
65C02	160
65C03	160
65C1	159
65C2	121
65C3	121
65C4	121
65C5	121
65C6	121
65C7	121
65C8	121
65C9	121
65C10	121
65C10R	121
65C11	121
65C12	121
65C13	121
65C13P	121
65C14	121
65C14-7	121
65C14-7B	121
65C15	121
65C15L	121
65C16	121
65C16-4	121
65C17	121
65C17-1	121
65C18	121
65C19	121
65C19G	121
65C119	121
65C121	121
65C182	121
65C-70	121
65C-70-12	121
65C-70-12-7	121
65D	159
65D1	159
65E	159
65E1	159
65F	159
65F1	159
65J2	116
65P117	116
65P124	116
65P124-1	116
65P124-2	116
65P153	116
65P155	116
65P206	116
65P284	116
65P297	116
65ST-2SA733R	290A
65ST-2SC454B	85
65T1	102A
65Z6	5188A
65Z6A	5188A
66-1	102A
66-1-70	102A
66-1-70-12	102A
66-1-70-12-7	102A
66-1A	102A
66-1A0	102A
66-1A0R	102A
66-1A1	102A
66-1A2	102A
66-1A3	102A
66-1A3P	102A
66-1A4	102A
66-1A4-7	102A
66-1A4-7B	102A
66-1A5	102A
66-1A5L	102A
66-1A6	102A
66-1A6-3	102A
66-1A7	102A
66-1A7-1	102A
66-1A8	102A
66-1A9	102A
66-1A9G	102A
66-1A19	102A
66-1A21	102A
66-1A82	102A
66-1AA19	158
66-2	102A
66-2-70	102A
66-2-70-12	102A
66-2-70-12-7	102A
66-2A	102A
66-2A0	102A
66-2A0R	102A
66-2A1	102A
66-2A2	102A
66-2A3	102A
66-2A3P	102A
66-2A4	102A
66-2A4-7B	102A
66-2A4-7	102A
66-2A5	102A
66-2A5L	102A
66-2A6	102A
66-2A6-4	102A
66-2A7	102A
66-2A7-1	102A
66-2A8	102A
66-2A9	102A
66-2A9G	102A
66-2A19	102A
66-2A21	102A
66-2A82	102A
66-3	102A
66-3-70	102A
66-3-70-12	102A
66-3-70-12-7	102A
66-3A	102A
66-3A0	102A
66-3A0R	102A
66-3A1	102A
66-3A2	102A
66-3A3	102A
66-3A3P	102A
66-3A4	102A
66-3A4-7	102A
66-3A4-7B	102A
66-3A5	102A
66-3A5L	102A
66-3A6	102A
66-3A6C	102A
66-3A7	102A
66-3A7-1	102A
66-3A8	102A
66-3A9	102A
66-3A9G	102A
66-3A19	102A
66-3A21	102A
66-3A82	102A
66-10	102A
66-11	102A
66-12	102A
66-13	102A
66-14	102A
66-15	102A
66-16	102A
66-17	102A
66-18	102A
66-19	102A
66-20	102A
66-21	102A
66-22	102A
66-23	102A
66-24	102A
66-25	102A
66-26	102A
66-27	102A
66-28	102A
66-29	102A
66-30	102A
66-31	102A
66-32	102A
66-33	102A
66-34	102A
66-35	102A
66-36	102A
66-37	102A
66-38	102A
66-1011-01	123AP
66-2246	116
66-6023	102A
66-6023-00	102A
66-6024-00	102A
66-6025-00	102A
66-6026-00	102A
66-6027-00	102A
66-6028-00	102A
66-6030-00	116
66-6031-00	116
66-6033	102A
66-8504	125
66-10021-01	159
66-10815-01	128
66-10816-01	123AP
66-10817-01	159
66-10818-01	123AP
66-10820-01	129
66-10821-01	287
66-10822-01	285
66-10823-01	284
66-10824-01	197
66-10825-01	196
66-11502-02	123AP
66-11502-03	123AP
66-11702-11	123A
66-19013-07J	123AP
66-19014-03J	123AP
66-19014-035	123AP
66-19400-00	184
66-19400-01	184
66-20324-00	395
66-20438-00	153
66-29015-03J	159
66-29015-035	159
66-127119	123AP
66-F29-1	123AP
66-P11I20	159
66-P11I12-0001	199
66-P11I20	159
66-P11139	129
66-P11141	129
66A00010A	123AP
66A00008A	123AP
66A96-1	500A
66A10298	128
66A10310	234
66A10319	519
66B-3A5L	121MP
66F001	116
66F001-1	116
66F020-1	157
66F020-2	157
66F015	704
66F016-1	177
66F016-2	177
66F017	178MP
66F018	177
66F021-1	161
66F022-1	161
66F023-1	159
66F024-1	159
66F025-1	128
66F026-1	199
66F027-1	123AP
66F028-1	123AP
66F029-1	123AP
66F039-1	172A
66F039-2	172A
66F041-1	159
66F042-1	161
66F057-1	123AP
66F057-2	123AP
66F058-2	188
66F069-1	188
66F069-2	189
66F074-1	171
66F074-2	171
66F074-3	171
66F074-4	171
66F077-1	712
66F112-1	522
66F112-2	522
66F133-1	198
66F159-1	523
66F159-2	523
66F159-3	523
66F181-1	522
66F1551	738
66F-001	116
66F-001-1	116
66F-010	152
66F-054-1	522
66F-054-2	522
66F-054-3	522
66F-054-4	500A
66F-084-1	312
66F-112-1	522
66F-112-2	522
66F-181-1	522
66J2	116
66M	123AP
66R2	5882
66R2S	5883
66S00000A	128
66ST-2SC1514BK	376
66SZ-RD10EB3	5019A
66X0007-104	108
66X0020-000	109
66X0020-001	109
66X0040-003	137A
66X0040-004	5084A
66X0040-005	140A
66X0040-005(BRADFORD	139A
66X0040-007	5081A
66X0040-008	5100A
66X0040-009	145A
66X0040-011	5068A
66X0040-012	149A
66X0040-019	5007A
66X0040-021	5044A
66X0040-031	5031A
66X0050-001	614
66X0060-001	522
66X0060-002	522
66X0070-001	177
66X0023-001	116
66X0023-002	116
66X0023-003	116
66X0023-004	116
66X0023-005	116
66X0023-006	116
66X0023-007	116
66X0023-008	116
66X0023-009	125
66X0023-1	116
66X0024-000	113A
66X0025-000	113A
66X0025-000-001	113A
66X0025-000,001	113A
66X0025-001	113A
66X0028-001	116
66X0028-008	125
66X0033-000	116
66X0033-001	116
66X0035-000	118
66X0035-001	118
66X0036-001	506
66X0036-002	506
66X0037-001	116
66X0038-001	506
66X0039-001	109
66X0041-001	120
66X0043-001	177
66X0044-001	177
66X0044-100	177
66X0046-001	519
66X0047-001	109
66X0047-901	109
66X0048-001	177
66X0049-001	194
66X0049-001(DIODE)	110MP
66X0049-002	109
66X0049-100	110MP
66X0051-001	109
66X0056-001	177
66X0062-001	177
66X0068-002	506
66X0069-001	177
66X0071-001	116
66X0073-001	156
66X041-001	116
66X053-001	116
66X19	116
66X20	109
66X21	113A
66X23	116
66X24	116
66X25	113A
66X25-0	113A
66X26	116
66X29	177
66X36-1	506
66X41-1	120
66X218	113A
66XZ18	113A
66Z6	5128A
66Z6A	5128A
67-01603-01	1738
67-1000-00	116
67-1003-00	116
67-10430-01	615P
67-30201-05	614
67-30321-05	618
67-31043-05	610
67-31212-04	5021A
67-32009-01	1547
67-32109-02	1572
67-32720-01	4000
67-32720-02	4027B
67-32808-02	1677
67-34002-06	116
67-34003-06	116
67-34148-07	519
67-35221-04	5010A
67-35402-06	5802
67-39221-04P	5018A
67-40060-01	109
67-40060-02	109
67-51703-02	1402
67-53315-01	15029
67-90430-01	615P
67-93401-01	1800
67-93501-01	1801
67A8926	234
67A9060	199
67J2	125
67J2A	125
67P1	121
67P1C	121
67P2	121
67P2C	121
67P3	121
67P3C	121
67SD-1N34A	109
67Z6	5129A
67Z6A	5129A
68 A 8318-P1	159
68-110-02	159
68A7252	177
68A7349-D32	9932
68A7349-D46	9946
68A7349-D62	9962
68A7349-PD32	9932
68A7349PD30	9930
68A7349PD36	9936
68A7349PD45	9945
68A7349PD46	9946
68A7349PD62	9962
68A7355P1	234
68A7366-1	199
68A7368	128
68A7370-1	159
68A7370-P3	159
68A7380-1	123AP
68A7380-2	128
68A7382-P1	159
68A7672P1	941
68A7702P1	194
68A7715P1	123AP
68A7734P1	159
68A7860-P1	923
68A8318-P1	159
68A8321	123AP
68A9025	7400
68A9026	74H00
68A9027	7402
68A9028	7404
68A9030	7410
68A9031	74H10
68A9032	7406
68A9033	7420
68A9034	7423
68A9035	7430
68A9036	7437
68A9037	7438
68A9038	7450
68A9040	7460
68A9041	7475
68A9042	7476
68A9048	74151
68A9049	74153
68A8319001	130
68P1	121
68P1B	121
68P-2A5L	102A
68R2	5886
68R2S	5886
68ST-2SD819	389
68ST-MPS9700E	123AP
68SZ-12FB3	142A
68SZ-RD12FB3	142A
68X0040-005	140A
68Z6	5130A
68Z6A	5130A
69-02006-02	3098
69-001	230
69-102	179
69-112	179
69-1810	123AP
69-1811	123AP
69-1812	123AP
69-1813	123AP
69-1814	128
69-1815	106
69-1816	199
69-1817	106
69-1818	184
69-1819	185
69-1820	109
69-1821	614
69-1822	177
69-1823	116
69-2246	116
69-2922	109
69A49728-P1	177
69AJ110	218
69L-4A5L	102A
69N1	108
69SP112	129
70.00.730	160
70.01.704	199
70-943-083-002	519
70-943-083-003	519
70-943-722-001	123AP
70-943-754-002	123AP
70-943-762-001	123AP
70-943-772-002	123AP
70-943-773-001	234
70-270050	125
70B1Z	714
70C70F	5579
70C80BF	5579
70C80F	5579
70C90BF	5579
70C90F	5579
70C100BF	5579
70C100F	5579
70C110BF	5579
70C110F	5579
70C120BF	5579
70C120F	5579
70F40	116
70H5	6050
70H5A	6050
70H5AR	6051
70H5R	6051
70H10	6050
70H10A	6050
70H10AR	6051
70H10R	6051
70H15	6054
70H15A	6054
70H15AR	6055
70H15R	6055
70H20	6054
70H20A	6054
70H20AR	6055
70H20R	6055
70H25	6058
70H25A	6058
70H25AR	6059
70H25R	6059
70H30	6058
70H30A	6058
70H30AR	6059
70H30R	6059
70H40	6060
70H40A	6060
70H40AR	6061
70H40R	6061
70H50	6064
70H50A	6064
70H50AR	6065
70H50R	6065
70H60	6064
70H60A	6064
70H60AR	6065
70H60R	6065
70H70	6068
70H70A	6068
70H70AR	6069
70H70R	6069
70H80	6068
70H80A	6068
70H80AR	6069
70H80R	6069
70H90	6072
70H90A	6072
70H90AR	6073
70H90R	6073
70H100	6072
70H100A	6072
70H100AR	6073
70H100R	6073
70H120A	6078
70HF10	6050
70HF20	6054
70HF40	6060
70HF60	6064
70HF80	6068
70HF100	6072
70HFR10	6051
70HFR20	6055
70HFR40	6061
70HFR60	6065
70HFR80	6069
70HFR100	6073
70HR5	6049
70HR5A	6075
70HR10	6051
70HR10A	6075
70HR15	6055
70HR15A	6075
70HR20	6055
70HR20A	6075
70HR25	6059
70HR25A	6077
70HR30	6059
70HR30A	6077
70HR40	6061
70HR40A	6077
70HR50	6065
70HR50A	6077
70HR60	6065
70HR60A	6077
70HR70	6069
70HR70A	6079
70HR80	6069
70HR80A	6079
70HR90	6073
70HR90A	6079
70HR100	6073
70HR100A	6079
70HR120A	6079
70N1	123AP
70N1M	199
70N2	123
70N3	107
70N4	123AP
70R2S	5890
70S40	116
70ST-2SC945Q	85
70T40	116
70U10	6354
70U10R	6355
70U15A	6354
70U15AR	6355
70U20	6354
70U20R	6355
70U25A	6354
70U25AR	6355
70U40	6354
70U40R	6355
70U60	6356
70U60R	6357
70U70A	6358
70U70AR	6359
70U80	6358
70U80R	6359
70U90A	6358
70U90AR	6359
70U100	6358
70U100R	6359
70UW15	6354
70UW15R	6355
70UW25	6354
70UW25R	6355
70UW35	6354
70UW35R	6355
70UW45	6356
70UW45R	6357
70UW65	6358
70UW65R	6359
71-13/51/60	519
71-70177A03	738
71-70177A05	749
71-70177B02	743
71-126268	123AP
71D70177A03	738
71M70177A03	738
71N1	124
71N1B	123AP
71N1T	124
71N2	124
71N2T	124
71RA30	5572
71RA50	5572
71RA60	5572
71RA80	5574
71RA100	5574
71RA120	5574
71RECT-SI-1019	506
71ST-2SC1505L	198
71SZ-RD12B(AU)	5021A
71SZ-UZ-12B	5021A
71T2	171
72-028-9-002	306
72-4	196
72-5	197
72-7	290A
72-8	293
72-9	506
72-11	116
72-15	116
72-18	177
72N1	108
72N1B	128
72N2	108
72N2B	123AP
72RA80	5579
72RA100	5579
72RA120	5579
72RB80	5579
72RB100	5579
72RB120	5579
72RC80A	5579
72REH80	5579
72REH100	5579
72REH110	5579
72REH120	5579
72SI-TA7074P	749
72ST-2SD900B	89
72ST-2SC900B	89
72ST-2SD900B	89
72ST-MPS9750F	159
72ST-MPS9750G	159
72ST-MPS9750G/F	290A
72Z	116
73-15	145A
73-17	5075A
73-22	5077A
73-31	136A
73-44	5011A
73-B143-096-3	852
73-B143-096-2	852
73-B143-096-1	852
73-B143-096-4	852
73-B143096-1	852
73-B143096-2	852
73-B143096-3	852
73-B143096-4	852
73A01	176
73A02	176
73A03	126
73A60-11	506
73A64-1	178MP
73B140-004	127
73B140385-001	128
73B140585-21	194
73B140585-22	194
73B140585-23	194
73B140585-24	194
73B140585-25	194
73B140585-26	194
73B140585-27	194
73B-140-003-5	123AP
73B-140-005-1	159
73B-140005-4	159
73C18028-11	152
73C180475	712
73C180475-1	712
73C180475-4	712
73C180475-7	712
73C180475-8	712
73C180475-9	712
73C180476-5	712
73C180497-4	154
73C180499-5	154
73C180499-6	154
73C180828-12	152
73C180829-11	152
73C180829-12	152
73C180830-11	153
73C180830-12	153
73C180831-1	159
73C180831-2	159
73C180831-3	234
73C180838-1	749
73C180838-2	749
73C180838-3	749
73C180843	783
73C180843-1	783
73C180843-2	783
73C180843-3	783
73C180843-4	783
73C182037-2	HVD-4

PART NUMBER	NTE REPLACEMENT
73C182051	522
73C182080-33	154
73C182081-31	123AP
73C182082-31	159
73C182088-31	154
73C182186	712
73C182186-1	712
73C182186-2	712
73C182186-3	712
73C182186-4	712
73C182626-1	HVD-4
73C182629-2	HVD-4
73C182629-3	HVD-4
73C182629-4	HVD-4
73C182629-5	HVD-4
73C182629-6	HVD-4
73C182629-7	HVD-4
73C182764-1	738
73C182764-2	738
73C182764-4	738
73C180475004	712
73N1	161
73N1B	123AP
73N51	105
73SI-MC135P	712
73SI-MC1353P	1080
73SI-MC1358P	712
73ST-2SC945R(AU)E	85
73ST-2SC1921-03	399
73T2	171
73Z6	5240A
73Z6A	5240A
74	108
74-005-013	74LS367
74-01-772	199
74-3	100
74-3-70	100
74-3-70-12	100
74-3-70-12-7	100
74-3A	100
74-3A0	100
74-3A0R	100
74-3A1	100
74-3A2	100
74-3A3	100
74-3A3P	100
74-3A4	100
74-3A4-7	100
74-3A4-7B	100
74-3A5	100
74-3A5L	100
74-3A6	100
74-3A6-3	100
74-3A7	100
74-3A7-1	100
74-3A8	100
74-3A9	100
74-3A9G	100
74-3A19	100
74-3A21	100
74-3A82	100
74-30	100
74-31	100
74-32	100
74-33	100
74-34	100
74-35	100
74-36	100
74-37	100
74-38	100
74-39	100
74=ST-2SC1906(AP)	107
74=ST-2SD1138C	375
74A01	176
74A02	176
74A03	176
74C00	74C00
74C00N	74C00
74C02	74C02
74C02N	74C02
74C04	74C04
74C04N	74C04
74C08	74C08
74C10	74C10
74C10N	74C10
74C14	74C14
74C20N	74C20
74C30N	74C30
74C32	74C32
74C32N	74C32
74C73N	74C73
74C74	74C74
74C74N	74C74
74C76	74C76
74C93	74C93
74C151	74C151
74C154N	74C154
74C161	74C161
74C161N	74C161
74C174	74C174
74C175N	74C175
74C373	74C373
74C374	74C374
74C922	74C922
74C923	74C923
74C925	74C925
74H00	74H00
74H00DC	74H00
74H00N	74H00
74H00PC	74H00
74H01DC	74H01
74H01PC	74H01
74H04PC	74H04
74H05PC	74H05
74H08PC	74H08
74H10	74H10
74H10DC	74H10
74H10PC	74H10
74H11DC	74H11
74H11PC	74H11
74H20DC	74H20
74H20PC	74H20
74H21DC	74H21
74H21PC	74H21
74H22	74H22
74H22/9H22	74H22
74H22DC	74H22
74H22PC	74H22
74H30DC	74H30
74H30PC	74H30
74H40PC	74H40
74H50DC	74H50
74H50FC	74H50
74H50PC	74H50
74H51DC	74H51
74H51PC	74H51
74H52DC	74H52
74H52PC	74H52
74H53DC	74H53
74H53PC	74H53
74H54DC	74H54
74H54PC	74H54
74H55DC	74H55
74H55PC	74H55
74H60DC	74H60
74H60PC	74H60
74H61DC	74H61
74H61PC	74H61
74H62DC	74H62
74H62PC	74H62
74H71DC	74H71
74H71PC	74H71
74H72DC	74H72
74H72PC	74H72
74H73DC	74H73
74H73PC	74H73
74H74DC	74H74
74H74PC	74H74
74H76DC	74H76
74H76PC	74H76
74H78DC	74H78
74H78PC	74H78
74H87DC	74H87
74H87PC	74H87
74H101DC	74H101
74H101PC	74H101
74H102DC	74H102
74H102PC	74H102
74H103DC	74H103
74H103PC	74H103
74H108DC	74H108
74H108PC	74H108
74H183DC	74H183
74H183PC	74H183
74L365A	74LS365A
74L00	74LS00
74L00CH	74LS00
74L00DC	74LS00
74L00J	74LS00
74L00N	74LS00
74L00NA	74LS00
74L00PC	74LS00
74L00W	74LS00
74L01	74LS01
74L02	74LS02
74L02CH	74LS02
74L02DC	74LS02
74L02J	74LS02
74L02N	74LS02
74L02N(2)	74LS02
74L02PC	74LS02
74L02W	74LS02
74L03	74LS03
74L03CH	74LS03
74L03DC	74LS03
74L03J	74LS03
74L03PC	74LS03
74L03W	74LS03
74L04	74LS04
74L04N	74LS04
74L04P	74LS04
74L04PC	74LS04
74L05	74LS05
74L05N	74LS05
74L05PC	74LS05
74L06	74LS06
74L08	74LS08
74L08N	74LS08
74L08NA	74LS08
74L08PC	74LS08
74L08W	74LS08
74L09	74LS09
74L09DB	74LS09
74L09PC	74LS09
74L10	74LS10
74L10CH	74LS10
74L10DC	74LS10
74L10J	74LS10
74L10N	74LS10
74L10PC	74LS10
74L10W	74LS10
74L11	74LS11
74L11CH	74LS11
74L11DC	74LS11
74L11J	74LS11
74L11PC	74LS11
74L11W	74LS11
74L12	74LS12
74L12J	74LS12
74L13	74LS13
74L13N	74LS13
74L14	74LS14
74L14N	74LS14
74L14PC	74LS14
74L15	74LS15
74L15DC	74LS151
74L20	74LS20
74L20CH	74LS20
74L20DC	74LS20
74L20J	74LS20
74L20N	74LS20
74L20PC	74LS20
74L20W	74LS20
74L21	74LS21
74L21J	74LS21
74L22	74LS22
74L26	74LS26
74L27	74LS27
74L27CH	74LS27
74L27DC	74LS27
74L27J	74LS27
74L27PC	74LS27
74L27W	74LS27
74L28	74LS28
74L30	74LS30
74L30CH	74LS30
74L30DC	74LS30
74L30J	74LS30
74L30PC	74LS30
74L30W	74LS30
74L32	74LS32
74L32CH	74LS32
74L32DC	74LS32
74L32J	74LS32
74L32N	74LS32
74L32P	74LS32
74L32PC	74LS32
74L32W	74LS32
74L33	74LS33
74L33N	74LS33
74L37	74LS37
74L38	74LS38
74L38CH	74LS38
74L38J	74LS38
74L38N	74LS38
74L38W	74LS38
74L42	74LS42
74L42CH	74LS42
74L42DC	74LS42
74L42J	74LS42
74L42PC	74LS42
74L42W	74LS42
74L47	74LS47
74L48	74LS48
74L51	74LS51
74L51CH	74LS51
74L51DC	74LS51
74L51J	74LS51
74L51PC	74LS51
74L51W	74LS51
74L54	74LS54
74L55	74LS55
74L73	74LS73
74L73CH	74LS73
74L73J	74LS73
74L73W	74LS73
74L74	74LS74A
74L74A	74LS74A
74L74AN	74LS74A
74L74APC	74LS74A
74L74CH	74LS74A
74L74J	74LS74A
74L74PC	74LS74A
74L74W	74LS74A
74L75	74LS75
74L75CH	74LS75
74L75J	74LS75
74L75W	74LS75
74L76	74LS76A
74L78	74LS78
74L78DB	74LS78
74L78PC	74LS78
74L83A	74LS83A
74L83ACH	74LS83A
74L83ADC	74LS83A
74L83AJ	74LS83A
74L83APC	74LS83A
74L83AW	74LS83A
74L85	74LS85
74L85CH	74LS85
74L85DC	74LS85
74L85J	74LS85
74L85PC	74LS85
74L85W	74LS85
74L86	74LS86
74L86CH	74LS86
74L86DC	74LS86
74L86J	74LS86
74L86N	74LS86
74L86PC	74LS86
74L86W	74LS86
74L90	74LS90
74L90PC	74LS90
74L91	74LS91
74L92	74LS92
74L92DB	74LS92
74L92PC	74LS92
74L93	74LS93
74L93N	74LS93
74L93PC	74LS93
74L95	74LS95B
74L95A	74LS95B
74L95B	74LS95B
74L107	74LS107
74L107CH	74LS107
74L107DC	74LS107
74L107J	74LS107
74L107PC	74LS107
74L107W	74LS107
74L109	74LS109A
74L109CH	74LS109A
74L109DC	74LS109A
74L109J	74LS109A
74L109PC	74LS109A
74L109W	74LS109A
74L112	74LS112A
74L112A	74LS112A
74L112PC	74LS112A
74L113	74LS113
74L113DB	74LS113
74L113PC	74LS113
74L114	74LS114
74L114DB	74LS114
74L114PC	74LS114
74L122	74LS122
74L123	74LS123
74L123CH	74LS123
74L123J	74LS123
74L123N	74LS123
74L123W	74LS123
74L125	74LS125A
74L125A	74LS125A
74L125AN	74LS125A
74L125APC	74LS125A
74L126	74LS126A
74L126DB	74LS126A
74L126N	74LS126A
74L126PC	74LS126A
74L132	74LS132
74L132N	74LS132
74L132PC	74LS132
74L133	74LS133
74L133PC	74LS133
74L136	74LS136
74L136CH	74LS136
74L136DC	74LS136
74L136J	74LS136
74L136PC	74LS136
74L136W	74LS136
74L138	74LS138
74L138N	74LS138
74L138P	74LS138
74L138PC	74LS138
74L139	74LS139
74L139N	74LS139
74L139PC	74LS139
74L144PC	74LS244
74L145	74LS145
74L147	74LS147
74L148	74LS148
74L148J	74LS148
74L151	74LS151
74L151PC	74LS151
74L153	74LS153
74L153N	74LS153
74L153PC	74LS153
74L155	74LS155
74L155N	74LS155
74L155PC	74LS155
74L156	74LS156
74L156BM	74LS156
74L156PC	74LS156
74L157	74LS157
74L157N	74LS157
74L157PC	74LS157
74L158	74LS158
74L158BM	74LS158
74L158PC	74LS158
74L160	74LS160A
74L160A	74LS160A
74L160AF	74LS160A
74L160PC	74LS160A
74L161	74LS161A
74L161AN	74LS161A
74L161CH	74LS161A
74L161DC	74LS161A
74L161J	74LS161A
74L161N	74LS161A
74L161PC	74LS161A
74L161W	74LS161A
74L162	74LS162A
74L163	74LS163A
74L163CH	74LS163A
74L163DC	74LS163A
74L163J	74LS163A
74L163PC	74LS163A
74L163W	74LS163A
74L164	74LS164
74L164N	74LS164
74L164PC	74LS164
74L165	74LS165
74L165PC	74LS165
74L166	74LS166
74L168	74LS168A
74L168A	74LS168A
74L169	74LS169A
74L169A	74LS169A
74L169PC	74LS169A
74L170	74LS170
74L173	74LS173A
74L173PC	74LS173A
74L174	74LS174
74L174PC	74LS174
74L175	74LS175
74L175DC	74LS175
74L175N	74LS175
74L175PC	74LS175
74L181	74LS181
74L190	74LS190
74L191	74LS191
74L191CH	74LS191
74L191J	74LS191
74L191N	74LS191
74L191PC	74LS191
74L191W	74LS191
74L192	74LS192
74L193	74LS193
74L193CH	74LS193
74L193DC	74LS193
74L193J	74LS193
74L193N	74LS193
74L193PC	74LS193
74L193W	74LS193
74L194	74LS194
74L194A	74LS194A
74L195	74LS195A
74L195A	74LS195A
74L195APC	74LS195A
74L196	74LS196
74L196DB	74LS196
74L196PC	74LS196
74L197	74LS197
74L197DB	74LS197
74L197PC	74LS197
74L221	74LS221
74L221CH	74LS221
74L221J	74LS221
74L221N	74LS221
74L221W	74LS221
74L240	74LS240
74L240N	74LS240
74L240PC	74LS240
74L241	74LS241
74L241N	74LS241
74L242	74LS243
74L243	74LS243
74L243N	74LS243
74L244	74LS244
74L244N	74LS244
74L244PC	74LS244
74L245	74LS245
74L245N	74LS245
74L245NA	74LS245
74L245PC	74LS245
74L247	74LS247
74L248	74LS248
74L249	74LS249
74L251	74LS251
74L251DC	74LS251
74L251PC	74LS251
74L253	74LS253
74L257	74LS257
74L257A	74LS257
74L257AN	74LS257
74L257APC	74LS257
74L257BN	74LS257
74L258	74LS258
74L258AN	74LS258
74L258N	74LS258
74L259	74LS259
74L259DC	74LS259
74L259N	74LS259
74L259PC	74LS259
74L260	74LS260
74L266	74LS266
74L266CH	74LS266
74L266DC	74LS266
74L266J	74LS266
74L266PC	74LS266
74L266W	74LS266
74L273	74LS273
74L273DC	74LS273
74L273N	74LS273
74L273PC	74LS273
74L279	74LS279
74L280	74LS280
74L283	74LS283
74L283BM	74LS283
74L283PC	74LS283
74L290	74LS290
74L290PC	74LS290
74L293	74LS293
74L293PC	74LS293
74L295	74LS295A
74L295A	74LS295A
74L295J	74LS295
74L298	74LS298
74L299	74LS299
74L352	74LS352
74L353	74LS353
74L353DC	74LS353
74L353PC	74LS353
74L363	74LS363
74L364	74LS364
74L365	74LS365A
74L365A	74LS365A
74L365APC	74LS365A
74L365BM	74LS365A
74L367	74LS367
74L367A	74LS367
74L367APC	74LS367
74L367PC	74LS367
74L368	74LS368
74L368A	74LS368
74L373	74LS373
74L373DC	74LS373
74L373N	74LS373
74L373PC	74LS373
74L374	74LS374
74L374N	74LS374
74L374P	74LS374
74L374PC	74LS374
74L377	74LS377
74L377DC	74LS377
74L377N	74LS377
74L377PC	74LS377
74L378	74LS378
74L378DC	74LS378
74L379	74LS379
74L379DC	74LS379
74L379PC	74LS379
74L386	74LS386
74L390	74LS390
74L390DC	74LS390
74L390PC	74LS390
74L393	74LS393
74L393DC	74LS393
74L393N	74LS393
74L393NA	74LS393
74L393PC	74LS393
74L395	74LS395A
74L395A	74LS395A
74L395DC	74LS395A
74L395PC	74LS395A
74L398	74LS398
74L399	74LS399
74L399PC	74LS399
74L445	74LS445
74L490	74LS490
74L490PC	74LS490
74L540	74LS540
74L540DC	74LS540
74L540PC	74LS540
74L541	74LS541
74L541DC	74LS541
74L541N	74LS541
74L541PC	74LS541
74L626	74LS626
74L629N	74LS629
74L640	74LS640
74L641	74LS641
74L642	74LS642
74L645	74LS645
74L670	74LS670
74L670PC	74LS670
74N1	123AP
74P1	159
74P1M	129
74Q1262	160
74Q22881	226MP
74S00	74S00
74S00DC	74S00
74S00N	74S00
74S00PC	74S00
74S02	74S02
74S02PC	74S02
74S03DC	74S03
74S03PC	74S03
74S04	74S04
74S04PC	74S04
74S05	74S05
74S05PC	74S05
74S08	74S08
74S08DC	74S08
74S08PC	74S08
74S09DC	74S09
74S09PC	74S09
74S10	74S10
74S10DC	74S10
74S10PC	74S10
74S11	74S11
74S11DC	74S11
74S11PC	74S11
74S15	74S15
74S15DC	74S15
74S15PC	74S15
74S20	74S20
74S20DC	74S20
74S20PC	74S20
74S22DC	74S22
74S22PC	74S22
74S30DC	74S30
74S30PC	74S30
74S37	74S37
74S38	74S38
74S40PC	74S40
74S51	74S51
74S51DC	74S51
74S51N	74S51
74S51NA	74S51
74S51PC	74S51
74S64	74S64
74S64DC	74S64
74S64PC	74S64
74S65DC	74S65
74S65PC	74S65
74S74	74S74
74S74DC	74S74
74S74PC	74S74
74S86DC	74S86
74S86PC	74S86
74S112	74S112
74S112A	74S112
74S112DC	74S112
74S112N	74S112
74S112PC	74S112
74S113DC	74S113
74S113PC	74S113
74S114DC	74S114
74S114PC	74S114
74S124	74S124
74S132PC	74S132
74S132PCN	74S132
74S133DC	74S133
74S133N	74S133
74S133PC	74S133
74S134DC	74S134
74S134PC	74S134
74S138	74S138
74S138DC	74S138
74S138PC	74S138
74S140	74S140
74S140PC	74S140
74S151	74S151
74S151DC	74S151
74S151PC	74S151
74S153DC	74S153
74S153PC	74S153
74S157DC	74S157
74S157PC	74S157
74S158	74S158
74S158DC	74S158
74S158PC	74S158
74S163	74S163
74S174	74S174
74S174N	74S174
74S174NA	74S174
74S174PC	74S174
74S175DC	74S175
74S175N	74S175
74S175PC	74S175
74S181DC	74S181
74S181PC	74S181
74S188	74S188
74S188N	74S188
74S189	74S189
74S189J	74S189
74S189N	74S189
74S189PC	74S189
74S194DC	74S194
74S194PC	74S194
74S251DC	74S251
74S257	74S257
74S258DC	74S258
74S260	74S260
74S280	74S280
74S287	74S287
74S288	74S288
74S374	74S374
74S374J	74S374
74S374N	74S374
74S387	74S387
74S472	74S472
74S474	74S474
74S475	74S475
74S570	74S570
74S571	74S571
74S572	74S572
74S573	74S573
74SL86PCP	74LS86
74SL181	74LS181
74ST-2SA1015(AU)E	290A
74ST-2SC763D	107
74ST-2SC785-0	229
74ST-2SC1906	107
74ST-2SC1906(AP)	107
74ST-2SC1906AP	107
74ST-2SD1138C	375
74Z6	5241A
74Z6A	5241A
75	116
75-100-001	519
75-461	102A
75B1Z	801
75B2	5015A
75D01	5454
75D02	5455
75D03	5543
75D06	5455
75D1	116
75D2	116
75D8	125
75D10	125
75E1	116
75E2	116
75E3	116
75E4	116
75E5	116
75E6	116
75E7	125
75E8	125
75E10	125
75F05	116
75KBP005	166
75KBP02	167
75KBP04	168
75KBP06	169
75KBP08	170
75KBP10	170
75N1	154
75N5	145A
75N5.1	135A
75N5.6	136A
75N5AA	123AP
75N6.2	137A
75N12	142A
75N27	146A
75R1B	116
75R2B	116
75R3B	116
75R4B	116
75R5B	116
75R6B	116
75R7B	125
75R8B	125
75R9B	125
75R10B	125
75R11B	506

PART NUMBER	NTE REPLACEMENT
75R12B	506
75R13B	506
75R14B	506
75ST-2SC2229Y	399
75ST-2SD467C(AU)E	85
75W005M	5304
75W02M	5304
75W04M	5304
75W06M	5304
75W08M	5304
75W10M	5304
75W-005	116
75Z6	5242A
75Z6A	5242A
75Z7.5A	138A
75Z9.1	139A
75Z9.1A	139A
75Z9.1B	139A
75Z9.1C	139A
75Z11	141A
75Z11A	141A
75Z11B	141A
75Z11C	141A
75Z12	142A
75Z12A	142A
75Z12B	142A
75Z12C	142A
75Z13	143A
75Z13A	143A
75Z13B	143A
75Z13C	143A
75Z14	144A
75Z14A	144A
75Z14B	144A
75Z14C	144A
75Z15	145A
75Z15A	145A
75Z15B	145A
75Z15C	145A
75Z27	146A
75Z27A	146A
75Z27B	146A
75Z27C	146A
75Z33	147A
75Z33A	147A
75Z33B	147A
75Z33C	147A
75Z56	148A
75Z56A	148A
75Z56B	148A
75Z56C	148A
75Z62	149A
75Z62A	149A
75Z62B	149A
75Z62C	149A
75Z82	150A
75Z82A	150A
75Z82B	150A
75Z82C	150A
75Z110	151A
75Z110A	151A
75Z110B	151A
75Z110C	151A
76	126
76-005-003	74LS26
76-005-005	74LS26
76-005-007	74LS74A
76-005-013	74LS367
76-0105	175
76-042-9-006	289
76-1	128
76-100-001	927D
76-120-001	955M
76-140-001	995M
76-500-001	2013
76-11770	104
76-12965-26	109
76-13570-39	108
76-13570-59	108
76-13570-65	112
76-13570-85	112
76-13848-23	112
76-13866-17	108
76-13866-18	108
76-13866-19	108
76-13866-19(VHF)	107
76-13866-20	108
76-13866-59	108
76-13866-62	108
76-14090-1	128
76-14196-1	110MP
76-14327-1	500A
76-14327-2	500A
76-14327-4	500A
76-I(SYLVANIA)	159
76-L(SYLVANIA)	159
76B1Z	742
76G1450J	116
76N1	123AP
76N1(REMOTE)	123AP
76N1(VID)	199
76N1B	128
76N1M	123AP
76N2	123AP
76N2B	128
76N3B	128
76N2369-000	123AP
76N2369-001	123AP
76RECT-SI-176	5012A
76S1030-000	128
76SD-1N4148	519
76SD-1N4148(AU)	519
76SD-1N4148AU	519
76ST-2SC1514-15	376
76ST-2SC1815GR	85
76Z6	5243A
76Z6A	5243A
77	116
77(DIODE)	116
77-001	230
77-27166-2	160
77-27198-3	199
77-270877-2	121
77-270878-2	121
77-270993-1	117
77-271025-1	102A
77-271026-1	102A
77-271027-1	102A
77-271029-1	160
77-271029-2	160
77-271031-1	109
77-271032-1	109
77-271036-1	102A
77-271037-1	102A
77-271038-1	160
77-271039-1	102A
77-271166-2	160
77-271166-3	160
77-271374-1	116
77-271453-1	123AP
77-271490	128
77-271490-1	128
77-271491-1	121
77-271798-1	184
77-271798-2	199
77-271798-3	184
77-271818-1	129
77-271819-1	123AP
77-271967-1	123AP
77-272913-1	152
77-272914-1	153
77-272999-1	128
77-273001-2	123AP
77-273001-3	160
77-273004-1	158
77-273715-1	152
77-273716-1	153
77-273738-1	152
77-273739-1	153
77A	105
77A0	105
77A01	177
77A02	177
77A1	105
77A2	105
77A3	105
77A4	105
77A5	105
77A6	105
77A7	105
77A8	105
77A9	105
77A10	105
77A10R	105
77A11	177
77A12	105
77A13	177
77A13P	105
77A14	105
77A14-7	105
77A14-7B	105
77A15	105
77A15L	105
77A16	105
77A16-1	105
77A17	105
77A17-1	105
77A18	105
77A19	105
77A19G	105
77A119	105
77A121	105
77A182	105
77A-70	105
77A-70-12	105
77A-70-12-7	105
77B	121MP
77B0	121MP
77B1	121MP
77B2	121MP
77B3	121MP
77B4	121MP
77B5	121MP
77B6	121MP
77B7	121MP
77B8	121MP
77B9	121MP
77B10	121MP
77B10R	121MP
77B11	121MP
77B12	121MP
77B12(IC)	788
77B13	121MP
77B13P	121MP
77B14	121MP
77B14-7	121MP
77B14-7B	121MP
77B15	121MP
77B15L	121MP
77B16	121MP
77B16-2	121MP
77B17	121MP
77B17-1	121MP
77B18	121MP
77B19	121MP
77B19G	121MP
77B119	121MP
77B121	121MP
77B182	121MP
77B-70	121MP
77B-70-12	121MP
77B-70-12-7	121MP
77C	121
77C0	121
77C1	121
77C2	121
77C3	121
77C4	121
77C5	121
77C6	121
77C7	121
77C8	121
77C9	121
77C10	121
77C10R	121
77C11	121
77C12	121
77C13	121
77C13P	121
77C14	121
77C14-7	121
77C14-7B	121
77C15	121
77C15L	121
77C16	121
77C16-3	121
77C17	121
77C17-1	121
77C18	121
77C19	121
77C19G	121
77C119	121
77C121	121
77C182	121
77C800-005	9930
77C800-007	9932
77C800-008	9946
77C813-002	9945
77C710891-2	941
77C-70	121
77C-70-12	121
77C-70-12-7	121
77D10	116
77N1	123AP
77N2	123AP
77N2B	128
77N3	123
77N4	123AP
77N5	123AP
77N6	123AP
77S1017	519
77SS-2N5062	5402
77ST-2SD669AC	373
77ST-2SD869	89
77Z6	5244A
77Z6A	5244A
78-001	231
78-900-002	159
78-900-003	189
78-900-004	261
78-5009	121
78-254566-1	116
78-254566-4	116
78-271030-1	117
78-271031-1	110MP
78-271032-2	110MP
78-271143-1	116
78-271199-1	109
78-271228-1	109
78-271383-1	142A
78-271383-2	146A
78-271383-3	145A
78-271383-4	145A
78-272160-1	116
78-272212-1	121
78-273002-1	109
78-273008	116
78-273008-1	116
78-273085	116
78A200010P4	7400
78BLK	100
78C01	108
78C02	108
78E67-2	199
78GRN	100
78GUIC	953
78H05KC	932
78HV05CA	931
78HV05CDA	931
78HV05CU	960
78HV12CDA	933
78HV12CU	966
78L05	977
78L05A	977
78L05ACP	977
78L05AV	977
78L05AVP	977
78L05J	977
78L05V	977
78L06	988
78L06A	988
78L06C	988
78L08	981
78L08A	981
78L08AC	981
78L08AWC	981
78L09	1902
78L09A	1902
78L12	950
78L12A	950
78L15	951
78L18	1906
78L24	1908
78L62	988
78L62AWC	988
78L62WV	988
78L82AC	981
78M05	960
78M05C	960
78M05HF	960
78M12	966
78M12C	966
78N1	123AP
78N2B	123AP
78RED	100
78SD-1N4148(AU)	519
78SZ-UZP-12B	142A
78T12K	1912
78T15K	1918
78YEL	100
78Z6	5246A
78Z6A	5246A
79-42C16	416
79-42C18	435P18
79-42C24	428
79-42C40	430
79E104-2	519
79F015	109
79F114-1	128
79F114-2A	129
79F114-3	128
79F114-4	129
79F114-4A	129
79F150	358
79F150-2	358
79F151	118
79F153	120
79GUIC	954
79L05	1917
79L05A	1917
79L05ACP	1917
79L05CP	1917
79L12	1903
79L15	1905
79L18	1907
79L24	1909
79M05	961
79M05C	961
79M05CT	961
79M12	967
79M12C	967
79P1	102A
79Z6	5247A
79Z6A	5247A
80-053001	123AP
80-050100	123AP
80-001300	125
80-050300	103A
80-001400	125
80-050400	160
80-050500	160
80-050600	103A
80-050700	121
80-051500	123AP
80-051600	129
80-052102	123AP
80-052202	123AP
80-052302	123AP
80-052402	130
80-052600	123AP
80-052700	129
80-052800	103A
80-053300	128
80-053400	123AP
80-053600	108
80-053702	130MP
80-60-1	109
80-308-2	123AP
80-104900	126
80-105200	126
80-105300	126
80-205400	102A
80-205600	102A
80-236400	102A
80-236430	102A
80-243900	102A
80-318250	123AP
80-337390	123AP
80-338030	108
80-338040	108
80-339430	108
80-339440	108
80-383840	108
80-383930	108
80-383940	123AP
80-389910	123AP
80-389930	123AP
80-414120	130
80-414130	130
80-421980	123AP
80-2226314	102A
80-SI-M51358B	1545
80A5	125
80AS	125
80C95	80C95
80C96	80C96
80H	125
80H3	5866
80H3P	5866
80H3PN	5867
80HF10	6074
80HF10R	6075
80HF20	6074
80HF40	6076
80HF60	6076
80HFR20	6075
80HFR40	6077
80HFR60	6077
80P1	102A
80P2	129
80P2B	129
80P3	129
80P3B	129
80ST-2SC2271E	399
80Z6	5248A
80Z6A	5248A
81-23860400-3	188
81-23860400A	188
81-23860400B	188
81-27123100-3	116
81-27123150-8	109
81-27123300-3	116
81-27123307-3	116
81-27125140-7	123AP
81-27125140-7A	123AP
81-27125140-7B	123AP
81-27125160-5	123AP
81-27125160-5A	123AP
81-27125160-5B	123AP
81-27125270-2	123AP
81-27125270-2A	123AP
81-27125270-2B	123AP
81-27125300-7	123AP
81-27125530-9	188
81-27125530-9A	188
81-27125530-9B	188
81-27126090-3	219
81-27126100-0	130
81-27126130-7	121
81-27126130-7A	121
81-27126130-7B	121
81-46123001-3	109
81-46123002-1	614
81-46123004-5	116
81-46123004-7	116
81-46123005	116
81-46123006-2	109
81-46123010-4	5444
81-46123011-2	116
81-46123012-2	116
81-46123013-8	109
81-46123014-6	116
81-46123015-3	109
81-46123018-7	116
81-46123022-9	116
81-46123023-7	177
81-46123034-4	116
81-46123035-1	116
81-46123038-5	177
81-46123043-5	116
81-46123044-3	5072A
81-46125001-1	126
81-46125002-9	102A
81-46125003-7	102A
81-46125004-5	102A
81-46125005-2	158
81-46125006-0	108
81-46125007-8	107
81-46125009-4	102A
81-46125010-2	102A
81-46125011-0	102A
81-46125012-8	107
81-46125013-6	107
81-46125016-9	123AP
81-46125018-5	158
81-46125019-3	123AP
81-46125026-8	123AP
81-46125027-6	123AP
81-46125028-4	121
81-46125029-2	102A
81-46125030-0	107
81-46125032-6	107
81-46125033-4	107
81-46125053-2	199
81-46125063-1	199
81-46125065-6	133
81-46125071-4	159
81-46128001-8	1097
81-46128002-6	1110
81P3	129
81RL10	5371
81RL20	5371
81RL30	5371
81RL40	5371
81RL50	5371
81RL60	5371
81RL70	5372
81RL80	5372
81RL100	5372
81RL110	5372
81RL120	5372
81RLB50	5371
81RLB60	5371
81RLB80	5372
81RLB100	5372
81RLB110	5372
81RLB120	5372
81RM10	5371
81RM20	5371
81RM30	5371
81RM40	5371
81RM50	5371
81RM60	5371
81RM70	5372
81RM80	5372
81RM90	5372
81RM100	5372
81ST-2SA10150(AU)B	290A
81ST-2SB561C	298
81SV-KB262	605A
81T2	128
81X0042-100(NPN)	184
81X0042-100(PNP)	185
81Z6	5249A
81Z6A	5249A
82	5047A
82-4	116
82-473-611-01	605A
82-473-644-01	234
82-481-636-01	5031A
82-481-637-01	5026A
82-481-638-01	5072A
82-481-727-01	801
82-481-826-01	2004
82-729-801-71	2302
82-730-624-01	3011
82-736-614-01	312
82-736-615-01	116
82-736-616-01	519
82-736-617-01	1206
82-736-618-01	788
82-736-663-01	196
82-736-664-01	5025A
82-736-690-01	109
82-409501	123AP
82-410300	129
82M432B2	915
82M667B2	925
82RECT-SI-154(AU)	552
82RL10	5368
82RL20	5368
82RL30	5368
82RL40	5368
82RL50	5368
82RL60	5368
82RL80	5369
82RL100	5369
82RL110	5369
82RL120	5369
82RLA80	5579
82RLA100	5579
82RLA110	5579
82RLA120	5579
82RLB50	5368
82RLB60	5368
82RLB80	5369
82RLB100	5369
82RLB110	5369
82RLB120	5369
82RM10	5368
82RM20	5368
82RM30	5368
82RM40	5368
82RM50	5368
82RM60	5368
82RM80	5369
82RM100	5369
82S129	74S287
83	129
83-1	159
83-2	506
83-43-3	118
83-829	116
83-880	116
83-1056	121
83A30-1	116
83B38-1	109
83C6V8	5071A
83C30-1	116
83N52	105
83P1	159
83P1A	159
83P1B	159
83P1BC	159
83P1M	159
83P1MC	159
83P2	159
83P2A	159
83P2AA	159
83P2AA1	159
83P2B	129
83P2M	159
83P2M1	159
83P2N	159
83P3	159
83P3A	159
83P3AA	159
83P3AA1	159
83P3B	159
83P3B1	159
83P3M	159
83P3M1	159
83P4	159
83PS	159
83Z6	5252A
83Z6A	5252A
84	121
84-44-3	118
84A	121
84A0	121
84A1	121
84A2	121
84A3	121
84A4	121
84A5	121
84A6	121
84A7	121
84A8	121
84A9	121
84A10	121
84A10R	121
84A12	121
84A13	121
84A13P	121
84A14	121
84A14-7	121
84A14-7B	121
84A15	121
84A15L	121
84A16	121
84A16B	121
84A17	121
84A17-1	121
84A18	121
84A19	121
84A19G	121
84A20	177
84A121	121
84A182	121
84A-70	121
84A-70-12	121
84A-70-12-7	121
84AA1	121
84AA19	121
84B	121
84C01	157
84G01	157
84H87	74H87
84H183	74H183
84S157PC	74S157
84SZ-RD12EB3	5021A
85(RECT)	116
85-5	116
85-370-2 BLU	121
85-370-2(BLU)	121
85-5056-2	123AP
85-5058-2	121
85C04	123AP
85HF10	6074
85HF20	6074
85HF40	6076
85HF60	6076
85HF80	6078
85HF100	6078
85HF120	6078
85HF1200	6078
85HFR10	6075
85HFR20	6075
85HFR40	6077
85HFR60	6077
85HFR80	6079
85HFR100	6079
85HFR120	6079
85M02704	910
85ST-2SA733Q	383
85ST-2SC458C(AU)E	85
85X0123-001	284
85Z6	5254A
85Z6A	5254A
86	116
86 A 86A327	123AP
86-000406-2	159
86-000407-2	159
86-0001	614
86-0002	109
86-0005	139A
86-0006	116
86-0007-004	123AP
86-0008	109
86-0010	116
86-001	109
86-0012	116
86-0012-001	123AP
86-0013	116
86-0016-01	116
86-0022-001	123AP
86-0029-001	123AP
86-0031-001	123AP
86-0033-007	131MP
86-0036-001	159
86-0509	614
86-0510	5071A
86-005135-2	199
86-0520	601
86-0511	116
86-0513	109
86-0514	614
86-0515	177
86-0516	116
86-0518	614
86-0519	601
86-0521	142A
86-0522	519
86-1-3	116
86-3-3	116
86-4-1	116
86-4-2	101
86-5-2	103A
86-6-2	103A
86-7-1	116
86-8-2	121
86-9-1	113A
86-9-3	116
86-10-01	109
86-10-1	109
86-10-2	101
86-11-1	5080A
86-11-2	101
86-12-1	112
86-12-2	101
86-12-3	112
86-13-2	103A
86-14-1	110MP
86-14-2	103A
86-15-1	110MP
86-16-2	102A
86-18-1	113A
86-18-1A	113A

PART NUMBER	NTE REPLACEMENT
86-18-2	160
86-19-2	121
86-20-1	109
86-20-2	160
86-21-1	116
86-21-2	102A
86-22-1	109
86-22-2	102A
86-22-3	116
86-23-1	507
86-23-2	102A
86-23-3	116
86-24-2	103A
86-25-1	142A
86-25-2	103A
86-26-1	116
86-26-2	101
86-27-1	177
86-27-2	102A
86-28-2	102A
86-28-3	116
86-29-2	102A
86-30-1	116
86-30-2	102A
86-30-3	116
86-31-1	142A
86-31-2	101
86-32-1	116
86-32-2	102A
86-33-2	102A
86-34-3	116
86-35-1	139A
86-35-2	103A
86-35-3	116
86-36-1	116
86-36-2	160
86-37-1	139A
86-37-2	160
86-37-3	120
86-38-1	116
86-38-2	160
86-39-2	102A
86-40-3	116
86-41-1	178MP
86-41-1(SEARS)	177
86-42-1	123AP
86-42-3	116
86-44-2	101
86-44-3	118
86-45-1	109
86-45-2	102A
86-46-2	102A
86-46-3	116
86-47-2	102A
86-47-3	120
86-48-1	110MP
86-48-2	102A
86-49-1	109
86-49-2	102A
86-49-3	116
86-50-2	102A
86-50-3	116
86-51-1	142A
86-51-2	116
86-51-3	116
86-52-1	116
86-54-2	102A
86-54-3	116
86-55-3	120
86-56-3	120
86-56-3B	120
86-56-3C	120
86-56-3C(-3F)	120
86-56-3F	120
86-57-3	116
86-58-1	139A
86-58-2	123AP
86-58-3	116
86-59-1	116
86-59-2	102A
86-59-3	116
86-60-1	109
86-60-2	102A
86-60-3	116
86-61-1	5021A
86-61-2	102A
86-62-1	177
86-62-2	121
86-62-3	116
86-63-2	121
86-63-3	116
86-64-1	109
86-65-1	142A
86-65-3	116
86-65-4	177
86-65-9	116
86-66-1	5079A
86-67-0	116
86-67-1	143A
86-67-2	125
86-67-3	125
86-67-3(1S1887A)	116
86-67-3(SANYO)	116
86-67-3(TVR2D)	552
86-67-3(V-OUT)	552
86-67-8	116
86-67-9	116
86-67-31	116
86-68-3	166
86-68-3A	166
86-70-1	177
86-72-2	102A
86-72-3	125
86-73-1	5079A
86-73-2	102A
86-74-1	177
86-74-2	102A
86-74-9	177
86-75-1	5081A
86-75-2	102A
86-75-3	116
86-75-3(SEARS)	116
86-76-1	177
86-76-2	103A
86-77-1	177
86-77-2	102A
86-78-1	177
86-78-2	102A
86-78-3	116
86-79-2	102A
86-80-1	116
86-80-2	102A
86-80-3	116
86-81-2	103A
86-82-2	102A
86-83-2	102A
86-84-1	116
86-84-2	102A
86-85-1	142A
86-85-3	116
86-86-2	160
86-87-2	160
86-87-3	614
86-88-1	5079A
86-88-2	160
86-88-3	109
86-89-1	177
86-89-2	160
86-89-3	116
86-90-2	160
86-91-1	5081A
86-91-2	160
86-92-1	142A
86-92-2	160
86-93-1	5075A
86-93-2	102A
86-94-1	147A
86-95-1	5137A
86-95-2	102A
86-96-1	5166A
86-96-3	120
86-97-1	113A
86-98-2	102A
86-99-2	160
86-100-2	160
86-101-2	160
86-102-2	160
86-102-3	5401
86-103-2	102A
86-103-3	5448
86-103-9	5448
86-104-3	552
86-105-3	506
86-106-3	500A
86-107-2	160
86-108-2	126
86-109-1	5068A
86-109-2	126
86-110-1	5071A
86-110-2	123AP
86-110-3	5402
86-111-1	5080A
86-111-2	126
86-111-3	116
86-112-2	160
86-113-1	5081A
86-113-3	5414
86-114-1	5072A
86-114-2	102A
86-114-3	513
86-115-2	102A
86-116-1	614
86-116-2	126
86-116-3	552
86-117-1	5082A
86-117-2	160
86-117-3	506
86-118-1	140A
86-118-3	506
86-119-1	5085A
86-119-2	123AP
86-120-2	121
86-121-2	128
86-123-2	123AP
86-125-1	109
86-126-2	102A
86-126-3	580
86-127-2	121
86-128-2	102A
86-128-3	580
86-128-3(SANYO/SRS)	116
86-129-2	102A
86-130-2	102A
86-131-2	102A
86-132-2	102A
86-133-2	102A
86-135-1	5072A
86-135-2	160
86-136-2	160
86-138-2	108
86-138-3	107
86-139-1	5079A
86-139-2	123AP
86-139-3	116
86-141-2	121
86-142-2	121
86-143-2	123AP
86-144-2	123AP
86-145-1	138A
86-146-1	109
86-146-2	121
86-146-3	116
86-147-1	177
86-147-2	121
86-147-3	116
86-148-1	5133A
86-149-1	5088A
86-149-2	160
86-150-2	160
86-150-3	5096A
86-151-2	160
86-152-2	102A
86-155-2	123AP
86-156-2	102A
86-156-2A	102
86-157-2	123AP
86-158-2	123AP
86-159-2	102A
86-160-2	129
86-161-2	128
86-162-2	160
86-163-2	160
86-164-2	160
86-165-2	157
86-166-2	123AP
86-169-2	102A
86-170-2	128
86-171-2	123AP
86-172-2	102A
86-173-2	121
86-173-9	121
86-175-2	123AP
86-176-2	102A
86-177-2	157
86-178-2	159
86-178-20	159
86-179-2	160
86-180-2	160
86-181-2	160
86-182-2	123AP
86-183-2	159
86-183-20	159
86-185-2	319P
86-186-2	161
86-188-2	123AP
86-189-2	123AP
86-190-2	123AP
86-191-2	123AP
86-192-2	123AP
86-193-2	123AP
86-194-2	123AP
86-195-2	123AP
86-196-2	123AP
86-197-2	123AP
86-198-2	123AP
86-199-2	123AP
86-201-2	123AP
86-202-2	123AP
86-204-2	161
86-205-2	161
86-207-2	128
86-208-2	128
86-210-2	128
86-211-2	128
86-212-2	194
86-213-2	154
86-214-2	154
86-215-2	154
86-216-2	159
86-217-2	159
86-217-20	159
86-218-2	159
86-218-20	159
86-219-2	159
86-221-2	163A
86-222-2	163A
86-224-2	163A
86-225-2	163A
86-227-2	124
86-228-2	157
86-230-2	121
86-231-2	121
86-232-2	121
86-233-2	159
86-234-2	128
86-235-2	121
86-236-2	124
86-237-2	123AP
86-238-2	123AP
86-243-2	108
86-244-2	108
86-245-2	108
86-246-2	159
86-246-20	159
86-247-2	123AP
86-248-2	121
86-249-2	102A
86-249-9	124
86-250-2	123AP
86-251-2	159
86-251-20	159
86-253-2	160
86-254-2	160
86-255-2	123AP
86-256-2	123AP
86-257-2	157
86-259-2	124
86-260-2	124
86-261-2	124
86-262-0	165
86-262-2	161
86-262-9	165
86-263-2	161
86-264-2	123AP
86-265-2	123AP
86-266-2	128
86-267-2	128
86-271-2	175
86-272-2	175
86-273-2	128
86-275-2	124
86-276-2	159
86-276-20	159
86-277-2	123AP
86-278-2	160
86-279-2	160
86-280-2	126
86-281-2	126
86-282-2	126
86-283-2	102A
86-284-2	188
86-286-2	159
86-286-20	159
86-287-2	157
86-289-2	161
86-290-2	161
86-291-2	128
86-291-9	123AP
86-292-2	127
86-293-2	123AP
86-294-2	159
86-294-20	159
86-295-2	102A
86-296-2	160
86-297-2	102A
86-298-2	159
86-298-20	159
86-300-2	102A
86-301-2	103A
86-303-2	102A
86-304-2	102A
86-305-2	102A
86-306-2	128
86-308-2	123AP
86-309-2	123AP
86-310-2	123AP
86-311-2	126
86-312-2	160
86-313-2	121
86-316-2	154
86-317-2	121
86-319-2	121
86-320-2	160
86-321-2	160
86-322-2	160
86-323-2	123AP
86-324-2	123AP
86-327-2	123AP
86-328-2	123AP
86-329-2	129
86-330-2	128
86-334-2	129
86-336-2	128
86-339-2	123AP
86-339-9	123AP
86-340-2	159
86-340-20	159
86-342-2	123AP
86-344-2	184
86-345-2	185
86-347-2	160
86-348-2	160
86-353-2	121
86-354-2	121
86-359-2	123AP
86-362-2	123AP
86-363-2	160
86-365-2	123AP
86-366-2	160
86-367-2	160
86-368-2	160
86-370-2	121
86-370-2(GRN)	121
86-370-2(ORN)	121
86-370-2(VIO)	121
86-370-2YEL	121
86-373-2	160
86-374-2	160
86-376-2	160
86-379-2	123AP
86-381-2	107
86-386-2	108
86-389-2	123
86-390-2	123AP
86-391-2	123AP
86-392-2	102A
86-393-2	128
86-396-2	185
86-399-1	123AP
86-399-2	123AP
86-399-9	123AP
86-400-2	199
86-403-2	123AP
86-406-2	159
86-407-2	159
86-412-2	175
86-416-2	108
86-417-2	108
86-419-2	102A
86-420-2	123AP
86-421-2	102A
86-422-2	293
86-422-3	188
86-423-2	189
86-423-3	189
86-428-2	128
86-428-9	128
86-431-2	129
86-431-9	129
86-440-2	128
86-441-2	128
86-442-2	161
86-444-2	199
86-445-2	123AP
86-449-2	126
86-449-9	160
86-452-2	128
86-455-3	283
86-457-2	123AP
86-458-2	123AP
86-459-2	159
86-460-2	123AP
86-461-2	123AP
86-462-2	123AP
86-463-2	128
86-463-3	128
86-463-3(SEARS)	128
86-464-2	222
86-465-2	123AP
86-467-2	108
86-472-2	123AP
86-475-2	159
86-476-2	102A
86-477-2	133
86-480-9	121
86-481-1	123AP
86-481-2	123AP
86-482-2	159
86-483-2	123AP
86-483-3	123AP
86-484-2	123AP
86-485-2	123AP
86-486-2	123AP
86-487-2	124
86-487-3	124
86-488-2	108
86-490-2	108
86-491-2	108
86-493-2	123AP
86-494-2	123AP
86-495-2	123AP
86-496-2	123AP
86-497-2	102A
86-500-2	133
86-501-2	159
86-502-2	123AP
86-506-2	184
86-507-2	185
86-509-2	102A
86-510-2	128
86-511-9	294
86-512-2	105
86-513-2	233
86-514-2	123AP
86-515-2	194
86-515-2(SEARS)	123AP
86-520-2	123AP
86-521-2	194
86-525-2	107
86-526-2	199
86-527-2	159
86-528-2	159
86-529-2	152
86-530-2	153
86-533-2	159
86-534-2	123AP
86-536-2	123AP
86-537-2	123AP
86-538-2	123AP
86-539-2	123AP
86-540-2	221
86-541-2	172A
86-543-2	128
86-544-2	152
86-547-2	159
86-548-2	123AP
86-549-2	172A
86-550-2	194
86-551-2	123AP
86-552-2	159
86-554-2	123AP
86-555-2	159
86-555-3	290A
86-556-2	171
86-557-2	194
86-559-2	123AP
86-560-2	123AP
86-561-2	123AP
86-563-2	165
86-563-9	165
86-564-2	283
86-564-3	165
86-564-9	165
86-565-2	123AP
86-566-2	194
86-567-2	128
86-568-2	196
86-568-9	152
86-570-2	290A
86-570-3	290A
86-572-2	6402
86-572-3	6402
86-573-2	123AP
86-574-2	177
86-574-2(DIODE)	178MP
86-574-2(TRANS)	159
86-593-2	229
86-593-9	229
86-594-2	229
86-595-2	123AP
86-596-2	107
86-597-2	107
86-598-2	123AP
86-599-2	123AP
86-600-2	159
86-601-2	192
86-602-2	193
86-604-2	152
86-605-2	222
86-606-2	222
86-607-02	85
86-607-2	85
86-607-2-3	85
86-607-3	199
86-608-2	234
86-609-2	297
86-609-9	297
86-610-2	298
86-610-9	290
86-611-2	194
86-612-2	154
86-613-2	186A
86-614-2	187A
86-615-2	194
86-616-2	129
86-619-2	229
86-620-2	229
86-621-2	229
86-622-2	159
86-624-2	124
86-624-9	124
86-625-2	222
86-626-2	165
86-626-9	165
86-628-2	171
86-628-9	171
86-629-2	154
86-630-2	194
86-631-2	171
86-632-2	222
86-633-2	165
86-633-9	238
86-646-2	123AP
86-648-2	198
86-649-2	194
86-650-2	128
86-651-2	287
86-653-2	171
86-655-2	123AP
86-659-2	294
86-659-3	294
86-660-2	188
86-661-2	123AP
86-663-2	152
86-664-2	171
86-665-2	94
86-665-9	130
86-668-2	6401
86-669-2	159
86-672-2	198
86-673-2	210
86-674-2	195A
86-675-2	123AP
86-702-2	123AP
86-706-2	199
86-804-9	375
86-810-2	375
86-810-9	375
86-10000	229
86-1392	123AP
86-5000-2	102A
86-5000-3	116
86-5001-2	102A
86-5001-3	116
86-5002-3	116
86-5003-2	103A
86-5003-3	116
86-5004-2	103A
86-5005-2	103A
86-5006-2	102A
86-5006-3	116
86-5007-2	103A
86-5007-3	109
86-5008-2	103A
86-5009-3	116
86-5010-3	177
86-5011-2	103A
86-5011-3	177
86-5012-2	103A
86-5012-3	116
86-5013-2	103A
86-5015-2	103A
86-5015-3	177
86-5016-2	103A
86-5017-2	103A
86-5018-2	123AP
86-5024-3	116
86-5026-2	103A
86-5027-2	102A
86-5027-3	177
86-5028-3	5802
86-5029-2	103A
86-5029-3	116
86-5032-3	5802
86-5034-2	103A
86-5037-3	177
86-5039-2	121
86-5040-2	123AP
86-5041-2	123AP
86-5042-2	102A
86-5043-2	121
86-5044-2	123AP
86-5045-2	123AP
86-5046-2	123AP
86-5047-2	103A
86-5048-2	103A
86-5049-2	123AP
86-5050-2	123AP
86-5051-2	123AP
86-5052-2	158
86-5055-2	123AP
86-5056-2	123AP
86-5057-2	121
86-5058-2	121
86-5060-2	103A
86-5061-2	103A
86-5062-2	103A
86-5063-2	102A
86-5064-2	129
86-5064-2A	129
86-5065-2	123
86-5067-2	102A
86-5070-2	128
86-5073-2	128
86-5074-2	128
86-5075-2	192
86-5079-2	159
86-5080-2	103A
86-5081-2	123AP
86-5082-2	129
86-5082-2A	129
86-5083-2	121
86-5084-2	130
86-5084-2A	130
86-5085-2	175
86-5086-2	103A
86-5087-2	103A
86-5088-2	121
86-5089-2	121
86-5090-2	121
86-5091-2	102A
86-5093-2	128
86-5095-2	133
86-5096-2	133
86-5097-2	123AP
86-5100-2	184
86-5101-2	130
86-5101-2A	130
86-5102-2	152
86-5103-2	123AP
86-5104-2	193
86-5105-2	172A
86-5106-2	175
86-5107-2	152
86-5108-2	152
86-5109-2	128
86-5110-2	123AP
86-5111-2	123AP
86-5112-2	130
86-5112-2(THOMAS)	130
86-5113-2	121
86-5114-2	123AP
86-5117-2	123AP
86-5122-2	133
86-5125-2	121
86-5163-2	152
86-5342-2	158
86-5911-3	116
86-5943-2	121
86-10003	229
86-10006	229
86-10009	159
86-10010	293
86-10014	177
86-100002	229
86-100003	123AP
86-100004	229
86-100005	123AP
86-100006	229
86-100007	229
86-100008	123AP
86-100009	159
86-100010	293
86-100011	294
86-100012	614
86-100013	177
86-100014	177
86A86A327	123AP
86A318	102A
86A327	199
86A332	130
86A334	123AP
86A335	159
86A336	123AP
86A338	175
86A339	218
86A350	123AP
86C04	185
86P1AA	159
86ST-MPS9750D	159
86X0006-001	123AP
86X0007-001	123AP
86X0007-004	108
86X0007-104	123AP
86X0007-204	108
86X0008-001	123AP
86X0009-001	121
86X00011-001	102
86X0030-001	121MP
86X0030-100	121MP
86X0040-00	123AP
86X0040-001	123AP
86X0050-001	123AP
86X0060-001	107
86X0070-001	6402
86X0080-001	242
86X0080-002	241
86X0080-100(NPN)	152

PART NUMBER	NTE REPLACEMENT
86X0080-100(PNP)	153
86X0090-001	123AP
86X006-001	123AP
86X007-004	123AP
86X007-034	123AP
86X0011-001	126
86X0012-001	123
86X0013-001	126
86X0014-001	100
86X0015-001	121
86X0016-001	159
86X0016-001A	159
86X0017-001	102A
86X0018-001	102A
86X0019-001	107
86X0022-001	123AP
86X0024-001	704
86X0025-001	123
86X0025-001(AFO)	124
86X0025-001(TIK)	123AP
86X0027-001	704
86X0028-001	124
86X0029-001	123AP
86X0031-001	123AP
86X0031-002	123AP
86X0031-003	123AP
86X0032-001	123AP
86X0033-001	131
86X0034-001	233
86X0034-001(3RDLF)	233
86X0034-001(3RDIF)	123AP
86X0035-001	123AP
86X0036-001	159
86X0036-001(DIODE)	506
86X0036-001(TRANS)	159
86X0036-001A	159
86X0037-001(NPN)	103A
86X0037-001(PNP)	102A
86X0037-002	102A
86X0037-100(NPN)	103A
86X0037-100(PNP)	102A
86X0038-001	108
86X0041-001	159
86X0041-001A	159
86X0042-001	242
86X0042-002	241
86X0043-001	108
86X0044-001	159
86X0044-001A	159
86X0045-001	123AP
86X0046-001	159
86X0047-001	159
86X0048-001	123AP
86X0049-001	194
86X0051-001	123AP
86X0052-001	161
86X0053-001	712
86X0054-001	123AP
86X0058-001	123AP
86X0058-002	123AP
86X0058-003	123AP
86X0059-001	184
86X0059-002	182
86X0061-001	107
86X0062-001	107
86X0063-001	123AP
86X0064-001	799
86X0065-001	171
86X0066-001	159
86X0066-003	106
86X0069-001	230
86X0071-001	128
86X0072-001	159
86X0073-001	188
86X0073-002	157
86X0074-001	184
86X0075-001	185
86X0077-001	230
86X0077-002	231
86X0078-001	231
86X0079-001	123AP
86X0081-001	5455
86X0081-002	5457
86X0084-001	815
86X0089-001	172A
86X037-001	103
86X0113-001	123AP
86X0114-001	159
86X0115-001	171
86X0121-001	123AP
86X0123-001	284
86X0124-001	285
86X0127-001	194
86X0128-001	379
86X0129-001	54
86X2	121
86X3	100
86X6	123AP
86X6-1	123AP
86X6-4-518	123AP
86X7-2	123AP
86X7-3	123AP
86X7-4	123AP
86X7-6	107
86X7-6013	108
86X8-1	123AP
86X8-2	123AP
86X8-3	123AP
86X8-4	123AP
86X34-1	123AP
86X46	159
86X47	159
86X53-1	712
86X115	171

PART NUMBER	NTE REPLACEMENT
86X483-2	128
86X6029-001	108
86X-0074-001	184
86X-0075-001	185
86X-0117-001	385
86X-0118-001	165
86Z6	5255A
86Z6A	5255A
87	116
87 RECT-SI-154(AU)	552
87-0001	132
87-0002	229
87-0002-1	229
87-0003	229
87-0004	1006
87-0005	199
87-0006	192
87-0009	199
87-0020	102A
87-0013	199
87-0014	123AP
87-0015	126
87-0016	126
87-0017	126
87-0018	102A
87-0019	102A
87-0021	102A
87-0023-7	229
87-0027	108
87-0028	193
87-0029	193
87-0203-1	289
87-0230	199
87-0230-1	199
87-01	982
87-026-045-01	85
87-026-066-01	601
87-026-069-01	5010A
87-026-150-01	285
87-026-151-01	284
87-026-163-01	382
87-026-165-01	222
87-027-083-01	116
87-027-097-01	177
87-027-143-01	5024A
87-027-144-01	5037A
87-027-151-01	2001
87-027-159-01	5005A
87-027-163-01	5304
87-027-215-01	5022A
87-027-218-01	3007
87-027-230-01	5814(2)
87-027-231-01	5814(2)
87-027-326-01	611
87-027-349-01	5011A
87-027-371-01	778A
87-027-372-01	4066B
87-027-375-01	5015A
87-027-376-01	166
87-027-385-01	5019T1
87-027-386-01	5312
87-027-399-01	5014A
87-027-406-01	5003A
87-027-511-01	969
87-027-530-01	968
87-027-531-01	968
87-0212-1	199
87-0216	1142
87-0218-U	199
87-0227	199
87-0228	291
87-0229	292
87-0231	199
87-0234	801
87-0235	199
87-0235A	229
87-0235B	199
87-0235C	229
87-0236Q	293
87-0236R	293
87-0236S	293
87-0237-R	294
87-0237-S	294
87-0238	199
87-0239-A	287
87-0246	1223
87-5-3	120
87-10-0	109
87-10-1	109
87-56-3	120
87-67-3	552
87-104-3	506
87-190XX-001	177
87-423-2	290
87-593-2	161
87=SI-TA7680AP	1572
87A	116
87A(RECT)	116
87B02	188
87RECT-S1-154	552
87RECT-SI-154(AU)	552
87RECT-SI-1001(AU)	116
87RECT-154	552
87SI-TA7680AP	1572
87Z6	5256A
87Z6A	5256A
88-0550	1115
88-051-060-01	109
88-052-188-11	109
88-3	116
88-77-1	177
88-125	116
88-831	116
88-832	116

PART NUMBER	NTE REPLACEMENT
88-833	116
88-9302	744
88-9302R	744
88-9302RS	744
88-9302S	744
88-9574	737
88-9779	736
88-9779F	736
88-9841R	789
88-9842F	723
88-9842R	723
88-9842RS	723
88-9842S	723
88-18920	1058
88-20372	1058
88-1250108	199
88-1250109	123AP
88A7522	949
88A752271	949
88B	160
88B0	160
88B1	160
88B2	160
88B3	160
88B4	160
88B5	160
88B6	160
88B7	160
88B8	160
88B9	160
88B10	160
88B10R	160
88B11	160
88B12	160
88B13	160
88B13P	160
88B14	160
88B14-7	160
88B14-7B	160
88B15	160
88B15L	160
88B16	160
88B16E	160
88B17	160
88B17-1	160
88B18	160
88B19	160
88B19G	160
88B119	160
88B121	160
88B182	160
88B7258	709
88B-70	160
88B-70-12	160
88B-70-12-7	160
88C	100
88C0	100
88C1	100
88C2	100
88C3	100
88C4	100
88C5	100
88C6	100
88C7	100
88C8	100
88C9	100
88C10	100
88C10R	100
88C11	100
88C12	100
88C13	100
88C13P	100
88C14	100
88C14-7	100
88C14-7B	100
88C15	100
88C15L	100
88C16	100
88C16D	100
88C17	100
88C17-1	100
88C18	100
88C19	100
88C19G	100
88C119	100
88C121	100
88C182	100
88C-70	100
88C-70-12	100
88C-70-12-7	100
88CC-70-12	100
88SZ-RD12FB2	142A
88X0053-001	1045
88Z6	5257A
88Z6A	5257A
89-105-624-01	290A
89-106-844-01	294
89-107-336-01	290A
89-107-505-01	234
89-109-916-01	234
89-110-154-01	290A
89-206-052-01	294
89-206-492-01	374
89-206-492-31	374
89-303-803-01	85
89-303-804-01	85
89-303-813-01	107
89-307-104-01	85
89-308-284-01	85
89-309-456-01	85
89-310-933-41	391
89-313-846-01	293
89-314-055-01	90
89-315-675-01	373

PART NUMBER	NTE REPLACEMENT
89-315-676-01	373
89-316-741-01	107
89-317-353-01	85
89-317-354-01	85
89-318-154-01	85
89-318-155-01	85
89-318-464-01	373
89-319-233-01	229
89-325-633-41	390
89-402-275-01	85
89-402-344-01	152
89-405-712-01	293
89-406-692-01	373
89-406-692-31	373
89-736-613-01	85
89-769-200-30	451
89CP-19072	21128
89PD-01802	85
89ST-MPS9410AK	123AP
89WJ75/46N	109
90(SHARP)	138A
90-30	123AP
90-31	128
90-32	123AP
90-33	199
90-35	1102
90-36	1100
90-37	160
90-37(IC)	1104
90-37(TRANS)	160
90-38	186
90-39	7474
90-45	161
90-46	161
90-47	123AP
90-48	123AP
90-49	108
90-50	132
90-54	160
90-55	132
90-56	158
90-57	123AP
90-58	102A
90-59	160
90-60	102A
90-61	123AP
90-62	132
90-65	123AP
90-66	128
90-67	7474
90-68	7401
90-69	123AP
90-70	199
90-71	123AP
90-72	1102
90-73	1100
90-74	1104
90-75	186
90-110	237
90-111	186A
90-112	315
90-140	199
90-175	224
90-176	186A
90-177	315
90-178	222
90-179	312
90-180	123AP
90-181	128
90-450	235
90-451	186A
90-452	229
90-453	229
90-454	315
90-455	123AP
90-457	229
90-458	123AP
90-459	123AP
90-600	152
90-601	229
90-602	319P
90-603	123AP
90-604	161
90-605	123AP
90-606	312
90-607	312
90-608	312
90-609	235
90-610	236
90-612	229
90-613	312
90-614	199
90-2213-00-18	123AP
90-6001	6800
90-6010	6502
90-7033	2114
90PD-01873	552
90T2	107
91-3	109
91-4	160
91-46	109
91-50	614
91A	108
91A01	116
91A02	116
91A03	116
91A04	125
91A05	116
91A06	116
91A08	116
91A018	116
91A11	116
91AJ150	175
91B	108

PART NUMBER	NTE REPLACEMENT
91B(ZENER)	5095A
91BGRN	108
91C	123AP
91D	123AP
91E	123AP
91F	108
91N1	110MP
91N1B	161
91T6	199
92-1	109
92-1-70	105
92-1-70-12	105
92-1-70-12-7	105
92-1A	105
92-1A0	105
92-1A0R	105
92-1A1	105
92-1A2	105
92-1A3	105
92-1A3P	105
92-1A4	105
92-1A4-7B	105
92-1A4-7	105
92-1A5	105
92-1A5L	105
92-1A6	105
92-1A6-1	105
92-1A7	105
92-1A7-1	105
92-1A8	105
92-1A9	105
92-1A9G	105
92-1A19	105
92-1A21	105
92-1A82	105
92-10	105
92-11	105
92-11-1	116
92-12	105
92-13	105
92-14	105
92-15	105
92-16	105
92-17	105
92-18	105
92-19	105
92-64-1	178MP
92-1001	109
92-30942	123AP
92A11-1	116
92A64-1	177
92A112-1	125
92B1C	723
92B12-2	116
92BIC	723
92BLC	723
92L102-2	116
92N1	108
92N1B	108
92PU01	188
92PU01A	188
92PU02	188
92PU03	190
92PU04	190
92PU06	188
92PU10	191
92PU36	255
92PU36A	255
92PU36B	255
92PU36C	255
92PU45	172A
92PU55	129P
92PU56	129P
92PU57	129P
92PU100	128P
92PU200	129P
92PU391	227
92PU392	227
92PU393	227
92T6	199
93.20.709	125
93.20.714	125
93.24.401	109
93.24.601	109
93.24.604	109
93-13	177
93-188	5693
93-302	116
93-3151	505
93-D91-2	522
93-SE-124	130
93A1-20	116
93A1-21	116
93A1D-1	116
93A2	117
93A3D-2	116
93A4-2	116
93A5-2	113A
93A5-8	113A
93A5-9	113A
93A5-10	113A
93A6-1	116
93A6-2	116
93A8-1	109
93A9	102
93A9-1	102A
93A9-2	102A
93A9-3	100
93A9-4	100
93A10-1	116
93A11	116
93A12-1	116
93A12-3	116
93A15-1	117

PART NUMBER	NTE REPLACEMENT
93A15-10	113A
93A25-1	109
93A25-2	110MP
93A25-3	109
93A27-1	109
93A27-2	116
93A27-3	177
93A27-8	177
93A30-1	116
93A30-3	116
93A31-1	177
93A33-1	109
93A36-1	614
93A38-1	109
93A39-1	5081A
93A39-2	136A
93A39-3	139A
93A39-5	5079A
93A39-6	140A
93A39-7	5079A
93A39-8	5081A
93A39-11	5071A
93A39-12	142A
93A39-12(VOL-REG)	142A
93A39-13	5074A
93A39-14	5082A
93A39-15	123AP
93A39-17	107
93A39-19	136A
93A39-24	145A
93A39-25	149A
93A39-26	136A
93A39-28	5098A
93A39-30	140A
93A39-31	143A
93A39-34	5067A
93A39-35	5086A
93A39-37	5098A
93A39-40	147A
93A39-43	142A
93A39-44	5074A
93A39-45	5081A
93A39-48	5076A
93A39-49	5005A
93A39-50	5075A
93A40-1	506
93A41-2	109
93A41-5	109
93A42-1	116
93A42-2	116
93A42-7	116
93A42-8	116
93A43-1	112
93A43-2	112
93A43-4	112
93A44-2	112
93A45-1	116
93A45-2	116
93A47	116
93A48-1	177
93A48-2	116
93A51-3	116
93A52-1	116
93A52-2	177
93A52-7	506
93A53-2	120
93A53-3	116
93A55-1	5074A
93A56-1	116
93A57-1	118
93A58-1	116
93A59-1	112
93A59-2	112
93A60-1	506
93A60-2	116
93A60-3	506
93A60-5	177
93A60-6	177
93A60-7	116
93A60-8	116
93A60-9	116
93A60-10	506
93A60-11	506
93A60-14	116
93A60-80	116
93A63-1	614
93A63-2	112
93A64-1	177
93A64-2	177
93A64-2(AFC)	178MP
93A64-3	177
93A64-5	177
93A64-7	177
93A67-1	116
93A69-1	506
93A69-2	177
93A71-1	506
93A75-1	120
93A76-1	614
93A77-1	109
93A78-1	116
93A79-6	125
93A80-1	142A
93A83-1	110MP
93A91-1	500A
93A91-2	500A
93A91-3	500A
93A91-4	500A
93A93-1	504
93A93-2	504
93A96-1	500A
93A96-1(HI VOL.RECT)	500A
93A96-2	500A
93A96-3	500A

PART NUMBER	NTE REPLACEMENT
93A97-1	116
93A97-2	116
93A97-3	116
93A97-37	116
93A99-7	539
93A99-8	539
93A102-2	143A
93A104-1	167
93A105-1	109
93A110-1	109
93A112-1	125
93A120	116
93A3912	177
93B1-1	116
93B1-2	116
93B1-3	116
93B1-4	116
93B1-5	116
93B1-6	116
93B1-7	116
93B1-8	116
93B1-9	116
93B1-10	116
93B1-11	116
93B1-12	116
93B1-13	116
93B1-14	116
93B1-15	116
93B1-16	116
93B1-17	116
93B1-18	116
93B1-20	116
93B1-21	116
93B1C	787
93B2-1	116
93B5	113A
93B5-1	113A
93B5-2	113A
93B5-3	113A
93B5-3-8	113A
93B5-3-6	113A
93B5-3-9	113A
93B5-4	113A
93B5-5	113A
93B5-6	113A
93B5-7	113A
93B5-8	113A
93B5-9	113A
93B5-10	113A
93B6	113A
93B8	113A
93B8-1	109
93B9	113A
93B12-1	116
93B12-2	116
93B12-3	116
93B19-1	120
93B20-1	117
93B20-2	117
93B20-3	117
93B24-2	116
93B24-3	116
93B25-1	109
93B25-2	109
93B25-3	109
93B27-1	109
93B27-2	116
93B27-3	110MP
93B27-4	177
93B27-5	177
93B27-8	177
93B30-1	116
93B30-3	116
93B36-1	614
93B38-1	109
93B38-5	109
93B39-1	139A
93B39-2	135A
93B39-3	139A
93B39-4	146A
93B39-5	5079A
93B39-6	140A
93B39-7	5079A
93B39-12	142A
93B39-13	142A
93B39-31	146A
93B41	109
93B41-1	109
93B41-2	109
93B41-3	109
93B41-4	116
93B41-5	614
93B41-6	116
93B41-8	116
93B41-12	116
93B41-14	116
93B41-15	614
93B41-20	117
93B41-29	109
93B42-1	116
93B42-2	116
93B42-3	116
93B42-4	116
93B42-5	116
93B42-6	116
93B42-7	116
93B42-8	116
93B42-9	116
93B42-10	116
93B42-11	116
93B42-12	116
93B44-1	112
93B45-1	116
93B45-2	116

PART NUMBER	NTE REPLACEMENT
93B45-3	125
93B46-1	109
93B47-1	116
93B48-1	177
93B48-2	177
93B48-3	177
93B48-4	177
93B51-3	116
93B52-1	506
93B52-2	506
93B52-27	125
93B53-1	116
93B53-2	120
93B57-1	118
93B58-1	506
93B59-1	112
93B60-3	506
93B60-8	177
93B60-10	506
93B60-11	506
93B64-1	177
93B64-2	506
93B65-1	125
93B65-2	125
93B67-1	506
93B68-14	112
93B71-1	125
93B77-1	109
93B91-1	500A
93B96-1	500A
93B96-2	500A
93B97-1	116
93B122	116
93B123	116
93BLC	787
93C1-20	116
93C1-21	116
93C1-2021	120
93C2-6	109
93C5-5	113A
93C5-6	113A
93C5-7	113A
93C5-8	113A
93C5-9	113A
93C5-10	113A
93C6-7	113A
93C6-9	113A
93C7-1	109
93C7-2	177
93C7-3	177
93C8-1	109
93C12-1	116
93C12-2	116
93C12-3	116
93C16-2	116
93C18-1	125
93C18-2	125
93C19-1	116
93C21-1	109
93C21-2	109
93C21-3	109
93C21-4	109
93C21-5	109
93C21-6	109
93C21-7	109
93C21-8	109
93C24-1	116
93C24-2	116
93C24-3	116
93C24-4	116
93C25-2	110MP
93C25-3	109
93C25-4	116
93C26-1	116
93C26-2	116
93C26-3	116
93C26-4	116
93C26-5	116
93C26-7	113A
93C26-8	116
93C26-9	113A
93C26-10	113A
93C26-11	113A
93C27-1	109
93C27-2	177
93C27-3	177
93C27-4	116
93C27-5	109
93C27-6	109
93C27-7	177
93C28-4	116
93C30-1	116
93C30-3	116
93C39-1	134A
93C39-2	142A
93C39-3	139A
93C39-4	146A
93C39-5	5079A
93C39-6	142A
93C39-7	5079A
93C39-8	5081A
93C39-9	138A
93C39-10	138A
93C39-11	123
93C39-12	142A
93C39-13	142A
93C39-14	138A
93C39-19	136A
93C39-24	145A
93C39-25	149A
93C39-28	5098A
93C39-31	146A
93C39-43	142A
93C39-45	5081A
93C39-49	5005A
93C39-51	5013A
93C39-58	5081A
93C39-79	5013A
93C42-2	116
93C42-7	116
93C52-1	506
93C52-9	116
93C52-9-5S	125
93C52-9-52T	116
93C52-9-55	125
93C52-10	116
93C52-15	116
93C52-27	125
93C53-2	120
93C55-1	109
93C59	113A
93C59-2	113A
93C60-3	506
93C60-5	177
93C60-6	177
93C60-7	116
93C60-9	552
93C60-9-55	552
93C60-10	506
93C60-21	552
93C60-21-55	552
93C60-26	552
93C60-27	552
93C60-27-52T	552
93C64-1	519
93C64-2	519
93C64-3	519
93C64-5	177
93C64-10	558
93C64-11	519
93C64-11H	519
93C69-1	506
93C77-1	109
93C91-2	522
93C93-1	504
93C97-1	116
93C103-4	116
93C112-1	125
93C118-1	125
93C118-2	125
93C218	109
93CG9-1	506
93D8-1	109
93D39-7	5079A
93D39-31	146A
93D39-43	142A
93D39-43-52T	142A
93D39-54	5022A
93D39-54-52T	5022A
93D39-79-52T	5013A
93D52-1	116
93D60-5	519
93D60-21-55	552
93D60-21-64	552
93D64-2	519
93D91-1	522
93D91-2	500A
93D91-3	522
93D91-4	500A
93D91-5	522
93D91-6	522
93D96-3	500A
93D99-5	539
93D99-6	539
93D99-7	539
93D112-57	112
93D-200-81	177
93D-200-82	139A
93D-200-83	5010A
93D-200-84	116
93D-200-85	5015A
93D-200-86	109
93D-200-87	5013A
93D-200-90	1170
93D-200-91	1285
93D-200-94	107
93D-200-95	289A
93D-200-96	85
93D-200-98	85
93D-200-99	290A
93D-200-100	187A
93E2SA755-C	153
93E2SC1923-0	229
93ERH-1X1128	712
93ERH-DX0155	116
93ERH-DX0156	116
93ERH-DX1002	506
93ERH-DX1006	552
93EVHD1N4148	519
93H87DC	74H87
93H87PC	74H87
93H183DC	74H183
93H193PC	74H183
93K2-1	113A
93L08	93L08
93L08DC	93L08
93L08PC	93L08
93L3-1	117
93L3-2	117
93L5-1	116
93L5-2	117
93L5-3	156
93L5-4	116
93L5-5	156
93L5-6	116
93L5-7	116
93L5-8	156
93L16	93L16
93L16DC	93L16
93L16PC	93L16
93L101-2	116
93L102-2	116
93L103-4	116
93L104-5	156
93L107-2	116
93M8-1	117
93N9-1	522
93P1AA	159
93S157DC	74S157
93S157PC	74S157
93S158DC	74S158
93S158PC	74S158
93S174DC	74S174
93S174PC	74S174
93S175DC	74S175
93S175PC	74S175
93S194DC	74S194
93S194PC	74S194
93SC165	130
93SC165133	130
93SC165133A	130
93SE165	181
93T6	199
93T4120280I	109
93T4100203100	85
93T4105002132	152
93T4120265210	5018A
93T4120290136	109
93T4120482210	610
93T4125005150	5021T1
93T4130060052	116
93T4150133000	1116
94-42-9	109
94-1066-1	116
94A1S1588	519
94A2SA1015Y	290A
94A2SC461B	85
94A2SC496Y	295
94A2SC535C	107
94A2SC1815GR	85
94A2SK55D	312
94A80-1	142A
94A-1A6-4	121
94AHA-1156W	801
94AHA-1197	1214
94EQA01-12R	142A
94N1	123AP
94N1B	123AP
94N1R	123AP
94N1V	128
94N2	123AP
94N2P	155
94T1	100
95	519
95-108	160
95-110	160
95-111	126
95-112	101
95-113	101
95-114	101
95-116	160
95-117	160
95-118	160
95-119	160
95-120	160
95-120A	100
95-121	160
95-122	160
95-123	160
95-124	160
95-125	108
95-126	108
95-127	108
95-128	108
95-129	108
95-130	108
95-131	108
95-201	102A
95-202	103A
95-203	102A
95-204	102A
95-208	102A
95-209	102A
95-212	102A
95-213	102A
95-214	102A
95-216	123AP
95-217	102A
95-218	102A
95-220	128
95-221	123AP
95-222-1	102A
95-222-2	103A
95-223	108
95-224-1	102A
95-224-2	103A
95-225	123AP
95-226-003	129
95-226-004	128
95-226-1	129
95-226-2	123AP
95-226-3	129
95-226-4	128
95-227	123AP
95-250	121
95-250-1	121MP
95-251	121
95-252	124
95-252-1	124
95-252-2	124
95-252-3	124
95-252-4	124
95-257	121MP
95-296	123AP
95-5250-07	5125A
95-11410100	102A
95-11410200	102A
95-11410900	102A
95-11413500	102A
95-11414000	102
95-11511500	125
95-114140000	102
95B5-8	113A
95G	552
95G(RECT)	552
95KUAC0004AZ	85
95KUAD0031SZ	261
95KUBC0112AZ	116
95KUBC0215BK	116
95KUBC0215BZ	116
95KUBD0115AZ	5011A
95KUBD0128AZ	5027A
95KUCB0027AZ	960
96-0008	109
96-056-234	108
96-138-2	108
96-5005-01	171
96-5007-01	109
96-5007-02	110MP
96-5022-01	116
96-5022-1	116
96-5023-01	116
96-5026-01	121
96-5032-01	102A
96-5033-01	102A
96-5033-02	102A
96-5033-03	102A
96-5033-04	102A
96-5045-01	121
96-5046-01	116
96-5059-01	109
96-5062-01	160
96-5064-01	121
96-5076-01	158
96-5080-02	123AP
96-5081-01	121
96-5082-01	116
96-5085-01	102A
96-5085-02	102A
96-5086-02	121
96-5087-01	109
96-5088-01	116
96-5091-01	142A
96-5093-01	110MP
96-5093-02	110MP
96-5093-03	110MP
96-5094-01	110MP
96-5094-01(TRANS)	126
96-5095-01	160
96-5096-01	116
96-5098-01	102A
96-5099-01	160
96-5100-01	121
96-5100-03	121
96-5101-01	102A
96-5102-01	102A
96-5103-01	116
96-5106-01	5802
96-5107-01	128
96-5107-02	128
96-5109-01	116
96-5109-02	116
96-5110-02	145A
96-5110-03	145A
96-5112-01	156
96-5113-01	116
96-5115-01	123AP
96-5115-02	123AP
96-5115-03	123AP
96-5115-04	123AP
96-5115-05	123AP
96-5116-01	140A
96-5117-01	130
96-5117-91	130
96-5118-01	177
96-5119-01	116
96-5120-01	116
96-5121-01	116
96-5124-02	138A
96-5125-01	121
96-5131-01	161
96-5132-01	124
96-5133-01-02	142A
96-5133-02	142A
96-5135-01	124
96-5138-01	160
96-5139-01	160
96-5140-01	160
96-5141-01	160
96-5143-01	121
96-5143-02	121
96-5148-01	121
96-5149-01	5802
96-5152-01	123AP
96-5152-03	123AP
96-5153-01	123AP
96-5153-03	123AP
96-5155-01	121
96-5161-01	192
96-5162-03	130
96-5162-04	130
96-5163-01	161
96-5164-02	130
96-5164-03	130
96-5165-01	129
96-5166-01	116
96-5170-01	128
96-5174-01	161
96-5175-01	161
96-5176-01	129
96-5177-01	123AP
96-5178-01	125
96-5180-01	128
96-5180-02	128
96-5184-01	5802
96-5187-01	123AP
96-5190-01	175
96-5191-01	175
96-5192-01	121
96-5193-01	156
96-5194-01	156
96-5195-01	5809
96-5196-01	116
96-5198-01	161
96-5199-01	161
96-5201-01	130
96-5203-01	128
96-5204-01	128
96-5205-01	103A
96-5207-01	130
96-5208-01	128
96-5209-01	129
96-5213-01	123AP
96-5214-01	5400
96-5215-01	159
96-5219-01	171
96-5220-01(NPN)	123AP
96-5220-01(PNP)	129
96-5221-01	123AP
96-5225-01	152
96-5228-01	123AP
96-5229-01	123AP
96-5230-01	129
96-5231-01	128
96-5232-01	196
96-5232-02	152
96-5232-03	196
96-5235-01	161
96-5236-01	161
96-5237-01	123AP
96-5238-01	703
96-5238-02	703
96-5239-01	703
96-5241-01	5809
96-5244-01	128
96-5245-01	196
96-5246-01	5982
96-5248-01	5071A
96-5248-04	142A
96-5248-06	145A
96-5248-09	5067A
96-5248-11	5067A
96-5248-12	5085A
96-5249-01	5127A
96-5249-02	5120A
96-5249-03	5133A
96-5250-01	5127A
96-5250-02	5139A
96-5250-03	5141A
96-5250-06	5130A
96-5250-07	5125A
96-5252-01	128
96-5254-01	177
96-5255-01	123AP
96-5256-01	128
96-5257-01	123AP
96-5258-01	234
96-5259-01	161
96-5260-01	161
96-5262-01	189
96-5263-01	188
96-5267-01	196
96-5269-01	6401
96-5281-01	123AP
96-5282-01	159
96-5283-01	159
96-5284-01	162
96-5285-01	130
96-5290-01	123AP
96-5303-01	153
96-5310-01	280
96-5314-01	123AP
96-5315-01	181
96-5316-01	197
96-5320-01	189
96-5333-01	116
96-5334-01	161
96-5334-04	5133A
96-5334-05	5135A
96-5344-01	5125A
96-5344-02	5188A
96-5344-03	5130A
96-5345-01	125
96-5346-01	199
96-5348-01	152
96-5349-01	153
96-5356-01	153
96-5357-01	152
96-5363-01	109
96-5364-01	128
96-5365-01	159
96-5370-01	284
96-5371-01	285
96-5376-01	725
96-5378-01	121
96-5397-01	130
96-51430-02	121
96B-3A65	121MP
96L02	96L02
96L02DC	96L02
96L02DM	96L02
96L02PC	96L02
96LS02PC	96LS02
96N1	124
96N927	108
96N932	108
96N(AIRLINE)	108
96NPT	108
96XZ0778-44N	109
96XZ0868/15X	109
96XZ077844N	109
96XZ778/21N	109
96XZ778/27N	113A
96XZ778/44N	109
96XZ801/06N	121
96XZ801/10N	121
96XZ801/14N	123AP
96XZ801/34X	121
96XZ801/37N	160
96XZ801/50N	102A
96XZ6050/25N	161
96XZ6051-28N	126
96XZ6051-35N	126
96XZ6051-36N	126
96XZ6052-52N	123AP
96XZ6052/52N	123AP
96XZ6053-09N	102
96XZ6053-10N	126
96XZ6053-11N	123AP
96XZ6053-24N	126
96XZ6053-27N	102
96XZ6053-51N	158
96XZ6053/11N	123AP
96XZ6053/24N	158
96XZ6053/27N	102A
96XZ6053/35N	123AP
96XZ6053/36N	123AP
96XZ6053/38N	128
96XZ6053/51N	102A
96XZ6054/45X	131MP
97A83	104
97N2	101
97N2U	103A
97P1	102
97P1U	158
98-1	102A
98-2	102A
98-3	102A
98-4	102A
98-5	102A
98-6	102A
98-7	102A
98-301	116
98-302	117
98-24320-2	175
98A12518	116
98M2SC1318-R	128
98M2SD601	2408
98MDT144EK	2359
98P1	159
98P1P	131
98P10	159
98P-2A6-2	102A
98T2	123AP
99-04004	123AP
99-010147	172A
99-101	126
99-102	126
99-103	126
99-104	102A
99-105	160
99-106	160
99-107	160
99-108	160
99-109-1	123AP
99-109-2	123AP
99-120	160
99-121	160
99-201	102A
99-202	102A
99-203	102A
99-PWR	104
99-S-075	196
99AT6	102
99B5	102
99BA6	100
99BE6	100
99K7	101
99L6	103
99L6(SHARP)	128
99L-4A6-1	102A
99P1	159
99P1M	159
99P2	129
99P2B	129
99P3	102A
99P3AA	102A
99P3C	129
99P5	159
99P10	159
99P117	129
99PLM	129
99S001	121
99S002	102A
99S003	100
99S004	158
99S004A	102A
99S005	102A
99S006	160
99S007	160
99S010	102A
99S010A	102A
99S020	123
99S040	194
99S060-1	194
99S070-1	194
99S090-1	108
99S0102-1	171
99S07	101
99S011	102A
99S011A	102A
99S012	123AP
99S012A	123AP
99S012E	123AP
99S013	121MP
99S013A	121MP
99S014	121
99S014A	121
99S015	121
99S016	108
99S016-1	108
99S017	108
99S018	108
99S018A	108
99S019	108
99S019A	108
99S019B	108
99S022	703
99S022-1	703
99S025	123AP
99S025A	123AP
99S031	161
99S032	161
99S032(3RD LF)	233
99S032(3RD-IF)	123AP
99S033	199
99S033-40(NPN)	123AP
99S033-40(PNP)	159
99S033A	123AP
99S034	194
99S035	123AP
99S036	123AP
99S036(TELEDYNE)	128
99S037	108
99S038	123AP
99S039	159
99S039A	159
99S041	222
99S044	161
99S045	221
99S045A	222
99S046	222
99S047	175
99S049	726
99S053	722
99S053-1	722
99S055	229
99S056	229
99S057	179
99S061-1	194
99S062-1	159
99S067-1	161
99S073	129
99S074	128
99S075	196
99S077-1	194
99S079	165
99S079(HORZ OUT)	165
99S079-1	165
99S079-1(HORZ OUT)	165
99S079-2	165
99S082	712
99S082-1	712
99S083-1	196
99S084-1	159
99S085	123AP
99S087-1	154
99S091-1	188
99S092-1	189
99S094	714
99S094-1	714
99S097	783
99S097-1	783
99S099	197
99S099-1	153
99S100	196
99S100-1	152
99S101-1	154
99S102-1	190
99S103-1	181
99S103-2	181
99S103-3	181
99S105-1	184
99SA7	103A
99SK5	101
99SK7	101
99SO22	703
99SQ7	101
100-00910-07	109
100-00310-09	177
100-00340-00	109
100-001-01/2228-3	117
100-003-40/228-3	109
100-003-40/2228-3	109
100-007-10/2228/3	177
100-007-13/228-3	109
100-007-13/2228-3	109
100-008-53/2228-3	614
100-0051	109
100-01110-01	177
100-01120-09	177
100-00914-10	110MP
100-011-20	177
100-011-50/2228-3	177
100-0124	109
100-0125	109
100-0495-15	194
100-0673-04	290

PART NUMBER	NTE REPLACEMENT
100-1(PHILCO)	153
100-10	136A
100-11	177
100-12	109
100-13	116
100-14	139A
100-15	116
100-120	177
100-125	177
100-130	177
100-132-00	116
100-135	136A
100-136	109
100-137	177
100-138	116
100-139	139A
100-160	109
100-161	177
100-162	116
100-180	109
100-181	109
100-184	177
100-198	106
100-215	109
100-216	177
100-217	116
100-218	5071A
100-219	5072A
100-286	143A
100-435	177
100-436	109
100-437	5071A
100-438	116
100-520	116
100-521	5072A
100-522	139A
100-523	139A
100-525	5081A
100-526	614
100-527	116
100-4107	107
100-4790	159
100-4846-001	128
100-5338	128
100-5338-001	128
100-5765-001	175
100-10121-05	116
100-10132-00	116
100-22363-08	614
100A	116
100B31	1004
100B63	102
100C	125
100C(ADMIRAL)	506
100C-4R	116
100D10	125
100DF01120	15007
100DF10110	15023
100H3P	5868
100H3PN	5869
100K10	125
100N1	161
100N1AS	161
100N1P	161
100N1P(SOUND)	123AP
100N1P(VID)	161
100N3	319P
100N3P	161
100R1B	116
100R2B	116
100R3B	116
100R4B	116
100R5B	116
100R6B	116
100R7B	125
100R8B	125
100R9B	125
100R10B	125
100R11B	506
100R12B	506
100R13B	506
100R14B	506
100T2	130
100T2A	130
100W1	108
100X2	130
100X6	130
100X6A	130
101-1(ADMIRAL)	161
101-2(ADMIRAL)	108
101-3(ADMIRAL)	108
101-4(ADMIRAL)	108
101-12	100
101-15	102A
101A	160
101B	160
101B6	116
101M	160
101P1	159
101P10	159
101S058360	15029
101SD57530	1629
102-0460-02	229
102-02	109
102-0373-00	199
102-0394-25	229
102-0454-02	123AP
102-0461-02	229
102-0495-00	295
102-0495-20	295
102-0535-02	108
102-0732-28	199
102-0735-25	289
102-0828-17	229
102-0945-16	199
102-0945-17	199
102-0945-38	199
102-0945-39	199
102-4	161
102-207	109
102-339	177
102-412	519
102-1047-03	161
102-1061-01	184
102-1166-25	123AP
102-1317-18	123AP
102-1335-04	123AP
102-1342-02	229
102-1384-17	192
102-1675-11	229
102-1675-12	229
102-1678-00	235
102A98L050	977
102A978120	966
102B6	116
102D	116
102DB13820	1616
102DC13710	1410
102DE14020	15016
102P1	159
102P10	159
102SD13780	1676
102SP12770	1626
103-0227-18	123AP
103-0235-85	152
103-0571-11	306
103-0571-12	306
103-3	109
103-4	108
103-19	109
103-20	113A
103-22	109
103-23	109
103-23-01	109
103-29	116
103-31	109
103-32	113A
103-34	109
103-39	614
103-42	177
103-43	113A
103-44	109
103-47	614
103-47-01	614
103-49	112
103-51	177
103-59	116
103-60	112
103-61	112
103-65	112
103-73	109
103-74	109
103-76	116
103-79	109
103-82	116
103-84	144A
103-87	109
103-90	110MP
103-96	552
103-101	178MP
103-102	110MP
103-104	614
103-104A	5014A
103-105	5081A
103-105-01	5081A
103-112	506
103-114	109
103-131	177
103-135	5085A
103-136	145A
103-140	5071A
103-140-01	177
103-140A	5014A
103-141	519
103-142	177
103-142-01	177
103-142-02	177
103-142-011	177
103-144	5138A
103-144-01	5081A
103-144-03	5141A
103-145	177
103-145-01	177
103-146	614
103-150	146A
103-151	5141A
103-157	5105A
103-158	142A
103-159	177
103-160	506
103-176	614
103-178	177
103-178-01	177
103-178-02	177
103-178-02A	177
103-179-13A	5013A
103-181W	935
103-182W	932
103-184W	933
103-185W	931
103-189	614
103-191	116
103-192	178MP
103-192W	934
103-193	506
103-194	5015A
103-196	506
103-202	112
103-202-01	112
103-202-GE	112
103-203	116
103-206	5162A
103-207	5098A
103-208	5098A
103-212	5080A
103-212-76	116
103-215	513
103-216	116
103-222	177
103-228	116
103-235	614
103-236	147A
103-237	147A
103-238	5160A
103-239	503
103-239-01	503
103-239-02	504
103-239-02B	504
103-240	177
103-244	506
103-245	116
103-246	5074A
103-247	506
103-248	5081A
103-251	5082A
103-252	5077A
103-254	116
103-254-01	116
103-256	143A
103-258	505
103-260	5001A
103-261	116
103-261-0	116
103-261-01	116
103-261-02	177
103-261-02A	116
103-261-04	552
103-261-04A	552
103-263	558
103-263A	506
103-270	5086A
103-271	110MP
103-272	139A
103-275-02	503
103-276	5081A
103-276(MIXER)	112
103-278	5081A
103-279	5000A
103-279-01	5001A
103-279-02	5002A
103-279-03	5003A
103-279-04	5004A
103-279-05	5066A
103-279-06	134A
103-279-07	5067A
103-279-08	5068A
103-279-08A	5008A
103-279-09	5009A
103-279-09A	5009A
103-279-10	135A
103-279-10A	5010A
103-279-11	136A
103-279-11A	5011A
103-279-12	5012A
103-279-12A	5012A
103-279-13	5013A
103-279-13A	5013A
103-279-14	5071A
103-279-14A	5014A
103-279-14R	5014A
103-279-15	138A
103-279-16	5016A
103-279-16A	5016A
103-279-17	5073A
103-279-18	5081A
103-279-19	5019A
103-279-19A	5019A
103-279-20	5074A
103-279-20A	5020A
103-279-21	142A
103-279-21A	5021A
103-279-22	5022A
103-279-22A	5022A
103-279-23	144A
103-279-23A	5023A
103-279-24	5024A
103-279-25	5075A
103-279-26	5076A
103-279-26A	5026A
103-279-27	5077A
103-279-28	5078A
103-279-28A	5078A
103-279-30	5080A
103-279-31	5031A
103-279-31A	5031A
103-279-32	5082A
103-279-33	146A
103-279-34	5034A
103-279-35	5084A
103-279-36	5085A
103-279-37	5085A
103-279-37A	5037A
103-279-38	5086A
103-279-39	5087A
103-279-40	5088A
103-279-41	5089A
103-279-42	5090A
103-279-43	5091A
103-279-43A	5091A
103-279-44	149A
103-279-45	5092A
103-279-46	5093A
103-279-46A	5093A
103-279-47	150A
103-279-48	5094A
103-279-49	5095A
103-279-50	5096A
103-279-51	151A
103-279-52	5097A
103-279-53	5098A
103-279-54	5099A
103-279-55	5100A
103-279-56	5101A
103-279-57	5102A
103-279-58	5103A
103-279-59	5104A
103-279-60	5105A
103-279A	5000A
103-284	552
103-284A	552
103-287	558
103-288	147A
103-288-01	147A
103-289	5081A
103-292	5081A
103-293-02	504
103-295	552
103-295-01	177
103-295-01A	177
103-295-02	177
103-295-02A	177
103-295-03	552
103-295-03A	552
103-295A	177
103-298-05	552
103-298-05A	552
103-301-09	5071A
103-301-13	139A
103-301-17A	143A
103-301-19A	5019A
103-301-24	5081A
103-301-24A	5031A
103-305	525
103-305A	525
103-306	525
103-306A	5021A
103-308	5021A
103-308A	5021A
103-309-01	5019A
103-309-01A	5019A
103-309A	5019A
103-312	580
103-315-01	116
103-315-03A	116
103-315-06	116
103-315-06A	116
103-316-04	558
103-326	552
103-326A	552
103-330	116
103-330A	116
103-334	5035A
103-336-11	5011A
103-336-15	5015A
103-336-15A	5015A
103-336-18	5018A
103-336-18A	5018A
103-336-19	5019A
103-336-19A	5019A
103-339	506
103-339-04	506
103-339-04A	580
103-339-4	506
103-344	116
103-344-01	116
103-344-01A	116
103-344-02	116
103-344-02A	116
103-344-06	116
103-344-06A	116
103-344A	116
103-355-06	125
103-355-06A	125
103-368-03	552
103-379-13A	5013A
103-398-05A	552
103-399-04	506
103-408	5013A
103-408A	5013A
103-409	142A
103-409A	5021A
103-417-03	580
103-417-03A	580
103-417-04	552
103-433	519
103-Z9000	5081A
103-Z9001	109
103-Z9002	138A
103-Z9003	142A
103-Z9004	147A
103-Z9005	134A
103-Z9006	135A
103-Z9007	136A
103-Z9008	137A
103-Z9010	140A
103-Z9011	141A
103-Z9012	144A
103-Z9013	145A
103-Z9014	146A
103-Z9015	5080A
103-Z9016	149A
103-Z9017	150A
103-Z9018	151A
103A98M050	960
103A98M060	962
103A98M120	966
103B6	116
103B98M060	962
103B98M090	1902
103D079100	1658
103DD78000	1538
103DE75200	15001
103G3125	116
103G3125A	116
103P935	159
103P935A	159
103P(AIRLINE)	159
103PA	159
103PN(AIRLINE)	159
103S079100	1658
104	154
104-1	614
104-8	154
104-17	126
104-17(RCA)	159
104-17NRCAE	159
104-19	126
104-21	126
104-170	159
104B6	116
104H01	128
104T2	130
104T2A	130
105	159
105(ADMIRAL)	123AP
105-06004-00	108
105-02004-09	108
105-02005-07	107
105-00106-00	108
105-02006-05	107
105-06007-05	123AP
105-00107-09	107
105-02008-01	107
105-00108-07	108
105-001-04	123AP
105-001-05	123AP
105-001-07	123AP
105-001-08	108
105-003-06	123AP
105-003-09	123AP
105-005-04/2228-3	108
105-005-12	108
105-006-08	123AP
105-008-04/2228-3	108
105-009-21/2228-3	108
105-060-09	123AP
105-02	109
105-03	109
105-085-33	123AP
105-085-54	123AP
105-08243-05	123AP
105-12	123AP
105-904-85	123AP
105-904-86	123AP
105-904-87	123AP
105-931-91/2228-3	123AP
105-941-97/2228-3	108
105-24191-04	108
105-28196-07	123AP
105B6	116
105D076300	1576
105DA7607A	1545
105N(ADMIRALE)	123AP
105S925080	1751
105SP72220	1278
106	116
106-001	229
106-002	229
106-003	199
106-004	186A
106-005	295
106-006	235
106-007	519
106-008	109
106-009	177
106-010	139A
106-011	116
106-013	156
106-1	116
106-12	159
106-111	116
106-120	159
106-351	229
106A	5454
106B	5455
106B6	116
106C	5456
106F	5461
106KB0	129
106KBA	129
106M	132
106P1	121
106P1AG	121
106P1T	121
106Q	5461
106RED	159
106Y	5461
107-0021-00	6400
107-8	123AP
107-3088	123AP
107A	160
107A(SCR)	5454
107B	160
107B6	116
107B(SCR)	5455
107BRN	123AP
107C	5456
107D	5457
107F	5461
107M	160
107N1	128
107N2	123AP
107P341	5635
107P491	5637
107Q	5461
107Y	5461
108	116
108(FARFISA)	109
108(FARTISA)	109
108-002	229
108-0049-08	312
108-0068-12	133
108-1	160
108-2	160
108-3	160
108-4	160
108-6	159
108-60	159
108-74	109
108-308	5021A
108A	5454
108A4	116
108B	5455
108B4	116
108B6	116
108C	5456
108D	5457
108E-E2	116
108F	5453
108GRN	159
108H511	123AP
108Q	5452
108Y	5452
109	123AP
109-036500	109
109-1	123AP
109-1(RCA)	123AP
109-192	109
109A949CE	5693
109B6	116
110	159
110-01563-00	102A
110-629	116
110-635	116
110-636	125
110-672	116
110-684	116
110-763	109
110B6	125
110BH1	118
110P1	159
110P1AA	159
110P1M	159
110P2	106
111-1	116
111-4-2020-05600	110MP
111-4-2020-04600	712
111-4-2020-08000	116
111-4-2020-06200(MP)	177
111-4-2020-0800	116
111-4-2020-06100	177
111-4-2020-06200	506
111-4-2020-08600	109
111-4-2020-13300	5085A
111-4-2020-14600	116
111-4-2020-11500	5074A
111-4-2020-14400	506
111-4-2020-15600	177
111-4-2020-15100	506
111-4-2020-14500	116
111-4-2020-11300	5071A
111-4-2060-04600	712
111-4-2060-05100	1158
111-4-2060-02400	1004
111-4-2060-03900	1080
111-4-2060-02600	1080
111-4-2060-04000	712
111-4-2060-02300	1004
111-4-2060-2600	1080
111-731	312
111-6191	5547
111-6910	160
111-6935	126
111N2C	130
111N4	130
111N4A	130
111N4B	130
111N4C	130
111N6	130
111N6C	152
111N8C	196
111P3B	218
111P5	219
111P5C	104
111P7C	104
111T2	154
112-000088	123AP
112-000172	159
112-000185	159
112-000187	159
112-000267	160
112-001	100
112-002	126
112-003	102
112-004	102
112-0011A	123AP
112-011A	123AP
112-034923	121
112-1A82	123AP
112-2	129
112-2A	129
112-7	159
112-7(RCA)	159
112-8	159
112-8(RCA)	159
112-10	159
112-12(RCA)	159
112-361	128
112-362	224
112-363	130
112-500-0-50	177
112-500-0-501	177
112-520	108
112-521	108
112-522	108
112-523	123AP
112-524	121
112-525	128
112-526	224
112-527	224
112-601-0-102	116
112-826	116
112-200525	102
112-202147	121
112-203053	128
112-203055	130
112-203391	199
112-7292955	121
113-039	116
113-118	123
113-321	116
113-392	116
113-398	108
113-938	108
113-998	117
113A7739	116
113N1AG	172A
113N2	172A
114-013	116
114-1(PHILCO)	192
114-4-2020-14500	116
114-118	108
114-267	108
114-42020-14500	116
114A-1-82	121
114N2P	184
114N4P	103A
114N4U	103A
114P1P	185
114P3P	158
114P3U	158
115	290A
115-039	116
115-063	121
115-1	123
115-4	123
115-4(RCA)	123AP
115-13	123AP
115-13(RCA)	123AP
115-14(RCA)	123AP
115-225	123AP
115-227	160
115-228	160
115-229	160
115-268	121
115-269	121
115-275	126
115-281	121MP
115-282	121MP
115-283	121MP
115-284	121MP
115-559	116
115-599	116
115-867	117
115-875	123AP
115C5	784
115C-8	912
115E	290A
115F	290A
115Z4	145A
116-080	108
116-052	116
116-068	127
116-072	126
116-073	108
116-074	123AP
116-075	124
116-078	123AP
116-079	108
116-082	108
116-083	108
116-085	123AP
116-086	127
116-087	127
116-088	127
116-089	127
116-091	102A
116-092	123AP
116-1	124
116-198	108
116-199	108
116-200	108
116-201	102A
116-202	160
116-203	102A
116-206	102A
116-207	160
116-208	160
116-209	160
116-588	123AP
116-683	160
116-684	160
116-685	102A
116-686	102A
116-687	103A
116-756	126
116-757	102A
116-875	123AP

PART NUMBER	NTE REPLACEMENT
116-997	102A
116-4365	177
116,666	519
116C3475	181
117-1	124
117-2	158
117-2(HEATHKIT)	158
117-6(HEATHKIT)(NPN)	103A
117-6(HEATHKIT)(PNP)	102A
117-9(HEATHKIT)(NPN)	184
117-9(HEATHKIT)(PNP)	185
117-134-11	116
117-A40	504
117-A40-7350	504
118-02900	519
118-030	177
118-02902	519
118-1	108
118-2	108
118-3	108
118-4	108
119-0016	105
119-0054	123AP
119-0055	159
119-0056	123AP
119-0068	175
119-0075	181
119-0077	128
119-6511	116
120	85
120-002012	102A
120-002013	102A
120-002014	102A
120-004048	126
120-004061	125
120-000190	160
120-001300	116
120-005300	614
120-001301	110MP
120-004503	116
120-006604	159
120-00190	126
120-00-19	102
120-001-300	116
120-002	912
120-001190	160
120-001192	100
120-001195	102
120-001795	102
120-001798	195A
120-00195	102A
120-00213	126
120-002213	160
120-002214	160
120-002216	160
120-002513	126
120-002515	126
120-002518	126
120-002520	158
120-002521	102A
120-002656	126
120-002748	102A
120-003147	177
120-003148	116
120-003149	125
120-003150	131
120-003151	195A
120-004480	123AP
120-004482	123AP
120-004483	123AP
120-004492	126
120-004493	158
120-004494	158
120-004495	158
120-004496	108
120-004497	108
120-004498	109
120-004499	109
120-004629	178MP
120-004722	160
120-004723	108
120-004724	108
120-004725	108
120-004727	102A
120-004728	158
120-004729	102A
120-004730	109
120-004877	177
120-004878	116
120-004879	139A
120-004880	123AP
120-004881	108
120-004882	123AP
120-004883	123AP
120-004884	191
120-004885	224
120-004886	224
120-004887	131
120-004888	101
120-005291	108
120-005292	108
120-005293	108
120-005294	108
120-005295	108
120-005296	108
120-005297	108
120-005298	108
120-005299	109
120-01193	102A
120-02213	160
120-1	123AP
120-2	123AP
120-3	123AP
120-7	123AP
120-7(RCA)	123AP
120-8	123AP
120-8(RCA)	123AP
120-8A	123AP
120-14(RCA)	123AP
120-15(RCA)	123AP
120-190	102A
120A02	177
120A11	177
120A13	177
120BLU	123AP
120P1	159
120P1M	159
121	222
121(SEARS)	123AP
121-01034	171
121-0041	137A
121-1	159
121-1RED	159
121-6	103A
121-7	103A
121-8	103A
121-9	102A
121-10	102A
121-11	102A
121-12	102A
121-14	100
121-14(COLUMBIA)	128
121-15	101
121-16	101
121-17	101
121-18	124
121-19	102A
121-21	101
121-22	101
121-24	101
121-25	101
121-26	101
121-27	102
121-31	109
121-33	102A
121-34	102A
121-43	102A
121-44	126
121-45	126
121-46	102A
121-47	102A
121-48	160
121-49	160
121-50	101
121-51	101
121-52	102A
121-53	100
121-54	126
121-59	103A
121-60	103A
121-61	102A
121-62	126
121-63	160
121-64	102A
121-65	126
121-66	126
121-67	126
121-68	102A
121-69	102A
121-70	101
121-71	101
121-72	102A
121-73	160
121-74	160
121-75	160
121-76	160
121-78	160
121-79	160
121-80	100
121-81	100
121-82	100
121-83	100
121-84	100
121-85	100
121-86	100
121-87	100
121-88	100
121-89	100
121-90	100
121-91	100
121-92	100
121-93	100
121-94	100
121-95	102
121-96	102
121-100	101
121-101	160
121-102	160
121-103	160
121-104	160
121-105	160
121-106	102
121-107	102
121-113	229
121-119	160
121-120	158
121-128	100
121-132	160
121-134	160
121-135	160
121-136	160
121-137	160
121-138	160
121-139	160
121-145	100
121-146	100
121-147	100
121-148	102A
121-150	126
121-151	102A
121-152	102A
121-153	126
121-154	126
121-157	160
121-160	100
121-161	126
121-162	126
121-163	102A
121-164	102A
121-167	158
121-170	159
121-171	121
121-179	160
121-180	160
121-181	160
121-184	102A
121-185	160
121-186	126
121-187	126
121-189	126
121-190	102A
121-191	102A
121-192	102A
121-193	102A
121-195B	123AP
121-200	102
121-205	100
121-206	100
121-207	100
121-208	100
121-209	100
121-210	100
121-211	100
121-212	100
121-213	100
121-219	100
121-220	100
121-221	100
121-222	100
121-225	100
121-226	102A
121-227	102A
121-228	126
121-229	126
121-230	126
121-231	126
121-232	126
121-233	126
121-234	100
121-235	100
121-236	100
121-237	103A
121-238	103A
121-239	102A
121-240	126
121-240X	102A
121-241	154
121-242	160
121-243	160
121-244	160
121-245	102A
121-246	102A
121-247	103A
121-248	103A
121-254	100
121-256	126
121-257	126
121-258	126
121-259	126
121-260	126
121-261	126
121-262	126
121-263	126
121-266	102
121-267	102
121-268	160
121-269	160
121-270	121
121-271	121
121-272	102A
121-273	102A
121-274	102A
121-275	102A
121-276	123
121-277	123
121-278	123
121-279	128
121-283	161
121-284	160
121-286	123AP
121-287	102
121-288	123AP
121-289	126
121-290	126
121-291	102A
121-292	126
121-293	126
121-294	126
121-295	126
121-296	126
121-297	126
121-298	126
121-299	126
121-300	102A
121-301	102A
121-302	101
121-303	108
121-304	160
121-305	102A
121-306	102A
121-307	102A
121-308	121
121-309	102A
121-310	102A
121-311	102A
121-311B	102A
121-311C	158
121-311D	158
121-311E	158
121-311F	158
121-312	160
121-313	160
121-314	102A
121-315	124
121-316	108
121-317	108
121-318	108
121-318L	108
121-319	102A
121-320	102A
121-321	108
121-327	102A
121-328	102A
121-329	160
121-330	160
121-331	160
121-332	160
121-333	160
121-334	160
121-335	160
121-336	160
121-345	108
121-347	102A
121-348	102A
121-349	160
121-350	160
121-351	160
121-352	160
121-353	160
121-354	100
121-356	160
121-357	160
121-358	160
121-359	160
121-360	126
121-361	154
121-362	158
121-363	121
121-364	123AP
121-365	123AP
121-366	123AP
121-367	123AP
121-368	158
121-369	123AP
121-370	127
121-371	121
121-372	102
121-373	158
121-373B	158
121-373C	158
121-373D	158
121-373E	158
121-373F	158
121-373G	158
121-373H	158
121-373I	158
121-373J	158
121-373K	158
121-373L	158
121-373M	158
121-373N	158
121-373O	158
121-373P	158
121-373Q	158
121-374	102A
121-375	102A
121-377	161
121-378	161
121-379	161
121-380	161
121-381	126
121-382	121
121-383	161
121-384	160
121-385	160
121-388	158
121-389	121
121-395	102A
121-396	102A
121-397	100
121-398	121
121-399	102A
121-400	158
121-401	158
121-401BROWN	176
121-401ORANGE	176
121-401RED	176
121-401YELLOW	176
121-403	158
121-404	123AP
121-406	179
121-408	102A
121-409	102A
121-410	102
121-411	160
121-412	160
121-413	160
121-414	160
121-415	160
121-415B	160
121-416	158
121-417	159
121-418	179
121-418BLUE	179
121-418GREEN	179
121-418ORANGE	179
121-418VIOLET	179
121-418YELLOW	179
121-419	179
121-420	102A
121-421	158
121-422	123
121-423	123AP
121-425	158
121-425A	158
121-425B	158
121-425C	158
121-425D	158
121-425E	158
121-425F	158
121-425G	158
121-425H	158
121-425I	158
121-425J	158
121-425K	158
121-425L	158
121-425M	158
121-425N	158
121-425O	158
121-425P	158
121-425Q	158
121-426	160
121-427	160
121-428	160
121-429	160
121-430	123AP
121-430B	123AP
121-430CL	123AP
121-431	128
121-432	160
121-433	123AP
121-433A	123AP
121-433CL	123AP
121-434	289
121-434H	289
121-435	123AP
121-436	124
121-437	102A
121-441	159
121-442	123AP
121-444	159
121-445	154
121-446	159
121-447	123AP
121-448	123AP
121-449	162
121-450	123AP
121-451	124
121-452	163A
121-453	161
121-460	161
121-461	161
121-462	161
121-470	161
121-471	161
121-472	108
121-473	154
121-480	107
121-481	108
121-482	108
121-483	108
121-490	102A
121-491	126
121-492	126
121-493	126
121-494	126
121-495	159
121-496	159
121-497	159
121-497WHT	159
121-498	108
121-499	123AP
121-499-01	123AP
121-499-01A	123AP
121-499-01C	123AP
121-499-1	123AP
121-499-1A	123AP
121-499A	123AP
121-500	161
121-501	161
121-502	161
121-503	229
121-504	229
121-505	319P
121-505(3LEADS)	161
121-506	319P
121-507	319P
121-508	319P
121-509	161
121-510	161
121-520	108
121-521	161
121-521(MOTOROLA)	123AP
121-522	233
121-523	161
121-524	229
121-524A	233
121-526	233
121-538	160
121-538B	160
121-539	160
121-540	160
121-540B	160
121-541	160
121-541B	160
121-542	160
121-542B	160
121-543	102A
121-544	102A
121-546	108
121-546B	108
121-547	108
121-551	229
121-552	160
121-553	160
121-554	126
121-555	126
121-557	103A
121-558	103A
121-560	108
121-580	161
121-581	123AP
121-582	124
121-582GREEN	124
121-583	161
121-585	107
121-585B	107
121-587	123AP
121-588	175
121-600	123AP
121-600(ZENITH)	154
121-601	160
121-602	159
121-603	159
121-608	159
121-610	123AP
121-612	107
121-612-16	108
121-613	108
121-613-16	108
121-614	108
121-614-9	108
121-615	106
121-616	108
121-629	123AP
121-630	108
121-632	102A
121-633	102A
121-634	102A
121-635	102A
121-636	102A
121-636B	158
121-636C	158
121-636D	158
121-637	108
121-638	108
121-638B	108
121-639	123AP
121-639CL	128
121-640	102A
121-641	103A
121-642	229
121-643	229
121-644	108
121-645	161
121-646	123AP
121-647	123AP
121-648	123AP
121-649	123AP
121-650	103
121-651	161
121-652	123AP
121-653	161
121-654	159
121-655	229
121-656	229
121-657	123AP
121-658	108
121-659	229
121-660	123AP
121-661	159
121-662	123AP
121-663	102
121-664	128
121-665	130
121-667	159
121-668	123AP
121-671	123AP
121-672	123AP
121-673	103
121-674	158
121-675	123AP
121-676	128
121-677	123AP
121-678	123AP
121-678GREEN	123AP
121-678YELLOW	123AP
121-679	159
121-679GREEN	159
121-679YELLOW	159
121-680	159
121-681	159
121-682	159
121-683	159
121-684	229
121-687	107
121-692	161
121-695	123AP
121-697	160
121-698	160
121-699	159
121-699-01	159
121-699-02	159
121-699A	159
121-701	123AP
121-702	123AP
121-703	293
121-704	161
121-705	160
121-706	123AP
121-707	185
121-708	184
121-709	185
121-710	184
121-711	123AP
121-712	157
121-713	124
121-714	160
121-716	234
121-719	152
121-722	128
121-723	107
121-725	159
121-726	130
121-726A	130
121-730	123AP
121-731	132
121-732	161
121-733	229
121-734	102
121-735	229
121-735B	107
121-737	123AP
121-737CL	128
121-739	107
121-741	316
121-742	108
121-743	154
121-743-01	191
121-743-01(T05)	154
121-743-01(X51)	191
121-744	154
121-745	123AP
121-746	159
121-748	123AP
121-751	123AP
121-752	172A
121-753	312
121-754	229
121-755	190
121-756	312
121-758	164
121-758X	164
121-759	165
121-759X	165
121-760	161
121-761	161
121-762	101
121-762CL	103A
121-764	123AP
121-765	159
121-765-01	159
121-766	128
121-766-01	123AP
121-767	199
121-767CL	123AP
121-768	123AP
121-768CL	123AP
121-770	152
121-770CL	196
121-770X	152
121-772	152
121-772CL	196
121-773	123AP
121-773CL	128
121-774	159
121-774CL	129
121-775	161
121-776	154
121-777	154
121-777-01	154
121-779	107
121-782	222
121-783	222
121-784	222
121-785	222
121-786	222
121-787	222
121-787-01	222
121-792	154
121-793	121
121-801	159
121-802	161
121-803	153
121-804	152
121-805	184
121-806	152
121-807	161
121-808	184
121-809	152
121-812	123AP
121-819	108
121-821	164
121-822	171
121-823	161
121-824	161
121-825	108
121-826	222
121-827	108
121-829	162
121-830	100
121-831	238
121-834	108
121-835	108
121-836	123AP
121-837	123AP
121-838	159
121-840	108
121-841	108
121-843	190
121-843A	192
121-844	128
121-845	129
121-846	108
121-847	161
121-848	108
121-849	107
121-850	123AP

PART NUMBER	NTE REPLACEMENT
121-851	108
121-853	196
121-853X	186
121-854	152
121-855	108
121-855-01	229
121-856	123AP
121-857	108
121-858	132
121-860	133
121-861	159
121-862	123AP
121-863	123AP
121-865	159
121-868	171
121-868-01	171
121-868-02	171
121-869	108
121-871	194
121-872	108
121-873	153
121-874	152
121-875	159
121-876	123AP
121-877	123AP
121-878	128
121-879	129
121-880	196
121-881	123AP
121-883	161
121-884	108
121-885	107
121-886	153
121-887	152
121-888	123AP
121-889	123AP
121-895	123AP
121-895A	123AP
121-899	108
121-900	108
121-906	162
121-907	229
121-909	108
121-910	108
121-911	157
121-913	123AP
121-914	123AP
121-915	123AP
121-916	123AP
121-924	229
121-925	108
121-926	153
121-927	152
121-928	199
121-929	229
121-930	229
121-931	123AP
121-932	152
121-943	229
121-944	123AP
121-945	229
121-946	107
121-950	229
121-951	229
121-952	159
121-953	222
121-954	229
121-958	108
121-966	152
121-966-01	152
121-966-02	152
121-966-03	152
121-967	196
121-969	292
121-969-02	153
121-970	291
121-970-02	291
121-972	123AP
121-972-01	123AP
121-973	159
121-973A	159
121-974	107
121-975	123AP
121-975A	123AP
121-976	152
121-977	153
121-978	159
121-978-01	159
121-978-03	159
121-978-03C	159
121-978A	159
121-980	189
121-980-01	189
121-982	123AP
121-983	107
121-984	107
121-985	165
121-986	159
121-986A	159
121-987	291
121-987-02	291
121-987A	196
121-988	292
121-988-02	292
121-989	171
121-990	171
121-992	291
121-992-01	291
121-994	292
121-995	229
121-996	163A
121-996-02	152
121-997	153
121-998	313
121-999	313
121-1000	229
121-1001	229
121-1003	238
121-1005	159
121-1006	152
121-1007	189
121-1008-01	384
121-1010	108
121-1011	108
121-1012	262
121-1013	261
121-1014	191
121-1016	159
121-1017	289
121-1018	107
121-1019	159
121-1019-01	159
121-1019-01A	159
121-1019-1	159
121-1019A	159
121-1020	194
121-1020A	194
121-1021	298
121-1023	229
121-1024	222
121-1025	108
121-1028-01	375
121-1029	165
121-1029-01	165
121-1029-02	165
121-1030	222
121-1032	102
121-1033	238
121-1034	171
121-1034-01	171
121-1034-1	171
121-1034A	171
121-1035	297
121-1035A	297
121-1036	298
121-1037	171
121-1040	123AP
121-1040-01	123AP
121-1040-01A	123AP
121-1040A	123AP
121-1043	159
121-1044	107
121-1045	104
121-1048	312
121-1049	291
121-1051	85
121-1059	159
121-1059A	159
121-1061	291
121-1061-01	123AP
121-1062	159
121-1063	171
121-1064	159
121-1064A	159
121-1065	123AP
121-1065A	123AP
121-1072	291
121-1072-01	291
121-1072-1	291
121-1082-02	152
121-1084	123AP
121-1084A	123AP
121-1086-01	2312
121-1092	165
121-1101	159
121-1101-01	288
121-1101-01A	288
121-1101-02	159
121-1101A	159
121-1102	290A
121-1102A	290A
121-1109	2312
121-1112-01	292
121-1114	89
121-1124	121
121-1133	2409
121-1134	121
121-1140	399
121-1140A	399
121-1141	2302
121-1141-01	2302
121-1141-02	2302
121-1145	290A
121-1145A	290A
121-1146	287
121-1146A	123AP
121-1148	2302
121-1158	23
121-1158A	23
121-1232	123AP
121-1232A	123AP
121-1330	100
121-1350	100
121-1360	100
121-1390	100
121-1400	100
121-1410	101
121-1440C	399
121-5065	123AP
121-505501	123AP
121-Z9000	123
121-Z9000A	123AP
121-Z9001	238
121-Z9002	184
121-Z9003	159
121-Z9004	102A
121-Z9005	129
121-Z9006	121
121-Z9045	287
121-Z9046	288
121-Z9047	291
121-Z9048	292
121_975	123AP
121_990	171
121G1241	506
121G3019	123AP
121G3020	123AP
121G3051	311
121G3051D	311
121G3115	311
121G3123	311
121GI241	506
121GL241	506
121J688-1	107
121J688-2	107
121S2	6402
121U2AT	6402
121U3AC	6402
122-1	123AP
122-2	125
122-2(D10)	125
122-2N1B	163A
122-6	123AP
122-6(RCA)	123AP
122-7	199
122-7(RCA)	199
122-80	116
122-229	100
122-1028	105
122-1028A	105
122-1625	121
122-1648	126
122-1962	103
122-A484	108
122GRN	159
122N2	128
122YEL	159
123-003	133
123-004	123AP
123-005	199
123-006	159
123-007	199
123-008	236
123-009	235
123-010	123AP
123-020	139A
123-011	186
123-011A	186
123-012	289
123-013	109
123-015	109
123-016	177
123-017	172A
123-017(DIODE)	519
123-018	506
123-019	5072A
123-021	116
123-022	177
123-024	519
123-025	177
123-1033	238
123B-002	186
123B-003	177
123B-004	5072A
123B-005	137A
123B-006	5075A
123N1	164
123S425	128
123S-437	128
124-0028	125
124-0165	5994
124-0178	116
124-1	121
124-N16	101
124J490	116
124N1	101
124N16	123AP
125-1	106
125-4	127
125-4(RCA)	127
125-121	128
125-402	121
125-403	121
125-403(FEDERAL)	179MP
125-410	175
125-423(FEDERAL)	179MP
125-425C	158
125-655	229
125-1145	290A
125-A000-F01	5883
125-B415	152
125A000F01	5883
125A134	102A
125A137	128
125A137A	128
125AS251	175
125B132	123AP
125B133	159
125B139	128
125B410	175
125B-403	179
125C3	784
125C3RB	784
125C211	123AP
125C-310	6402
125P1	159
125P1M	159
125P116	159
125PI	159
125PL	159
126-4	116
126-7	116
126-7(ARVIN)	116
126-12	123AP
126-40	909
126-1910	191
126N1	103A
126N2	103A
126P1	158
127	123AP
127-001	194
127-1	5314
127-7	101
127-115	199
127A905F01	5995
128	128
128-853	186
128-9050	130
128A157F01	5995
128A157F02	5995
128C212H01	9951
128C213H01	910
128C830H05	7493A
128N2	128
128N4	108
128WHT	123AP
129-4	176
129-5	121
129-6	104
129-7	104
129-8	102A
129-8-1	102A
129-8-1A	102A
129-8-2	102A
129-9	121
129-10	121
129-11	100
129-13	121
129-14	123
129-15	123
129-16	123AP
129-17	102
129-18	102
129-20	159
129-21	123AP
129-23	175
129-27	161
129-30	103A
129-31	102A
129-32	102A
129-33	152
129-33(PILOT)	123AP
129-34	159
129-34(PILOT)	159
129BRN	123AP
129N1	161
129WHT	123AP
130	107
130-013	5695
130-104	121
130-105	5081A
130-112	107
130-138	108
130-142-01	177
130-144	311
130-146	130
130-149	159
130-150	311
130-152	161
130-172	311
130-174	311
130-185	161
130-191-00	128
130-240	161
130-245	195A
130-338-00	116
130-398-99	116
130-30189	177
130-30192	116
130-30256	125
130-30261	166
130-30265	177
130-30266	177
130-30274	177
130-30281	109
130-30301	109
130-30313	116
130-30702	177
130-40089	101
130-40095	102A
130-40096	103A
130-40214	123AP
130-40215	123AP
130-40216	199
130-40229	109
130-40236	102A
130-40294	123AP
130-40304	108
130-40311	123AP
130-40312	123AP
130-40313	123AP
130-40314	103A
130-40315	159
130-40317	123AP
130-40318	123AP
130-40347	103A
130-40349(NPN)	155
130-40349(PNP)	131
130-40352	102A
130-40357	123AP
130-40362	108
130-40421	108
130-40429	159
130-40439(NPN)	155
130-40439(PNP)	131
130-40456	158
130-40459	108
130-40883	199
130-40896	123AP
130-40901	199
130-40922	123AP
130-V10	107
130-VLO	107
130A17268	116
130ORN	107
130YE	116
131(ARVIN)	108
131(SEARS)	108
131-001007	130
131-000561	128
131-000562	121
131-005807	128
131-005808	129
131-001-007	130
131-005-353-1	197
131-005-807	128
131-005-808	129
131-005353-1	197
131-04560	128
131-043-67	130
131-045-60	128
131-045-61	129
131-04367	130
131-04561	129
131-2	186
131A	116
131A246F01	5995
131A246F02	5995
131AS471	941
131N2	191
131N2(MAGNAVOX)	188
131N2G	152
132-001	102A
132-002	123AP
132-003	171
132-004	123AP
132-005	123AP
132-007	129
132-008	161
132-009	161
132-010	102A
132-020	160
132-030	123AP
132-050	123AP
132-070	130
132-080	184
132-090	102A
132-011	123AP
132-014	171
132-015	108
132-017	123AP
132-018	123AP
132-019	160
132-021	123AP
132-021B	128
132-022	128
132-023	123AP
132-024	185
132-025	162
132-026	123AP
132-027	160
132-028	124
132-029	234
132-031	234
132-032	129
132-033	124
132-038	128
132-039	129
132-041	123AP
132-042	123AP
132-045	221
132-046	184
132-047	221
132-049	132
132-051	123AP
132-052A	172A
132-054	123AP
132-055	123AP
132-056	159
132-057	123AP
132-059	124
132-062	123AP
132-063	123AP
132-065	175
132-066	128
132-069	123AP
132-072	184
132-074	159
132-075	123AP
132-076	161
132-077	123AP
132-078	157
132-079	185
132-081	184
132-082	161
132-085	130
132-087	161
132-2	151A
132-3	152
132-4	152
132-4(RCA)	152
132-5	196
132-5(RCA)	196
132-90	102A
132-185	161
132-501	123AP
132-502	123AP
132-503	123AP
132-504	123AP
132-515	124
132-516	124
132-521	124
132-522	124
132-523	124
132-524	124
132-525	124
132-526	124
132-539	123AP
132-540	123AP
132-541	130
132-542	130MP
132-B3511	113A
132N1	128
133-001	726
133-001B	726
133-004	725
133-0021-0	904
133-1	188
133-1(RCA)	188
133-3	152
133P195	7430
133P840	74181
133P80057	909
133P80067	941D
133P80104	941M
133P80424	943M
134-1	189
134-1(RCA)	189
134-1P	106
134B1038-4	199
134B1038-8	199
134B1038-13	199
134B1038-21	123AP
134B1038-22	199
134B1040-7	192
134P1	234
134P1(REMOTE)	193
134P1(VID)	106
134P1A	159
134P1AA	129
134P1M	159
134P2	129
134P4	159
134P4AA	159
134P4M	159
134P6	106
135-1(RCA)	130
135-3	116
135C	116
135C4L	116
135C44322-542	123AP
135H1M	171
135N1	154
135N1M	154
135ORN	123AP
135P4	117
136-3(RCA)	172A
136-12	128
136P1	106
136RED	123AP
137	106
137(ADMIRAL)	159
137-003	5697
137-12	106
137-684	125
137-718	116
137-737	5802
137-759	145A
137-824	109
137-828	125
138-4	123AP
138-5016	5035A
139-4	108
139DDF	29
139N1	229
139N1D	229
139N2	161
140-0007	123AP
140-013	116
140N1	130
140N1C	130
140N2	130
141 402	161
141-003	109
141-078-0001	177
141-4	123AP
141-402	161
141-430	123AP
142	177
142-001	123AP
142-002	199
142-002(RECT)	125
142-002(REGENCY)	199
142-003	199
142-004	152
142-005	289
142-006	186A
142-006(DIODE)	177
142-006(REGENCY)	186A
142-008	152
142-009	177
142-010	177
142-011	109
142-012	139A
142-013	116
142-014	116
142-015	5075A
142-016	5071A
142-3	123AP
142-4	123AP
142N1	289
142N1P	161
142N3	123AP
142N3P	123AP
142N3T	123AP
142N4	123AP
142N5	123AP
142N6	108
143	131
143-1	912
143-12	123AP
144-1	519
144-3	177
144-4	154
144-12	123AP
144A-1	121
144A-1-12	121
144A-1-12-8	121
144A-1-12-3	121
144N1	171
144N1G	171
144N1G(AMP)	171
144N1G(VID)	171
144N1P	171
144N2	171
144N3	171
144N4	154
145-2	171
145-2(SYL)	171
145-12	106
145-100	140A
145-118	139A
145-470	5088A
145-T1B	126
145A9254	116
145A9786	116
145N1	161
145N1(LAST LF)	233
145N1P	161
145NIP	123AP
145T1B	160
146-1	171
146-12	123AP
146-T1	121
146B-3	121MP
146B-3-12	121MP
146B-3-12-8	121MP
146D1	178MP
146D1B112	178MP
146D-1	177
146N3	123AP
146N5	123AP
146T1	104
147-7009-01	159
147-7016-01	199
147-7031-01	293
147-7040-01	1115A
147-7043-01	1232
147-T1	121
147N1	293
147P2	294
147T1	104
148-3	123AP
148-3(XSTR)	123AP
148-3XSTR	123AP
148-12	106
148-134622	105
148N1	128
148N2	123AP
148N3	128
148N212	123AP
148P-2	102A
148P-2-12	102A
148P-2-12-8	102A
149-10	152
149-12	133
149-142-G1	177
149L-4	102A
149L-4-12	102A
149L-4-12-8	102A
149N1	184
149N2	184
149N2B	241
149N2D	152
149N4	184
149N4B	241
149N2002D	152
149N2004	152
149P1	185
149P1B	242
149P1D	152
149P3	185
149P4B	242
149P2001D	153
149P2003	153
150	116
150-001-005	109
150-001-9-007	109
150-001-9-005	109
150-002-9-001	109
150-004-9-001	109
150-005-9-001	109
150-006-9-001	109
150-030-9-002	177
150-040-9-002	177
150-012-9-001	109
150-013-9-001	109
150-014-9-001	109
150-015-9-001	109
150-018-9-001	116
150-022-9-001	116
150-066-9-001	177
150-1	177
150-1N	161
150-12	133
150D	145A
150N1	161
150N2	123AP

PART NUMBER	NTE REPLACEMENT
150N3	161
150R1B	156
150R2B	5802
150R3B	5803
150R4B	5804
150R5B	5806
150R6B	5806
150R7B	5808
150R8B	156
150R9B	156
150R10B	156
151-0040	101
151-0040-00	101
151-001-9-001	177
151-002-9-001	177
151-006-9-001	147A
151-030-9-004	614
151-030-9-009	177
151-030-9-005	116
151-030-9-006	177
151-030-9-001	177
151-030-9-003	137A
151-030-9-002	178MP
151-040-7-003	116
151-040-9-002	177
151-040-9-001	177
151-040-9-003	116
151-060-9-001	177
151-0087-00	159
151-0096-00	128
151-0103-00	123AP
151-0140	130
151-0140-00	130
151-0190-00	123AP
151-0208	129
151-0208-00-AA	129
151-0210	124
151-0210-00	124
151-0250-00	194
151-0302-00	123AP
151-0407-00	194
151-0410-00	234
151-0I49	175
151-011-9-001	177
151-011-9-011	116
151-012-9-001	139A
151-013-9-001	178MP
151-014-9-001	507
151-014-9-1	177
151-015-9-001	519
151-018-9-001	116
151-021-001	177
151-021-9-001	177
151-022-9-002	177
151-022-9-001	177
151-023-9-001	116
151-024-9-001	177
151-025-9-001	117
151-029-9-003	116
151-029-9-002	177
151-029-9-001	177
151-031-9-001	137A
151-031-9-006	139A
151-031-9-003	137A
151-032-004	177
151-032-9-004	177
151-032-9-001	177
151-032-9-002	177
151-034-9-001	177
151-035-0-003	177
151-035-9-001	177
151-035-9-003	177
151-035-9-004	177
151-039-9-003	614
151-042-9-001	177
151-045	126
151-045-9-002	177
151-045-9-003	506
151-045-9-001	116
151-046-9-001	116
151-049-9-001	177
151-049-9-002	177
151-051-9-001	519
151-059-9-001	177
151-062-9-001	614
151-064-9-002	177
151-064-9-001	177
151-066-9-001	177
151-067-9-001	519
151-069-9-001	177
151-072-9-001	177
151-096-1C	128
151-0124-00	159
151-0127-00	123AP
151-0136	128
151-0136-00	128
151-0136-02	128
151-0138	108
151-0141	175
151-0141-00	175
151-0148	175
151-0149	175
151-0149-1A	175
151-0188-00	159
151-0211	128
151-0211-00	128
151-0211-01	128
151-0217	175
151-0217-1	175
151-0219-00	234
151-0221-00	159
151-0221-02	159
151-0223-00	123AP
151-0224-00	123AP
151-0238	101
151-0241	124
151-0241-00	124
151-0251	124
151-0259-00	107
151-0274-00	194
151-0275	181
151-0275-00	181
151-0315	124
151-0315-00	124
151-0316	124
151-0325-00	159
151-0336-00	130
151-0336-00-A	130
151-0337-00	130
151-0337-00-A	130
151-0341-00	199
151-0341-00-A	199
151-0342-00	234
151-0347-00	194
151-0417-00	106
151-0424-00	123AP
151-0427-00	107
151-0453-00	234
151-0456-00	199
151-0458-00	159
151-0459-00	159
151-0471-00	107
151-1	552
151-3	552
151-4	552
151-6	123AP
151-9	525
151-32-9-004	177
151-148-00-BC	175
151-150	128
151-150-1B	128
151-211	128
151-267-9-001	177
151-728-STT	435K28
151-730-STT	435K30
151-742-STT	435K42
151-764-STT	435K64
151-1002	126
151M11	108
151N1	108
151N2	123AP
151N4	123AP
151N5	123AP
151N11	108
151N116	108
151RA30	5374
151RA60	5374
151RA80	5375
151RA100	5375
151RA120	5375
151RB60	5374
151RB80	5375
151RB100	5375
151RB120	5375
151RL50	5374
151RL60	5374
151RL80	5375
151RL100	5375
151RL110	5375
151RL120	5375
151RM10	5374
151RM20	5374
151RM30	5374
151RM40	5374
151RM50	5374
151RM60	5374
151RM80	5375
151RM100	5375
152-006-9-001	147A
152-008-7-001	614
152-008-9-001	139A
152-0047	5804
152-0047-00	5804
152-0061-00	177
152-012-9-001	139A
152-019-9-001	137A
152-021-9-001	141A
152-029-9-002	147A
152-042-9-001(FET)	222
152-042-9-002	5071A
152-042-9-001	5072A
152-047	116
152-047-9-001	137A
152-047-9-004	137A
152-051-9-001	139A
152-051-9-002	137A
152-052-9-002	137A
152-054-9-001	5072A
152-057-9-001	5075A
152-079-001	135A
152-079-9-001	135A
152-079-9-003	137A
152-079-9-002	137A
152-079-9-004	138A
152-082-9-001	139A
152-0154	5642
152-0242-00	177
152-0333-00	519
152-12	123AP
152-141-1	519
152-221011	102A
152D003930	943M
152N2	130
152N2C	181
152N-2	181
152P1B	218
152P1C	180
152SC711(D)	5071A
153-004-9-001	614
153-008-9-001	614
153-008-9-002	601
153-011-9-001	605A
153-9	128
153D040010	4001B
153N1	196
153N1C	152
153N2C	152
153N4C	152
153N5C	152
153N6	152
154-001-9-001	614
154A3675-105	102
154A3676	126
154A3676-205	102
154A3677	126
154A3679	102
154A3679-5110	126
154A3680	121
154A3992	116
154A5941	123AP
154A5943	124
154A5943-1	124
154A5944-410	123AP
154A5944-413	199
154A5945-519	199
154A5946	123AP
154A5946-622	128
154A5946-624	123AP
154A5946-667	129
154A5947-7732	106
154A8681	102
154T1	160
154T1A	160
154T1B	160
154WA	519
154WK	519
155D04066B	4066B
155N1	196
155T1	160
156	123AP
156-0013-00-A	910
156-0015-00	909
156-0017	903
156-0017-00	903
156-0048-00	912
156-0049-00	941
156-0053-00	923
156-0067-00	941M
156-0067-06	941M
156-0071-00	923D
156-032	130
156-043	130
156-043A	130
156-053	130
156-063	130
156-083	181
156-084	181
156-0148-00	7404
156-0151-00	915
156-0176-00	309K
156-0197	912
156-0197-00	912
156-0197-3306	912
156-83	181
156-104	181
156T1	160
156WHT	123AP
157	159
157-009-9-001	5072A
157-100	5019A
157-120	5021A
157-180	5027A
157-439	5008A
157-870	150A
157-1120	5021A
157-8689	615P
157N3	188
157P4	189
157T1	160
157T1A	160
157YEL	159
158(SEARS)	123AP
158-045-0027	128
158-1(RCA)	797
158-2(RCA)	797
158-3	159
158-10	124
158-46-6879	123AP
158P1M	129
158P2	159
158P2M	159
158P3	159
159-12	106
159T1	160
160	142A
160-8	123AP
160P08908	165
160T1	160
161-001I	123AP
161-009I	123AP
161-009J	123AP
161-040G	198
161-040H	288
161-040I	288
161-040J	288
161-050H	159
161-011G	123AP
161-011H/1	85
161-011J	123AP
161-012H	159
161-012J	159
161-014H	287
161-014H/1	85
161-015G	288
161-015H	288
161-016(H)	123AP
161-016H	123AP
161-016J	85
161-016J/K	85
161-016K	123AP
161-037J	85
161-039G	123AP
161-039H	123AP
161-039I	123AP
161-039J	123AP
161-041H	287
161-041I	287
161-041J	287
161-042G	159
161-042H	153
161-042J	152
161-043G	153
161-043H	153
161-044D	375
161-044D/E	375
161-044E	375
161-046G	198
161-046G(GOLD STAR)	376
161-047(H)	152
161-047G	152
161-047H	152
161-051G	399
161-051H	399
161-053G	376
161-053G/H	376
161-053H	85
161-054A	375
161-061H	123AP
161-0161/H	123AP
161-0171	85
161-0461	198
161-2NC	130
161-5	196
161-249-1001	949
161-INC	130
161-LNC	130
161N1C	130
161N2	130MP
161N4	130
161N4C	130
161T1	160
161T2	108
162-005A	116
162-045A	5306
162-18	3041
162-18-0	3041
162J2	116
162N2	184
162P1	185
162T1	160
162T2	108
163	508
163J2	116
164-003-A	605A
164-003A	605A
164D7406P0	7406
164J2	116
165	113A
165-1A82	160
165-2A82	103A
165-4A82	101
165-432-2-48-1	519
165A4378P2	177
165A4383	123AP
165A-182	160
165B-182	160
165C-182	121
165J2	116
165N1	123AP
166-1A82	102A
166-2A82	102A
166-3A82	102A
166J2	116
167-001A	712
167-001B	712
167-006B	615P
167-013A	749
167-014A	747
167-018A	712
167-019A	712
167-9	192
167J2	125
167LM1011N	2003
167N1	123AP
167N2	123AP
168-9	193
168-107-001	177
168J2	156
168N1	123AP
168P1	121MP
169-257	124
169-284	124
170(RCA)	161
170-1	177
170-9	128
171-001-9-001	121
171-003-9-001	124
171-015-9-001	121
171-016-9-001	131
171-1	552
171-2	116
171-9	129
172-001	224
172-001-9-001	224
172-003-9-001A	130
172-003-9-001	130
172-006-9-001	186
172-007-9-001	237
172-008-9-001	237
172-009-9-001	237
172-010-9-001	152
172-011-9-001	186A
172-013-9-001	236
172-014-9-001	152
172-014-9-007	152
172-014-9-003	152
172-024-9-002	235
172-024-9-004	152
172-024-9-003	236
172-024-9-005	130
172-028-9-002	306
172-028-9-001	235
172-029-9-001	236
172-031-9-003	152
172-038-9-003	186A
172-038-9-002	235
172-038-9-001	295
172-044-9-001	152
173-1	133
173-1(SYLVANIA)	132
173-15	5075A
173A04490-1	108
173A04490-2	108
173A419-2	121
173A3936	121
173A3963	121
173A3970	102
173A3981	116
173A3981-1	116
173A4057	123AP
173A4348	102A
173A4349	102A
173A4389-1	102A
173A4390	102A
173A4391	128
173A4393	116
173A4394-1	177
173A4399	123AP
173A4416	123AP
173A4419	121
173A4419-1	121
173A4419-2	121
173A4419-3	121
173A4419-4	121
173A4419-5	121
173A4419-6	121
173A4419-7	121
173A4419-8	121
173A4419-9	121
173A4419-10	121
173A4420	121
173A4420-1	121
173A4420-5	121
173A4421-1	121
173A4422-1	121
173A4424	120
173A4436	121
173A4469	121
173A4470-11	123AP
173A4470-13	123AP
173A4470-32	123AP
173A4473-5	199
173A4483-1	159
173A4483-2	159
173A4489-2	128
173A4490-2	186
173A4490-5	128
173A4490-7	152
173A4491-2	130
173A4491-2A	130
173A4491-4	130
173A4491-5	152
173A4491-7	130
173A4491-8	152
173A-4490-5	128
173A-4490-7	152
173A-4491-5	152
174-002-9-001	103A
174-1	116
174-1(PHILCO)	190
174-2	116
174-2(SYL)	171
174-3	116
174-3A82	100
174-20989-22	130
174-20989-23	124
174-25566-01	129
174-25566-21	128
174-25566-50	128
174-25566-62	129
174-25566-63	128
174-25566-76	128
175-006-9-001	102A
175-007-9-001	102A
175-008-9-001	102A
175-2(PHILCO)	172A
175PA60	5380
175PA80	5381
175PA100	5381
175PA120	5381
175RA60	5374
175RA80	5375
175RA100	5375
175RA120	5375
175RC10	5580
175RC20	5580
175RC30	5582
175RC40	5582
175RC60	5582
176	101
176-003	108
176-003-9-001	108
176-004	128
176-004-9-001	108
176-004-9-002	235
176-005	108
176-005-9-001	108
176-006	108
176-006-9-002	199
176-006-9-001	108
176-007	108
176-007-9-001	108
176-008-9-001	123AP
176-040-9-001	181
176-060-9-002	123AP
176-060-9-003	199
176-060-9-004	123AP
176-060-9-001	161
176-014-9-001	123AP
176-016-9-001	289
176-017-9-001	123AP
176-018-9-001	195A
176-024-9-004	186
176-024-9-003	236
176-024-9-001	123AP
176-024-9-002	235
176-025-9-001	199
176-025-9-002	107
176-026-9-001	229
176-029-9-001	289
176-029-9-003	195A
176-029-9-004	295
176-029-9-002	195A
176-031-9-002	199
176-031-9-001	289
176-037-9-001	229
176-037-9-004	199
176-037-9-003	199
176-037-9-002	299
176-039-9-001	229
176-042-9-004	199
176-042-9-003	199
176-042-9-001	229
176-042-9-005	186
176-042-9-006	289
176-042-9-002	123AP
176-042-9-007	152
176-043-9-002	123AP
176-044-9-001	236
176-044-9-002	316
176-047-9-003	123AP
176-047-9-001	289
176-047-9-002	123AP
176-048-9-002	123AP
176-049-9-002	123AP
176-054-9-001	123AP
176-055-9-004	152
176-056-9-001	161
176-056-9-005	297
176-056-9-003	161
176-062-9-001	199
176-065-9-001	229
176-072-9-005	229
176-073-9-012	236
176-073-9-002	236
176-073-9-003	195A
176-073-9-001	123AP
176-074-9-004	192
176-074-9-002	295
176-074-9-001	229
176-074-9-003	235
176-075-9-001	161
176-075-9-008	306
176-075-9-006	306
176-087-9-001	235
177-001	129
177-001-9-001	129
177-006-9-001	159
177-006-9-002	290
177-007-9-001	234
177-020-9-001	294
177-012-9-001	159
177-018-9-001	234
177-019-9-003	194
177-023-9-001	153
177-025-9-002	106
177-025-9-001	290
177A03	738
177A05	749
177A-1-82	105
177B-1-82	121MP
177C-1-82	121MP
178-1(PHILCO)	193
179-1	177
179-2	177
179-4	140A
179-46445-01	9932
179-46445-02	9933
179-46445-03	9937
179-46445-05	9948
179-46445-06	9949
179-46445-08	9961
179-46445-09	9963
179-46445-10	9094
179-46447-01	910
179-46447-03	909D
179-46447-07	923
179-46447-08	941
179-46447-16	911
179-46447-17	940
179-46447-21	915
179-56227-01	74S112
179-56227-02	74S20
179-56227-03	74S140
179-56227-04	4021B
179-56227-05	4066B
179-56228-02	973D
179-56228-03	941D
179-56228-05	996
179-56228-07	740A
179-56228-11	925
179-56228-12	989
179-56228-15	992
179-56228-18	4050B
180-1	116
180N1	233
180N1P	229
180T2	130
180T2A	130
180T2B	130
180T2C	130
181-000100	703
181-003-9-001	6408
181-1	177
181-1F	177
181-2	519
181-3	519
181-1002	519
181-1003	519
181N1	161
181N1D	161
181N2	161
181N2D	161
181T2A	130
181T2B	130
181T2C	130
182-009-9-001	132
182-014-9-002	133
182-014-9-003	133
182-015-9-001	132
182-021-9-001	132
182-029-9-001	312
182-038-9-001	222
182-039-9-001	312
182-044-9-002	312
182-044-9-001	312
182-045-9-001	312
182-046-9-001	133
182-056-9-001	312
182-138-9-001	222
182B2003JDP1	128
183	324
183P1	129
184-1	506
184-2	506
184A-1	121
184A-1-12	121
184A-1-12-7	121
184A-1L	121
184A-1L8	121
184R	313
184T2C	162
185-001	186
185-002	229
185-003	123AP
185-004	123AP
185-005	199
185-006	289
185-007	152
185-009	123AP
185-010	199
185-011	177
185-012	177
185-013	109
185-014	116
185-015	139A
185-6	116
185-6(RCA)	116
185-9-01	5634
185-9-02	5634
185-736	175
185-Z9002	231
185-Z9003	5529
185-Z9016	308
185-Z9017	310
186-001	229
186-002	123AP
186-003	199
186-004	199
186-005	199
186-006	289
186-007	123AP
186-008	186
186-009	186
186-011	177
186-011(DIODE)	177
186-012	177
186-013	109
186-014	116
186-015	177
186-016	139A
186-1	4016B
186-4-127	103
186B-3	121MP
186B-3-12	121MP
186B-3-127	121MP
186B-3L	121MP
186B-3L8	121MP
186N1	161
186N1(LAST LF)	233
186X0114-001	159
187-1	150A
187-2	151A
187-6	140A
187-7	5081A
188-1(RCA)	123AP
188-5	5675
188-68-35	120

PART NUMBER	NTE REPLACEMENT
188-70-48	120
188-826	121
188B-1-82	160
188C-1-82	100
188P-2	102A
188P-2-12	102A
188P-2-127	102A
188P-2L	102A
188P-2L8	102A
189	108
189-1	165
189L-4	102A
189L-4-12	102A
189L-4-127	102A
189L-4L	102A
189L-4L8	102A
189N1	238
189N1G	238
190N1	190
190N1C	184
190N3	184
190N3C	184
190V039H18	118
192-1A82	105
192-120	142A
192-200	5079A
192-330	147A
192-569	136A
192-1120	142A
195	199
195N1	152
195N1C	152
195N1D	152
195N3	152
195P2	153
195P2C	197
195P4	153
196-654	116
198T013P02	548
199-POWER	121
200	116
200-007	108
200-010	108
200-011	128
200-015	108
200-016	123
200-018	175
200-052	159
200-053	132
200-055	108
200-056	108
200-057	123AP
200-058	123AP
200-064	132
200-076	152
200-12	128
200-846	123AP
200-856(NPN)	103A
200-856(PNP)	102A
200-862	123AP
200-863	123AP
200-6582	156
200-6582-22	117
200A	103
200R1B	156
200R3B	5803
200R5B	5805
200R6B	5806
200R7B	156
200R8B	156
200R9B	156
200R10B	156
200RB4	5804
200X2100-022	1004
200X2110-269	712
200X2120-012	749
200X2120-033	1080
200X2300-033	1471
200X2600-149	615P
200X3110-607	94
200X3145-404	94
200X3151-432	376
200X3162-538	291
200X3172-208	376
200X3174-006	85
200X3174-014	85
200X3174-021	123AP
200X3181-523	85
200X3189-304	389
200X3189-408	238
200X3190-604	107
200X3192-101	287
200X3206-800	376
200X3207-306	375
200X3222-907	287
200X3223-025	399
200X3224-007	199
200X3224-204	376
200X3248-217	399
200X4049-081	153
200X4056-260	290A
200X4082-614	290A
200X4085-415	294
200X4094-001	398
200X4101-500	290A
200X4547-806	291
200X4547-814	375
200X4589-802	89
200X8000-001	109
200X8000-026	109
200X8010-094	519
200X8010-102	605A
200X8010-165	177
200X8100-130	552
200X8130-171	525
200X8220-531	5024A
200X8220-851	5019A
200X8220-878	5018A
200X9120-224	116
200X-4088-415	290A
201	159
201-15	102A
201-25-4343-12	108
201-429-0455	125
201-864-2305	152
201-254323-12	108
201-254323-13	108
201-254343-12	108
201-254343-13	107
201-254343-22	161
201-254343-26	161
201-254343-28	107
201-254343-30	107
201-254343-33	107
201-254343-34	161
201-254343-49	108
201-283818-1	222
201-283818-2	222
201-283818-3	222
201A	160
201A0723	5072A
201B	160
201M	5547
201P	5530
201X2000-118	109
201X2010-144	519
201X2010-159	519
201X2010-165	177
201X2100-119	525
201X2100-126	552
201X2100-164	525
201X2120-009	552
201X2130-234	552
201X2220-118	5018A
201X2220-878	5049A
201X2230-042	5070A
201X3120-216	116
201X3120-255	116
201X3120-316	116
201X3130-109	125
202	158
202(RECT)	5896
202-1	189
202-2	151A
202-5-2300-01810	116
202-5-2300-01710	116
202-5-2320-13110	116(2)
202-5-2450-13540	116
202-5-2470-13540	116
202-5-2500-13541	116
202-5-2720-02015	5313
202-5-2720-04015	5313
202-5-2810-44210	177
202-5-3200-03310	5005A
202-5-3200-04710	5009A
202-5-3200-2410	5000A
202-5-3210-05110	5010T1
202-5-3210-06213	5013A
202-5-3210-05610	5011T1
202-5-3210-12010	5021T1
202-5-3210-13020	5022A
202-5-3210-13010	5022A
202-5-3210-18010	5027A
202-5-3210-16020	5025A
202-5-3210-15020	5024A
202-5-3210-15010	5024A
202-5-3210-22020	5030A
202-5-3230-06820	5071A
202-5-3230-18020	5077A
202-5-3230-22020	5079A
202-5-4620-01010	167
202-5-9110-18820	109
202-5-9531-01010	177
202-5-9600-44610	177
202-3210-05620	5011T1
202A	103
202M	5529
202N1	189
2020(RECT)	5896
202P	5530
202P1	189
202P2	189
202S	5531
203	5029A
203(ZENER)	5029A
203-1	222
203-4	222
203-5-4570-73460	85
203-5-4570-73462	85
203-5-4921-01270	85
203-5-5000-53640	85
203-5-5000-53664	85
203-5-5000-53650	85
203-5-5000-53670	85
203-5-5000-53661	85
203-5-5000-53660	85
203-5-5100-53660	85
203-5-5100-69372	199
203-5-5251-57069	199
203-5-5251-57169	199
203-5-5251-57089	199
203-5-5251-57160	199
203-5-5251-57079	199
203-5-5500-93040	107
203-5-6500-04140	451
203-5-6820-98450	290A
203-5-6830-43850	382
203-5-6840-56050	383
203-5-6870-54566	293
203-5-6870-54556	293
203-5-7000-92970	234
203-5-7230-60850	159
203-5-8530-51450	153
203-5-8570-33050	152
203A6137	137A
203M	5529
203P	5530
203S	5531
204-1	177
204A(SCR)	5521
205-5-9040-44210	177
205-14	375
205-142-G1	178MP
205A2-210	102A
206-5-0151-32010	788
206-5-0171-24010	1214
206-5-0743-35012	1217
206-5-0783-21011	1466
206-5-0834-10214	1228
206-5-1384-192210	1667
206-5-7320-45910	1330
206-5-7340-46170	1331
206-14	398
206-709-001	909
207A	160
207A1	160
207A3	102A
207A7	102A
207A9	108
207A10	123AP
207A14	234
207A16	175
207A16A	175
207A17	199
207A20	104
207A20A	104
207A25	107
207A26	179
207A27	161
207A29	123AP
207A30	152
207A31	123AP
207A32-B	5642
207A33	152
207A35	123AP
207A(SCR)	5470
207B	160
207B(SCR)	5471
207C(SCR)	5472
207D(SCR)	5472
207E(SCR)	5473
207H(SCR)	5485
207K(SCR)	5486
207M	160
207M(SCR)	5487
207V073C04	159
209-1	159
209-30	152
209-31	109
209-32	177
209-846	123AP
209-856(NPN)	103A
209-856(PNP)	102A
209-862	123AP
209-863	123AP
209A(LED)	3007
209P1	159
210ATTF3638	159
210BWTF4121	106
211-58	5804
211-40140-18	130
211A6380-1	130
211A6380-3	152
211A6381-1	175
211A6381-2	152
211A6381-I	175
211A6382-2	152
211AESU3055	130
211ATPE3391	159
211AVPF3415	123AP
211AVTE4275	123AP
211Z4	141A
212-00102	500A
212-00104	500A
212-00128	521
212-012	500A
212-013	500A
212-7	116
212-18	116
212-21	116
212-22	116
212-23	116
212-25	116
212-27	116
212-33	116
212-35	116
212-36	116
212-37	116
212-38	116
212-39	116
212-40	116
212-41	116
212-42	116
212-46	120
212-47	116
212-48	118
212-49	116
212-50	116
212-51	116
212-57	116
212-58	116
212-59	116
212-60	116
212-61	116
212-62	116
212-63	120
212-64	116
212-65	116
212-68	508
212-70	116
212-71	116
212-75	116
212-76	116
212-76-02	116
212-80	506
212-85	118
212-85B	118
212-86	818
212-92	116
212-94	116
212-94B	116
212-95	504
212-102	521
212-103	521
212-104	521
212-105	521
212-106	521
212-128	521
212-129	521
212-130	521
212-130X	521
212-131	521
212-132	521
212-133	521
212-134	521
212-135	521
212-136	500A
212-139	521
212-139-01	500A
212-139-02	521
212-139-03	500A
212-140	521
212-140-01	521
212-141	526A
212-141-01	526A
212-141-02	526A
212-141-03	526A
212-141-04	526A
212-142	522
212-142-01	522
212-145	528
212-146	528
212-147	559
212-192	116
212-254	116
212-505	123AP
212-507	123AP
212-695	123AP
212-699	159
212-741-005	5484
212-Z9000	156
212-Z9001	169
212-Z9002	170
212-Z9005	5991
212-Z9006	5900
212Z9522	522
212Z9526A	526A
212Z9535	535
212Z9539	539
213-1	128
215-51	116
215-58	116
215-76(GE)	116
215-76GE	116
215-37567	199
215Z4	145A
216-001-001	152
217(RCA)	161
217-1	108
217-76-02	116
218-22	123AP
218-23	123AP
218-24	123AP
218-25	123AP
218-26	128
218-A-464-PM	5695
218A4164P1M	5695
219-103-2006	712
220	175
220-001001	123AP
220-003001	116
220-002001	131
220-008001	132
220-001002	123AP
220-001011	108
220-001012	108
221(SEARS)	123AP
221-0048	712
221-9-7-01	843
221-30	909
221-31	703
221-32	703
221-34	708
221-39	705A
221-39(ZENITH)	705A
221-40	739
221-42-1	714
221-43	715
221-45	731
221-45-01	731
221-46	713
221-48	712
221-48-01	712
221-62	790
221-64(RECT)	506
221-65	722
221-69	791
221-77	810A
221-79	722
221-79-01	722
221-86	836
221-87	714
221-87-01	982
221-89	736
221-90	723
221-91	801
221-91-01	801
221-96	818
221-96C	818
221-97	843
221-97-01	843
221-97-01F	843
221-98	1231
221-98A05	1231
221-103	849
221-104	700
221-105	701
221-105-01	701
221-106	702
221-107	744
221-108	788
221-121	834
221-129	987
221-129A-01	987
221-132	863
221-140	845
221-141	815
221-158	1231A
221-158-01	1231A
221-158-02	1231A
221-158-03	1231A
221-164	867
221-166	960
221-166-00	960
221-166-02	964
221-166-04	966
221-166-4	966
221-167-01	977
221-167-05	950
221-171	989
221-175	874
221-175-01	874
221-177	1376
221-178	1633
221-179	873
221-179-01	873
221-179-02	873
221-179-03	873
221-179-1	873
221-187	1682
221-187A	1682
221-190	878
221-190-	878
221-190-01	875
221-190-01A	875
221-193	849
221-193A	849
221-198	849
221-202	1294
221-213	960
221-213-00	960
221-213-02	964
221-213-04	966
221-213-4	966
221-230	1576
221-240	778A
221-296-04	966
221-303	1744
221-316	1380
221-347	1788
221-347-01	1788
221-383	1792
221-422-01	1374
221-467	1790
221-475	15023
221-475C	15023
221-476	15007
221-476D	15007
221-503	229
221-516	7015
221-517-01	1852
221-895	123AP
221-4757D04	15023
221-4760	15007
221-4767D02	15007
221-Z9000	704
221-Z9002	709
221-Z9004	711
221-Z9009	730
221-Z9010	738
221-Z9011	743
221-Z9013	749
221-Z9014	780
221-Z9015	789
221-Z9017	909
221-Z9018	912
221-Z9019	923
221-Z9020	923D
221-Z9021	1003
221-Z9022	1004
221-Z9023	1100
221-Z9024	1142
221-Z9025	726
221-Z9026	1006
221-Z9027	801
221-Z9028	746
221-Z9030	754
221-Z9133	4011B
221-Z9162	1263
221_158	1231A
221G3114	903
221G3114-1	903
222-1	5995
222-2	5995
222-1006	116
223	108
223-1	159
223-18-01	1776
223P1	159
224-1	199
224HACA0723	923D
224N1	199
225A6946-P000	7400
225A6946-P003	7403
225A6946-P004	7404
225A6946-P010	7410
225A6946-P020	7420
225A6946-P050	7450
225A6946-P093	7493A
225A6976-P095	7495
226-1	123AP
226-2	123AP
226-2(DIODE)	506
226-3	129
226-4	128
226N1	123AP
227-3	50
227-2000D1	113A
227-200001	113A
228-1	49
228N5	49
229-0100	158
229-0030	158
229-0050-13	123AP
229-0050-14	123AP
229-0050-15	123AP
229-0080	158
229-0090	160
229-0011	113A
229-0014	109
229-0026	160
229-0027	158
229-0028	158
229-0029	158
229-0035	109
229-0037	109
229-0038	160
229-0041	158
229-0049	109
229-0055	158
229-0056	158
229-0057	109
229-0062	158
229-0077	160
229-0079	160
229-0082	160
229-0083	160
229-0085	158
229-0086	160
229-0087	160
229-0088	158
229-0089	160
229-0091	158
229-0092	158
229-0093	109
229-0095	160
229-0096	614
229-0097	158
229-0098	160
229-0099	160
229-0102	116
229-0105	109
229-0106	160
229-0107	109
229-0108	109
229-0110	160
229-0120	116
229-0130	158
229-0140	158
229-0150	123AP
229-0180-32	161
229-0180-33	161
229-0180-34	108
229-0180-119	161
229-0180-123	123AP
229-0180-124	108
229-0180-149	108
229-0190-29	108
229-0190-30	161
229-0190-31	107
229-0190-90	123AP
229-0204-4	108
229-0204-6	161
229-0204-6(VHF)	161
229-0204-23	108
229-0210-14	108
229-0210-19	107
229-0220-9	108
229-0220-14	112
229-0220-19	108
229-0240-20	112
229-0240-25	161
229-0250-10	108
229-0250-11	112
229-0260-18	107
229-0-180-33	107
229-0-180-34	107
229-0111	160
229-0112	160
229-0114	112
229-0116	104
229-0117	116
229-0119	116
229-0121	160
229-0122(NPN)	102A
229-0122(PNP)	102A
229-0123	160
229-0124	158
229-0125	158
229-0129	160
229-0131	160
229-0132	160
229-0133	158
229-0135	116
229-0136	160
229-0137	158
229-0138	158
229-0139	158
229-0141	109
229-0142	158
229-0143	158
229-0144	123AP
229-0145	160
229-0146	158
229-0147	116
229-0149	123AP
229-0151	123AP
229-0151-3	108
229-0152	123AP
229-0154	123AP
229-0162	116
229-0182-65	109
229-0185-2	108
229-0185-3	108
229-0191-29	107
229-0191-30	107
229-0192-18	222
229-0192-19	108
229-0192-20	132
229-0214-40	108
229-0248-45	108
229-180-32	161
229-485-2	107
229-1054-5	116
229-1054-9	116
229-1054-82	116
229-1054-85	116
229-1200-29	112
229-1200-36	123AP
229-1301-19	177
229-1301-20	177
229-1301-21	5400
229-1301-22	161
229-1301-23	199
229-1301-24	123AP
229-1301-25	506
229-1301-26	190
229-1301-27	172A
229-1301-28	193
229-1301-29	5097A
229-1301-30	5079A
229-1301-31	5097A
229-1301-34	196
229-1301-35	152
229-1301-36	153
229-1301-37	192
229-1301-38	193
229-1301-42	747
229-1301-44	738
229-1301-63	165
229-1301-64	130
229-1513-46	128
229-5100-15U	108
229-5100-15V	108
229-5100-31V	161
229-5100-32	161
229-5100-32V	161
229-5100-33V	108
229-5100-164	112
229-5100-224	108
229-5100-225	108
229-5100-226	108
229-5100-227	126
229-5100-228	108
229-5100-231	109
229-5100-232	116
229-5100-233	116
229-5100-234	116
229-5100-235	506
229-6011	128
229D09001	519
229D09005	519
230-0006	109
230-006	109
230-0014	177
230-0023	139A
231-0000-01	102A
231-0000-03	158
231-000-001	102A
231-0001-01	85
231-0002	199
231-0003	121
231-0004	199
231-0004-01	199
231-0004-02	123AP
231-0004-03	199
231-0006-03	121
231-0006B	121
231-0008	175
231-0009	102
231-0020	185
231-0040	181
231-0070	263
231-004-03	199
231-006-03	121
231-006B	121
231-0011	121
231-0013	128

PART NUMBER	NTE REPLACEMENT
231-0014	130
231-0015	121
231-0018	160
231-0021	183
231-0023	188
231-0024	189
231-0025	123AP
231-0026	123AP
231-0027	159
231-0028	123AP
231-0029	159
231-0032	129
231-0033	297
231-0034	298
231-0036	188
231-0037	188
231-0038	194
231-0039	288
231-0041	180
231-0043	159
231-0044	159
231-0045	199
231-0046	241
231-0048	107
231-0051	159
231-0052	181
231-0053	123AP
231-0058	183
231-0059	182
231-0066	271
231-0067	123AP
231-0068	159
231-0073	457
232-0001	116
232-0006	116
232-0006-02	519
232-0007	5897
232-0008	5983
232-0009-31	142A
232-0040	135A
232-0012	5187A
232-0014	5897
232-1	123AP
232-2	123AP
232-1006	156
232-1009	116
232-1011	116
232N1	123AP
232N2	123AP
233(SEARS)	128
233N1D	283
233N2	283
235	100
236-0002	9932
236-0003	9946
236-0005	7400
236-0006	7403
236-0007	7404
236-0008	7405
236-0009	7473
236-0012	9807
236-0015	9601
236-0017	9962
236-0048	2102
236-0082	931
239A7920	196
239A7921-1	197
240PAL50	5380
240PAL60	5380
240PAL80	5381
240PAL100	5381
240PAL110	5381
240PAL120	5381
240PAM10	5380
240PAM20	5380
240PAM30	5380
240PAM40	5380
240PAM50	5380
240PAM60	5380
240PAM80	5381
240PAM100	5381
241-15A	160
241ABNG4148	519
241B	128
242-997	6401
246P1	106
247-016-013	108
247-1	112
247-255	116
247-256	103A
247-257	123AP
247-621	116
247-623	102A
247-624	121
247-625	128
247-626	128
247-629	123AP
247AS-C0450-001	923
247AS-C1249-001	123AP
248-38104-1	128
249-1L	229
249-519	5010A
249-569	5011T1
249-629	5013T1
249-759	5015A
249N1	229
250-0700	199
250-0380	229
250-0359	152
250-0373	199
250-0711	199
250-0712	123AP
250-1	171
250-3	171
250-1213	289
250-1312	199
250JB05L	5322
250JB1L	5322
250JB2L	5322
250JB4L	5324
250JB6L	5326
250JB8L	5327
250JB10L	5328
250N3	171
250NR14D	2V150
250PA60	5380
250PA80	5381
250PA100	5381
250PA120	5381
250PAL10	5380
250PAL20	5380
250PAL30	5380
250PAL40	5380
250PAL50	5380
250PAL60	5380
250PAM10	5380
250PAM20	5380
250PAM30	5380
250PAM40	5380
250PAM50	5380
250PAM60	5380
250R1B	5801
250R2B	5802
250R3B	5803
250R4B	5804
250R5B	5805
250R6B	5806
250R7B	5808
250R8B	5808
250R9B	5809
250R10B	5809
250RA10	5587
250RA20	5587
250RA30	5587
250RA40	5587
250RA60	5587
250RA80	5589
250RA100	5589
250RA120	5589
250RA1200	5589
251-2	519
251M1	103
251RA10	5587
251RA20	5587
251RA30	5587
251RA40	5587
251RA60	5587
252-2	177
252-113002-001	911
253-5	5079A
254-11	5021A
254-36	5027A
254GI	116
257-1	5031A
258-1	188
258-2	189
260-2	552
260-10-006	132
260-10-010	195A
260-10-020	123AP
260-10-040	229
260-10-011	177
260-10-016	159
260-10-021	289
260-10-023	199
260-10-024	152
260-10-025	109
260-10-026	229
260-10-027	290
260-10-031	614
260-10-032	177
260-10-033	116
260-10-035	1102
260-10-036	1100
260-10-039	290
260-10-041	297
260-10-042	199
260-10-043	236
260-10-044	5072A
260-10-046	137A
260-10-047	177
260-10-048	109
260-10-049	177
260-10-051	229
260-10-052	154
260-10-053	236
260-10-054	152
260-10-055	236
260-10-056	316
260-10-057	519
260-10-20	123AP
260-10-46	137A
260-61-011	177
260-61-047	177
260-61-067	177
260C33801	289A
260D09001	123AP
260D00401	102A
260D00402	102A
260D00403	102A
260D00404	102A
260D00507	109
260D08013	107
260D08201	123AP
260D07201	154
260D09301	130
260D0404	126
260D04501	126
260D02501	102A
260D02601	102A
260D08601	128
260D05701	108
260D04701	158
260D02701	158
260D08701	128
260D05704	107
260D05707	108
260D05709	123AP
260D08801	123AP
260D07901	128
260D07412	123AP
260D08214	210
260D08514	102A
260D08912	158
260D09314	123AP
260D09413	102A
260D09612	128
260D106A1	123AP
260D7201	154
260D13701	199
260D13702	123AP
260D13704	102A
260D15901	199
260D15902	289
260P03001	158
260P04001	123AP
260P08001	108
260P07001	123AP
260P07002	123AP
260P04002	123AP
260P04003	123AP
260P07004	108
260P04004	123AP
260P08201	159
260P09201	161
260P03201	161
260P03201A	161
260P01209	121
260P07301	123AP
260P08401	108
260P05402	107
260P09402	124
260P05402A	107
260P09501	164
260P04502	123AP
260P07502	131
260P04503	123AP
260P04505	123AP
260P09508	164
260P08601	175
260P07601	158
260P09701	165
260P07701	123AP
260P07702	123AP
260P07703	123AP
260P07704	123AP
260P07705	123AP
260P07707	123AP
260P0770	123AP
260P05801	108
260P08801	123AP
260P08801A	123AP
260P05901	161
260P07901	108
260P08901	165
260P06901	108
260P05901A	161
260P09902	123AP
260P06902	108
260P06903	108
260P02903	123AP
260P02903A	123AP
260P029033	123AP
260P06904	123AP
260P02908	123AP
260P08908	165
260P1003	128
260P1030	154
260P1060	108
260P1300	126
260P1601	161
260P1610	161
260P1760	107
260P2100	102A
260P4002	123AP
260P10003	128
260P10003A	128
260P10005	128
260P10301	154
260P10403	108
260P10501	108
260P10502	108
260P10601	161
260P10602	108
260P10707	85
260P10801	154
260P11101	108
260P11101A	108
260P11102	233
260P11209	165
260P11302	123AP
260P11303	123AP
260P11304	123AP
260P11305	123AP
260P11403	159
260P11502	123AP
260P11503	123AP
260P11504	123AP
260P11505	123AP
260P12001	123AP
260P12002	123AP
260P12401	128
260P12481	128
260P12701	152
260P13001	126
260P13701	123AP
260P13702	123AP
260P13704	129
260P14101	85
260P14101(1)	85
260P14102	123AP
260P14103	123AP
260P14104	128
260P14105	123AP
260P14202	196
260P14202(1)	196
260P14407	375
260P15100	124
260P15108	124
260P15201	159
260P15202	159
260P15203	159
260P16009	175
260P16101	161
260P16202	124
260P16208	124
260P16301	108
260P16302	108
260P16304	128
260P16502	159
260P16503	290A
260P16504	159
260P16603	290
260P16802	294
260P17002	128
260P17101	123AP
260P17102	85
260P17102(1)	85
260P17103	123AP
260P17104	123AP
260P17105	85
260P17106	123AP
260P17201	108
260P17501	199
260P17502	199
260P17503	123AP
260P17601	229
260P17601(1)	107
260P17602	108
260P17603	107
260P17605(1)	107
260P17701	85
260P17702	85
260P17704	199
260P17706	85
260P19009	165
260P19101	123AP
260P19103	123AP
260P19108	164
260P19208	165
260P19501	123AP
260P19503	199
260P19909	162
260P20101	175
260P21001	100
260P21002	100
260P21102	186
260P21106	210
260P21208	124
260P21308	186
260P21608	165
260P21901	162
260P21908	162
260P22001	132
260P22002	132
260P22003	312
260P22004	312
260P22101	154
260P22203	171
260P22204	191
260P22801	186A
260P24008	130
260P24108	165
260P24308	164
260P24408	163A
260P24803	175
260P24901	161
260P25504	290A
260P25601	290A
260P26201	288
260P26301	187
260P27901	379
260P28107	289
260P28401	152
260P28701	186
260P30008	165
260P30701	399
260P31303	289A
260P31402	192
260P33108	165
260P33408	164
260P33802	289A
260P33803	289A
260P33804	289A
260P33805	289A
260P33806	289A
260P34008	292
260P34202	196
260P34602	198
260P35101	376
260P35301	287
260P35401	198
260P35601	107
260P35908	165
260P36001	290A
260P36003	290A
260P36501	229
260P37108	291
260P37504	234
260P38001	287
260P38501	399
260P38701	382
260P39008	165
260P41604	289A
260P41605	289A
260P41802	373
260P41904	289A
260P41905	289A
260P42002	375
260P42201	399
260P42502	157
260P42504	157
260P42706	196
260P42802	375
260P42807	375
260P43201	89
260P43501	89
260P44701	2302
260P52301	399
260P60401	2357
260P60601	2302
260P70403	108
260P70501	108
260P70502	108
260P141103	123AP
260P166040	290A
260P254010	2362
260P255040	290A
260P256010	290A
260P256030	290A
260P325030	293
260P338040	289A
260P338050	289A
260P356010	107
260P360030	290A
260P366001	290A
260P385010	399
260P387010	382
260P387030	382
260P416020	289A
260P416030	289A
260P416040	289A
260P419030	289A
260P419040	289A
260P422010	399
260P428020	375
260P428070	375
260P469010	288
260P559010	85
260P559030	85
260P559050	85
260P560040	290A
260P560050	290A
260P571010	157
260P573020	398
260P574020	375
260P603010	2358
260P604010	2357
260P606010	2331
260P607010	2331
260P608010	2331
260P632010	2357
260P654020	85
260P2356010	107
260Z00401	192
260Z00402	123AP
260Z00703	158
260Z00309	108
260Z00209	108
260Z00109	108
260Z01201	158
261RAX	192
262-1	506
263P05209	4052B
263P06602	4066B
263P17402	40174B
264-701508	125
264D00801	110MP
264D00901	109
264D00701	109
264D00101	177
264D01001	109
264D00503	614
264D00505	116
264D00507	5070A
264D00209	177
264D00612	109
264D0701	110MP
264D01112	116
264P05001	116
264P02001	116
264P03001	116
264P09001	125
264P00401	109
264P00501	113A
264P01001	615P
264P00601	116
264P00801	109
264P08002	116
264P05002	116
264P00602	125
264P00502	113A
264P04003	145A
264P04005	136A
264P00506	113A
264P0080	109
264P01011	116
264P01012	116
264P09101	506
264P02104	118
264P04108	174
264P04109	174
264P04206	504
264P09301	142A
264P06301	102A
264P04301	116
264P01301	109
264P02301	506
264P03301	5070A
264P03302	5074A
264P04303	125
264P03303	142A
264P01305	109
264P01305(1)	109
264P01306	109
264P01350	109
264P03401	112
264P04402	116
264P02402	116
264P05404	519
264P04501	519
264P09501	506
264P02501	135A
264P04502	519
264P02502	5016A
264P04502(1)	519
264P02503	5018A
264P04504	519
264P045040	519
264P04506	519
264P04507	519
264P04508	519
264P06601	116
264P03601	506
264P06603	506
264P03603	506
264P03604	558
264P03605	506
264P06606	116
264P03606	506
264P03607	116
264P04701	506
264P03701	116
264P01701	506
264P04702	116
264P09703	140A
264P04703	116
264P03703	156
264P04705	506
264P09707	5067A
264P08801	116
264P04801	116
264P09801	116
264P03802	109
264P04901	116
264P05902	614
264P08902	503
264P4501(1)	519
264P10102	558
264P10103	116
264P10105	116
264P10106	125
264P10201	552
264P10202	552
264P10210	558
264P10308	145A
264P10403	5010A
264P10502	5074A
264P10502(ZENER)	5074A
264P10906	5075A
264P11003	5071A
264P11004	142A
264P11007	5085A
264P11009	147A
264P12303	112
264P13002	506
264P14002	503
264P14409(1)	5077A
264P14601	558
264P14701	125
264P15501	140A
264P17401	5071A
264P17402	143A
264P17801	612
264P18801	156
264P19303	5010A
264P19304	5004A
264P19305	5004A
264P19306	5021A
264P19307	5027A
264P19308	5018A
264P20001	5313
264P20006	5312
264P22001	5014A
264P22005	5019A
264P22006	5019A
264P22007	5025A
264P22008	5007A
264P22103	5021A
264P22104	5031A
264P22105	5012A
264P22202	5023A
264P22205	5019A
264P22206	5035A
264P22208	5019A
264P23101	552
264P24401	615
264P28501	116
264P29004	5021A
264P29101	5031A
264P29102	5012A
264P29104	5014A
264P29205	5012A
264P29206	5006A
264P29209	5006A
264P33004	144A
264P33009	144A
264P34109	5009A
264P34702	3074
264P39802	5304
264P46004	5009A
264P46106	5012A
264P46302	5016A
264P46402	5019A
264P46502	5021A
264P47003	5035A
264P62020	5015A
264P102020	558
264P140601	525
264P157010	525
264P157040	558
264P231010	552
264P244010	615
264P244020	615P
264P285010	116
264P295020	552
264P295030	558
264P341020	5019T1
264P341090	5009A
264P358040	506
264P358070	580
264P389010	112
264P412030	5309
264P460040	5009A
264P460050	5009A
264P460060	5010A
264P460090	5010A
264P462020	5014A
264P462080	5016A
264P463010	5015A
264P463020	5016A
264P463060	5018A
264P463090	5018A
264P464060	5020A
264P465010	5021A
264P467090	5030A
264P469050	5033A
264P471010	5036A
264P484020	136A
264P485060	138A
264P486020	5027A
264P487070	142A
264P487090	142A
264P488020	5022A
264P501050	5004A
264P508010	5332
264P512010	5311
264P512020	5311
264P512030	5309
264P521030	552
264P522010	552
264P543010	116
264P544010	5304
264P544090	5304
264P550010	3010
264P825010	552
264P846020	5072A
264Z00201	116
264Z00701	109
264Z00103	614
265D00702	177
265P03301	601
265Z00101	177
266-1	177
266-1F	177
266P00101	704
266P00801	1096
266P00301	1096
266P00101(IC)	704
266P00101(TRANS)	123AP
266P01002	1096
266P00602	1099
266P00102	704
266P001-01	704
266P001-02	704
266P30409(1)	1003
266P2304	977
266P10101	749
266P10103	749
266P10201	747
266P10202	747
266P10601	1430
266P11301	1545
266P11601	1413
266P12101	15001
266P15401	943M
266P19201	1658
266P20402	1298
266P23020	1902
266P28101	1744
266P30102	712
266P30103	712
266P30109	712
266P30201	1075A
266P30601	1029
266P30706	1103
266P32301	712
266P32501	1192
266P32801	788
266P35301	246
266P35801	1219
266P38802	15029
266P40201	245
266P57001	1738
266P60502	738
266P62103	941M
266P63001	1547
266P93402	966

PART NUMBER	NTE REPLACEMENT
266P335001	1217
266P922020	960
266P923020	1902
266P931010	1902
266P934020	966
266P934040	966
267P90205	1546
267P91002	15032
267P91003	1776
268P033010	3098
269M01201	177
269P19009	162
269V004-H01	113A
270-950-030	123AP
270-950-037-02	128
272P01401	1801
272P14001	1798
272P15901	1684
272P140010	1798
272P238010	1863
272P238020	1863
272P239030	1855
273 14	263
276-007	941
276-009	923
276-010	941
276-038	778A
276-053	3057
276-561	137A
276-572	138A
276-1020	5465
276-1089	5461
276-1090	5462
276-1104	116
276-1114	125
276-1122	109
276-1141	5800
276-1142	5801
276-1143	5802
276-1144	5804
276-1152	166
276-1723	955M
276-1729	721
276-1740	923
276-1801	7400
276-1803	7473
276-1808	7490
276-1811	7402
276-1813	7476
276-1818	7474
276-1822	7408
276-1828	74145
276-2008	287
276-2008/RS2008	287
276-2009	123AP
276-2009/RS2009	123AP
276-2011	108
276-2011/RS2011	108
276-2012	287
276-2012/RS2012	287
276-2014	123AP
276-2014/RS2014	123AP
276-2015	108
276-2015/RS2015	108
276-2017	152
276-2017/RS2017	152
276-2018	210
276-2018/RS2018	210
276-2021	106
276-2021/RS2021	106
276-2025	153
276-2025/RS2025	153
276-2026	211
276-2026/RS2026	211
276-2028	133
276-2029	6409
276-2030	123AP
276-2030/RS2030	123AP
276-2033	123AP
276-2033/RS2033	123AP
276-2035	133
276-2036	312
276-2041	130
276-2041/RS2041	130
276-2042	245
276-2042/RS2042	245
276-2043	219
276-2043/RS2043	219
276-2417	4017B
276A01	704
277-14	398
278-14	375
279-14ITT	5019A
279-22(ZENITH)	143A
280-0001	1100
280-0002	801
280-07	5547
281	123AP
284HC	123AP
288(SEARS)	116
290-1003	177
290P41905	289A
290V02H69	108
290V034C01	125
291-04	116
291-20	116
292-10	116
294	159
294-42-9	109
294-92-2	123AP
295-01	177
295-02(ZENITH)	177
295-03	552
295-1	177

PART NUMBER	NTE REPLACEMENT
295L001H01	116
295L001M01	116
295L001M02	116
295L002H01	116
295L002M03	117
295L003M01	116
295V002H01	116
295V003M01	118
295V005H02	116
295V005H03	109
295V006H01	116
295V006H02	116
295V006H03	116
295V006H05	116
295V006H06	117
295V006H07	116
295V006H08	117
295V006H09	116
295V007H02	116
295V008H01	116
295V020B01	116
295V020H01	116
295V012H01	116
295V012H02	116
295V012H03	116
295V012H06	116
295V014H01	116
295V014H04	116
295V014H7	116
295V015H02	116
295V016H01	116
295V017H01	116
295V023H01	116
295V027C01	116
295V027C01-1	116
295V028C01	116
295V028C02	116
295V028C03	116
295V028C04	125
295V029C01	116
295V029C02	116
295V031B02	120
295V031C02	120
295V033B01	118
295V035C01	116
295V041H04	121
295V003H01	118
296	172A
296(REGENCY)	152
296(SEARS)	172A
296-18-9	102A
296-19-9	102A
296-42-9	177
296-46-9	160
296-50-9	123AP
296-51-9	123AP
296-55-9	199
296-56-9	123AP
296-58-9	128
296-59-9	123AP
296-60-9	102A
296-61-9	131
296-62-9	102A
296-64-9-1	158
296-77-9	123AP
296-81-9	128
296-86	229
296-98-9	199
296L002B01	519
296L003B01	142A
296V002H01	109
296V002H02	109
296V002H05	109
296V002H06	109
296V002H07	109
296V002H08	109
296V002M01	109
296V004H01	113A
296V006H02	109
296V006H03	116
296V006H07	116
296V007H02	109
296V020B01	177
296V020B02	116
296V011H03	143A
296V012H01	109
296V015B01	109
296V015H01	109
296V017H01	142A
296V018B01	142A
296V018B02	138A
296V019B01	142A
296V019B04	141A
296V024B01	109
296V024B02	177
297C011H01	160
297L001H01	103A
297L001H02	103A
297L001H03	102A
297L001M01	103A
297L001M02	102A
297L001M03	102A
297L002H01	102A
297L005H01	102A
297L006H01	123AP
297L006H02	123AP
297L007C	199
297L007C02	123AP
297L007C03	199
297L007H01	123AP
297L007H02	123AP
297L007H03	123A
297L007H03/C03	123AP
297L008C02	128

PART NUMBER	NTE REPLACEMENT
297L008H01	128
297L010C	234
297L010C01	234
297L011C01	107
297L012C01	159
297L012C-01	106
297L013B01	123AP
297L013B02	159
297L015C01	199
297V002H03	103A
297V002H04	103A
297V002H05	103A
297V002M04	103A
297V002M05	103A
297V003	102
297V003H02	102A
297V003H03	102
297V003H06	102A
297V003H08	102A
297V003H09	102A
297V003M01	102
297V003M07	102
297V004H010	102
297V004H01	102A
297V004H03	102A
297V004H04	102A
297V004H06	102A
297V004H08	102A
297V004H09	102A
297V004H10	102
297V004H11	102A
297V004H14	102
297V004H15	102
297V004H16	102
297V004M01	102
297V005H01	102A
297V008H01	100
297V008M01	160
297V010H01	102A
297V010M01	102A
297V020H01	160
297V020H02	100
297V020M01	100
297V040H01	102
297V040H08	102
297V040H09	158
297V040H10	102
297V040H11	102
297V040H12	102
297V040H13	102
297V040H15	121
297V040H16	102
297V050C02	102A
297V050H01	120
297V050H02	120
297V050H03	102
297V060H01	124
297V060H02	124
297V060H03	124
297V070C01	126
297V070H49	108
297V080C01	129
297V011	100
297V011H01	126
297V011H02	100
297V012	100
297V012H01	126
297V012H02	100
297V012H03	100
297V012H04	160
297V012H05	100
297V012H06	100
297V012H07	160
297V012H08	100
297V012H09	100
297V012H10	126
297V012H11	160
297V012H12	160
297V012H13	160
297V012H14	102
297V012H15	126
297V017H01	100
297V017H02	100
297V018H01	102A
297V019B01	100
297V019B04	141A
297V019H01	100
297V021H01	100
297V021H02	100
297V021H03	100
297V022H01	100
297V024H01	160
297V024H03	160
297V025H02	102
297V025H03	102A
297V025H04	102
297V025H05	102
297V025H15	102
297V026H01	126
297V026H03	100
297V027C01	116
297V027H01	102
297V032H01	102
297V033H01	102
297V034H01	126
297V035H01	126
297V036H01	126
297V036H02	126
297V037B02	102A
297V037H01	102
297V037H02	102
297V038H01	100
297V038H02	160
297V038H03	160

PART NUMBER	NTE REPLACEMENT
297V038H04	160
297V038H05	100
297V038H06	126
297V038H07	102
297V038H09	100
297V038H10	126
297V038H11	126
297V038H12	126
297V041H01	121MP
297V041H02	121
297V041H03	121
297V041H04	121
297V041H05	104
297V041H06	121
297V041H07	104
297V041H15	104
297V042C01	102
297V042C02	102
297V042C03	102
297V042C04	102
297V042H01	102
297V042H02	102
297V042H03	126
297V042H04	126
297V043H01	102
297V043H02	100
297V044H01	100
297V045H01	126
297V045H02	126
297V049H01	123
297V049H03	123
297V049H04	123
297V049H05	123AP
297V049H06	128
297V051C03	102
297V051C04	102
297V051H01	102
297V051H02	102
297V051H03	102
297V051H04	102A
297V052C01	102
297V052H01	102A
297V052H02	102
297V052H04	102A
297V053C01	102
297V053H01	102A
297V053H02	102A
297V054C01	100
297V054C02	100
297V054H01	126
297V054H02	126
297V055C01	100
297V055H01	126
297V057H01	158
297V057H02	158
297V059H01	123
297V059H02	123
297V059H03	123
297V061C01	130
297V061C01A	130
297V061C02	130
297V061C02A	130
297V061C03	123
297V061C04	123
297V061C05	128
297V061C06	123
297V061H01	123AP
297V061H02	123AP
297V061H03	123AP
297V062C01	121
297V062C05	121
297V062C06	128
297V063C01	126
297V063H01	160
297V064B01	160
297V064H01	160
297V065C01	126
297V065C02	126
297V065C03	126
297V065H01	100
297V065H02	100
297V065H03	100
297V071C03	124
297V071H03	124
297V072C01	108
297V072C03	108
297V072C04	108
297V072C05	128
297V072C06	123AP
297V073C01	129
297V073C02	129
297V073C03	159
297V073C04	159
297V074C01	161
297V074C02	123
297V074C03	123
297V074C04	123
297V074C06	123AP
297V074C07	123AP
297V074C08	123AP
297V074C09	108
297V074C10	128
297V074C11	129
297V074C12	128
297V076B01	102
297V076C01	102
297V077C01	126
297V078C01	108
297V078C02	108
297V081C01	102A
297V082B01	128
297V082B02	129
297V082B03	129
297V083C01	159

PART NUMBER	NTE REPLACEMENT
297V083C02	123AP
297V083C03	129
297V083C04	128
297V084C01	157
297V085C01	123AP
297V085C02	123AP
297V085C03	123AP
297V085C04	123AP
297V086C01	159
297V086C02	123AP
297V086C03	123AP
297V086C04	185
297V087B02	188
299(POWER)	105
299B09001	519
299D09001	519
299D09002	5010A
299D09005	519
299D13101	5160A
299POWER	105
300	102
300-0003-002	177
300-0003-003	177
300C043	128
300E	6058
300R1B	5801
300R2B	5802
300R3B	5803
300R5B	5805
300R7B	5808
300R8B	5808
300RA3	5587
300RA10	5587
300RA20	5587
300RA30	5587
300RA40	5587
300RA60	5587
300RA80	5589
300RA100	5589
300RA120	5589
300RB10	5377
300RB20	5377
300RB30	5377
300RB40	5377
300RB60	5377
300RB80	5378
300RB100	5378
300RB120	5378
300RB880	5589
300TB20	5587
300U5A	6354
300U5AR	6355
300U10A	6354
300U10AR	6355
300U15A	6354
300U15AR	6355
300U20A	6354
300U20AR	6355
300U25A	6354
300U25AR	6355
300U30A	6354
300U30AR	6355
300U40A	6354
300U40AR	6355
300U50A	6356
300U50AR	6357
300U60A	6356
300U60AR	6357
300U70A	6358
300U70AR	6359
300U80A	6358
300U80AR	6359
300U90A	6358
300U90AR	6359
300U100A	6358
300U100AR	6359
301	102
301-1	120
301-576-1	7400
301-576-2	9158
301-576-3	708
301-576-4	7400
301-576-5	9946
301-576-6	7495
301-576-7	7473
301-576-10	7490
301-576-11	74196
301-576-12	74S00
301-576-13	74S113
301-576-14	740A
301-576-15	712
301-576-17	74C04
301-576-19	9158
301-576-21	74C02
301-576-22	74S02
301-576-23	7432
301RA10	5587
301RA20	5587
301RA30	5587
301RA40	5587
301RA60	5587
302	102
302-1(RCA)	123AP
302-2	5011A
302-679-1	299
302-680	299
302A	5980
302B	5982
302C	5986
302D	5986
302E	5988
302F	5988
302G	5990
302H	5990

PART NUMBER	NTE REPLACEMENT
302K	5992
302M	5994
302P	5998
302S	5998
302V	6002
302Z	6002
303(RCA)	159
303-1	1416
303-1(IC)	1416
303-1(RADIO SHACK)	159
303-1(RCA)	159
303-2	129
303-2(RCA)	159
303A	5980
303B	5982
303C	5986
303D	5986
303E	5988
303F	5988
303G	5990
303H	5990
303K	5992
303M	5994
303P	5998
303S	5998
303V	6002
303Z	6002
304A	5870
304B	5872
304C	5874
304D	5874
304F	5876
304H	5878
304K	5880
304M	5882
304P	5886
304RA60	5587
304RA80	5589
304RA100	5589
304RA120	5589
304S	5886
304V	5890
304Z	5890
305-009001	6402
305-003001	179
305-009002	6402
305-005002	132
305-003003	85
305-004005	152
305-003006	85
305-004007	152
305-003007	324
305-004008	291
305-002009	285
305-03001	123AP
305-01001	290A
305-003010	199
305-004010	284
305-001010	281
305-001011	374
305-003011	289A
305-002011	219
305-001012	290A
305-002012	153
305-002013	197
305-004013	130
305-004014	236
305-001015	290A
305-003017	123AP
305-001020	292
305-001021	292
305-003022	284
305-001024	187A
305-003024	199
305-003025	85
305-003026	195A
305-003030	161
305-003034	295
305-01004	187A
305-003042	199
305-001043	232
305-003043	199
305-003044	186A
305-003045	280
305-003046	373
305-003048	375
305-003049	192A
305-05005	132
305-003050	85
305-003051	85
305-003052	289A
305-003053	152
305-003054	199
305-003055	291
305-003057	291
305-003058	85
305-01006	290A
305-003060	199
305-003062	199
305-003064	85
305-01008	290A
305-01009	219
305-00210	292
305-04011	130
305-03012	85
305-01013	153
305-01014	290
305-03014	85
305-03023	199
305-01026	43
305-03027	186A
305-01034	298
305-03061	199
305-03073	199

PART NUMBER	NTE REPLACEMENT
305-03079	289A
305-03081	152
305-1	1231A
305A	5830
305B	5832
305C	5834
305D	5834
305F	5836
305GI418C	525
305H	5838
305K	5840
305M	5842
305P	5846
305S	5846
305V	5848
305Z	5848
306-05001	612
306-001025	3014
306-1	123AP
306-1(RCA)	123AP
306-2(RCA)	123AP
306-3(RCA)	123AP
306-4(RCA)	123AP
306-5(RCA)	123AP
306-6(RCA)	123AP
306-7(RCA)	123AP
306-8(RCA)	123AP
306-9(RCA)	123AP
306-11(RCA)	123AP
306-13(RCA)	123AP
306-R(RCA)	123AP
307-001-9-001	703
307-005-9-001	1003
307-007-9-002	1102
307-007-9-001	1100
307-009-9-002	1102
307-020-9-001	1100
307-029-1-001	1100
307-095-9-003	977
307-107-9-003	1155
307-112-9-007	1082
307-112-9-002	911
307-113-9-003	977
307-113-9-001	4011B
307-115-9-001	1082
307-131-9-006	1226
307-131-9001	1203
307-133-9-004	1192
307-143-9-002	1249
307-143-9-001	1262
307-143-9-003	1278
307-152-9-012	4011B
307-152-9-007	74LS00
307-152-9-009	74LS93
307A	116
307B	116
307C	116
307D	116
307F	116
307H	116
307K	116
307M	116
308TC	938M
309(CATALINA)	159
309-01 (ZENITH)	5019A
309-01ITT	5019A
309-2(RCA)	123AP
309-3(RCA)	123AP
309-4(RCA)	123AP
309-324-613	118
309-324-616	109
309-327-601	138A
309-327-608	138A
309-327-802	138A
309-327-803	125
309-327-910	116
309-327-916	109
309-327-926	123AP
309-327-927	116
309-327-931	102A
309-327-932	116
310	116
310-068	126
310-4	116
310-68	126
310-123	126
310-124	126
310-139	126
310-187	123
310-188	102
310-189	100
310-190	126
310-191	126
310-192	121
310-8028-001	5527
311-0126-001	519
311-0139-001	177
311D589-P2	159
311D883-P01	177
311D916P01	199
311Z4	141A
313-0001	923D
313-0004	941M
313-0015	967
313-0023	960
313-0037	857M
313-0038	858M
313-0039	859
314-0100	74LS273
314-0001	955M
314-0040	74LS125A
314-0070	74LS86
314-0015	7404
314-0018	74LS00

PART NUMBER	NTE REPLACEMENT
314-0019	74LS04
314-0046	74S04
314-0058	74LS08
314-0059	74LS10
314-0072	74LS174
314-0073	74LS175
314-0076	74LS157
314-0078	74LS02
314-0083	74LS240
314-0086	74LS163A
314-0101	74LS283
314-0104	74LS138
314-0123	74LS257
314-0125	74LS38
314-6005-1	184
314-6006	175
314-6007-1	123AP
314-6007-2	123AP
314-6007-3	123AP
314-6010-3	123AP
315	116
315-0006	4017B
315-0007	4011B
315-0031	3880
315-0039	4015B
315-0043	4069
315-0046	2114
315-0079	4053B
316-0227-001	910
316-1	229
316-1(RCA TUNER)	229
316-1(RCA)	188
317-0083-001	159
317-0139-001	129
317-1(RCA)	189
317-2627-1	9946
317-8504-001	123AP
318-1(RCA)	194
318-2	297
318-2(RCA)	194
318-7(RCA)	123AP
319-006005	4001B
319-006008	4066B
319-011001	4069
319-025006	955M
319-003010	4013B
319-003011	4022B
319-006011	4007
319-006012	4001B
319-006013	4052B
319-006014	4011B
319-006015	4070B
319-006017	4011B
319-006018	4066B
319-006019	4070B
319-023013	778A
319-023021	996
319C	123AP
320-1(RCA)	130
320A	116
320B	116
320C	116
320D	116
320F	116
320H	116
320K	116
320M	116
320P	125
320S	125
320Z	125
321-003007	3014
321-003008	3012
321-1(RCA)	194
321-264	154
322(CATALINA)	123AP
322-0147	116
322-1	175
322-1(RCA)	175
322T1	102A
323-5900	5019T1
323-6824	5021T1
323T1	102A
324	102A
324-0100	102A
324-0030	158
324-0080	158
324-0090	100
324-0011	113A
324-0014	109
324-0015	120
324-0016	160
324-0026	160
324-0027	126
324-0028	126
324-0029	102A
324-0035	109
324-0037	109
324-0038	126
324-0041	102
324-0049	109
324-0055	102
324-0056	158
324-0057	109
324-0062	158
324-0074	102A
324-0077	160
324-0079	126
324-0082	160
324-0083	160
324-0085	158
324-0086	160
324-0087	160
324-0088	102
324-0089	102A
324-0091	102A
324-0092	102A
324-0093	102A
324-0093(PHILCO)	109
324-0095	160
324-0097	158
324-0098	126
324-0099	126
324-0102	117
324-0105	109
324-0106	126
324-0107	110MP
324-0107-01	109
324-0108	109
324-0110	160
324-0120	116
324-0130	126
324-0140	102
324-0150	108
324-0160	109
324-012	160
324-019	128
324-0111	160
324-0112	160
324-0113	112
324-0114	112
324-0115	179
324-0116	127
324-0117	116
324-0118	5896
324-0119	116
324-0121	126
324-0122	103A
324-0123	160
324-0124	158
324-0125	158
324-0126	131
324-0128	127
324-0129	126
324-0131	160
324-0132	160
324-0133	102
324-0134	103
324-0135	116
324-0136	126
324-0137	126
324-0138	126
324-0139	102
324-0141	109
324-0142	102
324-0143	102
324-0144	102
324-0145	126
324-0146	102
324-0147	116
324-0149	108
324-0151	123
324-0152	123
324-0154	123
324-0155	160
324-0162	116
324-0187	160
324-1	108
324-132	160
324-144	102
324-6005-5	123AP
324-6011	128
324-6011(NPN)	128
324-6011(PNP)	102
324-6013	128
324T1	102A
324T2	102A
325-0500-12	199
325-0500-13	199
325-0030-315	102A
325-0030-317	102A
325-0030-318	102A
325-0030-319	102A
325-0025-327	109
325-0025-329	102A
325-0025-330	102A
325-0025-331	102A
325-0028-79	102A
325-0028-80	102A
325-0028-81	102A
325-0028-82	126
325-0028-83	102A
325-0028-84	108
325-0028-85	160
325-0028-86	109
325-0028-87	109
325-0028-89	116
325-0031-303	123AP
325-0031-304	123
325-0031-305	123
325-0031-306	158
325-0031-310	123AP
325-0031-335	109
325-0031-338	116
325-0036-536	102A
325-0036-562	109
325-0036-564	126
325-0036-565	126
325-0042-311	166
325-0042-351	123AP
325-0047-516	102A
325-0047-517	116
325-0054-310	102A
325-0054-311	102A
325-0054-312	116
325-0076-306	123AP
325-0076-307	123AP
325-0076-308	123AP
325-0076-315	116
325-0081-100	123AP
325-0081-101	123AP
325-0081-102	158
325-0081-109	167
325-0081-110	116
325-0670	102A
325-0670-1	102A
325-0670-7	102A
325-0670-16	116
325-0670A	102A
325-0135-B	116
325-0141-23	116
325-0574-30	123AP
325-0574-31	123AP
325-0574-32	614
325-1(RCA)	123AP
325-3(RCA)	123AP
325-1370-18	102A
325-1370-19	123AP
325-1370-20	123AP
325-1375-10	126
325-1375-11	126
325-1375-12	126
325-1376-53	102A
325-1376-54	126
325-1376-55	126
325-1376-56	102A
325-1376-57	102A
325-1376-58	102A
325-1376-60	109
325-1378-18	107
325-1378-19	107
325-1378-20	102A
325-1378-21	158
325-1378-22	102A
325-1441-10	116
325-1441-11	116
325-1442-8	102
325-1442-9	124
325-1446-26	123
325-1446-27	123
325-1446-28	123
325-1446-29	116
325-1513-29	123
325-1513-30	123
325-1513-46	128
325-1771-15	123AP
325-1771-16	107
325-4610-100	125
325T1	102A
326-5171	9403
326T1	102A
327-1	1566
327-2(RCA)	123AP
330-1(RCA)	159
330-2(RCA)	159
330-3(RCA)	159
330-4(RCA)	159
330-5(RCA)	159
330-6(RCA)	159
330-9(RCA)	159
330-1304-8	108
330G1	177
330GI	177
331-1	196
331-1(RCA)	196
332-2911	130
332-2912	181
332-4009	177
333-1	106
333-1(RCA)	123AP
334-1(RCA)	123AP
334-377	162
335-1	165
335-1(RCA)	165
335A	5981
335B	5983
335C	5987
335D	5987
335F	5989
335H	5991
335K	5993
335M	5995
335P	5999
335S	5999
335V	6003
335Z	6003
336A	5981
336B	5983
336C	5987
336D	5987
336F	5989
336H	5991
336K	5993
336M	5995
336S	5999
336V	6003
336Z	6003
337A	5871
337B	5873
337C	5875
337D	5875
337F	5877
337H	5879
337K	5881
337M	5883
337P	5887
337S	5887
337V	5891
337Z	5891
338-5(RCA)	128
338-6(RCA)	128
338-7(RCA)	128
339-04	506
339-04(ZENITH)	506
339-1(RCA)	159
339-529-001	109
339-529-002	140A
340-2(RCA)	123AP
341A	5850
341B	5852
341C	5854
341D	5854
341F	5856
341H	5856
341K	5860
341M	5862
341P	5866
341S	5866
341V	5868
341Z	5868
342-1	128
342-1(RCA)	123AP
343-1(RCA)	123AP
343-2(RCA)	123AP
343-3(RCA)	123AP
344-1	128
344-1(RCA)	194
344-2(RCA)	194
344-3(RCA)	194
344-6000-2	123AP
344-6000-3	108
344-6000-3A	108
344-6000-4	123AP
344-6000-5	123AP
344-6000-5A	123AP
344-6001-1	128
344-6001-2	128
344-6002-3	123AP
344-6005-1	123AP
344-6005-2	123AP
344-6005-5	123AP
344-6005-6	177
344-6006-6	109
344-6011-1	128
344-6011-2	128
344-6012-1	129
344-6012-3	129
344-6013-1B	128
344-6013-4	128
344-6014-1B	129
344-6015-7	108
344-6015-7A	108
344-6015-8	107
344-6015-9	107
344-6015-10	108
344-6015-11	108
344-6017-1	159
344-6017-2	123AP
344-6017-3	123AP
344-6017-4	128
344-6017-5	123AP
344-6017-6	108
345-2	128
345-2(RCA)	128
346-1(RCA)	123AP
346-3	123AP
346A	5851
346B	5853
346C	5855
346D	5855
346F	5857
346H	5857
346K	5861
346M	5863
346P	5867
346S	5867
346V	5869
346Z	5869
347-1(RCA)	159
347-3(RCA)	159
349-0002-001	519
349-0002-002	519
349-1	128
349-2	128
349-2(RCA)	123AP
349-113-011	9930
349-113-012	9932
349-113-013	9945
349-113-014	9946
349-113-015	9951
349-113-022	9945
349-113-024	9950
349-212-003	909
350	100
350D7217	85
350RA10	5587
350RA20	5587
350RA30	5587
350RA40	5587
350RA60	5587
350RA80	5589
350RA100	5589
350RA120	5589
351-029-020	941
351-1017-010	703
351-1029-020	941
351-1035	923
351-1035-020	923
351-1041-010	912
351-1042-020	910
351-3031	177
351-7140-010	909
351-7189-010	910
352	102
352-0400-00	123AP
352-0400-010	123AP
352-0400-030	123AP
352-0023-001	9932
352-0092-020	128
352-0206-001	123AP
352-0403-010	154
352-0506-000	123AP
352-0606-011	175
352-0610-030	159
352-0610-040	159
352-0630	107
352-0630-010	107
352-0680-010	123AP
352-0680-020	123AP
352-0809	123AP
352-0950-010	106
352-0950-020	106
352-043-010	128
352-0195-000	123AP
352-0197-000	123AP
352-0197-001	123AP
352-0219-000	159
352-0316-00	123AP
352-0318-00	123AP
352-0318-001	123AP
352-0319-000	123AP
352-0322-010	123AP
352-0349-000	123AP
352-0364-000	128
352-0364-010	128
352-0365-000	123AP
352-0433-00	123AP
352-0477-00	123AP
352-0479-010	128
352-0519-00	123AP
352-0546-00	123AP
352-0549-000	199
352-0551-010	159
352-0551-021	159
352-0569-00	123AP
352-0569-010	123AP
352-0569-020	123AP
352-0579-00	123AP
352-0579-010	123AP
352-0579-020	123AP
352-0581-020	175
352-0581-030	175
352-0581-011	175
352-0581-021	175
352-0581-031	175
352-0583-011	130
352-0596-010	123AP
352-0596-020	123AP
352-0596-030	123AP
352-0629-010	123AP
352-0636-010	159
352-0636-020	159
352-0638	199
352-0653-010	107
352-0653-020	107
352-0658-010	161
352-0658-020	161
352-0658-030	161
352-0658-040	161
352-0658-050	161
352-0661-010	123AP
352-0661-020	123AP
352-0667-010	123AP
352-0675-010	123AP
352-0675-020	123AP
352-0675-030	123AP
352-0675-040	123AP
352-0675-050	123AP
352-0677-010	130
352-0677-020	130
352-0677-030	130
352-0677-040	130
352-0677-011	130
352-0677-021	130
352-0677-031	130
352-0677-041	130
352-0677-051	130
352-0677-40	130
352-0711-021	124
352-0713-030	123AP
352-0754-020	159
352-0766-010	128
352-0773-010	234
352-0773-020	234
352-0773-030	234
352-0778-010	159
352-0783-020	128
352-0816-010	128
352-0848-020	159
352-0959-010	159
352-0959-020	159
352-0959-030	159
352-5	171
352-5(RCA)	188
352-7500-010	123AP
352-7500-450	123AP
352-7500-861	124
352-8000-010	123AP
352-8000-020	123AP
352-8000-030	123AP
352-8000-040	123AP
352-9014-00	128
352-9036-00	123AP
352-9079-00	123AP
352-9094-00	194
352-9103-000	123AP
353	102
353(I.C.)	736
353-5(RCA)	189
353-2575-00	177
353-2655-000	177
353-3024-000	519
353-3083-000	177
353-3273-00	177
353-3289-000	519
353-3338-000	519
353-3339-000	177
353-3627-010	519
353-3627-020	519
353-3663-010	519
353-3687-010	519
353-3687-020	519
353-9001-001	126
353-9001-002	126
353-9001-003	126
353-9002-002	126
353-9008-001	129
353-9012-001	102A
353-9201-001	121MP
353-9203-001	152
353-9301-001	128
353-9301-002	160
353-9301-004	129
353-9304-001	159
353-9304-004	129
353-9306-001	123AP
353-9306-002	123AP
353-9306-003	123AP
353-9306-004	123AP
353-9306-005	123AP
353-9306-006	199
353-9306-007	199
353-9310-001	123AP
353-9312-001	102A
353-9314-001	123AP
353-9315-001	123AP
353-9317-001	129
353-9318-001	199
353-9318-002	199
353-9319-001	123AP
353-9319-002	123AP
353-9502-001	152
354(CHRYSLER)	723
354-3052	102
354-3127-1	123AP
354-9001-001	116
354-9101-002	110MP
354-9101-006	116
354-9102-001	116
354-9110-001	116
354M	5457
354M//LB1E	5457
355D6	161
355D7	222
355D8	161
355D9	123AP
356-2(RCA)	130
358-1(RCA)	152
359-1(RCA)	185
359A	116
359B	116
359C	116
359D	116
359F	116
359H	116
359K	116
359M	116
359P	125
359S	125
359V	125
359Z	125
360-1	128
360-1(RCA)	128
360-2	288
360-3	229
360-3(RCA)	229
360-32	177
361-1	186
361-1(RCA)	191
362-1(RCA)	123AP
362-2(RCA)	171
362-3	171
362-4(RCA)	171
362-5(RCA)	171
362A10	192
363-1(RCA)	159
363A	588
363B	588
363D	588
364-1	106
364-1(RCA)	196
364-1(SYLVANIA)	159
364-2001	109
364-6004	184
364-10048	133
364-B12	5547
364B14	5496
365-1	123AP
365T1	100
366-1	123AP
366-1(RCA)	165
366-1(SYLVANIA)	108
366-2	123AP
366-2(SYLVANIA)	108
366A	5850
366B	5852
366C	5854
366D	5854
366F	5856
366H	5858
366K	5860
366M	5862
366P	5999
366RA	5851
366RB	5853
366RC	5855
366RD	5855
366RF	5857
366RH	5859
366RK	5861
366RM	5863
366RP	5867
366RS	5867
366RV	5869
366RZ	5869
366S	5866
366V	5868
366Z	5868
367(SEARS)	160
367-1(RCA)	395
367A	5870
367B	5872
367C	5874
367D	5874
367F	5876
367H	5878
367K	5880
367M	5882
367P	5886
367RA	5871
367RB	5873
367RC	5875
367RD	5875
367RF	5877
367RH	5879
367RK	5881
367RM	5883
367RP	5887
367RS	5887
367RV	5891
367RZ	5891
367S	5886
367V	5890
367Z	5890
368-1(RCA)	222
368-4(RCA)	222
368A	5892
368B	5894
368C	5896
368D	5896
368F	5898
368H	5900
368K	5902
368M	5904
368P	5908
368RA	5893
368RB	5895
368RC	5897
368RD	5897
368RF	5899
368RH	5901
368RK	5903
368RM	5905
368RP	5909
368RS	5909
368RV	5911
368RZ	5911
368S	5908
368V	5910
368Z	5910
369-1(RCA)	222
369-2	116
369-2(RCA)	222
369-3	116
370-1	165
370-1(RCA)	165
370-2	1580
370-116764	923
370AJ	9370
370AL	9370
370CJ	9370
370CL	9370
371A	5980
371B	5982
371C	5986
371D	5986
371F	5988
371H	5990
371K	5992
371M	5994
371P	5998
371RA	5981
371RB	5983
371RC	5987
371RD	5987
371RF	5989
371RH	5991
371RK	5993
371RM	5995
371RP	5999
371RS	5999
371RV	6003
371RZ	6003
371S	5998
371V	6002
371Z	6002
372-1(RCA)	222
373-1(RCA)	159
373-2(RCA)	159
374-2(RCA)	123AP
374-3(RCA)	123AP
374-4(RCA)	123AP
375-6(RCA)	172A
375-1005	123AP
376-0062	9800
376-0099	7441
376-2(RCA)	221
377-3(RCA)	108
377-6(RCA)	108

PART NUMBER	NTE REPLACEMENT
377-7(RCA)	108
378-44	130
378-44A	130
380-0057-000	124
380-0171-000	129
380-1(RCA)	238
380-2	389
380-1000	519
380-1001	519
380H61	116
380K62	116
380M63	116
381-2(RCA)	128
382-1(RCA)	5400
383NR14D	2V250
384A	116
384B	116
384C	116
384D	116
384F	116
384H	116
384K	125
384M	125
384P	125
384S	125
384V	125
384Z	125
385-1	128
385A	116
385B	116
385C	116
385D	116
385F	116
385H	116
385K	116
385KW	116
385M	116
385P	125
385S	125
385Z	125
386-1	159
386-1(SYLVANIA)	159
386-1AY	116
386-1CY	116
386-1FY	116
386-40	130
386-1102-P1	123AP
386-1102-P2	123AP
386-1102-P3	123AP
386-7118P1	108
386-7178-P001	199
386-7178P1	123AP
386-7181P2	128
386-7182-P001	195A
386-7182P1	195A
386-7183P1	130
386-7183P1A	130
386-7184P1	129
386-7185P1	123AP
386-7188P1	108
386-7243-P001	161
386-7254-P202	129
386-7270-P2	181
386-7316-P1	128
386-7316-P2	128
386AK	116
386AW	116
386AX	116
386AY	116
386BW	116
386BY	116
386CW	116
386CX	116
386CY	116
386DW	116
386DY	116
386FW	116
386FX	116
386FY	116
386K	116
386KX	116
386KY	116
386MW	116
386MY	116
388A	588
388B	588
388D	588
390-1	395
391-1(RCA)	108
392-1	238
392-1(RCA)	108
392-1(SYLVANIA)	128
392-2	238
393-1	193
393-1(SYLVANIA)	129
393N	943M
394-1	1413
394-1571-1	519
394-1592-1	177
394-1602-1	177
394-3003-1	123AP
394-3003-3	123AP
394-3003-7	123AP
394-3003-9	123AP
394-3005-2	128
394-3074-2	102
394-3074-5	102
394-3097-1	102
394-3097-2	102
394-3102-1	101
394-3127-1	128
394-3127-2	128
394-3127-3	128
394-3127-4	130
394-3135	135A
394-3135A	130
394-3137-1	198
394-3141-1	128
394-3145	159
396-7178P1	108
398-1(RCA)	190
398-5(RCA)	152
398-8972-1	7460
398-13222-1	923D
398-13223-1	7400
398-13224-1	7404
398-13225-1	7405
398-13226-1	7401
398-13227	941M
398-13632-1	7404
398B	5801
398Z	156
399-4(RCA)	152
399A	5800
399B	5802
399C	5802
399D	5802
400(QUASAR)	506
400-1362-101	128
400-1362-102	128
400-1362-201	128
400-1371-101	123AP
400-1417-101	519
400-1569-101	199
400-1596	177
400-2023-101	123AP
400-2023-201	123AP
400A	109
400C-11958	116
400D	109
401-041-6507	157
401-1	760
401-1(RCA)	159
402-004-02	519
402-1(RCA)	159
402A	5980
402B	5982
402C	5986
402D	5986
402F	5988
402H	5990
402K	5992
402M	5994
402P	5998
402S	5998
402V	6002
402Z	6002
403-009/07	130
403-1	109
403A	5980
403B	5982
403C	5986
403D	5986
403F	5988
403H	5990
403K	5992
403M	5994
403P	5998
403S	5998
403V	6002
403Z	6002
404-2	107
404-2(SYLVANIA)	123AP
404A	5870
404B	5872
404B(NCR)	129
404C	5874
404D	5874
404F	5876
404H	5878
404K	5880
404M	5882
404P	5886
404S	5886
404V	5890
404Z	5890
405-000-4407	2357
405-000-6104	2359
405-000-6302	2359
405-000-9907	3120
405-001-7401	290A
405-001-7407	290A
405-001-7605	290A
405-004-3109	290A
405-004-3208	290A
405-004-4205	290A
405-004-4502	290A
405-004-4601	290A
405-004-4809	290A
405-004-5004	290A
405-004-5103	290A
405-006-1103	290A
405-006-1202	290A
405-006-1301	290A
405-006-1707	290A
405-006-1806	290A
405-006-6702	290A
405-007-5308	383
405-007-6701	383
405-010-6507	399
405-010-6606	399
405-010-6705	399
405-020-5200	85
405-020-5220	85
405-020-5705	85
405-020-6900	85
405-020-7501	85
405-020-7709	85
405-020-7907	85
405-040-6102	399
405-011-7305	85
405-011-7404	85
405-011-7503	85
405-011-7513	85
405-011-8401	85
405-011-8500	85
405-011-8609	85
405-012-2002	85
405-012-2101	85
405-012-2309	85
405-012-7908	289A
405-012-8004	289A
405-013-2209	375
405-013-6207	399
405-013-6306	399
405-013-6801	289A
405-013-7006	289A
405-014-2406	31
405-014-2505	31
405-014-8408	157
405-014-8409	157
405-014-8507	157
405-014-8606	157
405-014-9207	10
405-016-1100	85
405-016-6600	85
405-016-8109	157
405-017-1901	289A
405-018-2501	2359
405-018-2600	2357
405-018-7100	382
405-018-7209	382
405-019-1909	85
405-019-2708	85
405-019-2807	85
405-019-2817	85
405-019-3804	85
405-019-4504	85
405-019-4505	85
405-019-6805	85
405-021-5605	172A
405-022-0005	11
405-022-4409	2302
405-022-6809	2331
405-023-4903	382
405-023-5009	382
405-023-5306	382
405-024-9907	85
405-025-0200	85
405-027-0802	459
405-027-1007	459
405-039-3303	289A
405-039-3402	289A
405-039-8001	11
405-041-6507	157
405-041-6705	157
405-053-0504	5013A
405-056-0880	2302
405-056-8701	2302
405-058-0802	290A
405-058-4800	2311
405-059-9804	152
405-059-9903	152
405-064-7307	153
405-064-7406	153
405-066-4304	157
405-082-2407	2331
405-083-1300	2308
405-095-9004	2308
405A	5940
405B	5944
405C	5944
405D	5944
406-000-2806	373
406-000-2905	373
406-000-3001	373
406-000-3100	373
406-000-3209	374
406-000-3308	374
406-000-3407	374
406-000-3506	374
406-000-3605	157
406-000-5302	399
406-000-5708	375
406-000-6309	375
406-000-6804	290A
406-000-7108	398
406-000-7603	398
406-001-0900	157
406-004-9702	2311
406-006-6504	290A
407-002-9602	3098
407-004-8306	125
407-004-9105	552
407-005-860Z	552
407-005-2303	552
407-005-4208	177
407-005-4505	519
407-005-7605	125
407-005-8602	552
407-006-0407	552
407-006-0902	552
407-006-3903	552
407-006-4108	552
407-006-5709	580
407-006-6706	552
407-007-6605	552
407-007-6606	552
407-007-6903	552
407-007-7405	552
407-007-7603	552
407-007-9904	177
407-008-0207	177
407-008-6001	595
407-008-6704	519
407-009-8905	580
407-009-9100	580
407-050-2501	5036A
407-070-8408	5018A
407-011-3004	552
407-011-3103	552
407-011-4308	552
407-011-4407	552
407-012-4208	177
407-012-4406	177
407-012-5809	177
407-012-6202	595
407-012-6212	595
407-013-1008	177
407-013-1206	177
407-013-1909	552
407-013-2609	109
407-013-3200	552
407-013-4207	177
407-013-4306	519
407-013-6508	519
407-013-7109	177
407-016-0107	30001
407-016-4207	177
407-016-7205	3099
407-048-1103	5010A
407-048-1130	5010A
407-048-1608	5010A
407-048-2001	5011A
407-048-3206	5014A
407-048-3404	5014A
407-048-3503	5014A
407-048-3701	5015A
407-048-4005	5015A
407-048-4203	5015A
407-048-5101	5018A
407-048-5200	5018A
407-048-5606	5019A
407-048-5903	5019A
407-048-6603	5020A
407-048-6900	5022A
407-048-7105	5022A
407-048-7303	5012A
407-048-7600	5022A
407-048-7808	5022A
407-048-7907	5006A
407-048-8003	5023A
407-049-2901	5073A
407-049-3403	142A
407-051-6409	5008A
407-052-3506	5037A
407-053-0702	5010A
407-053-6001	5010T1
407-054-0008	5019A
407-054-3306	5021A
407-054-4709	5022A
407-054-4808	5022A
407-054-5805	5023A
407-055-7907	5006A
407-055-7909	5006A
407-056-7906	5010A
407-056-8002	5010A
407-057-4102	5014A
407-057-4201	5014A
407-057-6304	5014A
407-057-9701	5018A
407-057-9800	5018A
407-059-3400	142A
407-075-9509	5014A
407-079-2605	580
407-088-6011	595
407-088-6502	552
407-095-8001	506
407-096-9809	5013A
407-102-6006	109
407-103-1604	588
407-103-6500	580
407-104-2204	3098
407-104-2402	3098
407-124-5506	552
407-124-5605	587
407-124-6404	552
407-143-2708	5036A
407A	5850
407B	5852
407C	5854
407D	5854
407F	5856
407H	5858
407K	5860
407M	5862
407P	5866
407RA	5851
407RB	5853
407RC	5855
407RD	5855
407RF	5857
407RH	5859
407RK	5861
407RM	5863
407RP	5867
407RS	5867
407RV	5869
407RZ	5869
407S	5866
407V	5868
407Z	5868
408-000-0301	3092
408-008-2406	519
408-008-8606	125
408-009-9008	552
408-009-9107	5009A
408-009-9206	580
408-009-9305	552
408-009-9404	116
408-010-0902	5014A
408-014-8408	157
408A	5870
408B	5872
408C	5874
408D	5874
408F	5876
408H	5876
408K	5880
408M	5882
408P	5886
408RA	5871
408RB	5873
408RC	5875
408RD	5875
408RF	5877
408RH	5877
408RK	5881
408RM	5883
408RP	5887
408RS	5887
408RV	5891
408RZ	5891
408S	5886
408V	5890
408Z	5890
409-001-0604	1780
409-004-5705	15023
409-004-8409	15007
409-009-2709	4053B
409-017-7208	1685
409-017-7505	1798
409-019-3109	1728
409-019-4205	1838
409-019-4700	1538
409-019-5608	15002
409-019-5707	1797
409-019-6209	1658
409-019-6605	1836
409-036-0105	1847
409-042-9000	74LS156
409-047-8602	1778
409-047-9104	1742
409-047-9203	1743
409-051-2801	4052B
409-051-3006	4053B
409-053-7309	1677
409-083-0103	7004
409-1(RCA)	222
409-132-7909	4053B
409-135-5506	15042
409-146-7001	1863
409-156-6605	1863
409-173-2703	1855
409-243-0806	1777
409A	5892
409B	5894
409C	5896
409D	5896
409F	5898
409H	5900
409K	5902
409M	5904
409P	5908
409RA	5893
409RB	5895
409RC	5897
409RD	5897
409RF	5899
409RH	5901
409RK	5903
409RM	5905
409RP	5909
409RS	5909
409RV	5911
409RZ	5911
409S	5908
409V	5910
409Z	5910
410-012-0150	102A
410-013-0240	102A
410-051-5808	74LS156
410-1214	102A
410-1215	102A
410-1216	102A
410-1217	102A
410-1270	103A
410-1515	102A
410-1516	102A
410-1517	102A
410-1610	158
411-237	128
411-1071	123AP
411-1072	123AP
411-1081	123AP
411-1084	123AP
411-1410	128
411-1610	129
411-1692	123AP
411-1693	123AP
411-1702	123AP
411-1723	123AP
411-1732	123AP
411-2562	159
411-2602	159
412	100
412(ZENER)	5072A
412-0669	196
412-1A5	123AP
412-1300	130
412-1370	184
412-1380	185
412-1411	128
412-1516	102A
412-1611	129
412-3055	130
412Z4	141A
413	152
413(CONCERT-HALL)	177
413(E.F.JOHNSON)	241
413(TRUETONE)	177
413-0149	104
414	123AP
414A-15	121
416A	6050
416B	6050
416C	6054
416D	6054
416F	6058
416H	6060
416K	6064
416M	6064
416P	6068
416RA	6051
416RB	6051
416RC	6055
416RD	6055
416RF	6059
416RH	6061
416RK	6065
416RM	6065
416RP	6069
416RS	6069
416RV	6073
416RZ	6073
416S	6068
416V	6072
416Z	6072
417-2	160
417-4-00226	196
417-5	102A
417-6	158
417-7	123AP
417-11	160
417-12	160
417-13	160
417-14	160
417-16	160
417-17	102A
417-18	158
417-19	107
417-20	121
417-21	158
417-22	160
417-23	160
417-25	160
417-26	160
417-27	160
417-28	158
417-29	179
417-29BLK	179
417-29GRN	179
417-29WHT	179
417-30	121
417-31	160
417-32	121
417-33	160
417-35	160
417-36	160
417-37	160
417-38	160
417-39	160
417-40	102A
417-41	102A
417-42	179
417-43	129
417-44	121
417-45	121
417-46	121
417-47	102A
417-48	102A
417-49	128
417-50	160
417-51	158
417-52	102A
417-53	160
417-54	160
417-56	160
417-57	160
417-58	160
417-59	128
417-60	160
417-62	104
417-66	160
417-67	123AP
417-68	160
417-69	123AP
417-70	160
417-71	160
417-72	160
417-73	102A
417-74	102A
417-75	102A
417-76	160
417-77	123AP
417-78	102A
417-79	160
417-81	6400
417-83	108
417-84	108
417-85	108
417-87	128
417-88	128
417-89	128
417-90	121
417-91	123AP
417-92	123AP
417-93	123AP
417-93-12903	123AP
417-94	123AP
417-99	121
417-100	128
417-101	162
417-102	106
417-103	102A
417-104	175
417-105	123AP
417-106	123AP
417-107	123AP
417-108	123AP
417-108-13163	199
417-109	128
417-109-13163	123AP
417-110	123AP
417-110-13163	123AP
417-111	129
417-112	127
417-113	179
417-114	128
417-114-13163	123AP
417-115	154
417-115-13173	128
417-116	159
417-116-13165	159
417-118	123AP
417-119	704
417-120	179
417-121	103A
417-122	102A
417-123	726
417-124	108
417-125	108
417-125-12903	107
417-126	123AP
417-126-12903	199
417-127	123
417-128	128
417-129	123AP
417-132	159
417-133	128
417-134	123AP
417-134-13271	123AP
417-135	123AP
417-136	128
417-137	128
417-138	129
417-139	130
417-139-13286	181
417-139A	130
417-140	133
417-141	121
417-142	179
417-143	160
417-144	184
417-145	185
417-146	158
417-147	158
417-148	158
417-149	158
417-150	158
417-151	158
417-152	158
417-153	159
417-153-1341	234
417-153-13431	234
417-154	107
417-155	128
417-155-13163	123AP
417-158	162
417-159	157
417-160	131
417-161	172A
417-162	130
417-167	133
417-168	159
417-169	133
417-170	129
417-171	123AP
417-171-13163	123AP
417-172	123AP
417-172-13271	123AP
417-175	196
417-175-12993	152
417-176	159
417-177	28
417-178	128
417-180	128
417-181	129
417-182	159
417-183	6400
417-184	159
417-185	123AP
417-187	6400
417-190	107
417-192	123AP
417-193	128
417-194	133
417-195	157
417-196	159
417-196-13262	234
417-197	123AP
417-199	175
417-200	159
417-201	159
417-202	711
417-203	196
417-204	162
417-205	107

PART NUMBER	NTE REPLACEMENT
417-206	220
417-207	220
417-211	132
417-212	130
417-212A	130
417-213	123AP
417-214	181
417-214-13286	181
417-215	130
417-215-13286	130
417-215A	130
417-216	121
417-217	123AP
417-218	123AP
417-219	123AP
417-220	190
417-221	211
417-222	172A
417-223	222
417-224	128
417-225	185
417-226-1	123AP
417-226-13163	199
417-227	157
417-228	123AP
417-229	123AP
417-230	396/427
417-231	133
417-232	154
417-233	128
417-233-13163	123AP
417-234	129
417-234-13165	159
417-235	159
417-235-13262	159
417-237	128
417-237-13163	128
417-239	163A
417-240	222
417-241	133
417-242-8181	159
417-243	161
417-244	123AP
417-244-12903	199
417-245	171
417-246	133
417-247	128
417-248	163A
417-250	128
417-252	133
417-253	133
417-254	181
417-255	129
417-257	128
417-258	161
417-260	129
417-260-50127	159
417-262	161
417-273	130
417-273-13286	130
417-282	130
417-283	123AP
417-283-13271	199
417-284	106
417-286	280
417-289	197
417-294	287
417-298	196
417-801	123AP
417-801-12903	123AP
417-821-13163	128
417-822-13262	129
417-836	288
417-852	152
417-863	222
417A	5980
417B	5982
417C	5986
417D	5986
417F	5988
417H	5990
417K	5992
417M	5994
417P	5998
417RA	5981
417RB	5983
417RC	5987
417RD	5987
417RF	5989
417RH	5991
417RK	5993
417RM	5995
417RP	5999
417RS	5999
417RV	6003
417RZ	6003
417S	5998
417V	6002
417Z	6002
418A	5980
418B	5982
418C	5986
418D	5986
418E	5990
418F	5988
418H	5990
418K	5992
418M	5994
418P	5998
418RA	5981
418RB	5983
418RC	5987
418RD	5987
418RF	5989
418RH	5991
418RK	5993
418RM	5995
418RP	5999
418RS	5999
418RV	6003
418RZ	6003
418S	5998
418V	6002
418Z	6002
419-1	69
419-2	69
419A	5980
419B	5982
419C	5986
419D	5986
419F	5988
419H	5990
419K	5992
419M	5994
419P	5998
419RA	5981
419RB	5983
419RC	5987
419RD	5987
419RF	5989
419RH	5991
419RK	5993
419RM	5995
419RP	5999
419RS	5999
419RV	6003
419S	5998
419V	6002
420-2003-173	125
420-2005-000	113A
420-2104-570	125
420-2106-270	505
420PB30	5595
420PB50	5595
420PB60	5595
420PB80	5596
420PB100	5596
420PB120	5596
420T1	102A
421-1	152
421-2	153
421-3	152
421-4	153
421-5	331
421-6	160
421-6B	160
421-7	160
421-7B	160
421-8	332
421-8B	160
421-9	102A
421-10	102A
421-11	102A
421-11B	102A
421-12	102A
421-12B	102A
421-13	102A
421-13B	102A
421-13C	102
421-14	102A
421-14B	102A
421-15	102A
421-15B	102A
421-16	126
421-17	126
421-18	124
421-19	102
421-20	126
421-20B	126
421-21	126
421-21B	126
421-22	126
421-22B	126
421-24	121
421-25	121
421-26	126
421-4027	116
421-6599	121
421-7143	102A
421-7443	116
421-7443A	116
421-7444	123AP
421-8109	102A
421-8111	123AP
421-8310	124
421-9644	123AP
421-9670	123AP
421-9671	102A
421-9682	100
421-9683	108
421-9792	160
421-9840	123AP
421-9862	103A
421-9862A	102A
421-9863	102A
421-9863A	102A
421-9864	102A
421-9864A	102A
421-9865	116
421T1	102A
422-0960	175
422-0222	102A
422-0738	123AP
422-0739	129
422-0961	130
422-1232	129
422-1233	128
422-1234	123AP
422-1362	116
422-1401	108
422-1402	108
422-1403	126
422-1404	128
422-1405	129
422-1406	102A
422-1407	123AP
422-1408	125
422-1443	121MP
422-1866	116
422-2008	129
422-2158	128
422-2532	108
422-2533	123AP
422-2534	123AP
422-2535	102A
422-2540	116
422-2778	160
422-2779	160
422-2780	160
423-800-235	9933
423-800175	9932
423-800176	9962
423-800177	9932
423-800178	9946
423-800194	9949
423-800202	9936
423-800223	9097
423-800234	9930
423-800236	9093
424-9001	175
427-1	190
427-2	210
427-3	210
427-6967	5608
427N2	190
428-1	49
428-2	49
428N2	49
429-0092-1	160
429-0092-2	102A
429-0092-3	102A
429-0092-56	109
429-0093-69	126
429-0093-71	125
429-0094-39	126
429-0910-50	160
429-0910-51	102A
429-0910-52	102A
429-0910-53	110MP
429-0910-54	109
429-0455	125
429-0958-41	166
429-0958-42	123AP
429-0958-43	137A
429-0981-12	107
429-0985-12	107
429-0986-12	108
429-0989-68	116
429-10001-0A	5870
429-10002-0A	5874
429-10036-0A	519
429-10036-0B	519
429-10054-0A	519
429-20004-0B	177
430	123AP
430(ZENITH)	123AP
430-31	116
430-85	158
430-86	123AP
430-87	123AP
430-1044-0A	123AP
430-10034	123AP
430-10034-06	123AP
430-10047-0C	128
430-10053-0	123AP
430-10053-0A	123AP
430-20013-0B	159
430-20018-0A	159
430-20021	159
430-20023-0A	159
430-20026-0	159
430-22861	108
430-23190	181
430-23212	123AP
430-23221	123AP
430-23222	129
430-23223	128
430-23843	130
430-23844	128
430-25762	132
430-25763	108
430-25764	108
430-25765	108
430-25766	123AP
430-25767	108
430-25834	131
430-203845	129
430CL	123AP
431-26551A	722
432-1	128
433	123AP
433(ZENITH)	123AP
433-1	123AP
433-1(SYLVANIA)	123AP
433-2	2302
433CL	123AP
433M852	129
434	199
434-1	159
434-4	159
435-1	123AP
435-2	123AP
435-21026-0A	7400
435-21027-0A	7402
435-21028-0A	7404
435-21029-0A	7408
435-21030-0A	7410
435-21033-0A	7420
435-21034-0A	7451
435-21035-0A	7486
435-23006-0A	7473
435-23007-0A	7474
435-40012	116
435A	5981
435B	5983
435C	5987
435D	5987
435F	5989
435H	5991
435K	5993
435M	5995
435P	6068
435S	6068
435V	6072
435Z	6072
436-403-001	123AP
436-404-002	159
436-10010-0A	7492
436-10011-0A	7496
436A	5981
436B	5983
436C	5987
436D	5987
436F	5989
436H	5991
436K	5993
436M	5995
436P	5999
436S	5999
436V	6003
436Z	6003
437-1	399
437-1(RCA)	787
437-2(RCA)	787
437-3(RCA)	787
437A	5871
437B	5873
437C	5875
437D	5875
437F	5877
437H	5879
437K	5881
437M	5883
437P	5886
437S	5886
437V	5890
438-1(RCA)	788
438-2(RCA)	788
438-3(RCA)	788
439-1(RCA)	711
439-2(RCA)	789
441-1071	199
441A	5850
441B	5852
441C	5854
441D	5854
441F	5856
441H	5858
441K	5860
441M	5862
441P	5866
441S	5866
441V	5868
441Z	5868
442-1	319P
442-2	909D
442-5	780
442-7	909D
442-8	703
442-16	722
442-18	746
442-20	703
442-20-14299	703
442-28	708
442-30	309K
442-30-2897	309K
442-41	725
442-46	801
442-56	747
442-59	783
443-1	7400
443-2	7420
443-4	7472
443-5	7473
443-6	7474
443-7	7490
443-7-16088	7490
443-12	7410
443-13	7475
443-16	7476
443-18	7404
443-23	74122
443-27	9093
443-32	74121
443-35	7441
443-36	7447
443-43	74H102
443-44	7413
443-44-2854	7413
443-45	7408
443-46	7402
443-58	74H11
443-65	7427
443-66	74192
443-68	74H10
443-71	74H00
443-77	7438
443-87	74145
443-162	74193
443-623	7411
443-623-51644	7411
443-625	74132
443-628	74196
444(SEARS)	123AP
444-0012-PT2	160
444-012-P1	160
444-1	89
444-1(IC)	1754
444-1(TRANS)	89
445-0023	130
445-0023-P1	130
445-0023-P3	130
445-0023-P4	130
445-0028-P1	5547
445-0028-P2	5547
445-0034-1	181
445-0303-001	5642
445-0303-002	5642
445-1	1632
445-1(RCA)	711
446A	5851
446B	5853
446C	5855
446D	5855
446F	5857
446H	5859
446K	5861
446M	5863
446P	5866
446S	5866
446V	5868
446Z	5868
447	123AP
447(ZENITH)	123AP
447-1	319P
448A662	128
449	184
450-1	123AP
450-1167-1	159
450-1167-2	123AP
450-1261	123AP
451-3	159
451D	5944
454-A2534-1	116
454-A2534-10	116
454A25	116
454A104	128
455-1	126
456-2	123AP
458	192
458-056	53
458-3	192
460-1	159
460-2(RCA)	789
460-3(RCA)	789
460-1009	177
460-1013	116
461-1006	159
461-1014	129
461-1048	129
461-1055-01	159
461-2001	234
462-0119	123AP
462-3	196
462-1000	123AP
462-1007	128
462-1009-01	123AP
462-1016	128
462-1019	128
462-1038-01	199
462-1059	198
462-1061	123AP
462-1063	123AP
462-1066-01	199
462-2002	123AP
462-2004	199
462-I007	128
464.062.15	137A
464-100-19	109
464-103-19	109
464-106-19	109
464-110-19	110MP
464-111-19	109
464-113-19	109
464-119-19	110MP
464-280-19	117
464-285-15	116
464-285-19	117
464-311-19	140A
465-005-19	102A
465-080-19	102A
465-032-19	160
465-036-19	102A
465-042-19	160
465-045-19	160
465-049-19	160
465-061-19	160
465-067-19	158
465-072-19	102A
465-073-19	102A
465-075-19	102A
465-082-19	102A
465-086-19	160
465-1A5	160
465-2A5	103A
465-4A5	101
465-106-19	123AP
465-108-19	158
465-115-19	102A
465-132-19	102A
465-137-19	131
465-146-19	160
465-163-19	102A
465-165-19	102A
465-166-19	131MP
465-181-19	107
465-191-15	102A
465-199-19	139A
465-206-19	131
465-223-19	160
465-260-15(NPN)	155
465-260-15(PNP)	131
465A-15	160
465B-15	160
465C-15	121
466-1A5	102A
466-2A5	102A
466-3A5	102A
469-199-19	5078A
469-646-3	128
470PB30	5595
470PB50	5595
470PB60	5595
470PB80	5596
470PB100	5596
470PB120	5596
471-009	726
471-010	116
471-1	171
471-1(METAL)	128
471-1(PLASTIC)	188
472-0309-001	128
472-0445-001	128
472-0491-001	123AP
472-0946-001	130
472-0946-002	130
472-1198-001	123AP
473A31	121
473B5	102A
473B6-2	102
473B6-2A	102
473B6-4	102
473B6-5	102
473B6-7	102
474-004	116
474-025	116
474-1	123AP
474-3A5	100
474A410AXP001	124
474A410BEP2	152
474A410BW-2	152
475-018	5802
475-1	159
476-1	397
476-2	159
477-0380-001	9945
477-0404-002	910
477-0375-001	9932
477-0376-001	909
477-0376-002	909D
477-0377-001	9930
477-0379-001	9962
477-0381-001	9946
477-0412-004	7473
477-0415-002	7450
477-0417-002	7453
477-0542-001	941
477-20	924
477A15	105
477B15	121MP
477C15	121MP
478C	5994
479-0547-001	519
479-0663-005	177
479-1	287
479-1006-002	5529
479-1012-001	519
479-1013-001	519
479-1013-002	519
479-1055-001	519
479-1066	5529
479-1163-001	519
479-1229-001	519
479-1248-001	519
480-1	194
480-9(SEARS)	131
481-0001	116
481-0004	5802
481-0006	519
481-0009	5340
481-201-A	128
481-201-B	128
481-34842	191
482-0100	262
482-0006	159
482-0007	130
482-0010	293
482-0013	261
482-0014	123AP
482-0015	262
482-0016	291
482-0019	261
482-1	159
483-3141	123AP
484A15	121
486-1551	123AP
486-40235-G02	116
488-2(SEARS)	108
488B15	160
488C15	100
490-2(SEARS)	108
491-2(SEARS)	108
491A948	128
491N(ITT)	75491B
492-1A5	105
492N(ITT)	75492B
493N(ITT)	75493
499	123AP
499(CHRYSLER)	152
499(ZENITH)	123AP
499-1	123AP
499-1A(ZENITH)	123AP
500-1	123AP
500-4	123AP
500B10	125
500S10	125
501-023762	181
501-363-2	5802
501-4249	123AP
501ES001M	108
501T1	160
502	123AP
503-T10192	156
503-T21271	109
503-T21472	109
503-T21651	614
503T1	160
504T1	160
505ES105	176
505T1	160
506T1	160
507T1	160
508-1(RCA)	128
508CP4	284
508ES020P	106
508ES021P	106
508T1	160
509	123AP
509(SEARS)	123AP
509-1	238
509ES025P	102
509ES0258	176
509R	290
509Y	290
510	514
510A90	109
510ED46	109
510ES030M	192
510ES031M	192
510IN60	109
510IS34	109
510LN60	109
510LS34	109
511-1	47
511-3	5531
511-515	123
511-519	123
511-898	116
511ES035P	192
511ES036P	192
511S345	109
512ES040P	176
512RED	123AP
513ES045P	176
514-062025	966
514-033338	123AP
514-042791	519
514-044910	234
514-047830	152
514-054214	130
514-058621	180
514-059342	5650
514-0594463	7400
514-059464	7403
514-059468	74150
514-059628	4011B
514-061986	7410
514-1(RCA)	127
514-100576	56022
514-100684	3046
514-101843	4042B
514-102661	4066B
514-102758	6508
514-103420	778A
514-103488	4070B
514-103682	960
514-103684	968
514-103685	969
514-103697	902
514-103698	7447
514-103699	4028B
514-103700	2011
514-103701	4556B
514-103702	4099B
514-103704	7417
514-112279	941M
515	123
515-074	123AP
515-299	116
515-521	108
515ES045M	106
515ES046M	106
515ORN	123AP
516	123
516-1(RCA)	159
516ES047M	106
516ES048M	106
517-0021	116
517-0025	116
517-0031	116
517-0033	116
517-1	2310
517-518	123
518-499	116
519-1	123AP
519-1(RCA)	123AP
519ES067M	123AP
519ES068M	123AP

PART NUMBER	NTE REPLACEMENT
520-1(RCA)	124
520-301	128
520ES070M	106
520T1	100
521-081	110MP
521-094	116
521-1(RCA)	108
521-145	109
521-9185	3000
521-9186	3001
521-9189	3007
521-9195	3001
521-9206	3010
521-9207	3011
521-9217	3020
521-9224	3024
521-9225	3021
521-9246	3022
521-9248	3021
521-9249	3022
521-9250	3024
521-9256	3022
521-9258	3021
521-9260	3024
521ES071M	106
521T1	100
522	123AP
522(ZENITH)	107
522-726	116
522-893	113A
522-958	170
522ES075M	192
522ES076M	192
523-0001-001	116
523-0001-002	116
523-0001-003	116
523-0001-004	116
523-0001-005	116
523-0001-006	116
523-0001-007	125
523-0001-008	125
523-0001-009	125
523-0001-010	125
523-0006-002	519
523-0007-001	519
523-0009-041	610
523-0009-049	614
523-006-002	177
523-0013-002	116
523-0013-201	519
523-0017-001	156
523-0501-002	116
523-0501-003	116
523-1000-001	116
523-1000-067	109
523-1000-294	109
523-1000-295	109
523-1000-326	109
523-1000-881	177
523-1000-882	116
523-1000-883	519
523-1002-326	109
523-1500-002	116
523-1500-067	109
523-1500-803	519
523-1500-881	109
523-1500-883	519
523-2001-100	140A
523-2003-001	109
523-2003-0-1	109
523-2003-100	140A
523-2003-101	5096A
523-2003-110	5074A
523-2003-120	142A
523-2003-130	143A
523-2003-140	144A
523-2003-150	145A
523-2003-160	5075A
523-2003-170	5076A
523-2003-180	5077A
523-2003-190	5078A
523-2003-200	5079A
523-2003-220	5080A
523-2003-240	5081A
523-2003-250	5082A
523-2003-270	146A
523-2003-300	5084A
523-2003-330	147A
523-2003-339	5066A
523-2003-360	5085A
523-2003-369	134A
523-2003-390	5086A
523-2003-399	5067A
523-2003-430	5087A
523-2003-439	5068A
523-2003-450	5088A
523-2003-470	5088A
523-2003-479	5069A
523-2003-500	5089A
523-2003-510	5089A
523-2003-519	135A
523-2003-520	5089A
523-2003-560	5090A
523-2003-569	136A
523-2003-620	149A
523-2003-629	137A
523-2003-680	5092A
523-2003-689	5071A
523-2003-750	5093A
523-2003-759	138A
523-2003-820	150A
523-2003-829	5072A
523-2003-910	5095A
523-2003-919	139A
523-2004-100	5125A
523-2005-100	140A
523-2005-279	5063A
523-2005-369	134A
523-2005-759	138A
523-2005-829	5072A
523-2005-919	139A
523-2503-100	5125A
523-2503-150	145A
523-2509-100	5125A
523-4001-001	156
523-1000882	116
523ES077M	192
523ES078M	192
524-1(RCA)	229
524-2	229
524-2(RCA)	229
524-457	109
524WHT	123AP
525-24	116
525-26	125
525-212	125
525-498	116
525-877	109
526-1	294
526-376	116
527-062	113A
527-1	107
527-1(RCA)	108
527-798	117
528-325	117
529-1	229
530-073-31	136A
530-082-3	125
530-082-4	125
530-082-1003	117
530-086-1	116
530-088-1	116
530-088-2	117
530-088-3	125
530-088-1002	125
530-088-1003	125
530-088-1004	125
530-094-1	116
530-095-1	116
530-098-1	116
530-099-1	116
530-099-3	116
530-099-4	116
530-1(RCA)	108
530-2(RCA)	108
530-106-1	116
530-106-1001	125
530-109-1	116
530-111-1	116
530-111-1001	125
530-113-1	116
530-119-1	503
530-120-1	116
530-122-1	117
530-132-1	118
530-136-T	125
532-1	2315
532-1(RCA)	123AP
532-341	116
532-341A	116
535-1(RCA)	319P
535A	107
536-1	161
536-1(RCA)	161
536-2	161
536-2(RCA)	123AP
536D	123AP
536D9	123AP
536F	199
536F(JVC)	199
536FS	123AP
536FU	123AP
536G(WARDS)	123AP
536GT	199
536GU(WARDS)	128
536J2F	116
537D	123AP
537E	123AP
537FS	108
537FV	123AP
537FY	123AP
537J2F	116
538J2F	116
539-1(RCA)	123AP
539J2F	116
540-008	116
540-010	125
540-013	144A
540-014	116
540-015	5802
540-028	519
540-028-00	519
540-033-00	519
540-1(RCA)	159
540J2F	116
542-1033	128
542-1034	130
544-2002-004	726
544-2002-008	912
544-2006-001	1115
544-2006-011	1232
544-2009-555	955M
544-2020-002	987
544-3001-001	9924
544-3001-103	4001B
544-3001-117	4017B
544-3001-201	991
545-1	128P
546	108
546-1	129P
547J2F	125
549-1	106
549-2	159
549-2(RCA)	159
550-06300	152
550-001	179
550-0017	129
550-030	6410
550-040	324
550-050	467
550-026-00	123AP
550-027-00	159
550-031	133
550-033	199
550-052	467
550-058	129
550-061	287
550-062	130
550-065	467
550-066	188
550-067	159
550-069	159
550-072	189
550PB30	5595
550PB50	5595
550PB60	5595
550PB80	5596
550PB100	5596
550PB120	5596
551	229
551-0002	3042
551-008-00	941M
551-010-00	9946
551-030-00	978
551-013-00	9945
551-1(RCA)	123AP
551M	229
552(ITT)	2011
552-013-00	2060
552-013-00(RCA)	2060
552-013-01	2060
552-1(RCA)	154
553-1(RCA)	128
554(ITT)	2012
554-1	399
554-1(RCA)	730
554-2(RCA)	730
554-3(RCA)	730
554-4(RCA)	730
555	955M
555-1(RCA)	128
555-3	128
555-3(RCA)	128
555-4	128
555C	955M
555CP	955M
555D	955M
555V	955M
556	978
556(ITT)	2013
556D	978
558(ITT)	2014
558CP	926
559-1	159
559-1(RCA)	159
559-1516-001	128
560-1(RCA)	123AP
560-2	123AP
560-2(RCA)	123AP
561-0884-006	910D
561-0884-041	941D
561-0884-043	941M
561-0884-047	947D
561-1	2315
561-1(RCA)	123AP
561-2511-106	109
561-2511-120	109
561-2511-190	109
561-2511-210	109
561-2511-240	109
561-2511-290	109
561-2511-400	109
561-2511-503	109
561-2511-510	109
561-2511-530	109
561-2511-535	116
561-2511-538	109
561-2511-540	109
561-2511-544	109
561-2511-555	109
561-2511-558	109
561-2511-564	5048A
561-2511-570	109
561-2511-575	109
561-2511-580	177
561-2511-700	5007A
561-2511-900	5014A
561-2554-560	177
561-2554-570	177
561-2554-571	177
561-2554-577	177
561-2554-578	177
561-2554-610	177
561-2554-620	177
561-2554-820	177
561-2554-821	177
561-2554-824	177
561-2554-830	177
561-2554-841	177
561-2554-842	177
561-2554-850	177
561-2554-880	506
561-2556-250	177
561-2556-270	177
561-2556-290	177
561-2556-360	109
561-2556-450	116
561-2556-590	177
561-2556-620	177
561-2556-950	109
561-2557-050	5009A
561-2557-060	5012A
561-2557-070	5014A
561-2557-032	5006A
561-2557-042	5007A
561-2557-062	5120A
561-2557-092	137A
561-2557-142	140A
561-2557-152	5130A
561-2557-161	142A
561-2557-191	5075A
561-2560-460	5005A
561-2560-461	5066A
561-2560-480	5067A
561-2560-491	5068A
561-2560-501	5069A
561-2560-520	136A
561-2560-522	136A
561-2560-530	5013A
561-2560-531	137A
561-2560-680	5028A
561-2560-754	5071A
561-2560-755	5015A
561-2560-756	5072A
561-2560-757	139A
561-2560-758	140A
561-2560-816	5070A
561-2560-820	137A
561-2560-823	137A
561-2560-825	137A
561-2560-914	519
561-2560-915	177
561-2560-935	139A
561-2560-957	5071A
561-2560-958	138A
561-2560-961	140A
561-2560-962	140A
561-2560-963	142A
561-2560-964	146A
561-2560-966	5027A
561-2560-967	5027A
561-2560-969	5080A
561-2560-970	5081A
561-2560-971	146A
561-2561-313	5017A
561-2561-321	5038A
561-2561-322	5040A
561-2561-358	5196A
561-2561-359	5197A
561-2561-370	5214A
561-2561-590	5178AK
561-2561-604	5186AK
561-2561-766	137A
561-2561-776	137A
561-2561-780	5079A
561-2561-788	5089A
561-2568-191	5194A
561-2568-280	5206A
561-2568-300	5210A
561-2568-312	5212A
561-2579-707	5181AK
561-2580-003	5216AK
561-2580-040	5220A
561-2580-152	5232A
561-2580-392	149A
561-2583-110	5254A
561-2583-141	5257A
561-2583-606	177
561-2583-608	177
561-2583-791	5127A
561-2583-793	5127A
561-2588-092	5151A
561-2588-185	5068A
561-2588-930	5116A
561-2589-930	5174AK
561-2589-971	5178AK
561-2590-090	177
561-2591-480	519
561-2591-540	519
561-2593-701	5000A
561-2594-480	519
561-2597-180	5133A
561-2597-280	5066A
561-2597-291	134A
561-2597-310	5068A
561-2597-321	5069A
561-2597-341	136A
561-2597-350	137A
561-2597-351	137A
561-2597-361	5071A
561-2597-381	5072A
561-2597-383	139A
561-2597-420	142A
561-2597-421	142A
561-2597-440	145A
561-2597-441	145A
561-2597-464	5077A
561-2597-471	5079A
561-2597-570	5089A
561-2598-000	5005A
561-2598-250	5010A
561-2599-340	506
561-2599-360	506
561-2600-230	139A
561-2602-210	5000A
561-2602-300	5010A
561-2602-310	139A
561-2602-350	5071A
561-2602-430	143A
561-2602-440	144A
561-2603-383	5116A
561-2603-530	5131A
561-2654-756	5012A
561-2706-000	506
561-2707-770	519
561-2709-560	148A
561-4800-350	5673
561-4800-402	5673
561-4800-403	5675
561-4800-425	5635
561-4800-440	5651
561-4800-442	5651
561-4800-443	5652
561-4800-445	5695
561-4800-446	5635
561-4800-448	5651
561-4800-452	5673
561-4800-502	5673
561-4800-520	6403
561-5004-412	116
561-5005-360	116
561-5005-380	116
561-5005-390	116
561-5005-400	116
561-5005-470	116
561-5005-890	177
561-5006-460	116
561-5006-470	116
561-5008-810	116
561-5010-820	116
561-5010-840	116
561-5010-950	116
561-5010-960	116
561-5011-190	5840
561-5011-200	5842
561-5011-842	5982
561-5011-850	5986
561-5011-860	5986
561-5011-870	5988
561-5011-876	5989
561-5011-880	5990
561-5011-900	5994
561-5011-902	5994
561-5011-970	5992
561-5011-976	5987
561-5012-021	5874
561-5012-027	5875
561-5012-042	5878
561-5012-180	116
561-5012-210	116
561-5012-220	116
561-5013-422	5854
561-5013-432	5854
561-5015-660	5804
561-5015-662	116
561-5015-860	5840
561-5016-140	5854
561-5016-160	5861
561-5016-920	116
561-5016-930	116
561-5016-940	116
561-5016-950	116
561-5016-960	116
561-5017-640	116
561-5020-690	116
561-5020-700	116
561-5020-701	116
561-5020-710	116
561-5021-292	6022
561-5021-576	5989
561-5021-600	5994
561-5024-830	116
561-5026-100	116
561-5026-130	116
561-5031-930	116
561-5031-940	116
561-5031-950	116
561-5032-080	5940
561-5032-090	5942
561-5032-086	5941
561-5032-140	5952
561-5032-530	116
561-5032-770	116
561-5032-790	116
561-5032-890	6155
561-5032-891	6154
561-5032-930	6156
561-5034-951	177
561-5037-400	6356
561-5037-680	6002
561-5040-010	116
561-5040-020	116
561-5040-030	116
561-5040-040	116
561-5040-050	116
561-5040-060	125
561-5040-070	125
561-5040-440	6354
561-5040-480	6354
561-5040-600	116
561-5040-821	5804
561-5040-830	116
561-5040-850	116
561-5045-270	5994
561-5047-210	5802
561-5053-970	5806
561-5106-830	5522
561-5106-880	5527
561-5106-890	5528
561-5106-900	5529
561-5106-920	5531
561-5117-750	5484
561-5138-980	5527
561-5138-990	5547
561-5141-720	5485
561-5144-420	5444
561-5144-440	5448
561-5150-600	5400
561-5150-610	5401
561-5150-620	5402
561-6160-368	5892
561-6160-550	166
561-6160-650	5312
561-6160-680	5401
561-6161-090	5801
561-6162-030	5483
561-6162-246	167
561-6162-247	156
561-6162-248	5455
561-6162-250	5483
561-6162-252	116
561-6162-295	5543
561-6163-050	5526
561-6163-070	5988
561-6163-080	6058
561-6163-025	116
561-6163-047	5988
561-6163-072	5989
561-6163-094	5526
561-6164-002	5314
561-6164-003	116
561-6164-025	116
561-6164-160	5496
561-6164-180	5878
561-6164-185	5900
561-6164-250	5990
561-6164-252	5990
561-6164-253	5545
561-6164-255	6060
561-6164-275	116
561-6164-280	116
561-6164-295	5993
561-6164-297	6064
561-6164-410	5294A
561-6164-420	5295A
561-6165-080	5486
561-6165-085	5527
561-6166-010	116
561-6166-020	5806
561-6168-800	541
561-6561-860	116
561-6800-035	103A
561-6800-109	102A
561-6800-123	100
561-6800-167	101
561-6800-169	101
561-6800-170	101
561-6800-174	105
561-6800-176	104
561-6800-188	102
561-6800-212	103A
561-6800-214	103A
561-6800-215	102A
561-6800-217	102A
561-6800-228	103A
561-6800-241	102
561-6800-242	104
561-6800-250	104
561-6800-270	102
561-6800-277	105
561-6800-301	121
561-6800-327	100
561-6800-335	123
561-6800-336	123
561-6800-337	107
561-6800-362	102
561-6800-376	104
561-6800-380	104
561-6800-396	100
561-6800-404	102A
561-6800-405	102
561-6800-406	102A
561-6800-414	100
561-6800-441	105
561-6800-444	103
561-6800-456	104
561-6800-466	102
561-6800-472	128
561-6800-482	123A
561-6800-484	123A
561-6800-495	123A
561-6800-497	128
561-6800-503	100
561-6800-508	102
561-6800-519	100
561-6800-520	100
561-6800-524	102
561-6800-526	102
561-6800-541	123
561-6800-555	121
561-6800-586	100
561-6800-591	102A
561-6800-597	100
561-6800-600	100
561-6800-652	102
561-6800-656	128
561-6800-657	128
561-6800-662	176
561-6800-669	121
561-6800-679	101
561-6800-685	101
561-6800-687	5526
561-6800-696	123
561-6800-697	128
561-6800-700	160
561-6800-706	108
561-6800-718	108
561-6800-741	160
561-6800-914	108
561-6800-916	108
561-6800-929	123A
561-6800-930	123A
561-6801-007	102
561-6801-008	102
561-6801-040	104
561-6801-034	129
561-6801-038	176
561-6801-100	100
561-6801-102	103A
561-6801-136	121
561-6801-175	102
561-6801-178	160
561-6801-182	176
561-6801-183	176
561-6801-184	176
561-6801-185	100
561-6801-301	160
561-6801-303	158
561-6801-304	101
561-6801-305	158
561-6801-308	101
561-6801-309	100
561-6801-311	101
561-6801-363	121
561-6801-365	121
561-6801-370	102
561-6801-372	102
561-6801-373	102
561-6801-378	102
561-6801-379	102
561-6801-381	102
561-6801-404	102
561-6801-415	102
561-6801-420	128
561-6801-502	104
561-6801-537	121
561-6801-542	179
561-6801-544	179
561-6801-545	179
561-6801-556	179
561-6801-557	179
561-6801-592	107
561-6801-605	101
561-6801-606	101
561-6801-613	128
561-6801-623	129
561-6801-666	121
561-6801-670	6400
561-6801-711	128
561-6801-755	104
561-6801-922	129
561-6801-926	102A
561-6801-990	128
561-6801-997	100
561-6801-998	100
561-6802-076	105
561-6802-078	105
561-6802-137	104
561-6802-147	104
561-6802-153	213
561-6802-156	213
561-6802-188	160
561-6802-218	123
561-6802-221	123A
561-6802-223	123A
561-6802-270	128
561-6802-369	123A
561-6802-375	102
561-6802-382	160
561-6802-484	123A
561-6802-501	123A
561-6802-564	102
561-6802-646	6401
561-6802-714	107
561-6802-869	121
561-6802-904	129
561-6802-905	129
561-6802-907	159
561-6802-908	159
561-6802-923	199
561-6802-924	199
561-6802-925	199
561-6802-996	160
561-6803-011	123A
561-6803-012	159
561-6803-013	123A
561-6803-053	128
561-6803-054	175
561-6803-055	130
561-6803-115	123A
561-6803-133	129
561-6803-135	159
561-6803-214	121
561-6803-215	121
561-6803-250	159
561-6803-300	311
561-6803-371	160
561-6803-391	199
561-6803-393	199
561-6803-397	199
561-6803-403	192A
561-6803-416	289
561-6803-417	289
561-6803-440	396
561-6803-442	284
561-6803-448	130
561-6803-460	133
561-6803-502	129

PART NUMBER	NTE REPLACEMENT
561-6803-504	159
561-6803-565	123AP
561-6803-566	123AP
561-6803-567	297
561-6803-568	128
561-6803-569	128
561-6803-585	124
561-6803-638	159
561-6803-639	159
561-6803-644	159
561-6803-645	129
561-6803-646	123AP
561-6803-702	159
561-6803-703	159
561-6803-705	297
561-6803-711	199
561-6803-715	130
561-6803-721	107
561-6803-732	127
561-6803-739	124
561-6803-766	175
561-6803-771	181
561-6803-772	181
561-6803-773	284
561-6803-789	219
561-6803-819	132
561-6803-822	459
561-6803-858	199
561-6803-902	283
561-6803-903	123AP
561-6803-904	123AP
561-6803-905	159
561-6803-906	159
561-6804-030	129
561-6804-037	129
561-6804-092	466
561-6804-123	123AP
561-6804-124	123AP
561-6804-125	159
561-6804-126	159
561-6804-234	129
561-6804-235	129
561-6804-237	128
561-6804-240	124
561-6804-249	159
561-6804-275	108
561-6804-348	280
561-6804-356	159
561-6804-360	326
561-6804-387	153
561-6804-389	153
561-6804-400	123AP
561-6804-401	123AP
561-6804-402	159
561-6804-403	159
561-6804-424	289
561-6804-851	6401
561-6804-855	466
561-6804-905	281
561-6804-921	184
561-6804-946	128
561-6805-190	184
561-6805-195	185
561-6805-240	283
561-6805-247	312
561-6805-294	152
561-6805-296	152
561-6805-302	181
561-6805-308	172A
561-6805-320	128
561-6805-322	129
561-6805-354	159
561-6805-415	397
561-6805-485	451
561-6805-486	132
561-6805-670	280
561-6805-830	287
561-6806-027	6402
561-6806-028	6402
561-6806-307	283
561-6901-000	100
561-6901-006	101
561-6901-008	103
561-6901-010	127
561-6901-110	127
561-6901-410	283
561-6901-411	385
561-6901-440	165
561-6901-473	193
561-6901-527	3042
561-6901-826	243
561-6901-850	175
561-6902-105	183
561-6902-521	184
561-6936-220	130
561-6940-251	175
561-6940-347	128
561-6952-923	123A
561-6953-003	102A
561-6953-004	102A
561-6953-006	160
561-6953-007	160
561-6953-009	121
561-6953-010	103A
561-6953-020	123A
561-6953-011	101
561-6953-021	124
561-6953-024	128
561-6953-025	129
561-6953-041	152
561-6953/020	123A
561-6954-030	292
561-6954-099	107
561-6955-935	133
561-6956-373	127
561-6956-515	289
561-6956-531	107
561-6956-534	159
561-6956-550	297
561-6956-553	172A
561-6956-555	159
561-6956-602	188
561-6956-651	189
561-6956-652	189
561-6956-740	265
561-6956-942	186
561-6958-405	189
562-1	109
562-1(RCA)	159
563-1(RCA)	159
564-1(RCA)	310
564-2(RCA)	308
564-5(RCA)	310
564-6(RCA)	308
564-7(RCA)	310
564-8(RCA)	308
565-072	128
565-073	152
565-074	123AP
565-1	128
565-1(RCA)	123AP
567-0003-011	123AP
567-2(RCA)	184
567-4(RCA)	152
568-1(RCA)	229
569-0320-809	941
569-0320-813	725
569-0320-814	9093
569-0320-818	9936
569-0320-820	9946
569-0320-821	9962
569-0320-822	9946
569-0320-826	9936
569-0320-831	923D
569-0540-355	955M
569-0540-358	778A
569-0540-623	923D
569-0690-301	912
569-0690-500	4001B
569-0690-501	4011B
569-0690-502	4013B
569-0690-550	4050B
569-0690-681	916
569-0880-430	9930
569-0880-444	9944
569-0880-445	9945
569-0880-446	9946
569-0880-450	9950
569-0880-458	9158
569-0880-462	9962
569-0541-000	9660
569-0541-030	9675
569-0541-018	9668
569-0541-037	9680
569-0541-038	9681
569-0544-300	9930
569-0544-304	9932
569-0544-305	9933
569-0544-308	9936
569-0544-312	9935
569-0544-318	9944
569-0544-322	9946
569-0544-328	9099
569-0544-348	9962
569-0773-600	955M
569-0773-610	778A
569-0773-800	7400
569-0773-811	7411
569-0881-801	74H01
569-0881-804	74H04
569-0881-810	74H10
569-0881-811	74H11
569-0881-820	74H20
569-0881-821	74H21
569-0881-822	74H22
569-0881-830	74H30
569-0881-840	74H40
569-0881-850	74H50
569-0881-851	74H51
569-0881-852	74H52
569-0881-853	74H53
569-0881-855	74H55
569-0881-860	74H60
569-0881-874	74H74
569-0882-600	7400
569-0882-601	7401
569-0882-602	7402
569-0882-603	7403
569-0882-604	7404
569-0882-605	7405
569-0882-606	7406
569-0882-607	7407
569-0882-608	7408
569-0882-609	7409
569-0882-610	7410
569-0882-612	7412
569-0882-613	7413
569-0882-614	7414
569-0882-616	7416
569-0882-617	7417
569-0882-620	7420
569-0882-625	7425
569-0882-627	7427
569-0882-630	7430
569-0882-632	7432
569-0882-633	7433
569-0882-637	7437
569-0882-638	7438
569-0882-640	7440
569-0882-641	7441
569-0882-642	7442
569-0882-650	7450
569-0882-651	7451
569-0882-653	7453
569-0882-654	7454
569-0882-660	7460
569-0882-672	7472
569-0882-673	7473
569-0882-674	7474
569-0882-675	7475
569-0882-676	7476
569-0882-680	7480
569-0882-682	7482
569-0882-685	7485
569-0882-686	7486
569-0882-689	7489
569-0882-690	7490
569-0882-692	7492
569-0882-693	7493A
569-0882-696	7496
569-0882-707	74107
569-0882-709	74109
569-0882-721	74121
569-0882-722	74122
569-0882-723	74123
569-0882-726	74126
569-0882-732	74132
569-0882-741	74141
569-0882-745	74145
569-0882-750	74150
569-0882-751	74151
569-0882-753	74153
569-0882-754	74154
569-0882-755	74155
569-0882-760	74160
569-0882-761	74161
569-0882-764	74164
569-0882-765	74165
569-0882-774	74174
569-0882-775	74175
569-0882-776	74176
569-0882-777	74177
569-0882-779	74179
569-0882-780	74180
569-0882-781	74181
569-0882-782	74182
569-0882-790	74190
569-0882-791	74191
569-0882-792	74192
569-0882-793	74193
569-0882-796	74196
569-0882-797	74197
569-0883-200	74S00
569-0883-203	74S03
569-0883-204	74S04
569-0883-205	74S05
569-0883-210	74S10
569-0883-211	74S11
569-0883-215	74S15
569-0883-220	74S20
569-0883-222	74S22
569-0883-240	74S40
569-0883-264	74S64
569-0883-265	74S65
569-0883-274	74S74
569-0883-312	74S112
569-0883-338	74S138
569-0883-340	74S140
569-0883-353	74S153
569-0883-357	74S157
569-0883-358	74S158
569-0883-374	74S174
569-0885-850	75450B
569-0885-853	75453B
569-0885-854	75452B
569-0886-800	74LS74A
569-0964-001	909D
569-0964-002	975
569-0965-006	9812
569-1(RCA)	123AP
569-1000-020	5117A
569-2142-100	116
569-8800-090	152
569-9440-102	3050
570-005503	123AP
570-004503	123AP
570-1	159
570-1(RCA)	159
570-2(RCA)	159
571-844	130
571-844A	130
572-0040-051	121
572-1	123AP
572-1(RCA)	123AP
572-3(RCA)	123AP
572-683	123AP
573-469	123AP
573-472	108
573-474	108
573-474A	108
573-475	108
573-479	123AP
573-480	123AP
573-481	123AP
573-491	108
573-494	108
573-495	108
573-507	108
573-509	108
573-515	124
573-518	160
573-529	102A
573-532	128
574	159
574-1	106
574-1(RCA)	159
574-844	162
575-0004-035	190
575-050	116
575-028	116
575-042	116
575-048	116
575C2	1140
576(RCA)	233
576-0001-002	159
576-0001-002(SEARS)	158
576-0001-003	102A
576-0001-004	123
576-0001-005	123
576-0001-006	108
576-0001-008	123AP
576-0001-009	102A
576-0001-012	123AP
576-0001-013	159
576-0001-014	102A
576-0001-018	123AP
576-0002-001	241
576-0002-001(SEARS)	152
576-0002-002	104
576-0002-003	130
576-0002-004	102A
576-0002-005	121
576-0002-006	123AP
576-0002-008	159
576-0002-009	105
576-0002-010	105
576-0002-011	184
576-0002-012	102A
576-0002-013	103A
576-0002-026	241
576-0002-029	241
576-0003-001	108
576-0003-002	108
576-0003-003	108
576-0003-004	108
576-0003-005	108
576-0003-006	108
576-0003-007	108
576-0003-008	126
576-0003-009	126
576-0003-010	160
576-0003-020	108
576-0003-011	123AP
576-0003-012	106
576-0003-013	126
576-0003-014	126
576-0003-015	126
576-0003-017	159
576-0003-018	108
576-0003-019	159
576-0003-021	108
576-0003-022	199
576-0003-023	161
576-0003-024	126
576-0003-025	160
576-0003-026	161
576-0003-027	108
576-0003-028	108
576-0003-029	107
576-0003-12(NPN)	123AP
576-0003-12(PNP)	159
576-0003-224	222
576-0004-001	154
576-0004-004	312
576-0004-005	195A
576-0004-006	195A
576-0004-007	195A
576-0004-008	311
576-0004-009	195A
576-0004-010	123
576-0004-02	128
576-0004-011	195A
576-0004-012	195A
576-0004-013	128
576-0004-035	190
576-0004-035(IC)	1117
576-0004-104	299
576-0004-105	235
576-0005-001	6400
576-0005-004	128
576-0006-003	133
576-0006-011	108
576-0006-221	221
576-0006-222	222
576-0006-227	222
576-0007-001	172A
576-0040-051	121
576-0040-251	130
576-0040-253	102A
576-0040-254	121
576-001	102A
576-001-013	106
576-002-001	186
576-002-004	102
576-003-009	160
576-005	102A
576-0036-212	123AP
576-0036-213	195A
576-0036-847	123
576-0036-913	195A
576-0036-916	123AP
576-0036-917	123AP
576-0036-918	108
576-0036-919	108
576-0036-920	123AP
576-0036-921	123AP
576-1	233
576-1(RCA)	161
576-3	723
576-14	740A
576-2000-278	105
576-2000-990	126
576-2000-993	126
576-2001-970	105
577-1(RCA)	123AP
577B196	5635
577R819H01	128
578-1(RCA)	102A
578-2303	159
579-1(RCA)	108
579R925H01	910
580-029	116
580R304H01	159
581B83-7	5697
585-5(RCA)	230
585-6(RCA)	231
585-7(RCA)	230
585-8(RCA)	231
586-024	909
586-2	123AP
586-2(RCA)	123AP
586-151	9930
586-152	9936
586-153	9946
586-154	9099
586-155	9962
586-187	9945
586-303	9932
586-308	9937
586-331	9806
586-412	9812
586-415	9157
586-425	9093
586-442	9158
586-517	9804
586-528	9802
586-546	9800
586-547	9808
586-780	9810
587-033	74170
588-2(RCA)	222
588-40-201	1100
588-40-202	1142
588-40-203	1087
588U	132
590-1(RCA)	159
590-591731	194
590-591811	194
590-593031	123AP
593D742-1	123AP
595-1	123AP
595-1(SYLVANIA)	123AP
595-2	123AP
595-2(SYLVANIA)	123AP
596-2	177
596-5	177
597-1	106
597-1(RCA)	159
598-2(RCA)	102A
599-1(RCA)	159
599P3430	199
600	116
600-104-308	158
600-188-1-21	128
600-188-1-23	123AP
600-188-1-20	123AP
600-188-1-22	194
600-188-1-13	123AP
600-207-801	199
600-224-605	199
600-229-201	123AP
600-301-801	123AP
600C	177
600HT20	5335
600HT30	5335
600HT40	5335
600HT50	5335
600HT60	5335
600X0100-066	177
600X0091-086	123AP
600X0092-086	108
600X0093-086	161
600X0094-086	161
600X0095-086	159
600X0096-066	109
600X0097-066	109
600X0098-066	113A
600X0099-066	116
600X0101-066	142A
600X0141-000	107
600X0143-000	107
600X0175-000	107
600X0186-000	112
600X0195-000	107
601	116
601(DIODE)	116
601(RCA)	123AP
601-0100792	128
601-0100793	123AP
601-0100810	234
601-0100865	7413
601-040	160
601-054	126
601-065	103A
601-1	123AP
601-1(DIODE)	177
601-1(RCA)	123AP
601-1(TRANS)	123AP
601-2	123AP
601-2(RCA)	123AP
601-36	283
601-38	130
601-113	108
601C	177
601X0048-066	116
601X0049-066	506
601X0150-066	109
601X0402-038	143A
601X0402-038(IC)	1046
601X0149-086	123AP
601X0151-066	109
601X0152-066	116
601X0224-066	116
601X0225-066	178MP
601X0226-066	143A
601X0226-0666	142A
601X0227-066	116
601X0375-006	506
601X0417-086	159
602-040	102A
602-032	121
602-075	160
602-56	159
602-60	159
602-61	108
602-113	108
602X0008-002	199
602X0018-000	123AP
602X0018-002	199
602X0019-000	116
603	289A
603-020	160
603-030	160
603-040	160
603-1(RCA)	123AP
603-113	108
603E	289A
603F	289A
603G	289A
604	123AP
604(SEARS)	123AP
604-030	160
604-080	160
604-1(RCA)	172A
604-3	172A
604-3(RCA)	172A
604-113	108
604B	116
604C	177
605	123
605-030	102A
605-113	108
606-020	102A
606-1(RCA)	108
606-113	116
606-6003-101	519
606-6003-102	519
606-6021-101	177
606-9601-101	123AP
606-9602-101	123AP
607-030	123AP
607-113	116
608	116
608-030	116
608-1(RCA)	128
608-2	128
608-2(RCA)	128
608-3	128
608-3(RCA)	128
608-101	116
608-112	127
608-113	116
609-020	160
609-030	116
609-112	123AP
609-113	116
610	116
610-001-103	116
610-009-2402	5018A
610-040	102A
610-040-1	102A
610-040-2	102A
610-050	160
610-050-1	160
610-050-2	160
610-050-3	160
610-070	123AP
610-070-1	123AP
610-070-2	123AP
610-070-3	123AP
610-080	102A
610-080-1	102A
610-017-706	177
610-035	102A
610-035-1	102A
610-036	102A
610-036-1	102A
610-036-2	102A
610-036-3	102A
610-036-4	102A
610-036-5	102A
610-036-7	102A
610-036-8	102A
610-039	121
610-039-1	121
610-041	108
610-041-1	108
610-041-2	108
610-041-3	108
610-042	108
610-042-1	108
610-043	102A
610-043-1	102A
610-043-2	102A
610-043-3	102A
610-043-4	102A
610-043-6	102A
610-043-7	102A
610-045	108
610-045-1	108
610-045-2	108
610-045-3	123AP
610-045-4	123AP
610-046-7	102A
610-051	160
610-051-1	160
610-051-2	160
610-051-4	160
610-052	126
610-052-1	126
610-053	160
610-053-1	160
610-053-2	160
610-055	160
610-055-1	160
610-055-2	160
610-055-3	160
610-056	126
610-056-1	126
610-056-2	126
610-056-3	126
610-056-4	126
610-067	121
610-067-1	121
610-067-2	121
610-067-3	121
610-068	121
610-068-1	121
610-069	108
610-069-1	108
610-071	124
610-071-1	124
610-072	108
610-072-1	108
610-072-2	108
610-073	108
610-073-1	108
610-074	126
610-074-1	126
610-076	123AP
610-076-1	123AP
610-076-2	123AP
610-077	123AP
610-077-1	123AP
610-077-2	123AP
610-077-3	123AP
610-077-4	123AP
610-077-5	123AP
610-078	123AP
610-078-1	123AP
610-079	102A
610-079-1	102A
610-083	129
610-083-1	129
610-083-2	129
610-083-3	129
610-1(RCA)	229
610C	116
611-1(RCA)	152
612	116
612-1	186
612-1(RCA)	152
612-1A5L	123AP
612-16	123AP
612-16(ZENITH)	108
612-16A	108
612-60039	126
612-60039A	126
612C	177
613	123AP
613(ZENITH)	108
613-2(RCA)	191
613-3(RCA)	191
613-4	154
613-4(RCA)	191
613-5(RCA)	154
613-72	108
614	116
614(ZENITH)	108
614-1	128
614-1(RCA)	123AP
614-2	123AP
614-2(RCA)	123AP
614-3	123AP
614-3(RCA)	123AP
614-12	108
614-118	177
614A1-5L	121
614A-1-5L	121
614C	177
614X1	102A
614X2	102A
614X3	102A
614X4	102A
614X5	102A
614X6	102A
614X7	102A
614X8	103A
614X9	102A
614X10	102A
615-1	107
615-1(RCA)	123AP
616	116
616-1	106
616-1(RCA)	159
616C	177
617-1(RCA)	108
617-10	123AP

PART NUMBER	NTE REPLACEMENT
617-15	109
617-17	109
617-29	123AP
617-46	116
617-50	102A
617-52	102A
617-53	116
617-54	160
617-55	160
617-56	126
617-57	160
617-58	160
617-62	116
617-63	123AP
617-64	123AP
617-65	161
617-66	116
617-67	123AP
617-68	123AP
617-69	158
617-70	102A
617-71	123AP
617-87	123
617-117	152
617-156	109
617-161	123AP
617-162	116
617-163	116
618	618
618-1(RCA)	222
618C	177
619	5642
619-1(RCA)	5642
619-2	5642
619-2(RCA)	5642
619-3	5641
619-3(RCA)	5641
620	116
620-1	159
620-1(RCA)	159
620-2(RCA)	159
620-56	106
620C	177
621-01081	123AP
621-1(RCA)	152
622	116
622-1	128
622-1(RCA)	128
622-2	128
622-2(RCA)	128
622C	177
623(RCA)	152
623-1	186
623-1(RCA)	152
623-2003-100	140A
624	116
624(RCA)	153
624-0005	113A
624-0006	113A
624-0007	113A
624-0009	116
624-0010	116
624-0011	109
624-1	185
624-1(RCA)	185
624-2(RCA)	185
625-1	123AP
625-1(RCA)	123AP
626	123AP
626(RECT)	125
626-1	123AP
626-1(RCA)	123AP
627-1	159
627-1(RCA)	159
628-2(RCA)	171
628-3	188
628-3(RCA)	188
629-3	189
629-3(RCA)	189
629A02	116
630-002	109
630-002-801	506
630-052	116
630-076	123AP
630-077	140A
630-079	109
630-086	148A
631-1	129
631-1(RCA)	194
631-3(SYLVANIA)	129
632-1(RCA)	196
632-1(SYLVANIA)	188
632-2(RCA)	196
632-3	196
632-3(RCA)	196
633-1(RCA)	171
634	85
634-1	107
634-1(RCA)	165
635	159
635-1	222
635-1(RCA)	221
635-2(RCA)	222
636-1(RCA)	152
637	164
637(RCA)	162
637-1	162
637-1(RCA)	162
638	123AP
638-1	128
638-1(RCA)	218
638H	175
638HJ	175
639	123AP
639(ZENITH)	123AP
639CL	128
640-1(RCA)	196
640-1(SYLVANIA)	152
642-028	109
642-068	113A
642-098	110MP
642-102	109
642-116	160
642-117	102A
642-119	109
642-126	177
642-132	109
642-147	160
642-150	102A
642-151	158
642-152	131
642-173	160
642-174	123AP
642-176	121
642-186	138A
642-199	109
642-202	160
642-206	104
642-207	160
642-216	166
642-217	131
642-219	116
642-221	109
642-229	107
642-230	107
642-236	5071A
642-242	123AP
642-246	123AP
642-254	107
642-255	145A
642-260	107
642-261	184
642-264	104
642-266	185
642-268	107
642-269	107
642-270	107
642-271	121MP
642-272	121
642-274	107
642-275	177
642-277	103A
642-279	110MP
642-280	614
642-281	177
642-304	117
642-306	128
642-316	104
642-319	123AP
642AS407G-101	107
642AS4076-101	107
643RIX	193
643RLX	193
644-1	185
647-1	165
647-1(RCA)	165
648-1(RCA)	187
649-1	165
649-1(RCA)	165
650	109
650-105	102
650-106	102
650-107	102
650-108	102
650-109	103
650-110	116
650C0	5006A
650C1	5007A
650C2	5007A
650C5	5008A
650C6	5008A
651	5009A
651-001D	109
651-020A	109
651-1(RCA)	395
651C0	5009A
651C1	5009A
651C2	5009A
651C3	5009A
651C4	5010A
651C5	5010A
651C6	5010A
651C7	5010A
651C8	5010A
651C9	5011A
651N001D	109
651N-016A	519
652	5012A
652(ITT)	2011
652-005B	116
652-1(RCA)	229
652-615A	116
652-616A	552
652-620A	552
652-6208	552
652C0	136A
652C1	5011A
652C2	5011A
652C3	5012A
652C4	5012A
652C5	5012A
652C6	5012A
652C7	137A
652C8	5013A
653-020A	30001
653-202	108
653C1	5014A
653C2	5014A
653C3	5014A
653C4	5014A
653C6	5015A
653C7	5015A
653C9	5016A
654(ITT)	2012
654-1	312
654-1(RCA)	229
654-202B	5014A
654C9	5018A
654N214A	5010T1
654N224A	5014A
654N417A	177
654N418A	611
655C9	5019A
656(ITT)	2013
656-1	171
656-1(RCA)	373
656-2	182
656-2(RCA)	373
656-4	154
656-4(RCA)	373
656-136	102A
656-137	102A
656-138	158
656-139	102A
656-141	116
656-142	109
657-1(RCA)	229
657-31	161
658(ITT)	2014
660-125	128
660-126	123AP
660-127	108
660-128	128
660-131	123AP
660-134	123
660-145	128
660-220	123AP
660-221	123AP
660-222	123AP
660-224	158
660-225	123AP
660-227	102A
660-228	103A
660-230	116
660B	102
661-030A	288
661-030B	288
661-029A	85
661-029B	287
661-029C	287
661-029D	287
661N026A	288
662N011J	287
662N011K	287
662N012J	288
662N012K	288
662N013B	229
662N031B	229
662N031C	229
664-408B	289A
664N418A	197
664N419A	85
664N419B	85
664N426A	199
664N-418A	197
664N-610A	234
665-1A5L	160
665-2(RCA)	130
665-2A5L	103A
665-4A5L	101
665-802C	152
665-812A	85
665-812B	85
665-814B	85
665-815B	290A
665-816A	199
665-816B	199
665-819B	229
665-820A	85
665-821A	375
665-830A	289A
665-830B	289A
665-834A	399
665-857Y	398
665A-1-5L	160
665B-1-5L	126
665C-1-5L	121
666-1	106
666-1(RCA)	128
666-1-A-5L	102A
666-2-A-5L	102A
666-3A-5L	102A
668-137B	1187
668-138A	1187
668-139A	712
668-140A	712
668-141A	712
668-142A	712
668-144A	615P
668CS	108
668N045A	1003
668ST-2SD819	389
669	159
669-1	163A
669-1(RCA)	165
669-2(RCA)	165
669A459H01	910D
669A464H01	9932
669A471H01	7472
669A492H01	9962
671A290H01	9930
671A291H01	9944
671A292H01	9945
671A293H01	9946
674-3A5L	100
675-153	158
675-154	102A
675-155	102A
675-156	102A
675-158	109
675-206	131MP
676-1	233
676-1(RCA)	229
677-1(RCA)	780
677-2(RCA)	780
677-3(RCA)	780
677A-1-5L	105
677B-1-5L	121MP
677C-1-5L	121MP
679-1(RCA)	194
679-10	823
680-1	161
680-1(RCA)	161
680-1(TRANS)	161
680-2(RCA)	319P
680PC	9680
681-1(RCA)	152
682-1(RCA)	185
683-21(RCA)	130
684-652423-1	116
684A-1-5L	121
686-0012	128
686-0130	128
686-0210	175
686-0210-0	175
686-0112	128
686-0165	128
686-0243	130
686-0243-0	130
686-0325-0	159
686-1(RCA)	222
686-143	130
686-143A	130
686-229-0	128
686-257-0	199
686-2700	159
687-1	191
687-1(RCA)	191
688-1(RCA)	5404
688B-1-5L	160
688C-1-5L	100
690C092H88	116
690L270H02	121
690L297H01	160
690L297H02	121
690L-021H25	152
690L-021H26	153
690V010H40	161
690V010H41	108
690V010H42	126
690V010H43	614
690V040H56	160
690V040H57	126
690V040H58	126
690V040H59	126
690V040H60	126
690V040H61	102
690V040H62	102
690V040H63	109
690V060H58	108
690V060H59	108
690V070H49	108
690V070H98	108
690V080H36	161
690V080H37	126
690V080H38	154
690V080H39	102
690V080H40	126
690V080H41	123
690V080H42	127
690V080H43	127
690V080H44	102
690V080H45	163A
690V080H47	116
690V080H49	506
690V080H50	506
690V080H51	506
690V080H52	116
690V080H53	167
690V080H54	156
690V080H91	116
690V0103H27	123AP
690V02H69	108
690V08H36	123AP
690V028H28	108
690V028H48	108
690V028H49	112
690V028H69	108
690V028H89	108
690V031H33	116
690V034H29	126
690V034H30	102A
690V034H31	102A
690V034H32	109
690V034H39	102
690V034H74	109
690V037H91	109
690V037H92	120
690V038H22	156
690V038H23	113A
690V039H18	118
690V039H22	156
690V039H52	116
690V039H54	120
690V041H08	116
690V043H62	158
690V043H63	158
690V047H54	126
690V047H55	126
690V047H56	100
690V047H57	100
690V047H58	102
690V047H59	102A
690V047H60	102
690V047H61	109
690V047H97	123AP
690V049H81	108
690V052H23	102
690V052H24	102
690V052H50	109
690V052H63	160
690V052H68	109
690V053H57	116
690V054H20	102A
690V054H21	102
690V056H27	160
690V056H29	160
690V056H30	160
690V056H31	160
690V056H32	160
690V056H33	102A
690V056H34	102A
690V056H89	126
690V056H90	102
690V057H25	160
690V057H27	102
690V057H28	102
690V057H59	126
690V057H62	126
690V059H20	102A
690V059H21	158
690V059H52	102A
690V059H55	102A
690V059H63	109
690V061H98	102
690V061H99	102
690V062H47	102A
690V063H14	126
690V063H15	126
690V063H16	102
690V063H17	102
690V063H50	102A
690V063H51	102
690V066H44	126
690V066H45	126
690V066H46	102
690V066H47	102
690V066H48	109
690V066H49	126
690V066H89	160
690V067H09	109
690V067H35	103A
690V068H29	126
690V068H30	102
690V068H31	102
690V068H32	109
690V069H39	116
690V073H59	126
690V073H60	109
690V073H61	614
690V073H85	126
690V075H62	128
690V075H68	108
690V077H34	126
690V077H35	126
690V077H36	126
690V077H37	102
690V077H73	102A
690V081H07	108
690V081H08	160
690V081H09	121
690V081H40	166
690V081H91	506
690V081H92	145A
690V081H96	103A
690V081H97	104
690V082H40	116
690V082H47	158
690V083H89	109
690V084H60	126
690V084H61	102A
690V084H62	123AP
690V084H63	102A
690V084H94	108
690V084H95	108
690V084H96	108
690V085	158
690V085H42	126
690V085H44	158
690V086H39	102
690V086H51	123AP
690V086H52	108
690V086H86	159
690V086H87	108
690V086H88	123AP
690V086H89	129
690V086H90	128
690V086H91	116
690V086H92	116
690V086H94	161
690V086H95	161
690V086H96	108
690V088H20	177
690V088H44	108
690V088H45	108
690V088H46	107
690V088H47	107
690V088H48	108
690V088H49	107
690V088H50	123AP
690V088H51	123AP
690V088H52	102A
690V089H46	107
690V089H86	107
690V089H89	123AP
690V089H90	102A
690V089H91	116
690V092H52	123AP
690V092H54	123AP
690V092H81	123AP
690V092H84	123AP
690V092H85	109
690V092H88	117
690V092H96	123AP
690V092H97	123AP
690V094H17	130
690V094H18	102A
690V094H19	102A
690V094H20	102A
690V094H21	123AP
690V094H35	116
690V097H59	102A
690V097H62	123AP
690V098H48	123AP
690V098H49	123AP
690V098H50	123AP
690V098H51	131
690V098H52	109
690V098H53	116
690V099H59	158
690V099H79	123AP
690V099H80(NPN)	103A
690V099H80(PNP)	102A
690V06199	100
690V68H32	109
690V73H60	109
690V102H39	103A
690V102H40	177
690V102H71	123AP
690V102H72	614
690V102H96	126
690V103H23	108
690V103H24	108
690V103H25	108
690V103H26	108
690V103H27	108
690V103H28	107
690V103H29	123AP
690V103H30	128
690V103H31	123AP
690V103H32	123AP
690V103H33	123AP
690V103H53	142A
690V103H54	109
690V104H53	102A
690V104H54	102A
690V105H19	123AP
690V105H21	160
690V105H22	123AP
690V105H24	102
690V105H25	123AP
690V105H26	160
690V105H27	123AP
690V105H28	123AP
690V105H29	123AP
690V105H30	614
690V105H31	116
690V105H32	139A
690V105H-21	160
690V105H-22	123AP
690V105H-24	126
690V105H-25	123AP
690V109H44	116
690V109H46	107
690V109H72	614
690V110H30	108
690V110H31	108
690V110H32	108
690V110H33	108
690V110H34	128
690V110H36	128
690V110H55	129
690V110H88	109
690V110H89	186
690V111H63	614
690V114H29	108
690V114H30	123AP
690V114H31	108
690V114H33	123AP
690V114H36	116
690V116H19	108
690V116H20	107
690V116H21	123AP
690V116H22	133
690V116H23	159
690V116H24	128
690V116H25	185
690V116H26	184
690V116H40	142A
690V116H41	116
690V118H57	177
690V118H58	116
690V118H59	108
690V118H60	159
690V118H61	159
690V118H62	102A
690V119H13	614
690V119H14	116
690V119H15	177
690V119H54	158
690V119H94	126
690V119H95	160
690V119H96	160
690V119H97	160
690V120H89	123AP
690V037H91	109
691C844	128
692-0020-00	9989
692-0016-00	9924
693EP	123AP
693FS	123AP
693G	123AP
693GT	123AP
693GV	199
694-1(RCA)	222
694D	123AP
694E	123AP
698V102H39	103
699	159
699 (PNP)	159
699(ZENITH)	159
700-04	133
700-110	128
700-113	130
700-133	159
700-134	123AP
700-135	123AP
700-136	129
700-137	116
700-154	123AP
700-155	289
700-156	123AP
700-159	139A
700-224	175
700-321	5066A
700-325	123AP
700-848A	908
700A858-285	116
700A858-286	116
700A858-318	123AP
700A858-319	199
700A858-322	177
700A858-328	123AP
700A-858-318	199
700A-858-328	199
700PK50	5598
700PK60	5598
700PK80	5599
700PK100	5599
700PK120	5599
702-0002	107
702-810	113A
703 056 (4)	123AP
703(EPOXY)	703
703(METAL)	703
703-056(4)	123AP
703-1	128
703-2	128
703B	128
703HC	703
705-600007	5633
707	241
707W00160	5010A
707W00273	519
707W02315	142A
709CE	909
709DC	909D
709HC	909
709PC	909D
710	116
710CE	910
710DC	910D
710HC	910
710PC	910D
711HC	911
715EN	123AP
715FB	107
715HC	915
720-33	152
720-35019	102
720-35019A	102A
720DC	744
720PC	744
720SDC	744
720SPC	744
723BE	923
723C	923D
723CE	923
723DC	923D
723HC	923
723PC	923D
724C	289A
724D	289A
725-008	726
725EHC	925
725HC	925
729-3	128
732TM-GR	199
733-0100-699	187
733-0	199
733W00050	9963
733W00030	9093
733W00109	74161
733W000127	7438
733W00320	74H11
733W00021	941M
733W00022	74141
733W00024	9930
733W00025	9932
733W00026	9933
733W00027	9936
733W00028	9946
733W00029	9962
733W00035	941D
733W00039	7490
733W00042	7400
733W00043	7420
733W00048	9937

PART NUMBER	NTE REPLACEMENT
733W00049	9949
733W00350	74182
733W00064	7404
733W00065	7410
733W00067	7474
733W00068	7486
733W00124	7408
733W00126	7432
733W00127	7438
733W00133	7493A
733W00135	74164
733W00162	7402
733W00163	74151
733W00191	74155
733W02240	3881
733W00317	74H74
733W00323	74153
733W00329	74367
733W00332	74H51
733W00333	74H40
733W00339	7414
733W01610	8216
733W01930	74LS193
733W01513	2117
733W01753	74LS20
733W01913	74151
733W01931	74LS242
733W01933	74LS293
733W02239	3880
733W02241	3882
734EU	132
735W00814	661
737	123AP
737(ZENITH)	123AP
739	725
739DC	725
739H01	123AP
739PC	725
740-937-120	1087
740-2001-110	1014
740-2001-306	1029
740-2001-307	722
740-2002-111	708
740-2007-120	1087
740-5853-300	1005
740-5903-301	1006
740-8120-160	1005
740-8160-190	1003
740-9000-017	1047
740-9000-554	1142
740-9000-566	1052
740-9000-754	1142
740-9003-301	1006
740-9003-350	1217
740-9007-046	1108
740-9007-205	1155
740-9037-120	1087
740-9607-205	1155
740HC	940
741	941M
741C(IC)	941M
741CP	941M
741DC	941D
741HC	941
741PC	941D
741TC	941M
742	107
742-1	188
742C2030-020	130
743	154
744	128
745-0004	3051
745-0006	3050
745-0014	3061
745-0016	3057
746-1407	152
747HC	947
748	123AP
748(ZENITH)	123AP
748HC	1171
749	949
749(BENDIX)	949
749-8160-190	1003
749DHC	949
750-045	175
750-137	102
750-138	102
750-139	102
750-140	102
750-141	116
750-35019	102A
750A858-285	116
750A858-319	123AP
750A858-328	199
750A858-448	152
750C838-123	123AP
750C838-124	123AP
750C838-125	123AP
750C871-1	HVD-1
750C871-2	HVD-1
750C871-3	HVD-1
750C871-4	HVD-1
750C871-5	HVD-1
750C871-6	HVD-1
750C871-7	HVD-1
750C871-8	HVD-1
750D858-211	125
750D858-212	123AP
750D858-213	108
750M63-104	160
750M63-105	158
750M63-115	102A
750M63-116	160
750M63-117	160
750M63-119	123AP
750M63-120	123AP
750M63-121(NPN)	103A
750M63-121(PNP)	102A
750M63-122(NPN)	103A
750M63-122(PNP)	102A
750M63-146	123AP
750M63-147	158
750M63-148	158
750M63-149	116
751-2001-212	116
751-6300-001	116
751-9001-124	116
753-0100-699	187
753-0101-047	108
753-0101-226	186
753-0160-699	187
753-1303-801	229
753-1372-100	229
753-1644-100	199
753-1828-001	123AP
753-2000-003	123AP
753-2000-004	123AP
753-2000-006	175
753-2000-007	229
753-2000-008	123AP
753-2000-009	123AP
753-2000-011	123AP
753-2000-100	199
753-2000-101	159
753-2000-107	128
753-2000-460	107
753-2000-463	131MP
753-2000-535	229
753-2000-710	108
753-2000-711	123AP
753-2000-735	123AP
753-2000-870	123AP
753-2000-871	123AP
753-2001-173	152
753-2100-001	123AP
753-2100-002	131
753-2100-008	123AP
753-3000-535	229
753-4000-010	199
753-4000-011	123AP
753-4000-024	133
753-4000-025	132
753-4000-101	123AP
753-4000-537	123AP
753-4000-668	107
753-4000-929	107
753-4001-474	131
753-4001-931	184
753-4001-932	152
753-4004-248	159
753-5751-359	107
753-5851-359	107
753-6000-002	199
753-6000-019	132
753-8400-230	199
753-8500-380	199
753-8510-470	128
753-9000-019	132
753-9000-096	186
753-9000-839	199
753-9000-922	107
753-9001-674	229
753-9001-675	229
753-9010-021	6400
753-9010-235	152
753-9020-784	161
753-9050-785	161
753-5751359	229
753TC	736
754-0102-139	614
754-900-124	116
754-1003-030	109
754-2000-001	177
754-2000-002	116
754-2000-005	116
754-2000-009	109
754-2000-011	177
754-2009-150	177
754-2509-150	177
754-2720-021	177
754-4000-088	109
754-4000-188	109
754-4000-410	109
754-4000-553	614
754-5000-021	116
754-5700-282	5072A
754-5710-219	5072A
754-5750-282	5072A
754-5750-283	177
754-5750-284	116
754-5850-284	5072A
754-5900-090	109
754-8130-140	614
754-9000-082	5072A
754-9000-351	614
754-9000-460	109
754-9000-473	177
754-9000-953	116
754-9001-124	116
754-9002-687	614
754-9030-009	5073A
754-9052-473	177
754-9053-090	139A
755-422494	159
755-845049	519
756	116
758DC	743
758PC	743
762-1(RCA)	230
762-2	231
762-2(RCA)	231
762-105-00	129
762-110	234
762-120	129
763-1	128
767	123AP
767(ZENITH)	123AP
767CL	123AP
767DC	722
767PC	722
768	5521
770-045	152
772-101-00	199
772-110	123AP
772-120-00	128
772-121-00	128
772-724	102
772A	107
772B	107
772B1	107
772BJ	107
772BL	107
772BM	107
772BN	107
772BY	107
772C	107
772CC	107
772D	107
772D1	107
772DC	107
772DG	107
772E	107
772EH	107
772F	107
772FE	107
772G	107
773	123AP
773(ZENITH)	123AP
773CL	128
773RED	108
774	106
774(ZENITH)	159
774CL	129
774ORN	108
775-1	172A
775-1(SYLVANIA)	172A
775BRN	108
776-1	129
776-1(SYLVANIA)	159
776-2	129
776-2(PHILCO)	123AP
776-151	123AP
776-183	123AP
776GRN	123AP
776Y	224
777-2	552
778-1(RCA)	5641
778-2(RCA)	5641
779BLU	108
780-1(RCA)	5511
780-6	230
780DC	714
780PC	714
780WHT	123AP
781-2(RCA)	5401
783RED	108
784ORN	108
785YEL	123AP
786	108
787BLU	108
787PC	797
791	123AP
792-238	116
792-286	102
792-287	102
792-288	102
792-289	102
792-290	102
792-292	109
792-414	552
800-01400	116
800-000-025	500A
800-01300-504	116
800-001-031-1	159
800-001-034	123AP
800-001-106-1	128
800-003-00	109
800-003-07(NPN)	103A
800-003-07(PNP)	102A
800-004-00	142A
800-005-00	109
800-006-00	116
800-007-00	113A
800-008-00	120
800-010-00	156
800-0016	7416
800-020-00	109
800-030-00	5071A
800-040-00	177
800-050-00	156
800-012-00	118
800-013-00	116
800-014-00	116
800-014-01	116
800-016-00	177
800-017-00	116
800-018-00	156
800-018-02	156
800-021-00	177
800-022-00	109
800-023-00	142A
800-024-00	116
800-028-00	5075A
800-029-30	506
800-032-00	116
800-034-00	5120A
800-035-00	142A
800-036-00	177
800-037-00	156
800-038-00	116
800-039-00	109
800-041-00	116
800-042-00	177
800-043-00	156
800-046-00	116
800-051-00	156
800-101-101-1	123AP
800-101-101-2	128
800-101-102-1	123AP
800-101-108-1	159
800-101-114-1	129
800-102-001	519
800-102-101-1	519
800-122	124
800-158	124
800-172	124
800-180	124
800-181	124
800-196	104MP
800-203	124
800-204	124
800-205	158
800-219(NPN)	103A
800-219(PNP)	102A
800-245(NPN)	128
800-245(PNP)	129
800-250-102	123
800-253	121MP
800-256	124
800-256(METAL)	124
800-256(PLASTIC)	157
800-270(NPN)	103A
800-270(PNP)	102A
800-282	506
800-284	129
800-289(NPN)	184
800-289(PNP)	185
800-294(NPN)	128
800-294(PNP)	129
800-305(NPN)	128
800-305(PNP)	129
800-310(NPN)	103A
800-310(PNP)	102A
800-315(NPN)	128
800-315(PNP)	129
800-321	124
800-328(NPN	128
800-328(PNP)	129
800-329	104
800-362(NPN)	152
800-362(PNP)	153
800-366(NPN)	152
800-366(PNP)	153
800-401	124
800-501-00	123AP
800-501-01	123AP
800-501-02	123AP
800-501-03	123AP
800-501-04	123AP
800-501-11	123AP
800-501-22	123AP
800-502-00	102A
800-503-00(NPN)	103A
800-503-00(PNP)	102A
800-504-00	160
800-505-00	102A
800-506-00	103A
800-507-00	121
800-508-00	123AP
800-509-00	123AP
800-510-00	130
800-510-01	130
800-511-00	129
800-512-00	128
800-513-00	128
800-514-00	123AP
800-515-00	128
800-516-00	129
800-517-00	109
800-518-00	121
800-521-01	123AP
800-521-02	128
800-521-02(PENNCREST)	188
800-521-03	128
800-522-01	123AP
800-522-02	123AP
800-522-02(PENNCREST)	188
800-522-03	128
800-522-04	123AP
800-523-01	159
800-523-02	159
800-523-02(PENNCREST)	189
800-524-02	130
800-524-02A	130
800-524-03	130
800-524-03A	130
800-524-04A	130
800-525-03	129
800-525-04	159
800-525-04A	130
800-526-00	123AP
800-527-00	159
800-528	103A
800-528-00	103A
800-529-00	123AP
800-530-00	123AP
800-530-01	123AP
800-533-00	152
800-533-01	184
800-534-00	123AP
800-534-00(DIODE)	614
800-534-00(TRANS)	123AP
800-534-01	123AP
800-535-00	132
800-535-01	132
800-536-00	108
800-537-01	103A
800-537-02	130MP
800-537-03	158
800-538-00	123AP
800-544-00	123AP
800-544-00(UJT)	6400
800-544-10	123AP
800-544-20	123AP
800-544-30	123AP
800-546-00	152
800-547-00	159
800-548-00	123AP
800-550-00	123AP
800-550-10	163A
800-552-00	191
800-557-00	161
800-616	HVD-3
800-669B	128
800-669B(NPN)	293
800-669B(PNP)	294
800-670B(NPN)	297
800-670B(PNP)	298
800-672(NPN)	293
800-672(PNP)	294
800-791	521
800-818(NPN)	287
800-818(PNP)	287
800-50100	123AP
800-50300	103A
800-50400	160
800-50500	126
800-50600	103A
800-50700	121
800-51500	123AP
800-51600	129
800-52102	123AP
800-52202	123AP
800-52302	123AP
800-52402	130
800-52600	123AP
800-52700	129
800-52800	103A
800-53001	123
800-53300	128
800-53400	123AP
800-53600	108
800-53702	130MP
800HB1U	5346
800HB2U	5346
800HB3U	5346
800HB4U	5346
800HB6U	5346
801-05300	126
801-05200	126
801-04900	126
801B	123AP
802-05400	102A
802-05600	102A
802-0027	74LS27
802-0038	74LS38
802-0260	74LS260
802-0245	74LS245
802-0266	74LS266
802-22631U	102A
802-36400	102A
802-36430	102A
802-43900	102A
803-0073	4073B
803-18250	123AP
803-37390	123AP
803-38030	108
803-38040	108
803-39430	108
803-39440	108
803-83840	108
803-83930	108
803-83940	123AP
803-89910	123AP
803-89930	123AP
804	123AP
804-28	435K28
804-30	435K30
804-42	435K42
804-64	435K64
804-14120	130
804-14130	130
804-21980	123AP
804A765-2	5809
805-1060	109
805-10600	109
805C/3772A	289A
807-1	128
807-1(PHILCO)	194
808-206	116
808-304	102A
808-305	102A
808-306	102A
808-307	102A
808-308	102A
808-309	103A
808-310	102A
808-311	102A
808-312	109
809-334B	123AP
810	788
812(RECT)	116
815-003	5527
815-181D	102
815-1810	102A
817-275	175
818WHT	123AP
819	108
819-1	128
822	123AP
822-1	116
822-1(SYLVANIA)	161
822-2	116
822-3	116
822-4	116
822-5	116
822-334A	123AP
822A	123AP
822ABLU	123AP
822B	123AP
823B	123AP
823WHT	123AP
824-09501	123AP
824-1	128
824-1(SILVANIA)	319P
824-1(SYLVANIA)	161
824-10300	129
826	152
826-1	159
827BRN	123AP
828GRN	123AP
828S	123AP
829	159
829-501(RCA)	189
829-502(RCA)	189
829-503(RCA)	188
829-504(RCA)	188
829A	288
829B	159
829C	159
829D	159
829DE	159
829E	159
829F	159
830	102A
831-740B	123AP
833	159
834-250-011	152
834-6066	123AP
835-300-0002	5547
847BLK	123AP
850PK50	5598
850PK60	5598
850PK80	5599
850PK100	5599
850PK120	5599
851-0372-130	116
852-92-43	185
853-0300-632	123AP
853-0300-634	187
853-0300-643	193
853-0300-644	199
853-0300-900	123AP
853-0300-923	123AP
853-0301-096	186
853-0301-317	289
853-0373-110	123AP
854-0372-020	116
858	199
858GS	123AP
859GK	199
860-022-01	181
863-254B	177
863-567B	177
863-776B	177
864-2305	152
866-6	130
866-6(BENDIX)	130
880-101-00	703
880-102-00	726
880-207-000	116
880-250-001	121
880-250-010	121
880-250-011	184
880-250-102	123AP
880-250-107	129
880-250-108	123AP
880-250-109	123AP
880-250108	199
881-250-102	123AP
881-250-107	129
881-250-108	123AP
881-250-109	123AP
881-250108	199
884-250-001	121
884-250-010	121
884-250-011	184
895	123AP
901-000-6-51	158
901-5553-7	614
902-000-2-04	123AP
902-000-8-04	123AP
902-001-7-18	229
902-002-3-06	199
902-003-0-012	229
902-003-0-12	229
902-003-3-17	199
902-003-6-006	199
902-003-6-06	199
903	161
903-00430	177
903-00350	177
903-00390	109
903-00347	125
903-00364	142A
903-00379	156
903-00381	5812
903-00382	116
903-00383	144A
903-00384	177
903-00391	610
903-00393	177
903-00394	116
903-00418	109
903-00429	116
903-00464	605A
903-1B	614
903-3	123AP
903-3G	123AP
903-8B	110MP
903-9B	109
903-10B	109
903-12B	109
903-13B	117
903-14B	116
903-15B	116
903-16B	109
903-17	156
903-17A	156
903-17B	156
903-17C	156
903-18	109
903-18B	109
903-19B	614
903-20	177
903-23	109
903-23A	109
903-23B	109
903-23C	109
903-23D	109
903-23E	109
903-25B	177
903-26B	134A
903-27	109
903-27B	109
903-28B	116
903-29B	109
903-30B	109
903-32	116
903-34	109
903-34#	109
903-34A	109
903-34B	109
903-34C	109
903-34D	109
903-34E	109
903-35B	125
903-36	125
903-36A	125
903-36B	125
903-36C	125
903-36D	125
903-36F	125
903-37B	109
903-39	116
903-40	109
903-41B	177
903-42B	177
903-43B	109
903-45B	109
903-46	116
903-47	612
903-47B	612
903-48B	177
903-49	116
903-49B	116
903-50	116
903-51	109
903-51-B	109
903-51B	109
903-52B	116
903-54B	109
903-58	177
903-58B	177
903-59	116
903-65	109
903-65B	109
903-67	610
903-67B	614
903-68	116
903-68B	506
903-69B	116
903-71B	614
903-72B	177
903-73	116
903-73B	5022A
903-79B	116
903-80B	614
903-82	177
903-82B	177
903-83B	109
903-84B	177
903-85B	614
903-91	116
903-92B	109
903-95B	177
903-96B	614
903-97B	142A
903-99	610
903-99B	614
903-100B	177
903-101B	614
903-102	116
903-103B	109
903-104B	116
903-105B	116
903-108	109
903-108B	109

PART NUMBER	NTE REPLACEMENT
903-109	116
903-110B	614
903-112B	177
903-113B	109
903-114B	109
903-115B	109
903-116B	177
903-117	116
903-117B	116
903-118	177
903-118B	177
903-119	139A
903-119B	139A
903-120B	136A
903-121	177
903-121B	177
903-123B	614
903-125	116
903-129	116
903-133	177
903-137B	610
903-141B	614
903-146	116
903-149	116
903-154	116
903-156	116
903-156B	116
903-157	116
903-163	614
903-163B	614
903-164	116
903-164B	116
903-166B	5071A
903-167B	110MP
903-168B	109
903-169B	116
903-171B	614
903-177B	177
903-178	177
903-179	139A
903-180	5071A
903-197	116
903-198	116
903-208	5304
903-212	109
903-303	116
903-311	177
903-330	116
903-332	177
903-333	136A
903-334	156
903-335	5071A
903-337	140A
903-339	519
903-341	109
903-344	5081A
903-350	109
903-384	519
903-412	156
903-420	143A
903-435	110MP
903-436	519
903-438	116
903-439	519
903-440B	614
903-442	519
903-448	5013A
903-451	5313
903-456	5022A
903-457	116
903-458	5023A
903-463	177
903-479	5022A
903-480	5007A
903-481	5010A
903-483	615P
903-486	519
903-487	5015A
903-495	5016A
903-497	5009A
903-498	5012A
903-499	5018A
903-507	109
903-508	177
903-509	5018A
903-510	558
903-511	5100A
903-512	558
903-513	5010A
903-515	110MP
903-517	116(2)
903-518	519
903-528	519
903-556	109
903-557	177
903-559	5070A
903-560	5070A
903-561	156
903-562	116
903-734	519
903-864	177
903-885	615P
903-976	177
903-1206	5010A
903-1207	5010A
903-1214	5010A
903Y00212	117
903Y002149	123AP
903Y002150	199
903Y002151	187
903Y002152	186
903Y00228	139A
903Y-002151	189
904	161
904-95	123AP
904-95A	123AP
904-95B	199
904-96B	123AP
904-97B	109
904A	161
905	161
905-00066	2060
905-00135	1226
905-00143	788
905-00155	1214
905-00161	2060
905-5	1024
905-24B	722
905-30B	1003
905-38B	722
905-39B	1075A
905-46B	722
905-101	1582
905-102	7490
905-105	1004
905-106	1308
905-109	1596
905-120	788
905-125	4001B
905-126	4011B
905-128	2001
905-131	2004
905-165	1245
905-168	1226
905-177	1087
905-186	4013B
905-189	1306
905-190	615P
905-191	1004
905-198	1581
905-200	4027B
905-201	1087
905-204	2060
905-210	2060
905-218	4029B
905-219	977
905-220	4081B
905-223	1308
905-229	2003
905-233	74C04
905-234	1308
905-238	929
905-239	937M
905-241	4528B
905-242	966
905-243	853
905-244	1115A
905-255	778A
905-256	1581
905-260	4069
905-262	4520B
905-267	977
905-268	4081B
905-298	1294
905-304	1557
905-347	1558
905-352	1714S
905-368	1471
905-558	1708
905-658	928M
905-659	943M
905-662	4013B
905-717	4013B
905-922	943M
905-1085	943M
905-1106	4001B
905-1126	4066B
905-1227	987
905-1238	928M
905-1239	4013B
905-1896	55
906	272
908D1	109
909(RCA)	107
909-27125-140	123AP
909-27125-160	107
910	161
910X1	158
910X2	158
910X3	102A
910X4	102A
910X5	102A
910X6	102A
910X7	158
910X8	158
910X9	158
910X10	158
911-017499	193
911-031917-001	4516B
912-1A6A	123AP
914-000-2-00	312
914-000-4-00	109
914-000-6-00	177
914-000-7-00	614
914-001-1-00	177
914-001-7-00	109
914A-1-6-5	121
914F298-1	128
916-31001-1	102A
916-31001-1B	102A
916-31001-7B	102A
916-31003-5B	102A
916-31007-5	102A
916-31007-5B	102A
916-31012-6	102A
916-31012-6B	102A
916-31019-3	126
916-31019-3B	126
916-31024-3	123AP
916-31024-3B	107
916-31024-5	107
916-31024-5B	108
916-31025-4	161
916-31025-4B	161
916-31025-5	123AP
916-31025-5B	107
916-31026-8B	123AP
916-31026-9B	102A
916-32000-7	109
916-32003-2	109
916-32006-2	109
916-33003-2	116
917-1201-0	1003
919-005045	5802
919-007109	116
919-007109RA	116
919-003309	5079A
919-003309-1	5077A
919-00-1445	136A
919-00-1445-001	138A
919-00-1445-002	142A
919-00-1445-1	138A
919-00-1445-2	142A
919-00-1449-1	156
919-00-2440-1	116
919-00-2440-2	116
919-00-3309	5079A
919-00-3309-2	5127A
919-00-3309-1	5079A
919-00-3309-3	5131A
919-00-4326	177
919-00-4799	177
919-00-5045	117
919-00-7109	117
919-00-7349	135A
919-00-7394	177
919-00-7766	116
919-00-7776	116
919-00-9929	177
919-010459	156
919-010623	156
919-010829	156
919-010829-1	156
919-010867	109
919-010873	116
919-010873-050	519
919-001172	116
919-001172-1	116
919-011307	116
919-001445-2	142A
919-001449	156
919-001449-1	156
919-001449-3	156
919-002240-1	156
919-002440	156
919-002440-1	156
919-002440-2	156
919-013036	156
919-013044	123A
919-013058	142A
919-013059	177
919-013060	116
919-013061	156
919-013067	177
919-013072	116
919-013079	156
919-013081	116
919-013082	177
919-004326	116
919-004799	116
919-007394	116
919-017406-010	5125A
919-017406-011	5136A
919-017406-013	5130A
919-017406-056	5133A
919-017406-057	5125A
919-007776	116
919-007776RA	117
919-008862	156
919-009459RA	116
919-01-0459	116
919-01-0623	116
919-01-0829	117
919-01-0829-1	117
919-01-0867	109
919-01-0873	177
919-01-1172-1	177
919-01-1211	116
919-01-1212	116
919-01-1213	139A
919-01-1214	5072A
919-01-1215	177
919-01-1307	177
919-01-1339	117
919-01-1340	5127A
919-01-3035	139A
919-01-3058	135A
919-01-3072	177
919-011211	156
919-011212	116
919-011215	116
919-011339	156
919-011340	142A
919-015618-1	5079A
919-72-2	5642
919A03	522
919A04	522
919A05	522
919A08	522
919A09	522
919A11	522
919A12	522
919A13	522
919A14	522
919A16	522
919A17	522
919A18	522
919B01	522
919B03	522
919B07	522
919B08	522
919H01	522
919J01	522
919J02	522
919P01	522
919T01	522
919T02	522
919T03	522
919T04	522
920-029847-000	8212
921-01060	123AP
921-01059	108
921-01063	123AP
921-01065	152
921-01082	123AP
921-01102	159
921-01103	85
921-01104	159
921-01105	123AP
921-01108	222
921-01109	159
921-01130	294
921-00178	159
921-01111	123AP
921-01112	280
921-01113	281
921-01114	382
921-01115	383
921-01122	123A
921-01123	123A
921-01124	123AP
921-01125	294
921-01127	123A
921-01129	172A
921-01131	184
921-01167	85
921-01168	85
921-01176	234
921-01177	123AP
921-01179	123AP
921-01187	123AP
921-1A	160
921-1B	160
921-2A	160
921-2B	160
921-3A	160
921-3B	126
921-4	102A
921-4A	160
921-4B	126
921-5A	103A
921-5B	103A
921-6A	103A
921-6B	103A
921-7	123AP
921-7B	103A
921-8	123AP
921-9	102A
921-9B	160
921-10	160
921-10B	160
921-11B	160
921-12	102A
921-12B	160
921-13	102A
921-13B	160
921-14	102A
921-14B	102A
921-15	160
921-15B	160
921-16	160
921-16B	160
921-17	160
921-17B	160
921-19	160
921-20	108
921-20A	108
921-20B	108
921-20BK	123AP
921-21	108
921-21A	108
921-21B	108
921-21BK	108
921-22	108
921-22A	108
921-22B	108
921-22BG	123AP
921-23	108
921-23A	108
921-23B	108
921-23BK	123AP
921-24	102A
921-24B	102A
921-25B	160
921-26	123AP
921-26A	123AP
921-26B	160
921-27	102A
921-27A	102A
921-27B	123AP
921-28	123AP
921-28A	123AP
921-28B	123AP
921-28BLU	123AP
921-29B	159
921-30	108
921-30A	108
921-30B	108
921-31	108
921-31A	108
921-31B	108
921-32	108
921-32A	108
921-32B	108
921-33	108
921-33B	108
921-34	108
921-34A	108
921-34B	108
921-35	102A
921-35A	102A
921-35B	102A
921-36B	102A
921-37B	102A
921-38	102A
921-38A	102A
921-38B	102A
921-39	102A
921-39A	102A
921-39B	102A
921-40	102A
921-40A	102A
921-40B	102A
921-41B	102A
921-43B	123AP
921-43E	123AP
921-44B	158
921-45	102A
921-45A	102A
921-45B	102A
921-46	123AP
921-46A	123AP
921-46B	103A
921-46BK	123AP
921-47	123AP
921-47A	123AP
921-47B	129
921-47BL	123AP
921-49B	123AP
921-50B	123AP
921-51	102A
921-51B	102A
921-52	102A
921-52B	102A
921-53B	158
921-54B	103A
921-55B	161
921-56B	161
921-57B	161
921-58B	161
921-59B	107
921-60B	128
921-61	124
921-61B	124
921-62	107
921-62A	107
921-62B	107
921-63	107
921-63A	107
921-63B	107
921-64	107
921-64A	107
921-64B	107
921-64C	107
921-65	126
921-65A	126
921-65B	126
921-66	126
921-66A	126
921-66B	126
921-67	102A
921-67A	102A
921-67B	102A
921-68	102A
921-68A	102A
921-68B	102A
921-69	158
921-69A	158
921-69B	158
921-70	159
921-70A	159
921-70B	159
921-71	103A
921-71A	103A
921-71B	103A
921-72B	108
921-73B	123AP
921-77B	123AP
921-81	100
921-84	107
921-84A	107
921-84B	107
921-85	107
921-85A	107
921-85B	107
921-86	107
921-86A	107
921-86B	107
921-88	124
921-88A	124
921-88B	124
921-92B	199
921-93B	123AP
921-97B	108
921-98B	108
921-99B	123AP
921-100B	102A
921-102	107
921-102A	107
921-102B	107
921-103B	106
921-105B	158
921-106B	108
921-109B	123AP
921-110B	129
921-111B	199
921-112B	106
921-114	229
921-114B	199
921-115	161
921-115B	199
921-116	161
921-116B	199
921-117B	123AP
921-118B	158
921-119	108
921-119B	108
921-120B	123AP
921-123B	123AP
921-124B	123AP
921-125B	123AP
921-126B	132
921-127B	123AP
921-128B	123AP
921-129B	108
921-133	199
921-133B	199
921-140B	158
921-141B	107
921-142B	107
921-143B	107
921-145	161
921-145B	107
921-147B	102A
921-148B	102A
921-150B	102A
921-152B	107
921-153B	102A
921-154B	199
921-155B	123AP
921-156B	124
921-157B	220
921-158B	108
921-159B	123AP
921-160B	159
921-161B	123AP
921-163B	186
921-170B	108
921-171B	108
921-172B	108
921-173B	108
921-174B	108
921-176	229
921-176B	107
921-177	108
921-177B	107
921-181B	229
921-182B	129
921-188B	128
921-189B	123AP
921-191B	123AP
921-195B	123AP
921-196	199
921-196B	199
921-197B	159
921-200B	123AP
921-202	123AP
921-202B	199
921-203B	132
921-204B	107
921-205B	199
921-206	199
921-206B	199
921-207B	199
921-208B	199
921-209B	199
921-210B	107
921-211B	107
921-212B	108
921-213B	107
921-214B	123AP
921-215B	123AP
921-216B	102A
921-217B	102A
921-222B	102A
921-223B	102A
921-224B	158
921-225B	123AP
921-226	107
921-226B	107
921-227B	158
921-228B	123AP
921-229B	123AP
921-230B	192
921-231B	132
921-232B	107
921-233B	107
921-234B	123AP
921-235B	107
921-236B	128
921-237B	123AP
921-238B	102A
921-239B	199
921-240B	199
921-241B	128
921-242B	158
921-243B	158
921-244B	158
921-252B	123AP
921-254B	159
921-255B	123AP
921-256X	158
921-257B	107
921-258B	107
921-264B	229
921-265	229
921-265B	229
921-266	108
921-266B	108
921-267	108
921-267B	108
921-268B	123AP
921-269B	123AP
921-270B	129
921-272B	123AP
921-273B	102A
921-274B	102A
921-275	85
921-275B	289
921-275R	123AP
921-276B	123AP
921-281B	199
921-282B	158
921-283	123A
921-288	123A
921-291B	123AP
921-292	159
921-292B	159
921-296B	159
921-301	123AP
921-301B	229
921-303B	123AP
921-304B	123AP
921-305B	123AP
921-306B	123AP
921-307	123AP
921-307B	123AP
921-308	159
921-308B	159
921-309	123AP
921-309B	123AP
921-312B	229
921-313B	108
921-314B	123AP
921-315B	129
921-318B	102A
921-319B	102A
921-325B	108
921-326B	123AP
921-327B	158
921-332B	159
921-333B	106
921-333P	106
921-334B	108
921-335B	108
921-336B	108
921-337B	128
921-338B	108
921-339B	123AP
921-340	128
921-342B	177
921-345B	123AP
921-346	294
921-347	293
921-348B	159
921-349	229
921-349B	229
921-350B	229
921-351	108
921-351B	123AP
921-352B	123AP
921-353	123AP
921-353B	123AP
921-354B	123AP
921-355	123A
921-355B	123AP
921-357B	299
921-360B	123AP
921-369	123AP
921-377	287
921-379	229
921-382	268
921-383	269
921-389	287
921-403	172A
921-404	232
921-405	159
921-407	199
921-408	199
921-410	293
921-424	238
921-428	108
921-430	292
921-431	196
921-432	153
921-433	153
921-434	152
921-449	123AP
921-450	123A
921-462	123A
921-463	123A
921-464	123A
921-467	291
921-470	123A
921-931	152
921-1008-01	384
921-1009	152
921-1010	315
921-1011	130
921-1013	289A
921-1014	161
921-1016	159
921-1017	123AP
921-1018	81
921-1019	133
921-1020	171
921-1021	211
921-1022	199

PART NUMBER	NTE REPLACEMENT
921-1028	85
921-1041	107
921-1042	107
921-1045	123AP
921-1048	123AP
921-1049	123AP
921-1050	85
921-1051	123AP
921-1053	199
921-1054	196
921-1055	199
921-1056	90
921-1057	85
921-1059	108
921-1067	452
921-1152	85
921-1159	222
921-1160	107
921-1161	108
921-1169	152
921-1170	289A
921-1171	290A
921-1172	85
921-1173	222
921-1174	85
921-1175	123AP
921-1193	159
921-1194	159
921-1195	123AP
921-1196	123AP
921-1197	159
921-1198	123AP
921-1200	234
921-1203	306
921-1204	85
921-1205	312
921-1206	133
921-1207	159
921-1209	289A
921-1213	159
921-1214	159
921-1252	85
921-1253	290A
921-1255	312
921-1274	123AP
921-1275	123AP
921-1276	123AP
921-1284	194
921-1285	312
921-1286	229
921-1287	85
921-1288	184
921-1290	188
921-1291	290A
921-1292	85
921-1293	108
921-1295	123AP
921-1300	290A
921-1309	259
921-1310	20
921-1312	293
921-1313	290A
921-1314	85
921-1316	21
921-1325	85
921-1326	159
921-1327	315
921-1335	229
921-1336	229
921-1337	108
921-1338	123AP
921-1339	123AP
921-1340	159
921-1528	107
921-1550	2355
921-1560	19
921-1690	2357
921-1799	2357
921-1801	2358
921-1838	2359
921-1870	2361
921-1874	85
921-1875	2359
921-1878	193A
921-1879	290A
921-1883	2361
921-1884	2361
921-1885	293
921-1888	2361
921-1890	25
921-1891	2362
921-1892	2361
921-1893	289A
921-1897	85
924-2209	172A
924-16598	102A
924-17945	121
926C193-1	123AP
926C193-2	123AP
926C193-P1M4165	123AP
926C206P1	519
929(0)	199
929C	199
929CA	199
929CU	199
929D(JVC)	199
929DX	199
930(0V)	199
930(OV)	199
930B	199
930C	199
930C613-P1	909
930C(WARDS)	199
930D	199
930D(WARDS)	199
930DC	9930
930DU	199
930DX	199
930DZ	107
930E	199
930E(JVC)	199
930E(WARDS)	199
930EX	199
930PC	9930
930X1	123AP
930X2	123AP
930X3	123AP
930X4	108
930X5	108
930X6	126
930X7	102A
930X8	102A
930X9	102A
930X10	102A
931	177
931A02	522
931A04	522
931A05	522
931A06	522
931A07	522
931D01	522
931D02	522
932DC	9932
932PC	9932
933DC	9933
933PC	9933
935-1	123AP
935DC	9935
935PC	9935
936 NPN	184
936(NPN)	184
936-10	116
936-20	116
936DC	9936
936PC	9936
936PNP	185
937DC	9937
937PC	9937
938-3	283
939-12	177
941-026-0001	177
941T1	176
942-002	754
943-086	519
943-087	519
943-087-1	519
943-105-001	519
943-721-001	159
943-728-001	128
943-742-002	199
944DC	9944
944PC	9944
945	6400
945DC	9945
945PC	9945
946-8620-3	116
946DC	9946
946PC	9946
947-1	161
947-1(SYLVANIA)	108
948-10300	5547
948DC	9948
948PC	9948
949DC	9949
949PC	9949
950DC	9950
950PC	9950
951	293
951-1	102
951-1(SYLVANIA)	126
951DC	9951
951PC	9951
952	128
953	128
955-1	160
955-2	160
955-3	160
957-7656-0	5400
958-023	159
961DC	9961
961PC	9961
962DC	9962
962PC	9962
963DC	9963
963PC	9963
964-2073B	123AP
964-2209	172A
964-16598	126
964-16599	104
964-17142	102
964-17443	116
964-17444	123AP
964-17887	104
964-17945	121
964-19862(NPN)	103A
964-19862(PNP)	102A
964-19862A	102A
964-19863	102A
964-19864	102A
964-19865	116
964-20738	123AP
964-20739	129
964-21866	116
964-22008	232
964-22009	172A
964-22158	192
964-24387	128
964-24584	123AP
964-25046	128
964-27986	210
964-174443	116
965-1A6-5	160
965-2A6-1	103A
965-4A6-2	101
965A16-3	160
965B16-2	126
965C-16-4	121
965T1	102
966-03(ZENITH)	152
966-1A6-3	102A
966-2A6-4	102A
966-3A6C	102A
972-659E-0	129
972-659E-0	288
972D7	116
972X1	160
972X2	160
972X3	160
972X4	160
972X5	160
972X6	126
972X7	126
972X8	126
972X9	102A
972X10	102A
972X11	102A
972X12	102A
974-1(SYLVANIA)	161
974-2	171
974-2(SYLVANIA)	157
974-3	157
974-3A6-3	100
974-4	171
974-4(SYLVANIA)	157
975	123AP
975-1	454
975-1(RCA)	454
976-0036-921	177
977-1	177
977-2	116
977-2B	116
977-3B	125
977-4	116
977-4B	166
977-5	116
977-6B	166
977-8	116
977-8B	116
977-9	116
977-10	116
977-10B	116
977-11	116
977-11B	116
977-12	116
977-13	116
977-13B	116
977-14B	113A
977-16	116
977-17	116
977-18	116
977-18B	116
977-19	116
977-19B	116
977-20	116
977-20B	116
977-22	116
977-22B	116
977-23	116
977-23B	116
977-24B	166
977-25B	116
977-26	116
977-27B	116
977-28	116
977-28B	116
977-30	118
977-31	521
977-32	521
977-33	521
977-34	192
977-34-01	523
977-35	523
977-35-02	523
977-35-03	192
977-38	522
977-218	116
977-64197	197
977A1-6-1	105
977B1-6-2	121MP
977C1-6-3	121MP
978-1923	129
979-1(RCA)	161
979-2	108
979-2(RCA)	108
984A-1-6B	121
986	159
986M	159
987T1	102
988T1	102
989T1	102
990T1	102
991-015000	187
991-015001	186
991-010098	159
991-003304	123AP
991-00-1172	177
991-00-1172-1	177
991-00-1219	123AP
991-00-1221	102A
991-00-1222	102A
991-00-1449	117
991-00-1449-1	117
991-00-2232	123AP
991-00-2248	123AP
991-00-2298	123AP
991-00-2356	123AP
991-00-2356/K	123AP
991-00-2440	117
991-00-2440-1	117
991-00-2440-2	117
991-00-2873	123AP
991-00-2888	128
991-00-3144	123AP
991-00-3304	123AP
991-00-7394	116
991-00-7776	116
991-00-8393	123AP
991-00-8393A	123AP
991-00-8393M	123AP
991-00-8394	123AP
991-00-8394A	123AP
991-00-8394AH	123AP
991-00-8395	123AP
991-030236-000	74LS138
991-030244-000	74LS74A
991-030253-000	74LS155
991-020425-0	291
991-020426-0	292
991-020427	194
991-010461	172A
991-010462	123AP
991-030720-000	74LS27
991-030721-000	74LS32
991-031060-000	74LS244
991-031061-000	4053B
991-031063-000	74LS240
991-011305	154
991-011306	123A
991-011705	199
991-011706	457
991-002232	199
991-002298	199
991-002356	199
991-002873	199
991-002888	194
991-013044	199
991-013055	133
991-013056	199
991-013057	199
991-013058	159
991-013063	184
991-013068	199
991-003144	192A
991-015062	211
991-015063	210
991-026054	199
991-018047	47
991-008393	123AP
991-008394	85
991-008394A	85
991-01-0098	159
991-01-0099	121
991-01-0461	172A
991-01-0462	159
991-01-1216	121
991-01-1217	158
991-01-1219	123AP
991-01-1220	123AP
991-01-1221	102A
991-01-1222	102A
991-01-1223	102A
991-01-1224	102A
991-01-1225	159
991-01-1305	128
991-01-1306	123AP
991-01-1312	123AP
991-01-1314	128
991-01-1315	129
991-01-1316	107
991-01-1317	130
991-01-1318	123AP
991-01-1319	159
991-01-1705	123AP
991-01-1706	133
991-01-2328	159
991-01-2686	129
991-01-3044	123AP
991-01-3055	133
991-01-3056	123AP
991-01-3057	123AP
991-01-3058	159
991-01-3063	130
991-01-3068	123AP
991-01-3170	196
991-01-3543	172A
991-01-3544	123AP
991-01-3599	159
991-01-3683	123AP
991-01-3740	123AP
991-01-5000	197
991-01-5001	196
991-01-5062	197
991-01-5063	196
991-011217	158
991-011219	123A
991-011220	123A
991-011221	102A
991-011222	102A
991-011223	102A
991-011224	102A
991-011225	159
991-011312	123AP
991-011313	123A
991-011314	128
991-011315	129
991-011316	123AP
991-011318	123AP
991-011319	159
991-011576	457
991-012328	234
991-012396	123AP
991-012637	102A
991-012685	128
991-012686	85
991-013170	152
991-013186	287
991-013316	123AP
991-013543	172A
991-013544	199
991-01356	199
991-013599	159
991-013740	199
991-015316	6402
991-015535	123AP
991-015556	194
991-015587	85
991-015614	159
991-015615	128
991-015663	172A
991-015942	754
991-016199	123AP
991-016247	199
991-016274	123AP
991-016614	85
991-0166669	180
991-016727	232
991-016788	85
991-017456	457
991-017499	193
991-017688	123AP
991-018238	123AP
991-018493	232
991-021444-002	902
991-021450	184
991-021450-0	184
991-021494	377
991-022774-0	467
991-024253	994M
991-026315	289A
991-026315-0	289A
991-026617	172A
991-027359-002	4069
991-028658-000	4025B
991-029853-000	74150
991-029854-000	74LS00
991-029855-000	74LS02
991-029858	74LS10
991-029859-000	4511B
991-029860-000	74121
991-029864-000	834
991-029875-000	923
991-031834-000	74LS377
991-031918-000	74LS85
991-2P	129
991-3N	128
991-10462	199
991-11706	132
991-021444-002	902
991T1	102
992-021008	234
992-020054	243
992-004091	130
992-004092	175
992-06040	244
992-00-1192	104
992-00-2271	130
992-00-2298	123AP
992-00-3139	130
992-00-3139A	130
992-00-3144	123AP
992-00-3172	124
992-00-4091	130
992-00-4092	130
992-00-8870	121
992-00-8890	179
992-00-8890L	179
992-008-890	121MP
992-020432	130
992-020432-0	181
992-001192	121
992-021409	280
992-022201	175
992-002271	130
992-00271	130
992-00271A	130
992-0031139	130
992-003139	130
992-003172	175
992-013705	175
992-026039-2	243
992-008393	85
992-008870	121
992-008890	121
992-08890	121
992-01	291
992-01-1216	121
992-01-1218	121
992-01-1317	130
992-01-3684	154
992-01-3705	175
992-01-3738	123AP
992-011216	121
992-011218	121
992-011317	184
992-013684	128
992-013738	199
992-017169	130
992-02271	130
992-024149-008	933
992-024185	130
992-1A6-1	105
992-10	116
992-531-01	166
992T1	102A
995-01-6130	153
995-01-6131	152
998-0200816	123AP
998-0061114	123AP
999-4601	128
1000-12	139A
1000-17	109
1000-23	743
1000-25	703
1000-129	116
1000-130	177
1000-131	109
1000-132	139A
1000-133	144A
1000-135	107
1000-136	123AP
1000-137	123AP
1000-138	152
1000-139	195A
1000-140	190
1000-141	195A
1000-142	152
1000-2640	142A
1000-5600	605A
1000-6914	5015A
1000-6948	1248
1000-6963	1571
1000-6971	1387
1000-6989	451
1000-7052	85
1000-7334	85
1000-7359	5304
1000-9959	107
1000HB1U	5348
1000HB2U	5348
1000HB3U	5348
1000HB4U	5348
1000HB6U	5348
1000HT20	5338
1000HT30	5338
1000HT40	5338
1000HT50	5338
1000HT60	5338
1001	102A
1001(EF JOHNSON)	9924
1001(GE)	712
1001(JULIETTE)	123AP
1001-0091/4460	1140
1001-01	128
1001-02	123AP
1001-02(COURIER)	107
1001-03	123AP
1001-04	123AP
1001-05	123AP
1001-06	123AP
1001-07	195A
1001-08	237
1001-09	130
1001-0478	601
1001-5	5642
1001-6	5642
1001-10	109
1001-11	116
1001-12	139A
1001-13	506
1001-25(LAFAYETTE)	703
1001-1179	123AP
1001-5600	605A
1001-5667	116
1001-5683	116
1001-5766	159
1001-5824	153
1001-5832	89
1001-5915	123AP
1001-5949	85
1001-5956	1522
1001-5972	712
1001-6657	152
1001-6699	5801
1001-6806	519
1001-6947	289A
1001-6962	290A
1001-7069	123AP
1001-7077	85
1001-7119	375
1001-7663	102
1001-9552	177
1001-9602	109
1001-9610	116
1001-9628	399
1001-9636	289A
1001-9644	85
1001-9651	375
1001-9685	1187
1001-9693	712
1001-9735	615P
1001-9958	229
1001-9966	123AP
1001-9974	123AP
1001-9990	123AP
1001=9552	117
1002	234
1002(SQUELCH)	158
1002-0006	1003
1002-0014	109
1002-0402	123AP
1002-01	133
1002-02	229
1002-02A	108
1002-03	123AP
1002-04	123AP
1002-04-1	108
1002-05	102A
1002-07	1012
1002-08	109
1002-09	109
1002-0219	116
1002-0345	1465
1002-0436	153
1002-0519	5011A
1002-17	109
1002-17(DIODE)	109
1002-25	726
1002-68	229
1002-4404	142A
1002-5567	108
1002-5625	192
1002-5690	5015A
1002-6219	116
1002A(JULIETTE)	107
1002A-1	129
1002A-2	128
1003	102A
1003(E.F. JOHNSON)	102A
1003(JULIETTE)	126
1003(TRANS)	2357
1003-01	107
1003-02	1045
1003-0518	398
1003-11	177
1003-13	116
1003-3116	1465
1003-6754	199
1004	2359
1004(2SC537)	123AP
1004(DIODE)	109
1004(G.E.)	161
1004(TRANS)	2359
1004-0780	199
1004-01	158
1004-02	195A
1004-03	123AP
1004-0392	159
1004-0798	230
1004-17	108
1004-1960	109
1004-2042	1560
1004P	129
1005	109
1005(2SC537)	123AP
1005(JULIETTE RECT)	116
1005(JULIETTE TRANS)	102A
1005(JULIETTE-DIODE)	109
1005-02	195A
1005-03	123AP
1005-3	123AP
1005-17	102A
1005-20	116
1005M19	159
1006	229
1006(DIODE)	109
1006(G.E.)	161
1006(JULIETTE GERM)	102A
1006(JULIETTE RECT)	116
1006(JULIETTE TRANS)	123AP
1006-0895	85
1006-0937	196
1006-17	125
1006-24	116
1006-48	123AP
1006-78	160
1006-93	102A
1006-1737	145A
1006-2594	290A
1006-5977	614
1006-5985	140A
1006-7445	1376
1006-9292	109
1007	109
1007(2SB405)	158
1007(JULIETTE RECT)	116
1007(JULIETTE TRANS)	126
1007(JULIETTE-DIODE)	109
1007(JULIETTE-RECT)	116
1007-0951	116
1007-17	102A
1007-17(DIODE)	109
1007-1124	109
1007-3054	229
1007-3062	229
1007-3088	289
1007-3153	123AP
1007-3344	172A
1007-5869	123AP
1007-5901	5009A
1007-5919	610
1007-FISHER	130
1008	128
1008(E.F. JOHNSON)	102A
1008(JULIETTE)	131
1008(POWER)	131
1008-02	123AP
1008-17	104
1008-25	726
1009	158
1009(E.F. JOHNSON)	102A
1009(G.E.)	161
1009(JULIETTE)	116
1009(JULIETTE-RECT)	116
1009(SEARS)	158
1009-01	222
1009-02	123AP
1009-02-16	123AP
1009-03	195A

PART NUMBER	NTE REPLACEMENT
1009-03-17	128
1009-04	237
1009-04-17	195A
1009-05	300
1009-05A	196
1009-06	138A
1009-06(10)	138A
1009-07	177
1009-08	177
1009-09	116
1009-2	123AP
1009-11	1016
1009-17	123AP
1009-127	132
1009-8403	375
1010	140A
1010(20A90)	110MP
1010(GE)	233
1010(JULIETTE)	116
1010-14	195A
1010-17	191
1010-17(R.F.)	195A
1010-78	160
1010-87	160
1010-89	126
1010-143	177
1010-145	109
1010-7738	159
1010-7928	123AP
1010-7936	152
1010-7951	136A
1010-7993	128
1010-8025	165
1010-8033	290A
1010-8041	128
1010-8066	123AP
1010-8082	123AP
1010-8090	123AP
1010-8116	506
1010-8132	5080A
1010-8173	109
1010-9486	552
1010-9494	552
1010-9932	738
1010-9940	712
1010-9965	783
1010A	177
1011	109
1011(VO-6C)	116
1011-0302	519
1011-01	195A
1011-02	5071A
1011-11	191
1011-11(FOCUS)	118
1011-11(RF)	108
1011-2351	177
1011M57P01	129
1011M62P01	129
1012	116
1012(GE)	159
1012(IC)	1003
1012-17	109
1012-17(POWER)	5874
1012GE	106
1013	109
1013(E.F.JOHNSON)	159
1013(GE)	159
1013-15	229
1013-16	126
1014	116
1014(E.F. JOHNSON)	102A
1014(E.F.JOHNSON)	158
1014-25	703
1014-FISHER	123AP
1015	145A
1015-2FISHER	123AP
1015-FISHER	123AP
1016	234
1016(GE)	159
1016-17	116
1016-77	109
1016-78	116
1016-79	116
1016-80	703
1016-81	152
1016-83	108
1016-84	108
1016-85	313
1018	154
1018-25	1056
1018-1048	19
1018-1063	85
1018-2400	109
1018-3242	107
1018-3259	177
1018-6278	5019A
1018-6963	116
1018-9884	109
1018-13259	177
1019	159
1019(ZENITH)	159
1019-74	102A
1019-1203	233
1019-1385	506
1019-3852	123AP
1019-6699	109
1019M	159
1020	116
1020-17	123AP
1020-25	1075A
1020G	107
1021	312
1021-17	102
1021-25	1100
1022-0911	5007A
1022-1976	5016A
1022-5548	116
1023-17	102
1023G	123AP
1023G(GE)	123AP
1024	116
1024-17	104
1024G	123AP
1024G(GE)	123AP
1025-2712	712
1025-4712	712
1025G	123AP
1025G(GE)	123AP
1026	107
1026(GE)	229
1026FISHER	161
1026G	123AP
1026G(GE)	123AP
1027	146A
1027(FISHER)	229
1027(GE)	108
1027-4231	928M
1027-4264	1688
1027-4389	15013
1027-4462	1811
1027-4850	1812
1027-4959	1813
1027-5006	1828
1027-5113	1829
1027-5535	15030
1027-6244	15005
1027-6533	19
1027-6624	91
1027-7259	54
1027-7291	54
1027-7366	293
1027-7986	25
1027-8042	293
1027-8059	18
1027-9974	552
1027-9982	116
1027-9990	5010A
1027G	128
1027G(GE)	128
1028	123AP
1028(GE)	123AP
1028-0006	5011A
1028-0030	5019A
1028-0014	5011A
1028-0048	5019A
1028-0055	552
1028-0071	519
1028-0089	519
1028-0097	5010A
1028-0105	5014A
1028-01	375
1028-3984	177
1028-6755	116
1028G	123AP
1028G(GE)	123AP
1029	123AP
1029(GE)	123AP
1029-02	165
1029-02(ZENITH)	165
1029-CK	104
1029-FJ	5874
1029-FR	5194A
1029-GC	5021A
1029-GY	5009A
1029-HJ	5281A
1029-HN	519
1029-HP	129
1029-JB	159
1029-JK	5214A
1029-JP	129
1029-KT	5408
1029-LU	284
1029-LW	219
1029-MB	159
1029-ME	552
1029-NT	219
1029-NW	130
1029-NY	82
1029-PL	327
1029-PP	123AP
1029-PR	369
1029-PU	159
1029-RG	5463
1029-RU	5008A
1029-RW	519
1029-SL	552
1029-SN	125
1029-TC	5015A
1029-TE	5005A
1029-WC	5069A
1029-WE	123AP
1029-WG	159
1029-WK	377
1029-WN	5010A
1029-WP	285
1029-YC	5007A
1029-YD	123AP
1029-YE	159
1029G	123AP
1029G(GE)	123AP
1030	159
1030(GE)	165
1030-17	109
1030-21	199
1030-25	7473
1030-5530	377
1031-1(FISHER)	123AP
1031-2(FISHER)	123AP
1031-17	156
1031-25	7401
1032	102
1032-2(FISHER)	129
1032-3(FISHER)	129
1032-4(FISHER)	159
1032-5(FISHER)	129
1032-25	1141
1033	142A
1033-0911	177
1033-0983	519
1033-0991	519
1033-1	126
1033-1(FISHER)	128
1033-2	126
1033-2(FISHER)	128
1033-3	126
1033-4	126
1033-4(FISHER)	128
1033-5	102
1033-5(FISHER)	128
1033-6	103
1033-7	102
1033-8	116
1033-17	116
1033-1007	519
1033-1079	15
1033-1247	1712
1033-1262	1713
1033-1270	5404
1033-1338	1705
1033-1874	1628
1033-1916	109
1033-4340	4066B
1033-4985	290A
1033-5313	19
1033-5537	19
1033-6204	19
1033-6451	289A
1033-6493	289A
1033-6949	85
1033-6956	85
1033-7079	15
1033-7400	16
1033-7426	16
1033-7699	18
1033-7905	16
1034	171
1034-1(ZENITH)	171
1034-3(FISHER)	159
1034-4(FISHER)	159
1034-5(FISHER)	159
1034-17	123AP
1034-43	101
1035	158
1035(ZENITH)	297
1035-3(FISHER)	81
1035-4(FISHER)	81
1035-5(FISHER)	81
1035-80	199
1036	158
1036(SIL)	298
1036(ZENITH)	298
1036-20	121
1037(FISHER)	123AP
1037(ZENITH)	171
1037-0575	42
1037-1(FISHER)	182
1037-7174	1557
1038	124
1038(GE)	128
1038-1	123AP
1038-1-10	123AP
1038-6	123AP
1038-6CL	123AP
1038-8	123AP
1038-10	123AP
1038-15	123AP
1038-15CL	123AP
1038-18	123AP
1038-18CL	123AP
1038-21	123AP
1038-23	123AP
1038-23CL	123AP
1038-24	123AP
1038-1697	116
1038-1788	506
1038-1804	1046
1038-1853	198
1038-1861	274
1038-9922	234
1038/9922	290
1039-0060	290
1039-01	123AP
1039-0433	186A
1039-0441	289
1039-0458	128
1039-0482	107
1039-0515	198
1039-0516	198
1039-0888	107
1039-0961	229
1039-1290	238
1039-9772	85
1040	123AP
1040(FISHER)	123AP
1040(ZENITH)	123AP
1040-01	199
1040-02	175
1040-03	123AP
1040-04	195A
1040-05	237
1040-07	177
1040-08	109
1040-09	140A
1040-09(ZENER)	140A
1040-2	123AP
1040-7	128
1040-10	116
1040-11	128
1040-59	160
1040-80	103A
1040-81	116
1040-155	123AP
1040-9068	194
1040-9332	177
1040-9373	5081A
1041-63	116
1041-64	116
1041-65	109
1041-66	177
1041-67	138A
1041-68	1013
1041-69	1016
1041-70	132
1041-71	229
1041-72	123AP
1041-73	123AP
1041-74	152
1041-75	123AP
1041-76	190
1041-77	195A
1041-109	116
1041-4950	16
1041-4951	16
1041-5170	290A
1041-6949	290A
1042-02	133
1042-03	199
1042-04	123AP
1042-05	289
1042-06	159
1042-07	123AP
1042-08	235
1042-09	236
1042-3	109
1042-7	123AP
1042-8	235
1042-10	226MP
1042-12	109
1042-13	109
1042-14	178MP
1042-15	177
1042-16	177
1042-17	116
1042-18	139A
1042-19	5072A
1042-23	177
1043-0049	177
1043-07	123AP
1043-10	177
1043-1229	123AP
1043-1260	123AP
1043-1278	159
1043-1286	152
1043-1294	153
1043-1310	187
1043-1328	188
1043-1344	722
1043-1534	116
1043-1583	601
1043-7275	1576
1043-7309	124
1043-7358	152
1043-7374	159
1043-7382	116
1044	116
1044-0295	159
1044-3983	177
1044-6888	298
1044-7035	984
1044-7043	1174
1044-7049	1174
1044-8934	177
1044-8983	177
1044-9544	128
1045(FISHER)	182
1045-0518	116
1045-0534	116
1045-1722	107
1045-2761	712
1045-2951	123AP
1045-3082	128
1045-4676	159
1045-7802	177
1045-7828	152
1045-7836	153
1045-7844	130
1045-7851	130
1047-25	1052
1047-7115	290A
1048-6421	177
1048-7361	399
1048-9839	5072A
1048-9870	109
1048-9888	109
1048-9904	123AP
1048-9912	123AP
1048-9920	199
1048-9938	614
1048-9946	116
1048-9953	506
1048-9987	177
1048-9995	116
1049-0100	229
1049-0060	229
1049-0035	294
1049-0092	199
1049-0167	293
1049-1744	229
1049-3435	116
1050	116
1050(GE)	506
1050-21	199
1050-64	116
1050B	106
1051	506
1051(GE)	506
1051-5(FISHER)	81
1051-7(FISHER)	81
1051-559	109
1052-0229	290A
1052-17	102A
1053-1(FISHER)	123AP
1053-5(FISHER)	123AP
1054-1(FISHER)	123AP
1054-5(FISHER)	123A
1054-8295	513
1055-7726	229
1056-5(FISHER)	182
1056-3039	601
1056-4417	116
1056-8269	581
1057-1(FISHER)	182
1057-17	102A
1057-2071	194
1057-9140	5074A
1058(ZENITH)	171
1058-5(FISHER)	182
1058-3227	50
1058-3664	49
1059-2848	506
1059-7961	125
1059M	159
1060	116
1060-17	102A
1060-17(DRIVER)	158
1060-17(PRE-AMP)	102
1060-3553	177
1060-6564	294
1060-8149	107
1060-9428	157
1061-4667	109
1061-6274	165
1061-6282	162
1061-6290	506
1061-8312	194
1061-8320	229
1061-8338	196
1061-8346	198
1061-8353	198
1061-8361	125
1061-8379	116
1061-8387	116
1061-8668	198
1061-8807	290
1061-8908	198
1061-8916	116
1061-8924	116
1061-9068	194
1061-9153	1128
1061-9666	1130
1061-CP	74LS273
1062-0615	184
1062-7(FISHER)	123A
1062-5069	601
1062-6018	159
1062-6414	294
1062-7511	165
1062GE	177
1063-5(FISHER)	123AP
1063-79	116
1063-3553	109
1063-4145	5071A
1063-4806	310
1063-4814	308
1063-5019	797
1063-5142	171
1063-5209	147A
1063-5381	123AP
1063-5399	123AP
1063-5423	159
1063-5431	159
1063-5449	159
1063-5646	292
1063-5688	291
1063-5704	198
1063-6454	5071A
1063-6926	159
1063-7916	171
1063-8369	162
1063-8435	234
1063-8591	109
1063-8963	123AP
1063-8971	125
1064(GE)	712
1064(ZENITH)	159
1064-5(FISHER)	247
1064-4417	175
1064-6032	130
1064-6461	85
1064-6545	5024A
1064M	159
1065-2212	15004
1065-3225	152
1065-4861	7400
1065-6775	140A
1065-9928	116
1065-9936	198
1065-9944	175
1067	154
1067(GE)	154
1068-17	237
1068-17A	224
1069	152
1069(GE)	152
1069-7032	130
1070(DIODE)	125
1070-0623	125
1070-0631	198
1070-4781	533
1070-5481	147A
1070-8576	107
1071	153
1071(GE)	153
1071-0788	107
1071-2081	5004A
1071-3642	130
1071-4186	378
1071-4251	184
1071-4913	289
1072	193
1072-01(ZENITH)	291
1072-1	291
1072-4(RCA)	177
1072-8491	297
1072G	193
1072K	193
1072K(GE)	193
1073	163A
1073(FISHER)	229
1073-1073	552
1073-6361	552
1073-7104	221
1073-7105	221
1073-AY	923
1073-CC	7447
1073-CG	7493A
1073-CP	74180
1073-CT	941
1073-EC	924
1073-ED	922
1073-EH	75188
1073-EM	910D
1073-EY	75453B
1073-FA	74128
1073-FL	7427
1073-FN	74193
1073-FP	919D
1073-FT	956
1073-FW	74125
1073-FY	7409
1073-GB	923D
1074	163A
1074(FISHER)	229
1074(GE)	163A
1074-03	199
1074-24	109
1074-115	199
1074-116	186
1074-118	519
1074-119	116
1074-120	139A
1074-121	5076A
1074-122	5072A
1074-123	137A
1074-124	109
1074-1582	159
1074-7582	159
1074T	238
1075	233
1075(GE)	749
1075-5122	5013A
1075-6146	375
1075BLUE(GE)	749
1076(GE)	749
1076-0999	294
1076-1377	233
1076-1484	177
1076-1559	171
1076-1674	125
1076-4801	163A
1076-5196	159
1076-5691	85
1076BLUE	749
1077-07	123AP
1077-0261	116
1077-2309	293
1077-2325	109
1077-2333	611
1077-2341	177
1077-2358	605A
1077-2366	116
1077-2374	5402
1077-2382	1003
1077-2390	1006
1077-2408	1052
1077-2760	109
1077-3828	293
1077-3836	116
1077-3844	1218
1077-9288	110MP
1077-9296	109
1078-7372	113A
1079	783
1079(GE)	783
1079-01	177
1079-85	159
1079-89	177
1079-5102	222
1079-5110	107
1079-9928	90
1079-9955	116
1079-9963	552
1079-AY	4528B
1079-BC	8080A
1079-BJ	4585B
1079-BK	4070B
1079-BW	4024B
1079-CE	4502B
1079-CJ	4043B
1079-CM	4015B
1079-CN	4543B
1079-DB	4001B
1079-DC	4011B
1079-DD	4049
1079-DE	4050B
1079-DF	4002B
1079-DG	4012B
1079-DH	4023B
1079-DJ	4028B
1079-DS	4066B
1079GREEN	783
1080	128
1080-01	107
1080-03	199
1080-06	186
1080-07	289
1080-08	116
1080-10	139A
1080-20	107
1080-21	199
1080-130	152
1080-5364	130
1080-6396	123AP
1080-7584	128
1080-BG	74S158
1080-BP	74S30
1080-BU	74S133
1080-CA	74S181
1080-CC	74S251
1080-CE	74S258
1080-DG	8212
1080G	129
1080G(GE)	193
1081-1511	123AP
1081-3020	116
1081-3087	297
1081-3186	147A
1081-3285	5511
1081-3293	5401
1081-3301	123AP
1081-3319	123AP
1081-3343	238
1081-3350	190
1081-3368	152
1081-3475	123A
1081-3624	5081A
1081-4000	159
1081-4002	159
1081-4010	159
1081-4739	903
1081-8581	159
1081-9464	123AP
1081-9884	177
1081-AC	74LS139
1081-AE	74LS158
1081-AG	74LS197
1081-AT	74LS161A
1081-BD	74LS258
1081-BE	74LS283
1081-BG	74LS367
1081-BH	74LS670
1081-BK	74LS157
1081-BL	74LS365A
1081-BP	74LS20
1081-BS	74LS11
1081-BT	74LS38
1081-BW	74LS30
1081-BY	74LS240
1081-CA	74LS244
1081-CC	74LS27
1081-CD	74LS37
1081-CE	74LS85
1081-CF	74LS93
1081-CG	74LS112A
1081-CH	74LS123
1081-CJ	74LS126A
1081-CK	74LS164
1081-CM	74LS191
1081-CP	74LS273
1081-CT	74LS374
1081-CU	74LS05
1081-CW	74LS14
1081-CY	74LS221
1081-DA	74LS125A
1081-DB	74LS42
1081-DC	74LS242
1081-DD	74LS368
1081-DE	74LS280
1081-DF	74LS241
1081-DG	74LS279
1081-DH	74LS155
1081-DJ	74LS21
1081-DM	74LS253
1081-DN	74LS160A
1081-GJ	74LS126A
1081K94-6	941
1081K94-7	909
1081K94-9	941
1082-0124	552
1082-1043	123AP
1082-1056	199
1082-1403	123AP
1082-4803	523
1082-6717	116
1082-6915	5021A
1082-9202	112
1082-9208	112
1083-17	158

PART NUMBER	NTE REPLACEMENT
1084	125
1084(GE)	108
1084-9784	159
1085(GE)	522
1085-8967	108
1086	522
1086(GE TRIPLER)	500A
1086-1284	222
1086-3924	108
1086-3967	287
1086-4080	519
1087	128
1087-02	123AP
1087-1606	229
1087-1648	234
1087-1663	290A
1087-1713	519
1087-2380	128
1087-2901	85
1088-9517	177
1089 6199	159
1089-6199	159
1089-9307	912
1089-9938	398
1090	125
1090-0033	552
1090-0071	177
1090-0827	136A
1090-1981	177
1091	5080A
1091(GE)	5080A
1091-0826	5018A
1091-3549	5020A
1092	181
1092(GE)	181
1092-16	177
1093	123AP
1093-2697	109
1094-7877	152
1095-01	312
1095-2638	290A
1095-2679	5014A
1095-6324	5011A
1095J2F	116
1096-11	224
1096-12	199
1096J2F	116
1097	783
1097(GE)	186
1097-85	294
1098-14	152
1098-15	224
1098-1975	5010A
1098-8665	552
1099-0950	128
1099-1214	331
1099-2972	116
1099-3616	990
1099-3624	824
1099-6270	123AP
1099-6502	5116A
1099-6510	5142A
1099-6791	5020A
1099-6891	525
1099-6981	525
1099-7567	109
1099-9050	123AP
1099-9100	186A
1099-9175	375
1099-9183	198
1099-9217	123AP
1100	187
1100(GE)	187
1100-75	195A
1100-1179	123AP
1100-3951	85
1100-6952	5009A
1100-9446	107
1100-9453	107
1100-9461	123A
1100-9479	123AP
1100-9487	519
1101	5063A
1101(ZENITH)	159
1101-1604	332
1101-8181	124
1101-9072	5526
1102	134A
1102(ZENER)	5005A
1102-17	158
1102-17A	102A
1102-63	101
1102-6853	552
1102-6861	187A
1102-9568	613
1103	134A
1103-88	116
1103-3727	519
1104	5009A
1104-94	102A
1104-95	103A
1104-96	116
1104-5960	399
1105	5011A
1105-15	121
1105-2750	116
1105-3063	399
1105-4558	85
1106	5014A
1106-29	116
1106-36	116
1106-87	108
1106-99	128
1107	5015A
1108	5016A
1108-73	116
1108H511	116
1109	5018A
1109(GE)	196
1110	5019A
1110-86	116
1111	5020A
1111(GE)	152
1111-17	160
1111-18	160
1111P	1002
1112	5021A
1112-3(RCA)	159
1112-7	159
1112-7(RCA)	159
1112-8	159
1112-10	159
1112-10(RCA)	159
1112-12	129
1112-12(RCA)	159
1112-78	128
1112-79	195A
1113	5023A
1113(GE)	153
1113-03	123AP
1113-13	160
1113-2875	102
1114-4458	1060
1115	165
1115-2	123A
1115-2(RCA)	123AP
1115-5	123A
1115-13	123AP
1115-13(RCA)	123AP
1115-14	123AP
1115-14(RCA)	123AP
1115-16	116
1115T(GE)	165
1116	5026A
1116(GE)	186
1116-42	116
1116-2823	5119A
1116-3177	189
1116-3185	123AP
1116-3243	123AP
1116-4027	123AP
1116-4084	159
1116-4092	159
1116-4126	159
1116-4365	177
1116-5016	159
1116-6527	130
1116-6535	128
1116-6691	1187
1116-7004	159
1117(MC)	123AP
1117-7RCA	159
1117-76	116
1117-4422	123AP
1117-5353	399
1118	5027A
1118-1	161
1118-2	161
1118-3	161
1118-4	161
1118-17	109
1118-20	116
1119	171
1119(GE)	171
1119-17	109
1119-54	160
1119-55	160
1119-56	160
1119-57	102A
1119-58	103A
1119-59	102A
1119-4628	181
1119-8132	123AP
1119-9254	229
1120	5029A
1120-7	123AP
1120-7(RCA)	123AP
1120-8	123AP
1120-8(RCA)	123AP
1120-14	123AP
1120-14(RCA)	123AP
1120-15	123AP
1120-15(RCA)	123AP
1120-17	177
1120-18	116
1121-1	7472
1121-17	116
1122	5030A
1122-6	123AP
1122-6(RCA)	123AP
1122-7	123AP
1122-7(RCA)	123AP
1122-96	126
1122-2403	85
1122-2411	290A
1122-2437	290A
1122-8863	1465
1123(JULIETTE)	116
1123-55	108
1123-56	108
1123-57	108
1123-58	108
1123-59	108
1123-60	123AP
1123-1388	238
1123-3335	175
1124	121
1124-0239	1545
1124A	121
1124B	121
1124C	104
1125	186
1125(GE)	186
1125-3(RCA)	179
1125-1188	290A
1125-2582	159
1125-2590	610
1125-2608	5014A
1125-7722	109
1125/2582	159
1126-0023	16
1126-0031	5022A
1126-0049	116
1126-0304	19
1126-0320	19
1126-0239	1545
1126-0312	19
1126-0353	16
1126-0395	519
1126-5170	290A
1126-7234	3120
1126-8430	172A
1126-8836	5140A
1126-8851	123AP
1127	146A
1127-2077	910
1127-4338	54
1127-8454	16
1127-8470	116
1127-8488	5013A
1128	159
1128-17	102A
1128-4304	290A
1128-4437	116
1128-7547	611
1129	1045
1129(GE)	712
1129-8015	290A
1132-2	184
1132-2(RCA)	184
1132-4	152
1132-4(RCA)	152
1132-5	196
1132-5(RCA)	196
1133	147A
1133-0305	5011A
1133-0289	586
1133-0321	5019A
1133-1	188
1133-1(RCA)	188
1134-1	189
1134-1(RCA)	189
1135-1	184
1135-1(RCA)	130
1135-2	181
1135-3646	159
1135-7076	297
1135-8074	147A
1135-9064	5131A
1136(GE)	783
1136-3(RCA)	172A
1136-4064	177
1136GREEN	783
1137-7058	5018A
1137-7215	519
1138	116
1138-4757	94
1138-9467	290A
1138-9640	152
1138-9657	552
1139-1	180
1139-17	116
1140-1	184
1140-17	102A
1140-2310	222
1140-2320	123AP
1140-2328	123AP
1140-2864	123AP
1140-2898	5026A
1140-2906	519
1140-3193	123AP
1140-3201	123AP
1140-3219	291
1140-3383	159
1140-3391	5404
1140-3404	145A
1140-3409	145A
1140-3417	552
1140-3909	5026A
1140-4118	1437
1140-4126	136A
1140-4233	229
1140-7673	116
1141-1	185
1143-0584	4027B
1143-0956	585
1143-1046	519
1143-1049	519
1143-2861	19
1143-2903	16
1144-1482	19
1144-5749	125
1144-9261	152
1145	100
1145-17	102A
1145-2695	5021A
1145-2703	123AP
1145-2711	229
1145-2729	210
1145-2737	159
1145-2745	123AP
1145-2752	123AP
1145-2778	152
1145-2786	1545
1145-2787	842
1145-3156	123AP
1145-3164	159
1145-3370	125
1145-4741	552
1145-7961	125
1146	100
1146-0888	519
1146-0896	612
1146S(ZENER)	5020A
1147	106
1147(GE)	159
1147-08	960
1147-09	4011B
1147-0523	5010A
1147-11	4029B
1147-161	1254
1147-3204	5014A
1147-3220	5029A
1147-3238	5020A
1147-6249	290A
1147-7673	552
1148-0956	552
1148-17	158
1148-7944	116
1148-9648	90
1149-0740	159
1149-0760	159
1149-0182	5014A
1149-0224	116
1149-0729	712
1149-0729(1)	712
1149-0794	123AP
1149-2469	159
1149-2477	108
1149-2501	389
1149-2527	109
1149-2535	519
1149-2543	116
1149-2576	177
1149-4332	85
1149-4374	288
1149-4390	85
1149-4408	399
1149-4424	184
1149-6729	712
1150(GE)	5457
1150-7746	85
1150-7753	85
1150-7761	5019A
1150-8504	199
1150-9098	15
1151	749
1151(GE)	749
1151-3736	85
1151BLUE(GE)	749
1152	234
1152(GE)	749
1152BLUE(GE)	749
1153(GE)	783
1153-0128	382
1153GREEN	783
1154	783
1154(GE)	783
1154-5613	159
1154-6199	85
1154-6561	5026A
1154-6579	375
1154-9680	5068A
1154-9938	834
1154GREEN	783
1155-1934	5511
1155-8228	107
1155-8236	85
1155-9259	1563
1155GE	506
1156	513
1156(GE)	513
1156-1644	177
1157	128
1157(GE)	194
1157-4837	123AP
1157-8564	4011B
1157-8572	1575
1157-8580	375
1157-8598	197
1157-8606	107
1157-8622	85
1157-8630	289A
1157-8648	290A
1157-8655	519
1157-8663	109
1157-8671	125
1157-8689	615P
1157-8697	5008A
1157-8929	601
1157-8937	600
1157-8945	605A
1160-7009	5013A
1160-7611	5011A
1160-7629	5018A
1160-8015	585
1161-2926	5011A
1161-7719	123AP
1163-4110	5018A
1163-9572	290A
1164(GE)	712
1164B	6026
1164D	6034
1164F	6040
1164H	6042
1164K	6044
1165	712
1165(GE)	712
1166(GE)	124
1166-3829	844
1166-3887	230
1166-7821	102
1168-7944	552
1169	154
1169-4478	5014A
1170-0036	1616
1172-0026	1483
1172-0034	1471
1172-0042	966
1172-1396	89
1172-1494	123AP
1172-5157	1234
1172-5272	19
1172-5306	56
1172-5330	16
1172-5413	5022A
1172-5504	519
1173(GE)	712
1173-1171	107
1173-1494	123AP
1173-2575	108
1173-4639	1657
1173-8200	190
1173-8309	552
1173-8317	5085A
1173-8325	552
1174	749
1174(GE)	749
1175-0064	85
1175-7879	1689
1175-7903	1630
1175-7911	928M
1175-7937	943M
1175-7945	16
1175-8000	928M
1175-8018	943M
1175-8026	18
1175-8190	19
1175-8281	16
1175-8299	16
1175-8349	605A
1175-8364	5005A
1176-5013	85
1176-5039	5010A
1176-7142	85
1176-7159	375
1176-7167	399
1176-7175	89
1176-7183	399
1176-7217	552
1176-7225	552
1176-7233	5013A
1176-7241	116
1176-7266	1547
1176-7274	1236
1176-7645	552
1176-8819	85
1176-8827	290A
1177-1151	1410
1177-1169	1417
1177-1243	519
1177-4422	123AP
1178	1045
1178-3453	102
1178-3842	198
1178-3859	123AP
1178-4291	399
1178-6745	552
1178-7209	399
1178-7454	1545
1178-7462	1547
1178-7470	159
1178-7488	159
1178-7488(1)	159
1178-7496	198
1178-7512	123AP
1178-7520	123AP
1178-7538	375
1178-7546	398
1178-7553	399
1178-7579	89
1178-7587	89
1178-7597	89
1178-7603	116
1178-7611	177
1178-7637	552
1178-7645	552
1178-7652	580
1178-7660	552
1178-7686	5013A
1178-7868	5013A
1179(GE)	712
1179-0334	5529
1179-1308	187A
1179-1324	54
1179-1332	379
1179-1340	116
1179-1357	580
1179-1365	125
1179-9186	519
1180-0182	102
1180-1859	519
1180-1867	290A
1180-1875	116
1180-1883	5402
1180-1917	398
1180-1925	89
1180-1933	5010A
1180-1941	165
1180-1958	85
1180-1966	243
1180-1990	56
1180-2006	85
1180-2022	289A
1180-2030	5036A
1180-2048	5014A
1180-4457	5021A
1180-5991	1650
1180-6296	146A
1181-3201	1226
1181-3268	140A
1181-3396	451
1181-3409	107
1181-3417	199
1181-3425	199
1181-3433	382
1181-3458	85
1181-3466	373
1181-3474	382
1181-3565	1562
1181-3739	399
1181-3763	1547
1181-3771	85
1181-3789	399
1181-3797	399
1181-4928	4016B
1181-5263	5021A
1181-6417	199
1181-7111	519
1183-0494	5004A
1183-17	195A
1183-3258	89
1183-3266	5021A
1183-3274	116
1183-3282	506
1183-3290	552
1183-3308	5314
1183-3314	116
1183-3316	116
1183-3458	519
1183-3548	519
1183-8216	5027A
1184-5641	116
1184-5658	5019A
1184-5666	5019A
1184-5682	552
1184-5708	519
1184-5716	519
1184-5732	5020A
1184-8108	1416
1184-9064	5021A
1184-9098	116
1184G	129
1184G(GE)	193
1185-0260	290A
1185-0161	1711
1186	159
1186(GE)	159
1186-1	614
1186-3	614
1186-4	614
1186-5	112
1186-5573	552
1186-5581	5031A
1186-5672	1616
1186-5888	1483
1186-5912	1664
1186-5953	5402
1186-5987	157
1186-5995	157
1187	128
1187(GE)	192
1188-0101	5020A
1188-3097	16
1188-6306	116
1190	165
1191-3340	1409
1191-3357	4013B
1191-3365	4042B
1191-3373	290A
1191-3381	15
1191-3399	377
1191-3415	125
1191-3423	125
1191-3431	5009A
1191-3449	5009A
1191-4769	107
1191-4793	379
1191-4819	555
1191-4991	1661
1191-7860	198
1191-8869	30001
1192	102
1192(GE)	712
1192(IC)	1045
1192(XSTR)	102
1192-7837	601
1192-7845	109
1192-7852	1522
1192-7860	198
1192-7878	85
1192-7886	152
1192-9288	198
1193(GE)	712
1193-0062	123AP
1193-4163	54
1193-4171	5019A
1193-4189	552
1193-4197	5013A
1193-4205	5004A
1193-8511	16006
1193-8537	519
1195-2679	5014A
1195-4455	580
1195-6372	5012A
1195-6380	519
1195-6398	519
1195-6406	552
1195-6414	552
1195-6422	552
1195-6430	5020A
1195-6448	605A
1195-6455	580
1195-6463	2V150
1195-6471	5092A
1195-6497	399
1195-6505	85
1195-6513	375
1195-6521	198
1195-6539	399
1195-6570	1416
1195-6893	5018A
1195-6901	157
1195-6943	165
1197-0027	5019A
1197-1686	19
1197-1777	16
1197-1793	5022A
1197-1819	5016A
1197-6024	5010A
1197-6032	1842
1197-6040	1651
1198(HARMON-KARDON)	128
1198-4143	290A
1198-4176	399
1198-4176(1)	399
1198-4200	399
1198-4267	128P
1198-4291	289A
1198-4325	399
1198-4358	290A
1198-4382	519
1198-7686	5013A
1199-7822	552
1199-7830	5074A
1199-7848	712
1199-7855	1471
1199-7863	159
1199-7871	399
1200-1913	290A
1200-2036	398
1200-2093	289A
1200-2148	116
1200-2184	116
1200-2242	143A
1200-2358	1674
1200-2531	85
1200-3412	5036A
1200-3430	1373
1200-3463	1658
1200-3488	1650
1200-3497	4052B
1200-3505	40160B
1200-3530	1373
1200-3539	290A
1200-3547	85
1200-3554	157
1200-3588	89
1200-3604	458
1200-3612	5036A
1200-3620	519
1200-3638	552
1200-3646	580
1200-3653	5304
1200-4758	293
1200-8336	238
1200-9460	152
1200-9528	519
1200-9585	5009A
1201-4114	116
1201-4148	5074A
1201-4171	552
1201-4205	116
1201-7331	107
1201-7349	123AP
1201-7372	294
1201-7430	5041A
1201-8156	288
1201-8180	194
1201-8214	123AP
1201-8248	5051A
1201-9618	1833
1202	2355
1202(TRANS)	2355
1202-0229	290A
1202-1678	13
1202-7678	13
1202-7702	519
1202-7710	519
1202-7751	5020A
1202-7769	5022A
1203	2357
1203(GE)	123AP
1203(TRANS)	2357
1203-169	123AP
1203-6323	19
1203-6380	5023A
1203-6414	5022A
1203-7420	85
1204	2359
1204(GE)	128
1204(TRANS)	2359
1204TRANS	2359
1205	5244A
1205(GE)	123AP
1205-7790	5022A
1205-7816	399
1205-7832	1545

PART NUMBER	NTE REPLACEMENT
1205-7840	399
1205-7840(1)	399
1205-7845	290A
1205-7857	289A
1205-7857(1)	289A
1205-7865	290A
1205-7873	24
1205-7873(1)	289A
1205-7899	399
1205-7899(1)	399
1205-7923	552
1206	5247A
1206(GE)	128
1206-17	110MP
1207	5248A
1207(GE)	128
1207-17	109
1207-4543	552
1207-6600	519
1207-6634	116
1207-6667	116
1207-6691	5010A
1207-6725	375
1207-6758	293
1207-6782	373
1207-6816	320
1207-6907	4027B
1207-6931	4053B
1207-6964	374
1207-7673	375
1208	5249A
1208(GE)	123AP
1208-3853	5019A
1208-3861	5009A
1209	5251A
1209-0445	399
1209-0445(1)	399
1209-3035	5020A
1209-3043	5020A
1209-3043(DIODE)	552
1209-5873	399
1209-7143	24
1210	5252A
1210-17	313
1210-17(MIXER)	123AP
1210-17(OSC)	123AP
1210-17B	123AP
1211	5253A
1212	5254A
1212(ROSS)	177
1212-4	235
1212-5009	552
1213	5255A
1213-6446	177
1214	159
1214-4915	290A
1214-4945	1545
1214-4952	290A
1214-4952(1)	290A
1214-4957	290A
1214-4960	290A
1214-4960(1)	290A
1214-4978	289A
1214-4978(1)	289A
1214-4986	399
1214-4986(1)	399
1214-4994	552
1214-4994(1)	558
1214-5009	552
1214-5009(1)	552
1214-5017	5013A
1214-5017(1)	5012A
1214-5024	125
1214-5025	125
1214-5025(1)	125
1215-3839	116
1215-4274	558
1215-5693	580
1215-5701	5010A
1217-0536	159
1217-0536(1)	159
1217-0544	399
1217-0544(1)	399
1217-2284	15020
1217-2383	399
1217-8562	16
1217-8570	16
1217-8588	289A
1217-8596	289A
1217-8604	85
1217-8612	85
1217-8620	17
1217-8935	1805
1217-8950	1808
1217-8968	1809
1217-8976	1809
1217-8992	1810
1217-9008	1812
1217-9016	1813
1217-9024	928M
1217-9040	15030
1217-9065	1787
1217-9099	17
1217-9107	91
1217-9115	16
1217-9123	16001
1217-9131	379
1217-9149	379
1217-9156	377
1217-9164	13
1217-9172	377
1217-9180	552
1217-9198	551
1217-9206	5010A
1217-9214	5010A
1217-9222	5011A
1217-9230	5011A
1217-9248	5019A
1217-9271	580
1217-9289	5069A
1217-9297	552
1217-9305	605A
1217-9313	5014A
1217-9321	5019A
1217-9339	5021A
1217-9347	5022A
1217-9362	580
1217-9370	168
1217-9388	552
1217-9396	168
1217SK333	311
1222-6684	290A
1222-7104	123AP
1223	505
1223-1924	5025A
1223-2229	293
1223-2245	85
1223-2252	580
1223-2260	5010A
1223-2278	552
1223-2286	5027A
1223-2294	5030A
1225-4975	4066B
1225-9224	966
1227-0187	85
1227-3	107
1227-17	123AP
1227-4296	289A
1227-4304	289A
1227-4312	85
1227-4320	85
1227-4338	54
1228-17	123AP
1228-4017	85
1228-4022	184
1228-4410	1547
1228-4428	85
1228-4451	2302
1228-4469	2302
1229-1159	2356
1229-1167	2358
1229-1175	2355
1229-1183	2357
1229-1191	2359
1229-1308	5018A
1229-4625	1529
1229-4633	4071B
1229-4658	4071B
1229-4724	19
1229-4799	5084A
1229-4807	5015A
1229-4815	5015A
1229-8170	254
1229-8477	85
1229-8709	5021A
1229-8725	615P
1229-8733	5011A
1229-8766	519
1229H	108
1231-0140	778A
1231-0207	15045
1231-0405	5018A
1231-0116	1710
1231-0132	778A
1231-0165	1529
1231-0215	15027
1231-0348	17
1231-0355	19
1231-0363	15
1231-0371	16
1231-0389	315
1231-0397	377
1231-0447	5018A
1231-3185	290A
1231-4720	289A
1231-4787	290A
1231-8325	1716
1231-8341	1409
1231-8358	7020
1231-8408	16
1231-8416	19
1231-8424	5029A
1231-8432	5029A
1231-8440	552
1232-2889	5024A
1232-7292	1780
1232-7300	1373
1232-7409	198
1232-7573	1678
1232-7730	46
1232-7805	5314
1232-7946	165
1234-5849	270
1234-5864	85
1234-5880	295
1234-5898	116
1234-5906	552
1234-5914	5029A
1235-2126	123AP
1236-3750	159
1236-3776	123AP
1237-9467	5010A
1238-9730	294
1238-9748	552
1238-9755	5010A
1238-9763	290A
1238-9771	375
1239 5752	175
1239-4755	519
1239-5752	175
1239-6560	519
1239-7766	4066B
1239-7774	398
1239-7782	290A
1239-7808	125
1239-7824	552
1241	100
1241-719	126
1241A	102
1244-3834	2302
1247-7121	116
1247-9523	2302
1248	102A
1248-2540	125
1251-1-1	222
1252-4906	552
1254	106
1254(GE)	159
1255-1222	2355
1255-1289	519
1255-2626	5021A
1257-4570	5024A
1257-4596	552
1257-4612	5030A
1257-4620	5019A
1257-4638	137A
1258-2352	5012A
1258-2532	5012A
1258-2540	125
1259-2739	2358
1259-2747	2357
1259-2754	519 N2
1259-2804	6246
1259-4917	1576
1259-4966	15045
1259-5005	4030B
1259-5047	2302
1259-5054	5011A
1259-5062	5013A
1259-5096	5010A
1259-5104	5019A
1259-5138	116
1259-5146	552
1259-5179	519
1259-5187	519
1259-6516	1140
1259-6524	15001
1259-6532	1569
1259-6565	85
1259-6573	290A
1259-6581	157
1259-7702	519
1263A	116
1266-0268	123AP
1266-2219	290A
1266-2227	290A
1266-2243	85
1266-2250	186A
1266-2268	123AP
1266-2276	519
1266-2292	375
1266-2300	89
1266-2318	519
1266-2326	142A
1266-2334	5020A
1266-2342	552
1266-2359	552
1266-2367	552
1266-2375	552
1266-2391	116
1266-2409	116
1266-2417	116
1266-2441	1719
1266-2458	1725
1266-2466	1650
1266-2471	116
1266-2953	615P
1266-5201	152
1269	184
1270-1769	1800
1270-1777	1801
1270-1785	15027
1270-1793	5014A
1270-1801	116
1270-4797	552
1270-4805	147A
1270-4821	5013A
1270-5208	290A
1270-5214	399
1270-5216	399
1270-5224	85
1270-5232	399
1270-5240	85
1270-5257	2302
1270-5265	552
1270-5273	552
1270-5281	519
1270-5588	5009A
1271-2972	376
1271-3111	15040
1272	123AP
1275-3034	399
1276-1292	5006A
1277-17	102A
1277-4320	85
1278	749
1278(GE)	749
1282	186
1284	108
1285	187
1285(GE)	187
1289	116
1290-3613	399
1290-6814	5010A
1290-6848	24
1290-6855	24
1290-6863	159
1290-6871	159
1294	106
1294(GE)	159
1294-9624	376
1296-1892	1728
1296-1900	1845
1296-1926	15041
1296-1934	399
1296-1942	2302
1296-1959	2302
1296-2718	3092
1297-1404	2302
1297-1412	2302
1298-0801	123AP
1298-0785	1674
1298-0819	159
1298-0827	552
1298-0835	399
1298-3391	108
1298-3409	966
1298-3888	966
1298-6923	109
1298-6931	123AP
1299-7862	966
1300-1	128
1300-3306	30001
1300A	128
1300RN	107
1301-1	160
1301-2	160
1302	5111A
1303	5113A
1303-1802	375
1303-2479	5022A
1305	5117A
1306	5120A
1307	5121A
1307H	722
1308	5122A
1308-1802	375
1309	5124A
1309-0915	5021A
1309-1004	40174B
1310	5125A
1310-4997	399
1310-8253	290A
1310-8261	399
1310-8287	85
1310-8295	85
1310-8303	5010T1
1310-8349	15001
1310-8352	5018A
1310-8394	1728
1310-8395	85
1310-8402	1845
1310-8410	1773
1310-8522	5018A
1311	5126A
1311-8641	1409
1312	5127A
1313	5129A
1313-5538	398
1313-5546	1777
1313-5553	1838
1313-5561	74LS00
1313-5652	198
1313-5793	4053B
1314	159
1314(GE)	159
1314-1718	375
1315	123AP
1315-9967	2331
1315-9983	376
1316	123AP
1316-0908	399
1316-0916	152
1316-0924	288
1316-0932	399
1316-0951	1576
1316-0973	15023
1316-0981	15007
1316-17	102A
1316-1013	1797
1316-3167	290A
1316-3175	552
1316-3183	5011A
1316-3225	3041
1316-7887	1827
1316-7895	1673
1316-7911	615P
1316-7929	615P
1316-7937	54
1316-7960	125
1316-7978	552
1316-7986	506
1316-7994	580
1317-17	102A
1318-5996	2331
1318-6275	399
1320	102
1321	163A
1321-1461	142A
1321-4051	5995
1321-7724	102
1321-7732	102
1324	291
1327-1291	1650
1327-1309	1471
1327-4922	290A
1327-4980	399
1327-5029	399
1327-5060	2302
1327-5078	5010T1
1327-5110	109
1327-5136	552
1327-5144	580
1329	102
1330	102
1330-5313	1856
1330-5339	5022A
1330-8927	519
1330-8937	519
1330-8952	5010A
1330-8960	552
1330-8973	5014A
1330-8978	5014A
1330-8994	5022A
1330-9018	5013A
1330-9026	552
1330-9034	5012A
1330-9059	552
1330-9067	552
1330-9083	552
1330-9091	525
1330-9109	5034A
1330-9125	125
1330-9158	552
1330-9174	519
1330-9216	1782
1330-9224	966
1330-9256	5004A
1330-9257	15029
1330-9265	15007
1330-9273	15023
1330-9281	1373
1331-7532	19
1331-7540	16
1331-7565	16
1331-7573	15
1331-7581	19
1331-7607	157
1331-7615	198
1331-7623	89
1331-7672	295
1331-9272	5015A
1339	130
1339(GE)	181
1340	100
1341	234
1344-3767	101
1344-6448	5011A
1344-7321	102
1344-8253	552
1344-8287	552
1344-8477	399
1345	295
1345(GE)	186
1346-8905	1658
1346-8939	1855
1346-8947	1776
1346-8954	459
1346-8962	5010T1
1346-8970	142A
1346-9010	5013A
1346-9028	125
1347-17	102A
1348-1429	290A
1348-1437	123AP
1348-1445	177
1348-4969	294
1348-4977	289A
1348-4985	5010A
1348-4993	139A
1348-5008	5020A
1348-5024	1777
1348A12H01	7417
1348A14H01	7476
1348A30H01	9930
1348A32H01	9932
1348A36H01	9936
1348A44H01	9944
1348A45H01	9945
1348A46H01	9946
1348A62H01	9962
1349-17	103A
1350	100
1351	738
1351G	3054
1352	738
1352G	3063
1354G	3059
1358	295
1358GE	186
1360	102
1361E	3053
1362-17	102A
1362-17A	102A
1362E	3062
1364-17	102A
1364E	3058
1368-1747	580
1368-1754	506
1368-1762	5006A
1368-1846	1685
1368-1853	1781
1368-2638	615P
1368C/D	123AP
1370	172A
1370-7229	552
1370-7245	5006A
1370-7351	382
1371	513
1371-17	103A
1371R	3052
1372R	3061
1373-17	233
1373-17A	107
1373-17AL	108
1373R	3065
1374-17	289
1374-17A	289
1374-17AC	123AP
1374R	3056
1376-001	5697
1376-002	5697
1381Y	3055
1382Y	3064
1384(GE)	196
1384Y	3060
1385(GE)	197
1390	100
1396	101
1400	100
1402B	123A
1402C	123AP
1402CD	123AP
1402D	123AP
1402E	123AP
1402E/D	123AP
1405-1(RCA)	156
1405-17	116
1410	100
1410-102	519
1410-102(ROGERS)	117
1410-167	116
1410-169	519
1410-169(ROGERS)	177
1410-171	109
1411-130	138A
1411-134	5188A
1411-135	142A
1411-136	140A
1411-137	5071A
1412-1	123AP
1412-1-12	123AP
1412-1-12-8	123AP
1412-170	116
1412-178	5400
1412-182	5802
1413-159	105
1413-160	102
1413-168	121
1413-172	121
1413-175	102
1413-178	121
1414-156	289A
1414-157	128
1414-158	129
1414-158(ROGERS)	159
1414-162	159
1414-166	85
1414-169	123AP
1414-172	199
1414-173	85
1414-174	199
1414-175	199
1414-176	159
1414-179	130
1414-180	247
1414-181	130
1414-183	123AP
1414-184	198
1414-185	129
1414-186	128
1414-187	129
1414-188	87
1414-189	128
1414-191	128
1414-192	181
1414-193	87
1414-195	180
1414A	121
1414A-12	121
1414A-12-8	121
1415	123AP
1415-050	6508
1415-075	937M
1415-307	2014
1417-177	105
1420-1-1	107
1420-2-2	161
1423	107
1424	85
1428	129
1429W	5011T1
1431 8349	123AP
1431-7184	181
1431-8349	123AP
1434	291
1436-17	102A
1449	160
1455-7-4	107
1459	102
1461E	3070
1462	74123
1463	123AP
1464E	3071
1465	123AP
1465-1	160
1465-1-12	160
1465-1-12-8	160
1465-2	103A
1465-2-12	103A
1465-2-12-8	103A
1465-4	101
1465-4-12	101
1465-4-12-8	101
1465A	160
1465A-12	160
1465A-12-8	160
1465B	126
1465B-12	126
1465B-12-8	126
1465C	121
1465C-12	121
1465C-12-8	121
1466-1	102A
1466-1-12	102A
1466-1-12-8	102A
1466-2	102A
1466-2-12	102A
1466-2-12-8	102A
1466-3	102A
1466-3-12	102A
1466-3-12-8	102A
1471-4356	9936
1471-4364	9946
1471-4372	9962
1471-4380	9930
1471-4398	9944
1471-4406	910
1471-4414	726
1471-4729	5995
1471-4778	123AP
1471-4802	130
1471-9860	9936
1471R	3068
1472 8349	199
1472-8349	199
1473-2	123AP
1473-4255	128
1474-3	100
1474-3-12	100
1474-3-12-8	100
1474-3736	911
1474R	3069
1476 1118	128
1476-17	102A
1476-17-6	102A
1476-1118	128
1477-3352	906
1477-3436	904
1477A	105
1477A-12	105
1477A-12-8	105
1477B	121MP
1477B-12	121MP
1477B-12-8	121MP
1477C	121MP
1477C-12	121MP
1477C-12-8	121MP
1479 7963	199
1479-0240	74H00
1479-0224	9937
1479-0257	74H21
1479-0265	74H20
1479-0273	941
1479-7963	199
1479-7971	74H04
1479-7989	123AP
1479-8011	923
1479-8029	159
1482	123AP
1482-17	195A
1483	123AP
1483(DIODE)	506
1483(TRANS)	128
1483E419	506
1483XSTR	123AP
1484A	121
1484A-12	121
1484A-12-8	121
1485-9896	9135
1486-8780	74H10
1487-17	195A
1488	75188
1488(SEARS)	116
1488B	160
1488B-12	160
1488B-12-8	160
1488C	100
1488C-12	100
1488C-12-8	100
1489	75189
1489-17	109
1492-1	105
1492-1-12	105
1492-1-12-8	105
1493-17	123AP
1501	229
1502-0229	290A
1502B	123AP
1502C	123AP
1502D	229
1505-9850	124
1507-7183	175
1510-2718	102
1512	109
1514	107
1514-059628	4011B
1515	123AP
1515(NPN)	199
1515(PNP)	101
1521B	218
1524	123
1526	160
1527-5282	9932
1527-5308	9945
1534-6	101
1534-8931	175
1540	123AP

PART NUMBER	NTE REPLACEMENT
1542	74145
1542(GE)	74145
1543-00	519
1548-17	175
1550	109
1550-17	143A
1553-17	159
1556W	5010T1
1559	5634
1559(GE)	5633
1559-17	121
1559-17A	121
1561-0403	130
1561-0404	130
1561-0408	181
1561-0410	181
1561-0604	130
1561-0608	181
1561-0610	181
1561-0803	181
1561-0804	181
1561-0805	181
1561-0808	181
1561-0810	181
1561-0615	181
1561-0815	181
1561-17	121
1561-1004	181
1561-1005	181
1561-1008	181
1561-1010	181
1561-1015	181
1561A603	130
1561A608	181
1561A615	181
1562	116
1567	123AP
1567-0	123AP
1567-2	123AP
1571-0401	175
1571-0402	175
1571-0420	175
1571-0601	175
1571-0602	175
1571-0620	175
1571-0801	175
1571-0802	175
1571-0820	175
1571-0425	175
1571-0825	175
1571-32	175
1571-33	175
1571-41	175
1571-42	175
1571-43	175
1571-1001	175
1571-1002	175
1571-1020	175
1571-1025	175
1573-00	128
1573-01	128
1573PQ	287
1574-01	234
1582	159
1582-0403	130
1582-0404	130
1582-0405	130
1582-0408	181
1582-0410	181
1582-0508	181
1582-0510	181
1582-0603	130
1582-0604	130
1582-0605	130
1582-0608	181
1582-0610	181
1582-0803	181
1582-0804	181
1582-0805	181
1582-0808	181
1582-0810	181
1582-0415	181
1582-0615	181
1582-0815	181
1582-1003	181
1582-1004	181
1582-1005	181
1582-1008	181
1582-1010	181
1582-1015	181
1582-1208	181
1582-1210	181
1582-1215	181
1582-1810	181
1585H	107
1602	290A
1602E(ECB)	159
1607A80	7406
1611-17	116
1612SK24E	133
1612SK41F	451
1615C	113A
1617C	115
1627 1843	177
1627-1843	177
1627-2064	9093
1634-17	313
1634-17-14A	108
1643	960
1673-0475	128
1674-17	116
1676-1991	128
1677-1149	923D
1678	175
1679 7391	159
1679-7391	159
1687-17	107
1688	128
1689	85
1689-2	85
1689-3	85
1689-4	85
1699-17	177
1700-5182	903
1702	129
1702-0	123AP
1702K	123AP
1702M	123AP
1702MNO	123AP
1703	130
1703-8662	519
1704	129
1705-4834	123AP
1705-5351	128
1710	152
1711	123AP
1711-17	123AP
1711MC	123AP
1712-17	123AP
1713-17	116
1714-0402	175
1714-0405	152
1714-0602	175
1714-0605	175
1714-0802	175
1714-0805	175
1714-1002	175
1714-1005	175
1721-0725	218
1723-0405	181
1723-0410	181
1723-0605	181
1723-0610	181
1723-0805	181
1723-0810	181
1723-17	123AP
1723-1005	181
1723-1010	181
1723-1205	181
1723-1210	181
1723-1405	181
1723-1410	181
1723-1605	181
1723-1610	181
1723-1805	181
1723-1810	181
1729-7284	923
1735R	3065
1737R	3061
1738R	3056
1741	1741
1741-0200	7408
1741-0051	7400
1741-0069	74H00
1741-0085	7401
1741-0150	74H04
1741-0440	7437
1741-0606	74H53
1741-0630	74H54
1741-0770	7483
1741-0804	7486
1741-0119	7402
1741-0143	7404
1741-0176	7405
1741-0184	74H05
1741-0234	7410
1741-0242	74H10
1741-0275	74H11
1741-0291	7417
1741-0325	7420
1741-0333	74H20
1741-0366	74H22
1741-0416	7430
1741-0424	74H30
1741-0473	7440
1741-0481	74H40
1741-0564	7451
1741-0572	74H51
1741-0598	7453
1741-0622	7454
1741-0663	74H55
1741-0689	7460
1741-0697	74H60
1741-0721	74H74
1741-0747	7475
1741-0895	7493A
1741-0952	7495
1741-1018	74107
1741-1042	74150
1741-1075	74151
1741-1133	7411
1741-1190	7441
1741-1224	7442
1741-1257	74121
1741-1299	74H21
1741-1323	74H183
1741-1349	74180
1741-1380	74H52
1743-1810	387
1750-103	177
1751-17	199
1751G036	123AP
1756-17	177
1758-1	846
1761-17	108
1763-0420	181
1763-0620	181
1763-0415	181
1763-0425	181
1763-0615	181
1763-0625	181
1763-0815	181
1763-0825	181
1763-1015	181
1763-1020	181
1763-1025	181
1763-1215	181
1763-1220	181
1763-1225	181
1763-1415	181
1763-1420	181
1763-1425	181
1766	142A
1777-17	102A
1778-17	109
1787R	3078
1788R	3079
1789-17	128
1792-17	108
1794-17	139A
1794-17(10)	139A
1798-1(RCA)	108
1799-17	123AP
1800	9924
1800-17	123AP
1800DC	9800
1800PC	9800
1801	161
1801DC	9801
1801PC	9801
1802DC	9802
1802L	294
1802M	294
1802N	294
1802PC	9802
1803DC	9803
1803PC	9803
1804	754
1804-17	154
1804DC	9804
1804PC	9804
1805	7401
1805DC	9805
1805PC	9805
1806	7404
1806-17	130
1806-17A	130
1806DC	9806
1806PC	9806
1807	7442
1807DC	9807
1807PC	9807
1808	7490
1808DC	9808
1808PC	9808
1809	177
1809(IC)	754
1809DC	9809
1809PC	9809
1810DC	9810
1811-110-1019	118
1811-110-10111	112
1811DC	9811
1811PC	9811
1812-1	123AP
1812-1-12	123AP
1812-1-127	123AP
1812-1L	123AP
1812-1L8	123AP
1812DC	9812
1812PC	9812
1814A	121
1814A-12	121
1814A-127	121
1814AL	121
1814AL-8	121
1814DC	9814
1814PC	9814
1818	177
1818(IC)	754
1820-0070	7430
1820-0054	7400
1820-0055	7490
1820-0058	909
1820-0063	7451
1820-0068	7410
1820-0069	7420
1820-0075	7473
1820-0077	7474
1820-0087	9950
1820-0095	9948
1820-0099	7493A
1820-0240	906
1820-0301	7475
1820-0304	7472
1820-0430	309K
1820-0707	74141
1820-0870	7408
1820-0122	9093
1820-0125	911
1820-0174	7404
1820-0214	7442
1820-0216-1	941M
1820-0217-1	941M
1820-0248	909
1820-0261	74121
1820-0328	7402
1820-0341	9094
1820-0352	904
1820-0398	910D
1820-0474	726
1820-0476	915
1820-0491	74145
1820-0495	7411
1820-0512	74H74
1820-0861	9946
1820-0862	9948
1820-0863	9158
1820-0864	7403
1820-0865	9944
1820-0869	9935
1820-0894	7404
1820-0995	7447
1820-1037	7446
1820-1038	7448
1820-1064	74164
1820-1068	74H30
1820-1111	7440
1820-1172	7416
1821-0001	912
1821-0002	912
1823	875
1826-0009	925
1826-0010	923
1826-0070	941D
1826-0044	725
1826-0075	914
1826-0166	910
1826-0346	928M
1826-0348	804
1827-17	102A
1835-17	199
1839-1(RCA)	612
1839-5(RCA)	612
1840-17	131
1841-17	123AP
1843-17	161
1844-17	159
1845-17	161
1846-17	177
1848-17	116
1849	116
1849R	116
1850	116
1850-0040	102
1850-0040-1	102
1850-0060	102
1850-0062	102
1850-0062-1	102
1850-0101	102
1850-0184	102
1850-0184-1	102
1850-17	159
1850R	116
1851-17	117
1852-17	108
1853-0001-1	159
1853-0041	129
1853-0045	129
1853-0069	106
1853-0081	159
1853-0089	159
1853-0215	129
1854-0003	123AP
1854-0005	123AP
1854-0060	199
1854-0090	128
1854-0090-1	128
1854-0022-1	128
1854-0033	123AP
1854-0490-1	181
1854-0231	161
1854-0245	181
1854-0265	175
1854-0274	128
1854-0332	128
1854-0353	123AP
1854-0387	199
1854-0432	123AP
1854-0438-1	124
1854-0498	128
1854-0563	130
1854-17	116
1854-SRK1-1	199
1855-17	116
1858	101
1858-0004	906
1858-0019	917
1858-0023	916
1858A	139A
1859-14	121
1859-16	121
1859-17	132
1859R	116
1865-1	160
1865-1-12	160
1865-1-127	160
1865-1L	160
1865-2	103A
1865-2-12	103A
1865-2L	103A
1865-2L8	103A
1865-4	101
1865-4-12	101
1865-4-127	101
1865-4L	101
1865-4L8	101
1865A	160
1865A-12	160
1865A-127	160
1865AL8	160
1865B	126
1865B-12	126
1865B-127	126
1865BL	126
1865BL8	126
1865C	121
1865C-12	121
1865C-127	121
1865CL	121
1865CL8	121
1866-1	102A
1866-1-12	102A
1866-1-127	102A
1866-1L	102A
1866-1L8	102A
1866-2	102A
1866-2-12	102A
1866-2-127	102A
1866-2L	102A
1866-2L8	102A
1866-3	102A
1866-3-12	102A
1866-3-127	102A
1866-3L	102A
1866-3L8	102A
1866-17	123AP
1867-17	159
1872-3	506
1872-5(RCA)	177
1872-6	177
1872-8(RCA)	177
1872-10(RCA)	178MP
1872-11(RCA)	109
1872-12(RCA)	177
1872-13(RCA)	177
1872-14(RCA)	177
1874-3	100
1874-3-12	100
1874-3-127	100
1874-3L	100
1874-3L8	100
1877A	105
1877A-12	105
1877A-127	105
1877AL	105
1877AL8	105
1877B	121MP
1877B-12	121MP
1877B-127	121MP
1877BL	121MP
1877BL8	121MP
1877C	121MP
1877C-12	121MP
1877C-127	121MP
1877CL	121MP
1877CL8	121MP
1878-3(RCA)	137A
1879-17	123AP
1879-17A	128
1880-17	108
1881-17	108
1882-17	123AP
1883-17	123AP
1884-17	123AP
1884A	121
1884A-12	121
1884A-127	121
1884AL	121
1884AL8	121
1885-17	154
1885-17(RECT)	116
1888B	160
1888B-12	160
1888B-127	160
1888BL	160
1888BL8	160
1888C	100
1888C-12	100
1888C-127	100
1888CL	100
1888CL8	100
1889-17	129
1890-17	108
1892-1	105
1892-1-12	105
1892-1-127	105
1892-1L	105
1892-1L8	105
1893-17	123AP
1893F	91
1898-3(RCA)	137A
1898-5(RCA)	136A
1898-7(RCA)	143A
1901-0028	5804
1901-0036	5804
1901-0045	5802
1901-0388	5804
1901-0389	5804
1901-0557	905
1901-1011	907
1906-17	103A
1907-6553	941D
1915-17	123AP
1916-17	195A
1917-17	102A
1919-17	102A
1919-17A	102A
1922-4(RCA)	112
1923-17	108
1923-17-1	108
1925-17	229
1929-17	123AP
1931-17	107
1931-17A	108
1932-17	123AP
1933-17	128
1934-17	132
1935-17	234
1936-17	175
1937-17	103A
1937-17(DIODE)	177
1940-17	159
1941-17	116
1945-17	131
1946-17	102A
1947-17	110MP
1948-17	507
1949-17	116
1950-17	116
1951-17	126
1952-17	161
1954-17	102A
1955-17	131
1956-17	109
1958-17	103A
1960-17	102A
1961-17	123AP
1966-17	123AP
1968-17	152
1969-17	152
1970-16	116
1970-17	116
1971-17	125
1972	123
1972-17	128
1973-17	102A
1974-17	102A
1977-17	109
1979-17	177
1979-808-10	159
1980-17	109
1981-17	177
1982-17	116
1983-17	108
1984-17	123AP
1993-2(FISHER)	123A
1998-17	107
1999	123AP
1999-17	107
2000-007	1082
2000-008	977
2000-017	1192
2000-031	1249
2000-101	312
2000-102	222
2000-103	222
2000-104	133
2000-105	312
2000-107	312
2000-111	312
2000-125	177
2000-201	290
2000-202	106
2000-203	123AP
2000-204	229
2000-205	229
2000-206	123AP
2000-207	295
2000-208	235
2000-209	192
2000-210	123AP
2000-211	235
2000-212	236
2000-213	229
2000-214	123AP
2000-215	195A
2000-216	152
2000-218	290
2000-221	130
2000-245	199
2000-258	199
2000-265	159
2000-266	199
2000-267	229
2000-268	107
2000-269	297
2000-270	295
2000-271	235
2000-275	229
2000-276	293
2000-301	109
2000-302	177
2000-303	177
2000-304	116
2000-305	139A
2000-308	139A
2000-309	614
2000-312	5075A
2000-317	177
2000-318	109
2000-320	116
2000-321	135A
2000-322	137A
2000-323	612
2000-324	137A
2000-325	138A
2000-326	5075A
2000-327	139A
2000-328	137A
2000-329	137A
2000-331	601
2000-332	519
2000-341	610
2000-344	612
2000-345	519
2000-348	156
2000-367	5016A
2001	152
2001(E.F.JOHNSON)	152
2001-17	123AP
2002	121
2002(E.F.JOHNSON)	121
2003	130
2003-17	123AP
2003JDP1	128
2004	158
2004(EFJOHNSON)	726
2004(TRANS)	102A
2004-01	107
2004-02	229
2004-03	123AP
2004-04	123AP
2004-05	123AP
2004-06	159
2004-14	123AP
2004-67	177
2005	121
2005-1	712
2005-2	712
2005-2981	519
2006	123AP
2006-1	722
2006-2	722
2006-17	5022A
2007-01	121
2007-1	708
2007-2	708
2007-3	708
2008	175
2008-1	725
2008-2	725
2008-17	123AP
2009	105
2010	105
2010(RECT)	5914
2010-01	177
2010-02	116
2010-03	177
2010-17	133
2010-5409	912
2011	184
2012	102
2012(E.F.JOHNSON)	102
2012-5472	923
2013(E.F.JOHNSON)	103A
2014-6684	941
2015	160
2015(RECT)	5914
2015-00	126
2015-1	130
2015-1A	130
2015-2	130
2015-2A	130
2015-3	130
2015-3A	130
2015-4	130
2015-5	130
2015-6	130
2015-7	130
2016P	2128
2017-107	159
2017-108	186
2017-109	152
2017-110	154
2017-111	116
2017-113	138A
2017-114	116
2017-115	123AP
2018-01	123AP
2019-45	519
2020	160
2020(RECT)	5896
2020-00	126
2020-01	132
2020-02	161
2020-03	316
2020-04	133
2020-05	199
2020-06	123AP
2020-07	159
2020-08	614
2020-1	703
2020-2	703
2020-2(FISHER)	159
2020-3	703
2020R	5897
2021	160
2021-00	126
2021-05	116
2021-17	5022A
2022-01	106
2022-03	229
2022-04	235
2022-05	123AP
2022-06	222
2022-07	109
2022-08	116
2022-244	123AP
2023-41	139A
2024-1	731
2025	5918
2025-1	730
2025-2	730
2025-3	730
2025-9110-18810	110MP
2026	123AP
2026-00	123AP
2026-4	241
2026-5	241
2026-6011	75452B
2027	123AP
2027(E.F.JOHNSON)	123AP
2027(R.F.)	195A
2027-00	123AP
2027R.F.	123AP
2028	108
2028-00	108

PART NUMBER	NTE REPLACEMENT
2030	5918
2030R	5919
2031-1	714
2031-17	116
2032-33	108
2032-34	108
2032-35	290
2032-36	132
2032-37	123AP
2032-38	4011B
2032-40	123AP
2035	5920
2035-5100-53660	199
2035-5100-69372	199
2036-58	153
2036-59	152
2036-68	909
2036-72	909
2036-93	909
2039-2	101
2040	5920
2040-17	140A
2041-01	229
2041-02	199
2041-03	186A
2041-04	235
2041-05	177
2041-06	139A
2042-17	102A
2043-17	159
2044-1	738
2044-17	123
2045	5922
2045-17	116
2047A2-288	102A
2048-17	199
2049-03	977
2049-32	614
2050	5922
2051-1(FISHER)	159
2051-5(FISHER)	159
2052	116
2053-5(FISHER)	159
2054-1(FISHER)	159
2056-04	1082
2056-05	973
2056-06	1160
2056-10	294
2056-75	312
2057A2-27	123AP
2057A2-28	102
2057A2-37	126
2057A2-48	124
2057A2-49	160
2057A2-60	126
2057A2-61	158
2057A2-62	123AP
2057A2-64	123AP
2057A2-65	126
2057A2-66	126
2057A2-80	126
2057A2-81	124
2057A2-84	124
2057A2-87	229
2057A2-103	123AP
2057A2-109	107
2057A2-110	107
2057A2-113	123AP
2057A2-116	107
2057A2-117	107
2057A2-117(OSC)	123AP
2057A2-117(RF-AMP)	123AP
2057A2-119	108
2057A2-120	107
2057A2-121	123AP
2057A2-122	123AP
2057A2-127	108
2057A2-128	107
2057A2-131	123AP
2057A2-133	121
2057A2-143	123AP
2057A2-145	123AP
2057A2-146	123AP
2057A2-147	102A
2057A2-148	102A
2057A2-149	160
2057A2-150	129
2057A2-151	128
2057A2-152	123AP
2057A2-153	123AP
2057A2-154	123AP
2057A2-155	123AP
2057A2-156	128
2057A2-157	161
2057A2-158	161
2057A2-159	160
2057A2-163	108
2057A2-165	102A
2057A2-166	160
2057A2-167	103A
2057A2-179	108
2057A2-180	161
2057A2-181	161
2057A2-182	159
2057A2-183	159
2057A2-184	123AP
2057A2-185	161
2057A2-187	161
2057A2-192	161
2057A2-193	161
2057A2-195	161
2057A2-196	161
2057A2-197	161
2057A2-198	159
2057A2-199	128
2057A2-200	106
2057A2-201	108
2057A2-202	161
2057A2-203	106
2057A2-204	161
2057A2-205	160
2057A2-206	102
2057A2-207	161
2057A2-208	123AP
2057A2-209	123AP
2057A2-210	102A
2057A2-211	131
2057A2-212	199
2057A2-215	123AP
2057A2-216	107
2057A2-217	107
2057A2-218	107
2057A2-219	107
2057A2-220	107
2057A2-221	107
2057A2-222	123AP
2057A2-223	124
2057A2-224	108
2057A2-225	123AP
2057A2-226	123AP
2057A2-227	123AP
2057A2-228	123AP
2057A2-229	106
2057A2-230	128
2057A2-231	160
2057A2-232	160
2057A2-234	128
2057A2-237	107
2057A2-241	102A
2057A2-249	199
2057A2-251	161
2057A2-252	160
2057A2-257	199
2057A2-258	161
2057A2-259	107
2057A2-260	199
2057A2-261	154
2057A2-262	199
2057A2-263	126
2057A2-264	123AP
2057A2-265	127
2057A2-272	199
2057A2-273	199
2057A2-274	199
2057A2-275	199
2057A2-276	123AP
2057A2-277	159
2057A2-278	123AP
2057A2-279	123AP
2057A2-280	123AP
2057A2-281	123AP
2057A2-284	128
2057A2-285	123AP
2057A2-288	102A
2057A2-289	123AP
2057A2-289(4TH IF)	233
2057A2-290	199
2057A2-294	123AP
2057A2-295	128
2057A2-296	123AP
2057A2-297	123AP
2057A2-298	159
2057A2-300	123AP
2057A2-301	152
2057A2-302	104
2057A2-303	123AP
2057A2-304	107
2057A2-305	107
2057A2-306	123AP
2057A2-307	159
2057A2-309	108
2057A2-310	108
2057A2-311	108
2057A2-313	108
2057A2-314	108
2057A2-316	123AP
2057A2-317	158
2057A2-319	123AP
2057A2-322	107
2057A2-323	107
2057A2-324	123AP
2057A2-325	107
2057A2-326	107
2057A2-329	102A
2057A2-331	107
2057A2-332	123AP
2057A2-333	199
2057A2-334	199
2057A2-341	123AP
2057A2-342	108
2057A2-343	159
2057A2-352	199
2057A2-353	159
2057A2-356	107
2057A2-359	159
2057A2-370	199
2057A2-373	199
2057A2-374	123AP
2057A2-385	199
2057A2-386	108
2057A2-387	123AP
2057A2-390	123AP
2057A2-391	199
2057A2-392	108
2057A2-393	108
2057A2-394	108
2057A2-395	107
2057A2-396	123AP
2057A2-397	159
2057A2-398	123AP
2057A2-399	123AP
2057A2-400	159
2057A2-401	123AP
2057A2-402	108
2057A2-403	159
2057A2-404	199
2057A2-405	199
2057A2-406	159
2057A2-412	123AP
2057A2-427	289
2057A2-428	199
2057A2-430	159
2057A2-432	229
2057A2-433	123AP
2057A2-434	123AP
2057A2-436	199
2057A2-445	132
2057A2-446	298
2057A2-448	108
2057A2-449	123AP
2057A2-452	123AP
2057A2-454	199
2057A2-457	159
2057A2-463	123AP
2057A2-464	123AP
2057A2-465	108
2057A2-466	107
2057A2-468	128
2057A2-475	199
2057A2-477	229
2057A2-478	229
2057A2-479	123AP
2057A2-480	193
2057A2-483	229
2057A2-484	293
2057A2-486	192
2057A2-487	123AP
2057A2-489	159
2057A2-501	107
2057A2-502	199
2057A2-503	107
2057A2-504	108
2057A2-505	108
2057A2-507	229
2057A2-508	229
2057A2-509	108
2057A2-510	123AP
2057A2-511	123AP
2057A2-518	199
2057A2-524	297
2057A2-526	229
2057A2-527	229
2057A2-529	234
2057A2-530	128
2057A2-539	107
2057A2-540	107
2057A2-541	229
2057A2-542	199
2057A2-543	199
2057A2-558	123AP
2057A2-559	123AP
2057A2-560	199
2057A2-561	106
2057A2-988	102A
2057A10-64	123AP
2057A32-25	1124
2057A32-26	1142
2057A32-33	801
2057A42-477	229
2057A100	130
2057A100-4(NPN)	103A
2057A100-4(PNP)	102A
2057A100-8	102A
2057A100-9	102A
2057A100-10	126
2057A100-14(NPN)	103A
2057A100-14(PNP)	102A
2057A100-15	102
2057A100-16	130MP
2057A100-17	128
2057A100-18(NPN)	103A
2057A100-18(PNP)	102A
2057A100-21	102A
2057A100-23	158
2057A100-24	102A
2057A100-26	130MP
2057A100-30(NPN)	103A
2057A100-30(PNP)	158
2057A100-34	158
2057A100-35(NPN)	103A
2057A100-35(PNP)	158
2057A100-40(NPN)	192
2057A100-40(PNP)	193
2057A100-41	158
2057A100-44	158
2057A100-45(NPN)	186
2057A100-45(PNP)	187
2057A100-47(NPN)	184
2057A100-47(PNP)	185
2057A100-48	158
2057A100-49	184
2057A100-50(NPN)	186
2057A100-50(PNP)	187
2057A100-51	159
2057A100-53	107
2057A100-55	102A
2057A100-58(NPN)	184
2057A100-58(PNP)	185
2057A100-62(NPN)	293
2057A100-62(PNP)	294
2057A100-66(NPN)	184
2057A100-66(PNP)	185
2057A100-67	297
2057A100-69(NPN)	289
2057A100-69(PNP)	290
2057A289	128
2057A-120	108
2057A-288	102
2057A-429	108
2057A-430	106
2057B2-4	102
2057B2-14	108
2057B2-23	102A
2057B2-27	123AP
2057B2-28	102A
2057B2-29	102A
2057B2-32	102
2057B2-34	102
2057B2-35	126
2057B2-37	126
2057B2-38	123AP
2057B2-41	126
2057B2-42	126
2057B2-43	102
2057B2-44	102
2057B2-45	102
2057B2-46	103
2057B2-47	124
2057B2-48	126
2057B2-49	102
2057B2-50	126
2057B2-51	126
2057B2-52	102A
2057B2-57	102
2057B2-58	124
2057B2-59	123
2057B2-60	126
2057B2-61	158
2057B2-62	123AP
2057B2-63	123
2057B2-64	108
2057B2-65	126
2057B2-66	126
2057B2-67	126
2057B2-68	126
2057B2-69	123AP
2057B2-70	126
2057B2-71	126
2057B2-72	102
2057B2-73	123
2057B2-77	126
2057B2-78	102
2057B2-79	126
2057B2-80	126
2057B2-81	126
2057B2-83	102
2057B2-84	124
2057B2-85	108
2057B2-86	102
2057B2-87	108
2057B2-88	126
2057B2-89	160
2057B2-90	160
2057B2-93	160
2057B2-94	102A
2057B2-97	123AP
2057B2-99	102A
2057B2-101	107
2057B2-102	107
2057B2-103	108
2057B2-104	126
2057B2-105	126
2057B2-107	102A
2057B2-108	108
2057B2-109	108
2057B2-110	108
2057B2-111	108
2057B2-112	108
2057B2-113	123AP
2057B2-114	107
2057B2-115	107
2057B2-116	107
2057B2-117	107
2057B2-118	126
2057B2-119	108
2057B2-120	108
2057B2-121	123AP
2057B2-122	123AP
2057B2-123	123AP
2057B2-124	102A
2057B2-125	107
2057B2-127	108
2057B2-128	108
2057B2-129	102A
2057B2-130	123AP
2057B2-133	121
2057B2-134	127
2057B2-135	102A
2057B2-136	127
2057B2-137	102A
2057B2-138	161
2057B2-139	161
2057B2-140	154
2057B2-141	126
2057B2-142	102A
2057B2-143	107
2057B2-149	160
2057B2-150	153
2057B2-151	152
2057B2-152	123AP
2057B2-153	123AP
2057B2-154	123AP
2057B2-155	123AP
2057B2-157	160
2057B2-158	160
2057B2-159	160
2057B2-160	108
2057B2-161	108
2057B2-162	108
2057B2-192	161
2057B2-206	102A
2057B2A2-118	160
2057B45-14	102A
2057B100-1	102A
2057B100-3(NPN)	103A
2057B100-3(PNP)	102A
2057B100-4	103A
2057B100-5(NPN)	103A
2057B100-5(PNP)	102A
2057B100-6	102A
2057B100-7	102
2057B100-8	102A
2057B100-9	102A
2057B100-11	131
2057B100-12	108
2057B100-13	102A
2057B100-16	130MP
2057B100-17	128
2057B101-4	123AP
2057B102-4	123AP
2057B103-4	123AP
2057B104-8	154
2057B106-12	159
2057B107-8	128
2057B108-6	159
2057B109-9	128
2057B110-9	129
2057B111-9(NPN)	128
2057B111-9(PNP)	129
2057B112-9	129
2057B113-9	128
2057B114-9	129
2057B115-9	129
2057B116-9	129
2057B117-9	123AP
2057B118-12	123AP
2057B119-2	123AP
2057B120-12	123AP
2057B121-9	129
2057B122-9	129
2057B123-10	124
2057B124-10	121
2057B125-9	123AP
2057B126-12	128
2057B129-9	128
2057B141-4	123AP
2057B142-4	123AP
2057B143-12	123AP
2057B144-12	128
2057B145-12	129
2057B146-12	123AP
2057B147-12	159
2057B149-12	133
2057B151-6	123AP
2057B152-12	123AP
2057B153-9	128
2057B155-10	175
2057B156-9	128
2057B157-9	162
2057B158-10	175
2057B159-12	159
2057B163-12	129
2057B168	102A
2057B169	102A
2057B175-9	162
2057B186	160
2057B206	102A
2057B-2	100
2057B-59	199
2057B-84	124
2057B-85	123AP
2057B-113	108
2057B0-3(NPN)	103A
2057B0-3(PNP)	102A
2057S2-276	123AP
2058	126
2058-02	312
2058-5(FISHER)	183
2060	5924
2060-024	116
2061-1	783
2061-42	977
2061-45	614
2061A45-38	177
2061A45-47	102
2061A45-72	116
2061A45-93	177
2061B45-14	158
2061B45-35	116
2062-17	237
2062-17A	237
2063-5(FISHER)	159
2063-17	199
2063-17-12	123AP
2064	123AP
2064(CROWN)	123AP
2064-5(FISHER)	248
2064-17	5072A
2065-03	123AP
2065-04	229
2065-06	235
2065-07	123AP
2065-08	519
2065-17	177
2065-52	977
2065-54	199
2065-55	222
2066-17	177
2070	5928
2071	181
2074-17	132
2075-1	801
2076	177
2076-1	742
2077-07	109
2077-1	788
2079-40	222
2079-42	5072A
2079-93	139A
2080	5928
2081-6	153
2081-17	186
2082-6	152
2084-17	125
2085-17	184
2087-46	139A
2090	171
2090(CROWN)	154
2090A43-1	112
2090A53-2	120
2091-02	1081A
2091-49	1006
2091-50	1005
2093A2-289	108
2093A3D-2	117
2093A3D-20	131
2093A4-2	117
2093A5-10	113A
2093A6-1	117
2093A6-2	117
2093A8-1	109
2093A9-3	100
2093A9-4	100
2093A12-1	116
2093A25-3	109
2093A33-1	109
2093A38-1	109
2093A38-4	116
2093A38-5	109
2093A38-8	614
2093A38-10	109
2093A38-11	177
2093A38-13	116
2093A38-14	109
2093A38-15	109
2093A38-16	139A
2093A38-21	109
2093A38-22	110MP
2093A38-23	102
2093A38-24	128
2093A38-27	109
2093A38-28	116
2093A38-29	614
2093A38-30	109
2093A38-31	109
2093A38-32	109
2093A38-33	109
2093A38-34	109
2093A38-35	110MP
2093A38-37	177
2093A38-40	109
2093A39-12	142A
2093A41	109
2093A41-2	109
2093A41-5	614
2093A41-6	125
2093A41-8	116
2093A41-14	109
2093A41-16	139A
2093A41-23	614
2093A41-24	139A
2093A41-24A	139A
2093A41-25	614
2093A41-27	614
2093A41-28	125
2093A41-29	110MP
2093A41-38	109
2093A41-40	102
2093A41-41	102
2093A41-42	125
2093A41-43	125
2093A41-45	116
2093A41-49	116
2093A41-50	109
2093A41-51	116
2093A41-53	138A
2093A41-54	116
2093A41-55	116
2093A41-56	142A
2093A41-57	116
2093A41-59	109
2093A41-60	142A
2093A41-61	116
2093A41-62	116
2093A41-63	135A
2093A41-65	125
2093A41-66	116
2093A41-67	506
2093A41-68	109
2093A41-69	506
2093A41-70	5071A
2093A41-72	506
2093A41-73	506
2093A41-74	503
2093A41-75	116
2093A41-76	177
2093A41-77	125
2093A41-78	116
2093A41-79	614
2093A41-81	116
2093A41-82	5022A
2093A41-84	116
2093A41-85	5079A
2093A41-86	116
2093A41-87	158
2093A41-88	116
2093A41-89	116
2093A41-90	135A
2093A41-91	614
2093A41-92	109
2093A41-95	614
2093A41-96	506
2093A41-101	614
2093A41-102	177
2093A41-103	116
2093A41-104	116
2093A41-105	177
2093A41-108	116
2093A41-110	116
2093A41-112	167
2093A41-113	143A
2093A41-115	116
2093A41-116	116
2093A41-117	614
2093A41-126	116
2093A41-129	177
2093A41-130	614
2093A41-131	116
2093A41-139	116
2093A41-141	109
2093A41-148	109
2093A41-150	150A
2093A41-151	116
2093A41-152	116
2093A41-153	5070A
2093A41-154	109
2093A41-155	177
2093A41-156	177
2093A41-157	614
2093A41-158	177
2093A41-159	139A
2093A41-161	614
2093A41-162	614
2093A41-163	139A
2093A41-164	177
2093A41-165	177
2093A41-166	614
2093A41-167	109
2093A41-169	109
2093A41-171	177
2093A41-172	177
2093A41-173	116
2093A41-180	116
2093A41-181	109
2093A41-182	116
2093A41-185	116
2093A41-186	139A
2093A41-187	109
2093A41-189	116
2093A41-193	614
2093A41-194	135A
2093A41-196	109
2093A41-197	116
2093A41-200	614
2093A42-7	116
2093A43-2	112
2093A52-1	125
2093A57-1	118
2093A59-1	112
2093A69-1	125
2093A71-1	125
2093A75-1	120
2093A77-1	109
2093A78-1	125
2093A79-6	125
2093A80-1	142A
2093B4-6	116
2093B11-21	110MP
2093B38-4	177
2093B38-9	112
2093B38-14	116
2093B41-6	116
2093B41-8	116
2093B41-9	116
2093B41-10	116
2093B41-11	109
2093B41-12	116
2093B41-14	116
2093B41-16	139A
2093B41-18	116
2093B41-20	116
2093B41-21	116
2093B41-22	116
2093B41-23	614
2093B41-24	139A
2093B41-25	116
2093B41-27	614
2093B41-28	116
2093B41-29	110MP
2093B41-32	116
2093B41-33	174
2093B41-34	116
2093B41-35	116
2093B41-37	116
2093B41-62	116
2101	199
2101-03	177
2102	116
2102-010	109
2102-014	116
2102-017	116
2102-025	109
2102-028	109
2102-029	177
2102-031	614
2102-032	139A
2102-074	116
2102-120	160

PART NUMBER	NTE REPLACEMENT
2102-124	160
2105	614
2106-17	5070A
2106-119	102A
2106-120	160
2106-121	102A
2106-122	102A
2106-123	102A
2106-124	109
2107(RAM)	2107
2107A	2107
2109-101-5304	1410
2109-103-2006	712
2109-103-2200	1545
2109-103-3001	1547
2109-301-6600	1759
2109-301-6707	1758
2110	5914
2110N-41	177
2110N-42	116
2110N-132	161
2110N-133	161
2110N-134	175
2111A	708
2112-17	102A
2113	113A
2114-0	154
2114-17	158
2114-30L	2114
2114L	2114
2115	5916
2115R	5917
2116-17	116
2119-101-0500	712
2119-101-1204	1004
2119-101-1301	1128
2119-101-4306	712
2119-101-5107	1440
2119-101-5204	1416
2119-101-9408	1545
2119-101-9709	1547
2119-102-5100	1440
2119-102-5401	1417
2119-103-0603	615P
2119-201-1300	834
2119-202-0803	1140
2119-601-5005	1741
2119-5702	1674
2120-17	5075A
2121-17	199
2122-3	172A
2122-17	109
2125	5918
2127-17	161
2130	5918
2131-101-4005	159
2132	186
2132(GE)	123AP
2132-17	199
2134-17	313
2134-103-9006	85
2135	5920
2136	737
2136D	737
2136P	737
2136PC	737
2138-17	161
2139-101-4005	159
2139-101-4102	290A
2139-101-4209	290A
2139-101-5301	290A
2139-103-2807	159
2139-103-3307	159
2139-103-3404	290A
2139-103-3802	290A
2139-103-4001	290A
2139-103-4302	159
2139-103-7006	129P
2139-103-7103	129
2139-103-8904	85
2139-103-9006	85
2139-103-9608	290A
2139-103-9705	290
2139-301-0401	108
2139-301-0508	229
2139-301-0906	85
2139-301-1406	399
2139-301-1901	233
2139-301-2304	198
2139-301-5202	399
2139-301-5309	399
2139-301-5406	399
2139-301-5503	24
2139-301-5600	24
2139-301-7707	85
2139-301-8508	289A
2139-301-9606	107
2139-301-9606(BCE)	107
2139-301-9804	123AP
2139-302-4501	107
2139-302-6501	199
2139-302-7001	85
2139-302-7406	199
2139-302-7409	85
2139-302-7700	198
2139-302-8103	375
2139-304-2808	108
2139-304-3405	107
2139-304-5609	289A
2139-304-5706	289A
2139-304-9104	107
2139-304-9308	107
2139-304=3405	107
2139-305-3408	399
2139-305-9301	399
2139-307-2506	108
2139-307-2603	229
2139-308-0305	229
2139-401-5308	159
2139-401-8507	389
2139-401-9609	165
2139-401-9808	287
2145	5922
2148-17	116
2149-101-0505	187
2149-101-8308	192A
2149-101-8505	398
2149-101-9005	290A
2149-101-9102	193
2149-101-9209	159
2149-101-9306	159
2149-102-0207	187A
2149-102-1105	187A
2149-201-4601	398
2149-202-0400	298
2149-202-0507(EBC)	294
2149-202-0507(ECB)	294
2149-301-0309	287
2149-301-1605	94
2149-301-4309	128
2149-301-4804	238
2149-301-8901	287
2149-301-9100	289A
2149-301-9508	289A
2149-302-0603	384
2149-302-0807	289A
2149-302-1307	389
2149-302-4205	152
2149-302-4302	186A
2149-302-6904	198
2149-302-8501	289A
2149-302-9103	376
2149-302-9608	396
2149-302-9802	198
2149-303-3805	229
2149-303-4402	389
2149-303-5805	157
2149-303-7300	198
2149-303-8004	157
2149-303-8402	198
2149-304-3109	175
2149-310-0103	287
2149-401-404	379
2149-401-1206	293
2149-401-1303(EBC)	293
2149-401-1303(ECB)	293
2149-401-5905	384
2149-401-8007	198
2149-401-8201	123AP
2149-401-8308	192A
2149-401-9206	375
2149-401-9507	375
2149-401-9701	287
2149-401-9808	373
2149-401-9905	287
2149-404-0200	89
2149-404-0307	89
2150	5922
2150-17	139A
2151-17	109
2152	116
2158-1541	123AP
2158-1558	159
2159-101-0607	290A
2159-301-0207	85
2159-301-0304	399
2159-301-1406	289A
2159-301-1707	289A
2159-301-1804	123AP
2159-301-2906	399
2159-302-1707	123AP
2160	6400
2160-17	186
2161-17	5072A
2163-17	175
2164	4164
2164-15	4164
2164-25	4164
2167-17	237
2167-406-4804	519
2168-17	186
2169-101-0602	109
2169-103-0608	177
2169-201-0708	552
2169-201-0805	116
2169-202-1900	109
2169-202-2002	177
2169-202-2109	177
2169-202-2206	552
2169-202-2303	506
2169-202-2400	552
2169-202-2604	177
2169-205-0700	519
2169-205-0807	519
2169-205-1006	5018A
2169-205-3404	552
2169-206-1106	552
2169-206-1203	552
2169-207-1109	125
2169-207-1206	506
2169-208-1708	552
2169-208-5102	552
2169-208-5306	125
2169-209-1105	116
2169-210-5808	125
2169-213-1108	525
2169-218-1307	552
2169-219-0807	519
2169-219-3106	552
2169-219-4207	552
2169-219-4208	552
2169-219-5106	116
2169-301-1100	519
2169-301-2901	177
2169-301-9207	519
2169-401-41-04	5070A
2169-401-4104	5070A
2169-403-2401	146A
2169-403-5600	5013A
2169-403-7303	5021A
2169-403-7503	5021A
2169-403-7707	5025A
2169-404-1807	5013A
2169-404-1904	5015A
2169-404-4006	5010A
2169-406-4808	519
2169-408-0600	5022A
2169-408-0804	5012A
2170	5928
2179-001-0200	5465
2179-001-1302	6402
2180-17	109
2180-41	177
2180-151	108
2180-152	108
2180-153	123AP
2180-154	123AP
2180-155	175
2181-17	290
2182-17	116
2195-17	199
2196-17	109
2197-17	107
2198-17	116
2199-17	116
2200-17	116
2202-17	186
2203	5072A
2203-17	5072A
2203CP	2013
2204-17	123
2205	614
2205-17	614
2206	116
2206-17	116
2207-17	199
2208-17	128
2209-17	177
2210-17	152
2211-17	153
2211B	116
2212-17	199
2213-17	107
2214-17	229
2215	175
2215-17	160
2218-17	614
2220-17	159
2222	123A
2222A	123A
2224-17	229
2225	85
2225-17	229
2226-17	229
2231	159
2231-17	178MP
2232-17	109
2233-17	116
2243	121
2244-1	187
2245-17	186
2246-17	192
2252	116
2261	123AP
2263	123AP
2269	159
2270	123AP
2270-5	128
2271	199
2272	159
2275-17	123AP
2279-13	109
2280-13	109
2281-13	109
2282-13	109
2282-17	109
2282-17(RAT.DET)	110MP
2283-13	109
2283-17	116
2284-13	109
2284-17	107
2285-17	116
2289-13	178MP
2290-13	109
2290-17	123AP
2291-17	107
2295	175
2300.036.096	159
2302	116
2302-17	233
2304	177
2309	139A
2312-17	184
2315-046	116
2319-17	116
2320-17	123AP
2321-17	123AP
2322-17	315
2323-17	136A
2328	177
2328-17	177
2330-021	138A
2330-191	125
2330-201	125
2330-252	125
2332-374	2716
2332/2716	2716
2334-17	186
2335-17	132
2336-17	312
2337-17	123AP
2338-17	199
2339-17	5072A
2340-17	315
2341-17	5071A
2343-17	5072A
2347-17	104
2359-17	222
2361-17	123AP
2362-1	123AP
2362-1(SYLVANIA)	108
2362-17	136A
2381-17	159
2382-17	152
2396-17	145A
2399-17	235
2400-17	177
2400-23	116
2400-27	116
2402	116
2402-17	614
2402-453	102A
2402-454	102A
2402-455	102A
2402-456	131
2402-457	102A
2402-459	109
2402-461	116
2402-462	116
2402-463	116
2403	177
2405	177
2405-453	102A
2405-454	102A
2405-455	102A
2405-456	102A
2405-457	102A
2405-458	109
2405-459	116
2405-462	116
2405-463	116
2408-17	186A
2408-326	102A
2408-328	102A
2408-329	158
2408-330	109
2408-331	116
2409-17	519
2410-17	116
2411	116
2411-17	125
2415-4(RCA)	112
2417	124
2418-17	237
2420SLM339N	834
2420SN07406	7406
2420SN07407	7407
2420SN75188	75188
2420SN75189	75189
2420SNLS151	74LS151
2420SNNE555	955M
2420SNS412N	8212
2421T05Z24Y	5031A
2421T05Z39X	5007A
2421T1Z1300	143A
2421T1Z1500	145A
2421T1Z2000	5079A
2421T2B4B41	5312
2421T5B4B41	5312
2421TS5277B	116
2422TA1015Y	290A
2422TC1815Y	85
2422TD71700	390
2422TD717000	390
2427	107
2427(RCA)	108
2437-17	236
2443	107
2443(RCA)	123AP
2444(RCA)	124
2445	108
2445(RCA)	711
2445-1(RCA)	711
2446	123AP
2446(RCA)	123AP
2446-1(RCA)	121
2447	123AP
2447(RCA)	123AP
2448	107
2448(RCA)	159
2448-17	319P
2449-17	123AP
2450	108
2450(RCA)	108
2450-1	108
2450-17	312
2451-17	5072A
2452-17	139A
2454-17	125
2460-13	116
2460-14(RCA)	156
2470-1724	74H01
2470-1732	74H05
2472-5632	123AP
2473	123AP
2473(RCA)	108
2473-2109	7408
2474	154
2474(RCA)	154
2475	107
2475(RCA)	123AP
2476	123AP
2476(RCA)	108
2477	123AP
2477(RCA)	108
2477-173	519
2478	126
2478A	126
2478B	126
2482	126
2482(RCA)	129
2487B	160
2488	126
2488A	126
2489	126
2489A	160
2490	102A
2490A	102A
2491	124
2491A	124
2491B	124
2494	127
2494(RCA)	127
2495	128
2495(RCA)	123AP
2495-080	102A
2495-012	126
2495-013	126
2495-014	102A
2495-078	160
2495-079	160
2495-082	160
2495-1(RCA)	127
2495-166-1	108
2495-166-2	123AP
2495-166-4	108
2495-166-8	108
2495-166-9	108
2495-200	126
2495-376	160
2495-377	160
2495-378	160
2495-388	102A
2495-488-1	160
2495-488-2	160
2495-489	125
2495-520	108
2495-521	108
2495-522-1	108
2495-522-4	123AP
2495-523-1	108
2495-529	123AP
2495-567-2	102A
2495-567-3	102A
2495-586-2	102A
2496	127
2496(RCA)	127
2496-125-2	123AP
2497-473	102A
2497-496	102A
2498-163	128
2498-507-2	108
2498-507-3	108
2498-508-2	108
2498-508-3	108
2498-513	125
2498-903-2	108
2498-903-3	108
2500	127
2500(RCA)	127
2501	171
2502	129
2502(RCA)	102A
2510-31	109
2510-32	116
2510-101	229
2510-102	229
2510-103	199
2510-104	123AP
2510-105	186
2515	85
2516	712
2516(RCA)	712
2516-1	712
2516-1(RCA)	712
2522	116
2523	116
2539	123AP
2546	107
2546(RCA)	123AP
2548A0157	124
2549	219
2554-1	730
2554-1(RCA)	730
2554-2	730
2554-2(RCA)	730
2554-3	730
2554-3(RCA)	730
2554-4	730
2554-4(RCA)	730
2577	121
2584	123
2603	289A
2603-180	102A
2603-181	102A
2603-182	102A
2603-183	126
2603-184	123AP
2603-186	109
2603E	289A
2603F	289A
2606-286	102A
2606-287	102A
2606-288	176
2606-291	102A
2606-292	126
2606-294	108
2606-295	160
2606-296	109
2606-297	614
2606-299	116
2606-303	5069A
2612	102A
2620	154
2626-1	912
2633(RCA)	108
2634	107
2634(RCA)	108
2634-1	108
2634-1(RCA)	107
2634-2	107
2634-2(RCA)	107
2634-3	107
2634-3(RCA)	229
2634-4	107
2636	108
2654-1(RCA)	229
2663	172A
2664-1	726
2665-1	723
2665-2	723
2665-3	723
2667	229
2671R	3074
2673R	3076
2674R	3075
2675R	3077
2676R	3078
2678R	3079
2700	160
2703-384	102A
2703-385	102A
2703-386	102A
2703-387	176
2703-388	158
2703-389	109
2703-390	116
2704	109
2704-384	102A
2704-385	102A
2704-386	102A
2704-387	158
2704-388	109
2704-389	116
2708	2708
2716	2716
2716-HM1-C2	2716
2716-HM2-C2	2716
2716C	2716
2732	2732A
2732-45	2732A
2732A	2732A
2732A-2	2732A
2732A-2(INTEL)	2732A
2732A-3(INTEL)	2732A
2732A-4(INTEL)	2732A
2732A-20(INTEL)	2732A
2732A-30(INTEL)	2732A
2732A-45(INTEL)	2732A
2732D	2732A
2762	116
2763	116
2764	2764
2764-2	2764
2764-3	2764
2764-4	2764
2764-25	2764
2764-30	2764
2764-45	2764
2764-200	2764
2764-250	2764
2764-300	2764
2764-450	2764
2766	116
2774	135A
2777	116
2779	116
2780	121
2780(AIRLINE)	121MP
2780-3	121MP
2780-4	121
2780-5	121
2781	102
2784	116
2786	116
2787	123AP
2789	109
2791	126
2794	116
2795	199
2795A	139A
2796	199
2797	199
2798	192
2799	290
2799-1	789
2799-2	789
2800	123AP
2802	125
2842-056	175
2842-875	181
2853-1	186
2853-2	152
2853-3	186
2854	123AP
2854-1	186
2854-2	152
2854-3	186
2855-1	186
2855-2	152
2855-3	186
2856-1	186
2856-2	152
2856-3	186
2870	188
2873	193
2874	159
2874(RCA)	726
2874(SEARS)	726
2875-1	182
2875-2	183
2875-3	392
2900-007	108
2901	834SM
2901(SM)	834SM
2901-010	121
2903D	943M
2904-003	123AP
2904-008	121
2904-030	224
2904-014	121
2904-016	126
2904-029	126
2904-032	128
2904-033	108
2904-034	123
2904-035	123
2904-037	195A
2904-038	159
2904-038H05	100
2904-045	199
2904-053	229
2904-054	199
2904-057	184
2904-058	188
2904-059	195A
2904-061	235
2904D	928M
2906-005	746
2907	159
2925	123AP
2925(E.F.#JOHNSON)	123AP
2925(E.F.JOHNSON)	123AP
2957A100-25	175
2983-36	2102
3001	108
3001A	116
3001F	5529
3001G	5530
3001H	5531
3002	108
3003	107
3003(SEARS)	107
3004(SEARS)	107
3004-856	102A
3005(SEARS)	123AP
3005-861	123AP
3006(SEARS)	123AP
3007(SEARS)	123AP
3008	160
3008(CB)	126
3009	126
3009(MIXER)	126
3009(SEARS)	102A
3010	126
3010(E.F.JOHNSON)	126
3010(IF)	126
3010(SEARS)	102A
3011	123AP
3011(E.F.JOHNSON)	123A
3012	106
3012(EFJOHNSON)	106
3012(NPN)	108
3012(PNP)	159
3012(SEARS)	176
3013	102
3013(SEARS)	176
3014	102
3014(SEARS)	102A
3016B	601
3017	159
3017(E.F.JOHNSON)	159
3018	108
3019	159
3019(EFJOHNSON)	126
3020	108
3021	108
3022	128
3023	161
3024	160
3024(E.F.JOHNSON)	160
3024-1(RCA)	123A
3025	160
3026	123AP
3027	161
3028	108
3029	107
3029(PNP)	129
3030	27
3034	128
3034(RCA)	128
3052(ZENER)	5035A
3052P	1934
3052V(VLTG REG)	1934X
3054	175
3055-1	130
3055-3	130
3064T	780

PART NUMBER	NTE REPLACEMENT
3064TC	780
3065D	712
3065E	712
3068	123AP
3069	116
3069(ARVIN)	116
3074A20	116
3074A21	116
3075D	723
3075DC	723
3075E	723
3075PC	723
3105	5980
3107-108-4040X	530
3107-108-4050X	523
3107-108-40401	530
3107-108-40404	530
3107-108-40501	523
3107-204-9000	123AP
3107-204-90010	123AP
3107-204-90020	123AP
3107-204-90070	121
3107-204-90080	108
3107-204-90100	107
3107-204-90140	104
3107-204-90150	199
3107-204-90180	210
3107-204-90182	152
3107-204-90190	104
3110	5982
3110R	5983
3111	123AP
3112	102A
3113	123AP
3115	5986
3115R	5987
3120	5986
3120R	5987
3122P	1936
3125	5988
3125R	5989
3130	5988
3130-3167-910	823
3130-3193-501	7445
3130-3193-507	74145
3130-3193-512	787
3130-3248-801	1115
3130R	5989
3135	5990
3135/709	708
3136/5072A	5072A
3140	5990
3140R	5991
3145	5992
3146-977	130
3150	5992
3150R	5993
3152-159	175
3152-170	130
3155	172A
3156	377
3160	5994
3161	3098
3165	6402
3170	5998
3176	199
3177	159
3180	5998
3182	194
3189	378
3190(HARMON-KARDON)	181
3202-5H01	128
3202-51-01	128
3212(HARMON-KARDON)	123AP
3216	8216
3216(INTEL)	8216
3221(HARMON-KARDON)	123AP
3222	129
3223	128
3223(HARMON-KARDON)	128
3223-1(RCA)	614
3224B	412
3225	6030
3225R	6031
3227-E	108
3235	5990
3245	5992
3251	121
3270	5998
3280	5998
3295-001	124
3301(SEARS)	107
3322-6	109
3327-1	289A
3341	123AP
3367	172A
3370	108
3373	181
3377	116
3383	172A
3391	199
3391(SEARS)	199
3391-1(RCA0	108
3391-1(RCA)	108
3391A	199
3391A(SEARS)	199
3400-2412-3	903
3425	100
3434	100
3435	100
3438	133
3440	159
3443-1	123AP
3456	176
3458	160
3476	154
3476(RCA)	161
3492	123AP
3499	130
3500	100
3501	128
3502(RCA)	704
3502-1(RCA)	704
3502-2(RCA)	704
3503	124
3503(RCA)	124
3504	102
3504(RCA)	160
3505	109
3505(AIRLINE)	178MP
3505(RCA)	123AP
3506	143A
3506(RCA)	123AP
3507	128
3507(RCA)	102A
3507(SEARS)	107
3507(WARDS)	123AP
3508	128
3508(RCA)	123AP
3508(SEARS)	161
3508(WARDS)	108
3508-1	128
3508-1(RCA)	128
3509	108
3509(SEARS)	123AP
3509(WARDS)	123AP
3510	123AP
3510(RCA)	123AP
3510(SEARS)	108
3510(WARDS)	108
3511	108
3511(SEARS)	132
3511(WARDS)	132
3512	121
3512(RCA)	132
3512(SEARS)	132
3512(WARDS)	132
3513	159
3513(RCA)	123AP
3513(SEARS)	159
3513(WARDS)	159
3514	121
3514(RCA)	127
3514(SEARS)	107
3514(WARDS)	123AP
3514-1(RCA)	127
3515	104
3515(RCA)	121
3516	121
3516(RCA)	161
3516(WARDS)	108
3516-1(RCA)	159
3517	102A
3518	107
3518(RCA)	161
3519	123AP
3519(RCA)	123AP
3519-1	123AP
3519-1(RCA)	199
3519-2	161
3520	124
3520(DIODE)	142A
3520(RCA)	124
3520(TRANS)	124
3520(WARDS)	142A
3520-1	124
3521	128
3521(SEARS)	123AP
3521-1	107
3521-1(RCA)	108
3522	106
3522(SEARS)	159
3523	192
3523(RCA)	129
3523(SEARS)	123AP
3524	108
3524(RCA)	108
3524(SEARS)	159
3524-1	108
3524-1(RCA)	108
3524-2	107
3524-2(RCA)	108
3524PC	1720
3525	187
3525(RCA)	123AP
3525(SEARS)	185
3526	123AP
3526(RCA)	123AP
3526(SEARS)	184
3526-1	123AP
3526-1(RCA)	123AP
3527	107
3527(RCA)	108
3527-1	107
3527-1(RCA)	108
3529	116
3529A	156
3529B	156
3529C	156
3530	108
3530(RCA)	108
3530-1	108
3530-1(RCA)	108
3530-2	108
3530-2(RCA)	108
3530-3	108
3531-030-000	788
3531-021-000	7413
3531-022-000	74190
3531-023-000	74141
3532	123AP
3532(RCA)	123AP
3532-1	128
3533	722
3533(RCA)	129
3533-1	129
3533-1(RCA)	159
3534	160
3534(RCA)	160
3535	123AP
3535(RCA)	161
3535-1	319P
3535-1(RCA)	319P
3536	123AP
3536(RCA)	123AP
3536-1	123AP
3536-2	161
3537	233
3537(RCA)	108
3537-1	233
3537-1(RCA)	233
3538	123AP
3538(RCA)	123AP
3538-1	123AP
3538-1(RCA)	123AP
3538-7	230
3538-8	231
3539	123AP
3539(RCA)	108
3539-1	123AP
3539-1(RCA)	123AP
3539-307-001	108
3539-307-002	108
3539-(RCA)	123AP
3540	159
3540(RCA)	159
3540-1	159
3540-1(GE)	159
3540-1(RCA)	159
3541	123AP
3541(RCA)	123AP
3541-1	123AP
3541-1(RCA)	123AP
3543	123AP
3543(RCA)	123AP
3543-1	123AP
3543-1(RCA)	123AP
3544	102A
3544(RCA)	128
3544-1	123AP
3544-1(RCA)	123AP
3545	128
3545(RCA)	154
3546	123AP
3546(RCA)	123AP
3546-1	123AP
3546-1(RCA)	123AP
3546-2(RCA)	123AP
3547	128
3547(RCA)	225
3548	123AP
3548(RCA)	123AP
3548-1	123AP
3548-1(RCA)	123AP
3549	159
3549(RCA)	159
3549-1	106
3549-1(RCA)	159
3549-2	106
3549-2(RCA)	159
3550	158
3551	126
3551(RCA)	123AP
3551-1(RCA)	123AP
3551A	126
3551A(BLU)	126
3551A(RCA)	123AP
3551A-BLU	126
3551A-GRN	126
3552	225
3552(RCA)	154
3552-1	154
3552-1(RCA)	191
3553	225
3553(RCA)	154
3553-1(RCA)	154
3553-3	128
3554	123AP
3554(RCA)	123AP
3554-1	123AP
3554-1(RCA)	123AP
3555	128
3555(RCA)	123AP
3555-01	5547
3555-02	5547
3555-03	5547
3555-1(RCA)	128
3555-3	128
3556	123AP
3556(RCA)	123AP
3556-1	123AP
3556-1(RCA)	123AP
3558	123AP
3558(RCA)	123AP
3558-1(RCA)	222
3559	159
3559(RCA)	159
3559-1	159
3560	123AP
3560(RCA)	123AP
3560-1	128
3560-1(RCA)	107
3560-2	128
3560-2(RCA)	123AP
3561	123AP
3561(RCA)	123AP
3561-1	128
3561-1(GE)	128
3561-1(RCA)	123AP
3562	159
3562(RCA)	159
3562-1(RCA)	159
3563	159
3563(RCA)	159
3563-1(RCA)	159
3564(RCA)	162
3564-1(RCA)	369
3565	124
3565(RCA)	128
3565-1	123AP
3565-1(RCA)	123AP
3566	124
3566(RCA)	128
3566-1	123AP
3566-1(RCA)	123AP
3567	128
3567(RCA)	124
3567-1	128
3567-1(RCA)	128
3567-2	152
3567-2(RCA)	157
3567-4(RCA)	152
3568	161
3568(RCA)	108
3568(WARDS)	108
3568-1(RCA)	229
3569	161
3569(RCA)	123AP
3569-1	123AP
3569-1(RCA)	123AP
3570	159
3570(RCA)	159
3570-1	159
3570-1(RCA)	159
3570P	159
3571	128
3571(RCA)	123AP
3571-1	161
3571R	123AP
3572	107
3572(RCA)	123AP
3572-1(RCA)	123AP
3572-2(RCA)	123AP
3572-3	108
3572-3(RCA)	123AP
3574	159
3574(RCA)	159
3574-1	129
3574-1(RCA)	159
3576	233
3576(RCA)	108
3576-1(RCA)	233
3577	123AP
3577(RCA)	123AP
3577-1	123AP
3578-1	102A
3579	161
3579(RCA)	161
3579-1(RCA)	108
3581	159
3581(RCA)	159
3582	225
3582(RCA)	154
3582-1	128
3582-1(RCA)	128
3583	5604
3583(RCA)	127
3584	124
3584(RCA)	124
3585-5	230
3585-6	231
3585-6(RCA)	231
3585-7	230
3585-8	231
3586	126
3586(RCA)	123AP
3586-2	161
3586-2(RCA)	123AP
3588	123AP
3588(RCA)	222
3588-1(RCA)	222
3588-2	222
3588-2(RCA)	222
3589	123AP
3590	129
3590-1(RCA)	159
3591	128
3592(RCA)	129
3597	159
3597-1	159
3597-1(RCA)	159
3597-2	159
3598(RCA)	108
3598-1(RCA)	102A
3598-2	129
3598-2(RCA)	102A
3599-1(RCA)	159
3600	102
3601	128
3601(RCA)	123AP
3601-1	123AP
3603	160
3603(RCA)	108
3603-1	123AP
3603-1(RCA)	123AP
3604	172A
3604(RCA)	108
3604-1(RCA)	172A
3604-3	123AP
3604-3(RCA)	172A
3606-1(RCA)	108
3607	101
3608(RCA)	128
3608-1	128
3608-1(RCA)	190
3608-2	128
3608-2(J.C.PENNEY)	128
3608-2(RCA)	128
3608-3(RCA)	128
3609	101
3610	107
3610(RCA)	108
3610-1(RCA)	229
3611	186
3611-1(RCA)	152
3612	186
3612(RCA)	152
3612-1(RCA)	152
3613	191
3613(RCA)	171
3613-2	171
3613-2(GE)	191
3613-2(RCA)	191
3613-3	191
3613-3(RCA)	191
3613-4(RCA)	191
3613-5(RCA)	154
3614-1	123AP
3614-2(RCA)	123AP
3614-3	123AP
3615	128
3615(RCA)	128
3615-1	128
3615-1(RCA)	123AP
3616	106
3616-1	159
3616-1(RCA)	129
3617	160
3618	221
3618(RCA)	108
3618-1	121
3618-1(RCA)	222
3618-2(RCA)	222
3619-1	5640
3619-2(RCA)	5642
3619-3(RCA)	5642
3620	106
3620(RCA)	159
3620-1	159
3620-2(RCA)	159
3621(RCA)	152
3621-1(RCA)	152
3622(RCA)	128
3622-1	128
3622-2	128
3622-2(RCA)	128
3623-1(RCA)	152
3624-1(RCA)	185
3624-2(RCA)	185
3625	123AP
3625(RCA)	123AP
3625-1	128
3626	123AP
3627	159
3627(RCA)	159
3627-1	159
3628-2(RCA)	171
3628-3	188
3629-3	189
3631	159
3631(RCA)	152
3631-1	123AP
3631-1(RCA)	152
3632-1	196
3632-2(RCA)	186
3632-3	196
3633-1(GE)	171
3633-1(RCA)	171
3634	162
3634.0011	123AP
3634.2011	159
3634-1	163A
3635	222
3635(RCA)	222
3635-1	222
3635-1(RCA)	222
3635-2	222
3635-2(RCA)	222
3636	124
3636-1(RCA)	152
3637	126
3637(RCA)	162
3637-1	130
3637-1(RCA)	162
3638	175
3638-1	218
3640(RCA)	196
3640-1(RCA)	196
3646-2(RCA)	108
3647	162
3647-1	165
3648(RCA)	127
3648-1(RCA)	127
3649	163A
3649-1	165
3651	106
3651-1(RCA)	395
3652	160
3652-2	229
3656-1	182
3656-2	182
3656-4	182
3657-1	229
3657-2	229
3662-2	165
3665	130
3665-2	130
3666	106
3666(RCA)	128
3666-1(RCA)	159
3669	165
3669-1(RCA)	163A
3669-2	163A
3669-2(RCA)	165
3676	233
3676(RCA)	233
3676-1	161
3676-1(RCA)	229
3677(RCA)	711
3677-1	780
3677-1(RCA)	780
3677-2	780
3677-2(RCA)	780
3677-3	780
3677-3(RCA)	780
3679	191
3679-1	191
3680	161
3680-1	161
3681	152
3681-1	904
3681-1(RCA)	152
3682	153
3682(RCA)	185
3683	130
3683-1	130
3686	126
3686(RCA)	102A
3686-1	712
3686-1(RCA)	222
3687	154
3687-1	171
3688-1	5404
3693(ARVINE)	108
3700-153	116
3701	137A
3702	137A
3703	137A
3704	137A
3706	123AP
3714H1	130
3714H1A	130
3721	175
3742	188
3746	100
3746-00	129
3746-01	129
3750	160
3755-1	5014A
3755-2	5014A
3771	181
3772-1	181
3772-2	181
3777-2(RCA)	145A
3793	5547
3803-8022	238
3819	312
3819(RCA)	132
3831-023-000	74141
3843	152
3843(HARMON KARDON)	130
3843(HARMON-KARDON)	130
3843(SEARS)	196
3844(HARMON KARDON)	128
3851	126
3852	100
3867	123AP
3868	195A
3878	154
3881	161
3888A-D13	5014A
3888A_D13	5014A
3907	102
3907(2N404A)	102
3907/2N404A	102
3961	126
3961(GE)	160
3970	100
3970(GE)	102A
3970CL	102A
3980-002	175
3999	123AP
4000	4000
4000(IC)	4000
4000UBE	4000
4001	154
4001(IC)	4001B
4001(MAGNAVOX)	177
4001-151	125
4001-222	160
4001-223	160
4001-224	102A
4001-225	102A
4001-226	102A
4001-228	190
4001-230	109
4001B	4001B
4001B(TRANS)	311
4001BCN	4001B
4001BDC	4001B
4001BDM	4001B
4001BE	4001B
4001BFC	4001B
4001BFM	4001B
4001BPC	4001B
4002	195A
4002(IC)	4002B
4002(PACE)	123AP
4002(PENNCREST)	123AP
4002(SEARS)	109
4002A	4002B
4002BDC	4002B
4002BDM	4002B
4002BE	4002B
4002BFC	4002B
4002BFM	4002B
4002BPC	4002B
4003(SEARS)	109
4003E	123AP
4004	195A
4004(E.F.JOHNSON)	195A
4004(PENNCREST)	102A
4004(SEARS)	109
4005	224
4005(CB)	224
4005(E F JOHNSON)	195A
4005(E.F.-JOHNSON)	224
4005(SEARS)	109
4006	137A
4006(E.F.JOHNSON)	128
4006(SEARS)	109
4006BE	4006B
4007	195A
4007(IC)	4007
4007(SEARS)	109
4007UBE	4007
4008	311
4008(E F JOHNSON)	311
4008(E.F.JOHNSON)	128
4008(SEARS)	109
4008B	311
4008BDC	4008B
4008BDM	4008B
4008BE	4008B
4008BFC	4008B
4008BFM	4008B
4008BPC	4008B
4009	473
4009(IC)	4009
4009(PENNCREST)	158
4009(SEARS)	109
4010	123AP
4010(E.F.JOHNSON)	108
4010(PENNCREST)	109
4010(SEARS)	109
4010-2(FISHER)	123AP
4011	4011B
4011(E.F.JOHNSON)	195A
4011(IC)	4011B
4011(PENNCREST)	177
4011(SEARS)	109
4011-PC	4011B
4011A	4011B
4011B	4011B
4011BDC	4011B
4011BDM	4011B
4011BE	4011B
4011BFC	4011B
4011BPC	4011B
4011PC	4011B
4012	128
4012(E.F.JOHNSON)	195A
4012(SEARS)	109
4012A	4012B
4012BDC	4012B
4012BDM	4012B
4012BE	4012B
4012BFC	4012B
4012BFM	4012B
4012BPC	4012B
4013	224
4013(E.F.JOHNSON)	195A
4013(IC)	4013B
4013(RECT)	116
4013B	4013B
4013BDC	4013B
4013BDM	4013B
4013BE	4013B
4013BFC	4013B
4013BFM	4013B
4013BPC	4013B
4014	116
4014-000-10160	102A
4014-200-30110	177
4014BE	4014B
4015	4015B
4015(IC)	4015B
4015B	4015B
4015BE	4015B
4016	4016B
4016(IC)	4016B
4016B	4016B
4016BE	4016B
4016BP	4016B
4016BPC	4016B
4017	4017B
4017(IC)	4017B
4017BDC	4017B
4017BDM	4017B
4017BE	4017B
4017BFC	4017B
4017BFM	4017B
4017BPC	4017B
4018B	4018B
4018BDC	4018B
4018BDM	4018B
4018BE	4018B
4018BFC	4018B

PART NUMBER	NTE REPLACEMENT
4018BFM	4018B
4018BPC	4018B
4019	4019B
4019(IC)	4019B
4019B	4019B
4019BE	4019B
4020	4020B
4020(CMOS)	4020B
4020(IC)	4020B
4020BDC	4020B
4020BDM	4020B
4020BE	4020B
4020BFC	4020B
4020BFM	4020B
4020BPC	4020B
4021	123AP
4021BE	4021B
4022	123AP
4022B	4022B
4022BDC	4022B
4022BDM	4022B
4022BE	4022B
4022BFC	4022B
4022BFM	4022B
4022BPC	4022B
4023	4023B
4023(IC)	4023B
4023A	4023B
4023B	4023B
4023BDC	4023B
4023BDM	4023B
4023BE	4023B
4023BFC	4023B
4023BFM	4023B
4023BPC	4023B
4024	4024B
4024(IC)	4024B
4024B	4024B
4024BDC	4024B
4024BDM	4024B
4024BE	4024B
4024BFC	4024B
4024BFM	4024B
4024BPC	4024B
4024P	4024B
4025	4025B
4025(IC)	4025B
4025A	4025B
4025B	4025B
4025BDC	4025B
4025BDM	4025B
4025BE	4025B
4025BFC	4025B
4025BFM	4025B
4025BPC	4025B
4026BE	4026B
4027	4027B
4027B	4027B
4027BDC	4027B
4027BDM	4027B
4027BE	4027B
4027BFC	4027B
4027BFM	4027B
4027BPC	4027B
4028	4028B
4028B	4028B
4028BDC	4028B
4028BDM	4028B
4028BE	4028B
4028BFC	4028B
4028BFM	4028B
4028BPC	4028B
4029	4029B
4029BDC	4029B
4029BDM	4029B
4029BE	4029B
4029BFC	4029B
4029BFM	4029B
4029BPC	4029B
4030	4030B
4030(IC)	4030B
4030BDC	4030B
4030BDM	4030B
4030BFC	4030B
4030BFM	4030B
4030BPC	4030B
4031P	1010
4033BE	4033B
4034L	186
4034S	186
4035	195A
4035(RCA)	190
4035BE	4035B
4036	129
4039-00	199
4039-01	199
4040	4040B
4040(IC)	4040B
4040BDC	4040B
4040BDM	4040B
4040BE	4040B
4040BFC	4040B
4040BFM	4040B
4040BPC	4040B
4041-000-1018	109
4041-000-10150	116
4041-000-10160	102A
4041-000-20120	102A
4041-000-30180	102A
4041-000-40270	107
4041-000-40300	107
4041-000-60170	107
4041-000-60200	107
4041-000-80100	126
4041-200-10180	109
4041-200-30110	135A
4041-200-40100	109
4041-200-10140100	109
4041UBE	4041
4042	4042B
4042B	4042B
4042BDC	4042B
4042BDM	4042B
4042BE	4042B
4042BFC	4042B
4042BFM	4042B
4042BPC	4042B
4043	4043B
4043BDC	4043B
4043BDM	4043B
4043BE	4043B
4043BFC	4043B
4043BFM	4043B
4043BPC	4043B
4044	4044B
4044B	4044B
4044BDC	4044B
4044BDM	4044B
4044BE	4044B
4044BFC	4044B
4044BFM	4044B
4044BPC	4044B
4045BPC	4045B
4046	4046B
4046(SEARS)	123AP
4046B	4046B
4046BE	4046B
4047BPC	4047B
4049	4049
4049UBE	4049
4050	4050B
4050B	4050B
4050BE	4050B
4051	4051B
4051(IC)	4051B
4051-300-10150	116
4051B	4051B
4051BE	4051B
4051P	4051B
4052	4052B
4052(IC)	4052B
4052BE	4052B
4053	4053B
4053B	4053B
4053BE	4053B
4055	4055B
4055(IC)	4055B
4055BPC	4055B
4056BE	4056B
4057	123AP
4060BE	4060B
4063BE	4063B
4066	4066B
4066B	4066B
4066BDC	4066B
4066BE	4066B
4067B	4067B
4067BE	4067B
4068BDC	4068B
4068BDM	4068B
4068BE	4068B
4068BFC	4068B
4068BFM	4068B
4068BPC	4068B
4069	4069
4069UB	4069
4069UBE	4069
4070	4070B
4070B	4070B
4070BE	4070B
4071	4071B
4071B	4071B
4071BDC	4071B
4071BDM	4071B
4071BE	4071B
4071BFC	4071B
4071BFM	4071B
4071BPC	4071B
4072	4072B
4072BDC	4072B
4072BDM	4072B
4072BFC	4072B
4072BFM	4072B
4072BPC	4072B
4073	4073B
4073B	4073B
4073BDC	4073B
4073BDM	4073B
4073BE	4073B
4073BFC	4073B
4073BFM	4073B
4073BPC	4073B
4075	4075B
4075BDC	4075B
4075BDM	4075B
4075BE	4075B
4075BFC	4075B
4075BFM	4075B
4075BPC	4075B
4076BE	4076B
4077BDC	4077B
4077BDM	4077B
4077BE	4077B
4077BFC	4077B
4077BFM	4077B
4077BPC	4077B
4078	4078B
4078B	4078B
4078BDC	4078B
4078BDM	4078B
4078BE	4078B
4078BFC	4078B
4078BFM	4078B
4078BPC	4078B
4079-BW	4024B
4079-DS	4066B
4080-187-0507	128
4080-838-0001	175
4080-838-2	175
4080-838-3	175
4080-866-0006	196
4080-866-1	175
4080-866-2	175
4080-879-0001	196
4081	4081B
4081(IC)	4081B
4081B	4081B
4081BDC	4081B
4081BDM	4081B
4081BE	4081B
4081BFC	4081B
4081BFM	4081B
4081BP	4081B
4081BPC	4081B
4082	4082B
4082-501-0001	121
4082-748-0002	136A
4082BDC	4082B
4082BDM	4082B
4082BE	4082B
4082BFC	4082B
4082BFM	4082B
4082BPC	4082B
4085	123AP
4085BDC	4085B
4085BDM	4085B
4085BFC	4085B
4085BFM	4085B
4085BPC	4085B
4086	159
4086/4086B	4086B
4086BDC	4086B
4086BDM	4086B
4086BFC	4086B
4086BFM	4086B
4086BPC	4086B
4087	159
4093	4093B
4093BE	4093B
4094	4094B
4094B	4094B
4094BE	4094B
4098BE	4098B
4099A	189
4099B	4099B
4099BE	4099B
4101-685	116
4110	140A
4116	2117
4116(DRAM)	2117
4117-1	949
4117-2	949
4124	5257A
4125	5259A
4126	5260A
4126(E.F.JOHNSON)	159
4127	5262A
4128	5263A
4129	5265A
4130	5266A
4131	5268A
4132	5269A
4133	5270A
4134	5271A
4135	5272A
4136	997
4136CP	997
4137	5276A
4138	5278A
4140	5281A
4141	5282A
4142	5283A
4143	5284A
4144	5285A
4145(RECT)	6156
4145(ZENER)	5287A
4146	5288A
4148	519
4149	5292A
4150	5294A
4150-01	123AP
4151	5296A
4151-01	159
4158A	8070
4158A1	8070
4164	4164
4164-2	4164
4164C	4164
4164P1M	5695
4167	123AP
4167(AIRLINE)	161
4167(PENNCREST)	161
4167(SEARS)	108
4168	123AP
4168(PENNCREST)	161
4168(SEARS)	108
4168(WARDS)	161
4168(WELLS GARDNER)	161
4168A	8076
4168A1	8076
4169	123AP
4169(PENNCREST)	161
4169(SEARS)	108
4169(WARDS)	161
4169(WELLS-GARDNER)	161
4178A	8081
4178A1	8081
4191A	8085
4191A1	8085
4194A	8090
4194A1	8090
4204A	8096
4204A1	8096
4208A	8098
4208A1	8098
4216	130
4216(HARMON-KARDON)	130
4218	192
4218(HARMON-KARDON)	184
4218A	8103
4218A1	8103
4219	129
4219(HARMON-KARDON)	185
4220	5252A
4221	5253A
4222	5254A
4223	5255A
4224	5257A
4225	5259A
4226	5260A
4227	5262A
4227A	8108
4227A1	8108
4228	5263A
4229	5265A
4230	5266A
4231	5268A
4232	5269A
4233	5270A
4234	5271A
4235	5272A
4236	5274A
4237	5276A
4238	5278A
4239A	8115
4239A1	8115
4240	5281A
4241	5282A
4242	5283A
4243	5284A
4244	5285A
4244A	8118
4244A1	8118
4245	5287A
4246	5288A
4247	104
4248	5291A
4249	5292A
4250	5294A
4251	5296A
4257A	8125
4257A1	8125
4283A	8139
4283A1	8139
4300A	8149
4300A1	8149
4306	128
4306(HARMON-KARDON)	128
4309(AIRLINE)	123AP
4312	124
4312(RCA)	124
4313	102
4315	102
4320	5252A
4321	5253A
4322	5254A
4322-542	123AP
4323	5255A
4324	5257A
4325	5259A
4326	5260A
4327	5262A
4328	5263A
4329	5265A
4330	5266A
4331	121
4331(ZENER)	5268A
4332	5269A
4333	5270A
4333A	8167
4333A1	8167
4334	5271A
4335	5272A
4336	5274A
4337	5276A
4338	5278A
4340	5281A
4341	5282A
4342	5283A
4343	5284A
4344	5285A
4345	5287A
4346	5288A
4347	104
4348	102
4348(ZENER)	5291A
4349	102
4349(ZENER)	5292A
4350	5294A
4351	5296A
4351.0012	109
4351.0013	109
4351.0031	109
4354	109
4354.0012	116
4354.0013	614
4358A	8181
4358A1	8181
4360D	152
4363	126
4363BLU	126
4363GRN	126
4363ORN	126
4363WHT	126
4364	126
4365	126
4366	126
4367	126
4367-001	129
4368	160
4398	102
4400Y	1211
4403	116
4415A	8213
4415A1	8213
4419-4	180
4420	5252A
4421	5253A
4422	5254A
4423	5255A
4424	5257A
4425	5259A
4426	5260A
4427	5262A
4428	5263A
4429	5265A
4430	5266A
4431	5268A
4432	5269A
4433	5270A
4434	5271A
4435	5272A
4436	5274A
4437	5276A
4437-1	787
4437-1(RCA)	787
4437-2	787
4437-2(RCA)	787
4437-3	787
4437-3(RCA)	787
4438	5278A
4438-1	788
4438-1(RCA)	788
4438-2	788
4438-2(RCA)	788
4438-3	788
4438-3(RCA)	788
4438A	8226
4438A1	8226
4439-1	789
4439-1(RCA)	789
4439-2	789
4439-2(RCA)	789
4440	5281A
4441	5282A
4442	159
4442(ZENER)	5283A
4442-3	188
4442-366	196
4443	5284A
4444	5285A
4445	5287A
4446	5288A
4448	5291A
4449	5292A
4450	102
4450(ZENER)	5294A
4451	100
4451(ZENER)	5296A
4454	126
4456	126
4457	126
4459	127
4460-2	789
4460-3	789
4462	102
4463	121
4464	123
4465	123
4466	100
4466ORN	102
4467	176
4467(RECT)	5944
4468A	8242
4468A1	8242
4468BRN	102
4469RED	102
4470	123
4470-31	123
4470-32	123
4470-33	123
4470-ORN	176
4470M-32	123
4471	100
4471ORN	102
4471YEL	102
4472	100
4472GRN	102
4473	102A
4473-1	108
4473-2	108
4473-3	108
4473-4	123AP
4473-5	123AP
4473-5X	123AP
4473-6	108
4473-7	108
4473-8	108
4473-9	123AP
4473-11	108
4473-12	123AP
4473-M3	128
4473-M-3	123AP
4473-M-12	128
4473-N	128
4474	100
4474YEL	102
4475	100
4475GRN	102
4476	100
4476BLU	102
4477	100
4477PUR	102
4477V10	102A
4478	129
4483	128
4484	100
4484-1	106
4484-2	106
4485	100
4485-1	106
4486	100
4490	128
4490-1	108
4490-7	152
4491-4	130
4491-5	152
4491-6	184
4491-7	130
4491-8	152
4491-9	184
4501	126
4502	4502B
4502B	4502B
4502BE	4502B
4503	4503B
4503BE	4503B
4508BE	4508B
4509	126
4510	102
4510BDC	4510B
4510BDM	4510B
4510BE	4510B
4510BFC	4510B
4510BFM	4510B
4510BPC	4510B
4511	4511B
4511B	4511B
4511BE	4511B
4511BPC	4511B
4512	4512B
4512B	4512B
4512BE	4512B
4513B	4513B
4514BE	4514B
4514BPC	4514B
4515BE	4515B
4516	4516B
4516B	4516B
4516BDC	4516B
4516BDM	4516B
4516BE	4516B
4516BFC	4516B
4516BFM	4516B
4516BPC	4516B
4518	4518B
4518(IC)	4518B
4518BDC	4518B
4518BDM	4518B
4518BE	4518B
4518BFC	4518B
4518BFM	4518B
4518BPC	4518B
4520	4520B
4520B	4520B
4520BDC	4520B
4520BDM	4520B
4520BE	4520B
4520BFC	4520B
4520BFM	4520B
4520BPC	4520B
4526BE	4526B
4528B	4528B
4528BPC	4528B
4532	4532B
4532BE	4532B
4538	4538B
4538B	4538B
4538BPC	4538B
4541BE	4541B
4545	126
4545BLU	126
4545WHT	126
4552	144A
4553	100
4553B	4553B
4553BLU	102
4553BRN	102
4553GRN	102
4553ORN	102
4553RED	102
4553V10	102A
4553YEL	102
4555	4555B
4555BE	4555B
4558	778A
4558C	778A
4558D	778A
4558DA	778A
4558DD	778A
4562	102
4563	102
4564	102
4565	102
4567	102
4569	4569B
4569B	4569B
4570	121
4573	105
4582BRN	121
4583RED	121
4584B	4584B
4584BPC	4584B
4584GRN	121
4585	4585B
4586	126
4587	108
4589	126
4590	106
4594	123
4595	126
4596	102
4597	105
4597B	4597B
4597GRN	105
4597RED	105
4598B	4598B
4603	126
4604	126
4605	126
4605RED	126
4607	102
4607-1(RCA)	532
4607-2(RCA)	532
4607-5(RCA)	532
4607-6(RCA)	532
4607-7(RCA)	531
4607-8(RCA)	531
4607-9(RCA)	533
4607-10(RCA)	533
4608	121
4619RED	121
4620GRN	121
4621	126
4622	105
4623	127
4624	123
4627	102
4630	123
4632	126
4640	179
4640P	179
4648	154
4649	121
4652	127
4653	139A
4663	147A
4677	126
4684-120-3	108
4685-285-3	108
4686-1(RCA)	712
4686-81-2	102A
4686-81-3	102A
4686-82-3	123AP
4686-87-3	117
4686-89-3	125
4686-95-3	108
4686-97-3	125
4686-105-3	125
4686-106-3	125
4686-107-3	108
4686-108-3	108
4686-112-3	108
4686-114-3	108
4686-116-3	117
4686-118-3	108
4686-119-3	108
4686-120-3	108
4686-126-3	108
4686-127-3	108
4686-130-3	175
4686-131-3	108
4686-132-3	123AP
4686-139-3	125
4686-140-3	108
4686-143-3	123AP
4686-144-3	123AP
4686-145-3	194
4686-147-3	117
4686-148-3	117
4686-149-3	116
4686-150-3	117
4686-151-3	117
4686-163-3	102A
4686-169-3	108
4686-170-3	129
4686-171-3	108
4686-172-3	108
4686-173-3	123AP
4686-177-3	117
4686-179-3	125
4686-182-3	128
4686-183-3	123AP
4686-184-3	125
4686-186-3	125
4686-189-3	125
4686-195-3	102A
4686-196-3	102A
4686-199-3	125
4686-201-3	125
4686-207-3	108
4686-208-3	108
4686-209-3	108
4686-210-3	225
4686-212-3	125
4686-213-3	121
4686-224-3	108
4686-226-3	175

PART NUMBER	NTE REPLACEMENT
4686-228-3	108
4686-229-3	129
4686-230-3	129
4686-231-3	123AP
4686-232-3	154
4686-234-3	196
4686-235-3	129
4686-238-3	129
4686-244-3	108
4686-251-3	108
4686-252-3	191
4686-256-1	126
4686-256-2	126
4686-256-3	126
4686-257-3	123AP
4689	128
4699	150A
4700	101
4701	130
4702	179
4704	150A
4705	123
4706	108
4709	108
4714	123
4715	130
4715A	130
4722	121
4722BLU	121
4722GRN	121
4722ORN	121
4722PUR	121
4722RED	121
4722YEL	121
4727	121
4728	151A
4729	179
4730	121
4732	123AP
4733	123AP
4734	123AP
4737	123AP
4740	5125A
4745	196
4746	107
4756	161
4765	123AP
4768	123AP
4777-1(RCA)	142A
4777-2(RCA)	145A
4777-7(RCA)	149A
4777-9(RCA)	144A
4777-11(RCA)	144A
4777-12(RCA)	147A
4777-13(RCA)	145A
4777-14(RCA)	146A
4777-16(RCA)	147A
4777-20(RCA)	5074A
4778-3(RCA)	116
4778-4(RCA)	156
4778-5(RCA)	552
4778-6(RCA)	156
4778-7(RCA)	177
4778-8(RCA)	156
4778-9(RCA)	177
4778-10(RCA)	116
4778-11(RCA)	116
4778-13(RCA)	116
4778-14(RCA)	156
4778-16(RCA)	177
4778-21(RCA)	156
4781	197
4789	107
4792	6400
4793(KLH)	722
4795	726
4795(KLH)	726
4800-200	102A
4800-220	102A
4800-221	102A
4800-222	102A
4800-223	131MP
4800-224	507
4801-0000-001	106
4801-0000-003	199
4801-0000-010	199
4801-0000-060	106
4801-0000-016	319P
4801-0000-035	123AP
4801-00801	139A
4801-00154	177
4801-00628	109
4801-00629	109
4801-1100-0011	123AP
4801-1100-011	121
4802-00010	132
4802-0000-002	184
4802-00002	108
4802-00003	123AP
4802-00004	159
4802-00005	130
4802-00005A	130
4802-00006	123AP
4802-00007	195A
4802-00008	237
4802-00009	123AP
4802-00012	123AP
4802-00014	289
4802-00015	123AP
4802-00016	300
4802-00017	195A
4802-00019	224
4802-2000-012	116
4802-2000-019	116
4802-3268-000	299
4802-3274-200	182
4804-3169-008	345
4804-3169-501	350
4804-3169-506	350
4804-3169-510	345
4804-3169-604	473
4804-3169-605	346
4804-3169-606	346
4804-3169-607	486
4804-3169-801	352
4804-3169-804	367
4804-3170-301	356
4804-3173-302	345
4804-3267-901	299
4805-1241-200	519
4806-0000-004	116
4806-0000-005	156
4808-0000-007	135A
4808-0000-009	5072A
4808-0000-037	5090A
4809-0000-001	614
4811-0000-015	312
4811-0000-025	312
4811-0000-039	278
4815	159
4819	154
4820	108
4820-0201	519
4821	108
4821-0000-011	350
4821-0000-023	348
4821-0000-024	320
4821-0000-027	325
4821-0000-034	219
4821-0000-038	485
4821-0000-039	367
4821-0000-042	368
4821-0000-043	367
4821-0802-056	366
4821-0644-011	350
4821-0644-012	320
4821-0649-012	352
4822	85
4822-130-30132	5071A
4822-130-30192	116
4822-130-30193	136A
4822-130-30256	116
4822-130-30259	116
4822-130-30261	167
4822-130-30264	135A
4822-130-30281	109
4822-130-30284	5069A
4822-130-30287	138A
4822-130-30301	109
4822-130-30311	109
4822-130-30312	109
4822-130-30414	166
4822-130-40095	158
4822-130-40096	103A
4822-130-40132	130
4822-130-40182	177
4822-130-40184	123AP
4822-130-40212	155
4822-130-40213	131
4822-130-40214	107
4822-130-40215	107
4822-130-40216	107
4822-130-40229	109
4822-130-40233	104
4822-130-40235	102A
4822-130-40236	102A
4822-130-40252	160
4822-130-40255	160
4822-130-40304	161
4822-130-40311	107
4822-130-40312	107
4822-130-40313	107
4822-130-40314	103A
4822-130-40315	159
4822-130-40317	107
4822-130-40318	107
4822-130-40319(NPN)	103A
4822-130-40319(PNP)	102A
4822-130-40329(NPN)	103A
4822-130-40329(PNP)	102A
4822-130-40333	123AP
4822-130-40343	123AP
4822-130-40348	106
4822-130-40354	123AP
4822-130-40356	128
4822-130-40361	123AP
4822-130-40369	106
4822-130-40382(NPN)	103A
4822-130-40382(PNP)	102A
4822-130-40385(NPN)	155
4822-130-40385(PNP)	131
4822-130-40441	160
4822-130-40454	123AP
4822-130-40456	158
4822-130-40477	106
4822-130-40508	106
4822-130-40537	184
4822-130-40614	106
4822-130-41275	125
4822-130-50221	116
4822-130-50228	168
4822-130-60588	2355
4823	85
4823-0018	175
4823-0031-01	234
4824	123AP
4824-0014	199
4824-0014-02	199
4824-28-1	311
4824-33	128
4825	229
4826	85
4828-4	109
4835-130-37009	580
4835-130-37046	5036A
4835-130-37047	552
4835-130-37048	519
4835-130-37049	5022A
4835-130-37052	580
4835-130-37053	552
4835-130-37058	587
4835-130-37059	580
4835-130-37061	580
4835-130-37062	519
4835-130-37063	5030A
4835-130-37064	5031A
4835-130-37067	139A
4835-130-37068	5011T1
4835-130-37082	5035A
4835-130-37084	5011A
4835-130-37085	5016A
4835-130-37086	5018A
4835-130-37091	5033A
4835-130-37092	5037A
4835-130-37094	580
4835-130-37096	5018A
4835-130-37099	580
4835-130-37121	5013T1
4835-130-37136	519
4835-130-37145	519
4835-130-37184	519
4835-130-37235	519
4835-130-37304	5009A
4835-130-37328	519
4835-130-37329	5011A
4835-130-37332	177
4835-130-37334	116
4835-130-37335	5035A
4835-130-37336	5013A
4835-130-37337	552
4835-130-37399	5013A
4835-130-37402	5018A
4835-130-37404	5025A
4835-130-37405	5015A
4835-130-37471	5313
4835-130-37472	5313
4835-130-37548	580
4835-130-37551	5332
4835-130-37563	598
4835-130-47049	159
4835-130-47051	123AP
4835-130-47052	123AP
4835-130-47053	159
4835-130-47054	159
4835-130-47055	123AP
4835-130-47056	199
4835-130-47058	48
4835-130-47059	399
4835-130-47064	123AP
4835-130-47065	2406
4835-130-47067	2302
4835-130-47073	399
4835-130-47086	2406
4835-130-47091	2331
4835-130-47097	2331
4835-130-47099	399
4835-130-47126	519
4835-130-47137	85
4835-130-47147	2409
4835-130-47235	85
4835-130-47244	2357
4835-130-47275	85
4835-130-47353	2357
4835-130-47358	85
4835-130-47397	2358
4835-130-47413	153
4835-130-47422	2362
4835-130-47424	290A
4835-130-47426	383
4835-130-47427	293
4835-130-47428	2357
4835-130-47429	85
4835-130-47431	24
4835-130-47433	382
4835-130-47435	85
4835-130-47436	85
4835-130-47439	2358
4835-130-47441	85
4835-130-47442	290A
4835-130-47479	2359
4835-130-47503	107
4835-130-47525	54
4835-130-47545	55
4835-130-47575	290A
4835-130-47576	290A
4835-130-47744	399
4835-130-47756	289A
4835-130-47757	289A
4835-130-47759	399
4835-130-47761	2330
4835-130-47764	184
4835-130-47765	290
4835-130-47769	157
4835-130-57003	5458
4835-130-87094	1845
4835-130-97005	3041
4835-130-97006	3092
4835-130-97009	3042
4835-209-17033	4053B
4835-209-17148	1803
4835-209-47056	1777
4835-209-87065	1580
4835-209-87067	960
4835-209-87069	1773
4835-209-87074	1781
4835-209-87079	928M
4835-209-87081	943M
4835-209-87085	1798
4835-209-87091	1858
4835-209-87094	1845
4835-209-87105	4066B
4835-209-87252	977
4835-209-87259	960
4835-209-87263	834
4835-209-87264	615P
4835-209-87271	519
4835-209-87274	960
4835-209-87275	958
4835-209-87283	966
4835-209-87342	15044
4835-209-87406	1789
4835-209-87612	1674
4835-209-87803	1729
4835-209-87821	977
4835-209-87827	966
4835-209-87835	1852
4837	108
4838	154
4839	123AP
4840	123AP
4841	123AP
4842	123AP
4843	154
4844	159
4845	108
4846-1	949
4846-2	949
4850	141A
4851	107
4851(ZENER)	141A
4852	123AP
4853	154
4854	123AP
4855	108
4856-0101	123AP
4856-0106	159
4856-0107	123AP
4856-0109	123AP
4856-0110	123AP
4857	229
4858	147A
4860-1-3	311
4872	124
4872-1(RCA)	177
4882	130
4888A	121
4888B	121
4904	199
4907-976	102A
4927	123AP
4935	192
4937	199
4943	290
4984-1(RCA)	532
4984-2(RCA)	532
4989	290
5001	6400
5001-002	123AP
5001-004	299
5001-010	300
5001-020	123AP
5001-050	235
5001-070	289
5001-080	109
5001-014	123AP
5001-021	289
5001-032	229
5001-037	123AP
5001-038	199
5001-043	199
5001-044	299
5001-046	222
5001-047	133
5001-048	159
5001-049	226MP
5001-053	152
5001-064	186
5001-066	159
5001-069	123AP
5001-071	236
5001-072	123AP
5001-074	199
5001-075	186
5001-083	177
5001-089	125
5001-107	177
5001-112	135A
5001-117	116
5001-120	519
5001-125	139A
5001-128	519
5001-129	116
5001-130	5072A
5001-131	137A
5001-134	109
5001-135	116
5001-141	109
5001-142	5015A
5001-143	5075A
5001-144	177
5001-145	177
5001-146	519
5001-152	139A
5001-156	177
5001-160	136A
5001-161	109
5001-162	177
5001-163	116
5001-164	177
5001-196	614
5001-197	135A
5001-505	199
5001-506	289
5001-508	130
5001-509	159
5001-510	108
5001-511	199
5001-512	103A
5001-513	295
5001-514	157
5001-517	306
5001-539	123AP
5001-540	106
5001-541	199
5001-542	123AP
5001-543	161
5001-544	199
5001-545	229
5002(THOMAS)	754
5002-007	1100
5002-030	1167
5002-031	1155
5051-300-10150	116
5052	102
5059-0236	159
5060-09424-00	923D
5065	123AP
5082-2800	583
5082-2810	584
5082-2811	584
5082-3168	553
5082-4100	3001
5082-4101	3001
5082-4150	3002
5082-4160	3004
5082-4403	3025
5082-4415	3025
5082-4440	3025
5082-4444	3025
5082-4550	3021
5082-4650	3022
5082-4684	3008
5082-4850	3025
5082-4855	3025
5082-4880	3025
5082-4881	3025
5082-4882	3025
5082-4950	3024
5082-7610	3062
5082-7611	3053
5082-7620	3064
5082-7621	3055
5082-7630	3063
5082-7631	3054
5082-7730	3061
5082-7731	3052
5082-7740	3057
5084-600-452I-0	519
5084-600-4521-0	519
5085	160
5093	108
5096	132
5101N60	110MP
5101S34	109
5113T	704
5118	219
5120A90	109
5122	142A
5124	145A
5130	146A
5132	147A
5139	149A
5142	150A
5145	151A
5158	797
5158-1	797
5158-1(RCA)	797
5162-09425-00	247
5169-103-0608	177
5203N1	178MP
5205NI	116
5205NL	116
5210DC-1	5801
5213-4000	5882
5217	177
5222	142A
5224	145A
5224(SCR)	5527
5224(ZENER)	145A
5226-1	159
5226-2	123AP
5228B	5007A
5229-2(RCA)	985
5230	146A
5230A	5009A
5232	147A
5233-7100	7411
5239	149A
5242	150A
5245	151A
5250-09515-00	961
5253	104
5258	128
5259	196
5280-09407-X0	7447
5280-09530-00	7420
5280-0954-00	7427
5280-09475	7411
5280-09476-X0	7421
5280-09477-00	7432
5280-09478-00	7474
5280-09479-00	7486
5280-09481-00	74153
5280-09547-00	7405
5281-09480-00	74LS107
5281-09501-00	74LS395A
5281-09215-00	74LS04
5281-09246-00	74LS139
5281-09385-00	74LS367
5281-09485-00	74LS257
5281-09486-00	74LS374
5281-09487-00	74LS74A
5281-09533-00	74LS393
5300-82-3	125
5300-82-4	125
5300-82-1003	117
5300-86-1	116
5300-88-1	116
5300-88-2	117
5300-88-3	125
5300-88-1002	125
5300-88-1003	125
5300-88-1004	125
5300-94-1	116
5300-95-1	116
5300-98-1	116
5300-99-1	116
5300-99-3	116
5300-99-4	116
5301-06-1	116
5301-06-1001	125
5301-09-1	116
5301-11-1	117
5301-11-1001	125
5301-13-1	116
5301-19-1	503
5301-20-1	116
5301-22-1	117
5301-32-1	118
5301-36-T	125
5303-1	5642
5303-2	5642
5306B	402
5310-09450-00	4081B
5310-08975-00	4049
5310-09236-00	4020B
5310-09237-00	4071B
5313-461B	108
5316-1(RCA)	984
5316-2(RCA)	984
5320-003	175
5324	5130A
5325	5026A
5326	5133A
5327	5135A
5328	5136A
5329	5138A
5330	5139A
5331	5141A
5332	5142A
5333	5143A
5334	5144A
5335	5145A
5336	5146A
5337	5147A
5340	5151A
5340-09409-X0	2114
5340-09488-00	2117
5341	5152A
5342	5153A
5343	5155A
5344	5156A
5345(ZENER)	5157A
5346	5158A
5348	5161A
5350	5164A
5351	5166A
5361-1N60P	110MP
5380-21	116
5380-71	123AP
5380-72	123AP
5380-73	128
5380-73(POWER)	175
5403-MS	139A
5416	116
5417F	289A
5417G	289A
5417H	289A
5430-08972-00	6821
5431-09449	955M
5459	133
5464	102A
5470-2(RCA)	503
5470-503(RCA)	503
5504	181
5505	181
5506	5002A
5507	5004A
5508	5005A
5509	5006A
5510	5007A
5511	5008A
5512	5009A
5513	5010A
5514	5011A
5515	5013A
5516	5014A
5517	5015A
5518	5016A
5519	5018A
5520	5019A
5521	5020A
5522	5021A
5522-8	5802
5523	5022A
5524	5024A
5525	5025A
5526	5027A
5527	5029A
5528	5030A
5529	5031A
5530	5033A
5531	5035A
5532	5036A
5533	5037A
5534	5038A
5535	5039A
5536	5040A
5537	5041A
5538	5042A
5539	5044A
5540	5045A
5541	5046A
5553	128
5565-001	130
5601-MS	116
5601-NI	116
5601-NL	116
5604	54
5609	293
5611-628	159
5611-628(F)	106
5611-628F	159
5611-673	159
5611-673D	159
5611-695	193
5611-695C	193
5611-733(P)	290A
5611-933(R)	290A
5611-950	290A
5611-1015	290A
5611-1015(Y)	290A
5611-1015Y	290A
5611-6370	100
5611-6730	106
5612-75(C)	100
5612-75C	102A
5612-77C	102A
5612-77C(NPN)	103A
5612-77C(PNP)	102A
5612-370	102A
5612-370C	102A
5613-46B	108
5613-458	123AP
5613-458B	123AP
5613-458C	123AP
5613-458D	123AP
5613-458LGC	123AP
5613-460	107
5613-460A	107
5613-460B	107
5613-460C	107
5613-461	107
5613-461(B)	123AP
5613-461C	107
5613-535	107
5613-535(B)	123AP
5613-535A	107
5613-535B	107
5613-535C	107
5613-558C	123AP
5613-710B	123AP
5613-711	123AP
5613-711(E)	123AP
5613-711E	199
5613-828(S)	161
5613-828S	229
5613-870	123AP
5613-870(F)	123AP
5613-870F	123AP
5613-871	199
5613-871(F)	199
5613-871F	199
5613-945(K)	85
5613-945(P)	85
5613-945L(K)	85
5613-1162	210
5613-1209	192
5613-1209C	192
5613-1213D	128
5613-1327(T)	199
5613-1327T	199
5613-1335	123AP
5613-1335(E)	199
5613-1335D	123AP
5613-1342	107
5613-1342C	107
5613-1359(B)	123AP
5613-1359B	199
5613-1473A	399
5613-1473A(R)	399
5613-1473AR	399
5613-1568(R)	184
5613-1573B	399
5613-1573B(R)	399
5613-1573BR	399
5613-1675(K)	85
5613-1675(L)	85
5613-1684(T)	199
5613-1684T	199
5613-1740(R)	85
5613-1788(R)	293
5613-1788R	192
5613-1815	85
5613-1815(GR)	85
5613-1815GR	85
5613-1846(Q)	373
5613-1846Q	306

PART NUMBER	NTE REPLACEMENT
5613-1923	107
5613-1923(Y)	107
5613-1923Y	107
5613-2001(K)	85
5613-3153	2309
5613-4581	161
5613-4581C	123AP
5614-77C	103A
5614-330	152
5614-359C	186A
5614-360D	235
5614-471(K)	293
5614-571(K)	293
5614-882	184
5614-882(P)	184
5614-1197	270
5614-1397	2302
5614-1398	2302
5615-2	1176
5629-1(RCA)	985
5631-0A90	109
5631-0A90M	109
5631-1N34A	109
5631-1N60	109
5631-1N60P	109
5631-1S2076	519
5631-1S2473	519
5631-20A90	109
5631-20A90H	110MP
5631-152473	519
5631-MA150	177
5632-1S2226	116
5632-1S2227	116
5632-406G	5806
5632-DFA1A4	552
5632-DFM1A4	552
5632-ERB24-04	552
5632-ERB24-06	552
5632-ERC04-04	125
5632-HZ11A	140A
5632-S1B01-02	116
5632-S5566B	116
5632-S5566G	116
5632-W03B	116
5632-W06A	116
5632-W06B	116
5633-1S85	614
5633-1S85Y	614
5633-1S2790W	613
5633-152790W	614
5635-HZ11	5020A
5635-HZ11A	140A
5635-HZT33	615
5635-RD4R7EB	5009A
5635-RD4R7EB2	5009A
5635-RD5R1EB	5010A
5635-RD6R8EB	5014A
5635-RD6R8EB2	5014A
5635-RD7R5EB2	5015A
5635-RD8R2EB	5016A
5635-RD8R2EB2	5016A
5635-RD9R1EB	5018A
5635-RD9R1EB1	5018A
5635-RD9R1EB2	5018A
5635-RD10EB	5019A
5635-RD11EB2	5020A
5635-RD13EB	5022A
5635-RD15EB	5024A
5635-RD20EB3	5029A
5635-RD30EB	5035A
5635-RD36EB	5037A
5635-UZ5R6BM	5011A
5635-UZ10BL	5019A
5635-ZB1-10	140A
5636-1SS133	519
5636-RD5R1EB	5010A
5636-RD6R8EB	5014A
5637-1(RCA)	986
5638-10	844
5641-MV11	116
5652-AN217	1060
5652-AN217(BB)	1060
5652-AN217BB	1060
5652-AN5512	1674
5652-HA1156	801
5652-LA7520	15001
5652-TA78L005	977
5652-UPC575C2	1140
5652-UPC1026C	1226
5653-AN5265	1789
5653-TA7777N	1790
5653-TA78012A	966
5680	129
5685-D2SBA40	168
5701	159
5710	229
5721	123AP
5722-3000	160
5723P	801
5724P	801
5762-1(RCA)	230
5762-2(RCA)	231
5766-25	102
5778-1(RCA)	5641
5778-2(RCA)	5641
5780-1(RCA)	5511
5781-2(RCA)	5401
5815	723
5847	152
5847(RCA)	184
5861	125
5862	161
5909-001	181
5914-501(RCA)	503
5923	116
5932	789
5961-00-189-0550	180
5961-01-194-1301	5652
5961-01-212-0296	5374
5962-01-144-9481	4028B
6001	1115
6003	133
6007-3	708
6008	160
6008(E.F.JOHNSON)	160
6013	312
6019	177
6070	8070
6076	8076
6082	8081
6091	8090
6096	8096
6099	8098
6099-2	196
6100	158
6100-35	158
6102	178MP
6109	8108
6115	5072A
6115(GE)	5072A
6115(TCD)	8115
6126	8125
6129-P1	519
6136	123AP
6139	8139
6149-1(RCA)	515
6149-2(RCA)	515
6150	8149
6151	128
6151(RCA)	128
6154	126
6155	126
6158	108
6158-3	108
6161-11(RCA)	558
6161-12(RCA)	552
6161-13(RCA)	558
6162	126
6171-11(RCA)	558
6171-12(RCA)	558
6171-13(RCA)	558
6171-14(RCA)	515
6171-15(RCA)	515
6171-17	506
6171-17(RCA)	506
6171-18	506
6171-19(RCA)	515
6171-20(RCA)	515
6171-21(RCA)	156
6171-22(RCA)	506
6171-24(RCA)	558
6171-25(RCA)	552
6171-26(RCA)	125
6171-27(RCA)	558
6171-28	116
6171-29(RCA)	552
6171-30(RCA)	552
6171-31(RCA)	552
6171-32(RCA)	552
6171-33(RCA)	552
6171-34(RCA)	552
6171-35(RCA)	552
6179-1(RCA)	109
6181-1	154
6183-4(RCA)	503
6183-5(RCA)	506
6185-3	108
6188-1(RCA)	123AP
6192D40031	1813
6201	159
6221	221
6227	222
6284	128
6285	129
6313	160
6343-1	123AP
6351	222
6367	123AP
6367-1	123AP
6377-1(SYLVANIA)	131
6377-2(SYLVANIA)	155
6380-1	130
6380-3	152
6381-1	175
6381-2	152
6382-2	152
6432-3	139A
6440	102
6445	100
6452	102
6458D	778A
6502	6502
6502AD	6502
6502B	6502
6507	6507
6507(AIRLINE)	108
6514	123AP
6517	123AP
6523-34	116
6532	6532
6532PC	6532
6551	722
6552	778A
6562	928M
6562-0	290A
6562-0	290A
6570	941M
6629	125
6629-A05	125
6651-486	128
6690-1(RCA)	177
6690-2(RCA)	177
6762	159
6800	6800
6810	6810
6818	105
6820	6821
6821	6821
6854K90-062	159
6854K90-074	123AP
6855K90	106
6860-1(RCA)	532
6860-2(RCA)	537
6865-1(RCA)	532
6900K91-002	9944
6900K91-003	9946
6900K91-004	9962
6900K91-006	9936
6900K91-007	9932
6900K91-009	9157
6900K93-001	9951
6900K95-001	9099
6900K95-002	9093
6930-1(RCA)	505
6930-2(RCA)	505
6933-501(RCA)	505
6933-503(RCA)	505
6954K90-074	123AP
6990	160
7001	123AP
7001(DARLINGTON)	172A
7002	123AP
7005G(LOWREY)	123AP
7006	123AP
7013-1(RCA)	221
7014	123AP
7014-1(RCA)	222
7015	123AP
7019-1(RCA)	108
7021	722
7031	121
7046-1(RCA)	145A
7046-5(RCA0	5085A
7046-5(RCA)	5085A
7046-8(RCA)	5127A
7046-10(RCA)	5133A
7046-11(RCA)	5135A
7046-13(RCA)	5136A
7046-14(RCA)	5134A
7046-16(RCA)	5133A
7046-17(RCA)	5116A
7046-19(RCA)	5119A
7046-20(RCA)	5142A
7046-21(RCA)	5131A
7064-17(RCA)	5116A
7081-501(RCA)	145A
7106	2051
7106CPL	2051
7107	2050
7107CPL	2050
7108	123A
7109	229
7112	177
7112(TRANS)	229
7113	123AP
7115	108
7115(IC)	708
7115(STELMA)	708
7116	229
7117	123AP
7117(GE)	108
7118	108
7120A(GE)	712
7122	108
7122-5	123AP
7123	108
7124	108
7125	108
7126	108
7127	108
7128	108
7129	123AP
7130A	1045
7131	108
7132	108
7133	108
7134	108
7149A	712
7171	123AP
7171(GE)	123AP
7172	123AP
7172-54	105
7173	108
7174	108
7175	108
7176	123AP
7177	108
7178	108
7206-0	120
7209A	120
7211-9	116
7212-3	116
7212-3A	116
7213	152
7213(DIODE)	116
7213-0	117
7213-7	116
7214	108
7214(LOWREY)	130
7214-6	125
7214A	130
7214S	116
7215	108
7215-0	102A
7215-1	125
7215-2	125
7216	108
7217	108
7218	108
7219	108
7219-3	131
7220	108
7221	108
7221A	712
7232	108
7233	229
7233S	123AP
7234	108
7235	108
7236	229
7236S	161
7237	108
7238	108
7239	102
7245	229
7252	152
7253	171
7253(LOWREY)	154
7261	229
7262	108
7264	229
7265	319P
7301-1	129
7302	123AP
7302-1(RCA)	123AP
7303	106
7303(RCA)	159
7303-1	159
7303-1(RCA)	159
7303-2	159
7303-3	159
7306	123AP
7306-1	123AP
7306-1(RCA)	123AP
7306-4	123AP
7306-5	123AP
7306-6(RCA)	123AP
7306-7	123AP
7306-8	123AP
7306-8(RCA)	123AP
7306-9(RCA)	123AP
7306-11(RCA)	123AP
7306-13	123AP
7306-13(RCA)	123AP
7309-2(RCA)	123AP
7309-3(RCA)	123AP
7309-4(RCA)	123AP
7310	124
7310(GE)	124
7311	124
7311(GE)	124
7312	175
7313(TRANS)	159
7314	116
7316	188
7316-1	186
7316-1(RCA)	188
7317	124
7317-1	187
7317-1(RCA)	189
7318	123AP
7318-1	123AP
7318-2	194
7318-6	123AP
7318-7(RCA)	123AP
7320-1	130
7321	194
7321-1	123AP
7321-1(RCA)	194
7322	175
7322-1	124
7322-1(RCA)	175
7325-1	128
7325-3(RCA)	123AP
7327-2(RCA)	123AP
7330-1(RCA)	159
7330-5(RCA)	159
7330-6(RCA)	159
7330-9(RCA)	159
7331-1(RCA)	196
7333-1(RCA)	123AP
7334	128
7335	165
7335-1	165
7335-1(RCA)	165
7338-5(RCA)	128
7338-7(RCA)	128
7340	106
7340-2	123AP
7341	505
7342-1	116
7342-1(RCA)	123AP
7343-1(RCA)	123AP
7343-2(RCA)	123AP
7343-3(RCA)	123AP
7344	177
7344-1	128
7345-2	128
7346-3	123AP
7347-3(RCA)	159
7349	128
7349-2	123AP
7349-2(RCA)	123AP
7349-5	123AP
7351	185
7353-5(RCA)	189
7356-2	130
7358-1	152
7359-1	185
7361-1(RCA)	191
7362-1	171
7362-2(RCA)	171
7362-3	171
7362-5(RCA)	171
7362-6	171
7362-(RCA)	171
7363-1	159
7364-1	196
7364-6053P1	195A
7366-1(RCA)	165
7367-1(RCA)	395
7368(RCA)	222
7368-4(RCA)	222
7369-2(RCA)	222
7370	165
7370-1(RCA)	165
7372-1	222
7373-1(RCA)	159
7373-2(RCA)	159
7374-2(RCA)	123AP
7374-3(RCA)	123AP
7374-4(RCA)	123AP
7375-6(RCA)	172A
7376-1(RCA)	222
7376-2(RCA)	222
7376-3(RCA)	222
7376-5(RCA)	222
7377-2(RCA)	107
7377-3(RCA)	222
7377-4(RCA)	107
7377-6(RCA)	108
7377-7(RCA)	108
7380-1(RCA)	238
7381-2	128
7382-1(RCA)	5400
7391BT	29
7398-5(RCA)	152
7398-6117P1	123AP
7398-6118P1	123AP
7398-6119P	123AP
7398-6119P1	123AP
7398-6120P	300
7398-6120P1	300
7400	7400
7400-1(RCA)	123AP
7400-6A	7400
7400-9A	7400
7400/9N00	7400
7400A	7400
7400DC	7400
7400N	7400
7400PC	7400
7401	7401
7401-6A	7401
7401-9A	7401
7401DC	7401
7401N	7401
7401PC	7401
7402	7402
7402(FM-DET)	708
7402-6A	7402
7402-9A	7402
7402DC	7402
7402N	7402
7402P	7402
7402PC	7402
7403	7403
7403(RECT)	505
7403-6A	7403
7403-9A	7403
7403DC	7403
7403N	7403
7403P	7403
7403PC	7403
7404	7404
7404-6A	7404
7404-9A	7404
7404A	7404
7404N	7404
7404PC	7404
7405	7405
7405-6A	7405
7405-9A	7405
7405N	7405
7405P	7405
7405PC	7405
7406	7406
7406N	7406
7406PC	7406
7407	7407
7407A	7407
7407N	7407
7407PC	7407
7408	7408
7408-1	222
7408-1(RCA)	222
7408-6A	7408
7408-9A	7408
7408A	7408
7408DC	7408
7408N	7408
7408PC	7408
7409-1(RCA)	222
7409DC	7409
7409PC	7409
7410	7410
7410-6A	7410
7410-9A	7410
7410DC	7410
7410N	7410
7410P	7410
7410PC	7410
7411	7411
7411-6A	7411
7411-9A	7411
7411DC	7411
7411PC	7411
7412	7412
7412DC	7412
7412PC	7412
7413	7413
7413(IC)	7413
7413PC	7413
7414	7414
7414(IC)	7414
7414PC	7414
7416	7416
7416N	7416
7416NA	7416
7416PC	7416
7417	7417
7417N	7417
7417NA	7417
7417PC	7417
7419	708
7420	7420
7420(IC)	7420
7420-6A	7420
7420-9A	7420
7420DC	7420
7420N	7420
7420PC	7420
7421DC	7421
7421PC	7421
7422DC	7422
7422PC	7422
7423	7423
7423DC	7423
7423PC	7423
7425	7425
7425DC	7425
7425PC	7425
7426	7426
7426DC	7426
7426PC	7426
7427	7427
7427(IC)	7427
7427DC	7427
7427PC	7427
7428	108
7429	123AP
7430	7430
7430-6A	7430
7430-9A	7430
7430DC	7430
7430PC	7430
7431	123AP
7432	7432
7432(IC)	7432
7432DC	7432
7432N	7432
7432PC	7432
7433	7433
7437	7437
7437(GE)	198
7437DC	7437
7437PC	7437
7438	7438
7438DC	7438
7438N	7438
7438PC	7438
7439DC	7439
7439PC	7439
7440	7440
7440-6A	7440
7440-9A	7440
7440PC	7440
7441-6A	7441
7441-9A	7441
7441DC	7441
7441PC	7441
7442	7442
7442ADC	7442
7442APC	7442
7442DC	7442
7442N	7442
7442PC	7442
7443	7443
7443ADC	7443
7443APC	7443
7443DC	7443
7443PC	7443
7444	7444
7444ADC	7444
7444APC	7444
7444DC	7444
7444PC	7444
7445	7445
7445DC	7445
7445PC	7445
7446	7446
7446A	7446
7446ADC	7446
7446APC	7446
7446PC	7446
7447	7447
7447BDC	7447
7447BPC	7447
7447DC	7447
7447PC	7447
7448	7448
7448DC	7448
7448PC	7448
7450-6A	7450
7450-9A	7450
7450DC	7450
7450PC	7450
7451	7451
7451-6A	7451
7451-9A	7451
7451DC	7451
7451PC	7451
7453-6A	7453
7453-9A	7453
7453DC	7453
7453PC	7453
7454	7454
7454-6A	7454
7454-9A	7454
7454DC	7454
7454PC	7454
7460	7460
7460-6A	7460
7460-9A	7460
7460DC	7460
7460PC	7460
7470	7470
7470-6A	7470
7470-9A	7470
7470DC	7470
7470PC	7470
7472	7472
7472-6A	7472
7472-9A	7472
7472DC	7472
7472PC	7472
7473	7473
7473-6A	7473
7473-9A	7473
7473DC	7473
7473F	7473
7473N	7473
7473P	7473
7473PC	7474
7474	7474
7474-6A	7474
7474-9A	7474
7474/9N74	7474
7474DC	7474
7474N	7474
7474PC	7474
7475	7475
7475-6A	7475
7475-9A	7475
7475DC	7475
7475PC	7475
7476	7476
7476-6A	7476
7476-9A	7476
7476DC	7476
7476PC	7476
7480DC	7480
7480PC	7480
7482-6A	7482
7482-9A	7482
7482DC	7482
7482PC	7482
7483	7483
7483DC	7483
7483PC	7483
7485	7485
7485DC	7485
7485PC	7485
7486	7486
7486DC	7486
7486PC	7486
7489	7489
7490	7490
7490-6A	7490
7490-9A	7490
7490ADC	7490
7490APC	7490
7490DC	7490
7490PC	7490
7491DC	7491
7491PC	7491
7492	7492
7492-6A	7492
7492-9A	7492
7492ADC	7492
7492APC	7492
7492DC	7492
7492PC	7492
7493	7493A
7493-6A	7493A
7493-9A	7493A
7493/9393	7493A
7493A	7493A
7493ADC	7493A
7493APC	7493A
7493DC	7493A
7493N	7493A
7493PC	7493A
7494DC	7494
7494PC	7494
7495	7495
7495DC	7495
7495PC	7495
7496	7496
7496DC	7496
7496PC	7496
7497	7497
7501	123AP
7502	289
7503	159
7505	123AP
7506	123AP
7507	123AP

PART NUMBER	NTE REPLACEMENT
7508	159
7509	123AP
7510	175
7510(TRANS)	175
7511	199
7513	128
7514	130
7515	123AP
7516	123AP
7517	123AP
7518	123AP
7519	199
7527-5A	138A
7550	5066A
7553	188
7554	139A
7566	116
7574	138A
7585	123AP
7586	123AP
7586(GE)	123AP
7587	123AP
7587(GE)	123AP
7588	123AP
7588(GE)	123AP
7589	123AP
7590	123AP
7590(GE)	123AP
7591(GE)	123AP
7593-2	108
7605UC	961
7610R	3062
7611R	3053
7620Y	3064
7621Y	3055
7625	1096
7626	106
7630G	3063
7631G	3054
7635	290
7637	123AP
7638	294
7639	123
7641	123AP
7642	108
7673	123AP
7675	123AP
7676	123AP
7701	125
7702-1A	125
7704-1	125
7706-1	125
7707	5065A
7708	5111A
7708-1	125
7709	5112A
7710	5112A
7710-1	125
7711	5114A
7711-1	125
7712	5115A
7712-1	125
7713	135A
7713-1	125
7714	5117A
7715	5119A
7717	5121A
7718	5122A
7719	5124A
7720	5125A
7722	614
7724	5130A
7725	5131A
7726	5133A
7727	5135A
7728	5136A
7729	5137A
7730	5139A
7731	5141A
7732	159
7733	5143A
7733(XSTR)	299
7734	5144A
7735	5145A
7736	5146A
7737	5147A
7738	5148A
7739	5150A
7740	5151A
7741	5152A
7805	960
7805A	960
7805C	960
7805CKC	309K
7805CT	960
7805H	960
7805K	309K
7805T	960
7806	962
7806T	962
7808	964
7808C	964
7808T	964
7810	108
7810(VLTG REG)	1932
7811	108
7812	966
7812(IC)	966
7812A	966
7812CDA	933
7812CT	966
7812CU	966
7812IC	966
7812P	966
7812T	966
7813	108
7814	108
7815	968
7815C	968
7815T	968
7816	123AP
7817	123AP
7818	958
7818T	958
7824	972
7824CT	972
7824T	972
7885-1	181
7885-2	181
7885-3	181
7905	961
7905K	1913
7905T	961
7906	963
7906T	963
7908	965
7908T	965
7909	128
7912	967
7912C	967
7912K	1915
7912T	967
7915	969
7915C	969
7915K	1919
7915T	969
7918	959
7918DA	1923
7918K	1923
7918T	959
7920-1	196
7921	5802
7921-1	197
7924	971
7924K	1925
7924T	971
7962	116
7991	199
7992	123AP
7993	158
8000-00030-007	123AP
8000-00030-008	315
8000-00030-009	103A
8000-00030-010	116
8000-00010-017	133
8000-00010-109	177
8000-00001-068	102A
8000-00003-040	131
8000-00003-033	123AP
8000-00003-034	233
8000-00003-035	289
8000-00003-036	289
8000-00003-037	290
8000-00003-038	102A
8000-00003-039	102A
8000-00003-041	299
8000-00003-042	299
8000-00003-043	299
8000-00003-044	116
8000-00003-045	109
8000-00003-046	177
8000-00003-41	235
8000-00003-43	224
8000-00004-003	319P
8000-00004-060	109
8000-00004-080	133
8000-00004-044	116
8000-00004-045	109
8000-00004-061	177
8000-00004-062	177
8000-00004-063	109
8000-00004-064	116
8000-00004-065	139A
8000-00004-066	177
8000-00004-067	177
8000-00004-068	116
8000-00004-079	123AP
8000-00004-081	132
8000-00004-082	123AP
8000-00004-083	237
8000-00004-084	237
8000-00004-085	289
8000-00004-086	103A
8000-00004-087	300
8000-00004-088	102A
8000-00004-089	159
8000-00004-85	123AP
8000-00004-184	177
8000-00004-185	186
8000-00004-239	137A
8000-00004-241	130
8000-00004-242	289
8000-00004-243	123AP
8000-00004-248	614
8000-00004-298	229
8000-00004-299	229
8000-00004-300	229
8000-00004-301	199
8000-00004-303	192
8000-00004-305	703
8000-00004-306	1045
8000-00004-307	1075A
8000-00004-P080	132
8000-00004-P079	108
8000-00004-P081	132
8000-00004-P082	128
8000-00004-P083	237
8000-00004-P084	195A
8000-00004-P085	289
8000-00004-P086	123AP
8000-00004-P088	102A
8000-00004-P089	159
8000-00004-P185	184
8000-00005-001	132
8000-00005-002	123AP
8000-00005-003	199
8000-00005-004	199
8000-00005-005	199
8000-00005-007	123AP
8000-00005-008	175
8000-00005-009	195A
8000-00005-010	195A
8000-00005-020	137A
8000-00005-011	237
8000-00005-012	175
8000-00005-013	347
8000-00005-014	1104
8000-00005-015	109
8000-00005-016	109
8000-00005-017	109
8000-00005-018	109
8000-00005-019	138A
8000-00005-021	139A
8000-00005-022	116
8000-00005-023	109
8000-00005-055	123AP
8000-00005-152	116
8000-00006-001	195A
8000-00006-002	237
8000-00006-003	123AP
8000-00006-004	159
8000-00006-005	107
8000-00006-006	130
8000-00006-007	109
8000-00006-008	177
8000-00006-009	139A
8000-00006-010	147A
8000-00006-146	137A
8000-00006-147	125
8000-00006-190	131
8000-00006-201	116
8000-00006-230	237
8000-00006-231	116
8000-00006-232	139A
8000-00006-278	295
8000-00006-280	123AP
8000-00006-281	177
8000-00009-089	199
8000-00009-174	123AP
8000-00009-177	229
8000-00009-178	132
8000-00009-280	316
8000-0004-004	159
8000-0004-042	109
8000-0004-044	116
8000-0004-063	109
8000-0004-066	177
8000-0004-086	103A
8000-0004-P060	109
8000-0004-P080	133
8000-0004-P061	177
8000-0004-P062	177
8000-0004-P063	109
8000-0004-P064	177
8000-0004-P065	139A
8000-0004-P066	177
8000-0004-P067	116
8000-0004-P068	116
8000-0004-P079	123AP
8000-0004-P081	133
8000-0004-P082	123AP
8000-0004-P083	195A
8000-0004-P084	195A
8000-0004-P085	123AP
8000-0004-P086	123AP
8000-0004-P088	158
8000-0004-P089	159
8000-0004-P185	186
8000-0004-P-061	116
8000-0004-P060	109
8000-0004-P061	177
8000-0004-P062	177
8000-0004-P063	109
8000-0004-P064	177
8000-0004-P065	139A
8000-0004-P066	177
8000-0004-P067	116
8000-0004-P068	116
8000-0004-P079	123AP
8000-0004-P080	133
8000-0004-P081	132
8000-0004-P082	123AP
8000-0004-P083	128
8000-0004-P084	128
8000-0004-P085	123AP
8000-0004-P086	103A
8000-0004-P088	102A
8000-0004-P089	159
8000-0005-001	132
8000-0005-002	107
8000-0005-003	107
8000-0005-004	199
8000-0005-007	123AP
8000-0005-008	130
8000-0005-009	123AP
8000-0005-010	128
8000-0005-020	137A
8000-0005-011	128
8000-0005-015	109
8000-0005-016	109
8000-0005-017	109
8000-0005-018	109
8000-0005-019	138A
8000-0005-021	139A
8000-0005-022	116•
8000-0005-023	109
8000-0009-089	199
8000-00011-004	123AP
8000-00011-0048	161
8000-00011-050	152
8000-00011-060	109
8000-00011-041	116
8000-00011-042	519
8000-00011-043	139A
8000-00011-044	116
8000-00011-045	601
8000-00011-046	109
8000-00011-047	123AP
8000-00011-048	123AP
8000-00011-049	289
8000-00011-051	195A
8000-00011-052	237
8000-00011-053	220
8000-00011-054	132
8000-00011-055	132
8000-00011-064	139A
8000-00011-086	103A
8000-00011-103	138A
8000-00011-104	116
8000-00011-105	156
8000-00011-151	195A
8000-00011-166	612
8000-00012-040	192
8000-00012-038	112
8000-00012-039	123
8000-00012-041	703
8000-00016-127	1100
8000-00028-040	155
8000-00028-037	229
8000-00028-038	289
8000-00028-039	236
8000-00028-041	152
8000-00028-042	7404
8000-00028-043	7493A
8000-00028-044	74145
8000-00028-045	177
8000-00028-047	140A
8000-00028-206	229
8000-00029-006	123AP
8000-00029-007	123AP
8000-0030-009	103A
8000-00032-030	1058
8000-00032-025	123AP
8000-00032-026	161
8000-00032-027	103A
8000-00032-028	236
8000-00034-010	116
8000-00035-001	116
8000-00035-002	116
8000-00035-003	229
8000-00038-001	295
8000-00038-003	74161
8000-00038-004	7400
8000-00038-005	74H22
8000-00038-006	7493A
8000-00038-007	7474
8000-00038-008	177
8000-00038-009	109
8000-00038-010	614
8000-00041-040	161
8000-00041-015	109
8000-00041-016	109
8000-00041-017	135A
8000-00041-018	139A
8000-00041-019	177
8000-00041-041	199
8000-00041-042	199
8000-00041-043	186
8000-00041-044	235
8000-00041-046	229
8000-00041-047	295
8000-00042-007	519
8000-00042-013	222
8000-00042-014	6402
8000-00042-015	5401
8000-00043-020	158
8000-00043-019	161
8000-00043-021	139A
8000-00043-064	154
8000-00043-065	236
8000-00043-067	135A
8000-00043-068	139A
8000-00045-004	7447
8000-00047-006	981
8000-00049-010	116
8000-00049-020	614
8000-00049-060	235
8000-00049-021	135A
8000-00049-053	229
8000-00049-054	229
8000-00049-055	123AP
8000-00049-056	159
8000-00049-057	123AP
8000-00049-059	293
8000-00049-061	293
8000-00049-062	312
8000-00053-004	746
8000-00057-011	139A
8000-00058-003	137A
8000-00058-004	140A
8000-00058-009	1192
8000-004-P061	125
8000-004-P063	109
8000-004-P064	125
8000-004-P067	125
8000-004-P068	125
8000-004-P089	129
8000-0016-129	1100
8000-0028-042	7404
8000-0058-006	746
8000-0095-010	195A
8003(FISHER)	222
8003-114	123AP
8003-115	116
8005(PENNCREST)	181
8005-3	704
8007-0	704
8007-1	704
8007-3	704
8007-4	704
8007C	940
8008-1	704
8008-3	704
8009-0	704
8009-4	704
8010-51	614
8010-52	177
8010-53	109
8010-171	1045
8010-172	1120
8010-173	132
8010-174	161
8010-175	161
8010-176	123AP
8020-202	177
8020-203	116
8020-204	199
8020-205	123AP
8020-206	152
804005	74LS00
8050	289A
8050C	289A
8051-M51358P	1545
8070-4	102A
8071-4	102A
8072-4	102A
8073-4	102A
8074-4	123AP
8075-4	123AP
8080	8080A
8080A	8080A
8080A-1	8080A
8080A-2	8080A
8098	749
8102-206	116
8102-207	123AP
8102-208	199
8102-209	123AP
8102-210	131MP
8106-207	161
8164-1(RCA)	615P
8164-2(RCA)	615P
8175-7937	943M
8200-202	199
8200-203	199
8200-204	226
8210-1203	123AP
8212	8212
8214	8214
8216	8216
8216(INTEL)	8216
8216P	8216
8255	8255
8255A	8255
8255APC	8255
8281	123AP
8281-1	123AP
8300-8	116
8301	159
8302	123AP
8303	129
8304	128
8305-28AT00	435K28
8305-28ATOO	435K28
8305-30AT00	435K30
8305-30ATOO	435K30
8305-42AT00	435K42
8305-42ATOO	435K42
8305-64AT00	435K64
8305-64ATOO	435K64
8319-001	130
8394	199
8400	7400
8400-1	129
8400-1A	129
8400-1B	129
8401	7401
8402	7402
8403	7403
8404	7404
8405	159
8405(C)	7405
8406	7406
8407	7407
8408	7408
8409	7409
8409-07100	294
8409-07100-1	32
8409-07004	290A
8409-07211	85
8409-11102	519
8409-11103	519
8409-11152	519
8409-11206	5332
8409-12317	5021T1
8409-12417	5084A
8413	7413
8414	7413
8416	7416
8417	7417
8420	7420
8422	7422
8423	7423
8425	7425
8427	7427
8428	7428
8430	7430
8432	7432
8433	7433
8437	7437
8438	7438
8440-122	123A
8440-123	123AP
8440-124	199
8440-126	123AP
8440P1	912
8442	7442
8443	7443
8444(DIGITAL)	7444
8445(CHRY)	1232
8445(DIGITAL)	7445
8446	7446
8446A	7446
8447	7447
8447A	7447
8448	7448
8450	7450
8451	7451
8453	7453
8454	7454
8460	7460
8470	7470
8471	186
8471(SYLVANIA)	188
8472	7472
8473	7473
8474	7474
8475	7475
8476	7476
8480	7480
8482	7482
8483	7483
8483A	7483
8484	7494
8485	7485
8486	7486
8489	7489
8490A	7490
8491A	7491
8492A	7492
8493A	7493A
8495A	7495
8496	7496
8500-201	102A
8500-202	102A
8500-203	102A
8500-204	131
8500-206	116
8503	107
8504	123AP
8509	123AP
8513A	506
8517	293
8520(CHRY)	1232
8521	123AP
8522	159
8523	123AP
8540	159
8550C	290A
8554-9	128
8564-1	310
8564-2(RCA)	308
8600	123AP
8601	159
8602	123AP
8606	108
8607	108
8609	108
8611	108
8614 007 0	123AP
8620	175
8624-003	129
8710-51	614
8710-52	177
8710-53	109
8710-54	139A
8710-55	116
8710-161	132
8710-162	108
8710-163	123AP
8710-164	123AP
8710-165	123AP
8710-166	123AP
8710-167	123AP
8710-168	123AP
8710-169	159
8710-170	186
8710-171	1100
8710-172	1142
8719-900-26	506
8800-201	116
8800-202	123AP
8800-203	123AP
8800-204	123AP
8800-205	152
8800-206	116
8840-52	614
8840-53	177
8840-54	109
8840-55	139A
8840-56	116
8840-121	312
8840-122	123AP
8840-123	229
8840-124	123AP
8840-126	199
8840-161	132
8840-162	107
8840-163	123AP
8840-164	123AP
8840-165	123AP
8840-166	123AP
8840-167	123AP
8840-168	123AP
8840-169	186
8840-170	1100
8864-1	116
8867	159
8868-6	128
8868-7	199
8868-8	123AP
8880-3	128
8883-2	121
8883-4	128
8886-2	123AP
8888-00005-013	295
8910-51	614
8910-52	177
8910-53	110MP
8910-54	5072A
8910-55	116
8910-141	132
8910-142	229
8910-143	123AP
8910-144	199
8910-145	123AP
8910-146	186A
8910-147	1100
8910-148	1142
8999-115	104
8999-201	116
8999-202	102A
8999-203	158
8999-205	116
9005-0	121
9011	123AP
9011(G)	123AP
9011D	123AP
9011E	108
9011F	229
9011F(TUNER)	108
9011G	123AP
9011H	229
9011I	123AP
9012	290
9012D	159
9012E	159
9012F	159
9012G	159
9012H	159
9012HE	102A
9012HF	102A
9012HG	106
9013	123AP
9013D	123AP
9013E	123AP
9013G	123AP
9013H	123AP
9013HF	123AP
9013HG	123AP
9013HH	123AP
9014	123AP
9014(D)	123AP
9014(EBC)	199
9014B	123AP
9014B(EBC)	199
9014C	123AP
9014C(EBC)	199
9014D	289A
9014D(EBC)	199
9015	294
9015A	290A
9015B	290A
9015C	290A
9015D	290A
9016	229
9016(F)	123AP
9016(G)	123AP
9016D	108
9016E	108
9016F	229
9016G	107
9016H	107
9016I	107
9018	108
9018D	108
9018E	229
9018F	108
9018G	108
9018H	108
9018I	108
9033	123AP
9033(SYLVANIA)	123AP
9033-1	123AP
9033-2	199
9033-3	199
9033-4	199
9033-5	199
9033BROWN	123AP
9033G	128
9033G(SYLVANIA)	123AP
9033GREEN	199
9033ORANGE	199
9033Q	199
9033RED	199
9033WHITE	199
9042B	287
9050-1	910D

PART NUMBER	NTE REPLACEMENT
9080	8080A
9080A	8080A
9093-1-6A	9093
9093-9-6A	9093
9093-9-7A	9093
9093DC	9093
9093PC	9093
9094-1-6A	9094
9094-9-6A	9094
9094-9-7A	9094
9094DC	9094
9094PC	9094
9097-1-6A	9097
9097-9-6A	9097
9097-9-7A	9097
9097DC	9097
9097PC	9097
9099-1-6A	9099
9099-9-6A	9099
9099-9-7A	9099
9099DC	9099
9099PC	9099
9100-1	116
9112C	294
9113C	293
9128-1503-001	177
9135PC	9135
9137-C-1004	9945
9137-C-1020	9962
9144-60	787
9144-61	788
9157PC	9157
9158PC	9158
9203-8	125
9279	128
9300	108
9300-5	116
9300-6	116
9300-7	116
9300A	108
9300B	108
9300Z	108
9301-1	116
9302-2	117
9302-2A	117
9302-3	116
9307	7448
9309DC	8309
9309PC	8309
9314	108
9314DC	8314
9314PC	8314
9315DC	7441
9315PC	7441
9316/74161	74161
9317B	7446
9317C	7446
9328DC	8328
9328PC	8328
9330-006-11112	116
9330-011-70112	102A
9330-092-90112	137A
9330-228-60112	177
9330-229-20112	116
9330-229-60112	107
9330-229-70112	107
9330-688-30112	199
9330-767-60112	159
9330-908-10112	159
9334DC	74LS259
9334PC	74LS259
9341DC	74181
9341PC	74181
9342DC	74182
9345DC	7445
9345PC	7445
9348-3	116
9352DC	7442
9352PC	7442
9353DC	7443
9353PC	7443
9354DC	7444
9354PC	7444
9357A	7446
9357ADC	7446
9357APC	7446
9357B	7447
9357BDC	7447
9357BPC	7447
9358	7448
9358DC	7448
9358PC	7448
9360DC	74192
9360PC	74192
9366DC	74193
9366PC	74193
9367-1	128
9370DC	8370
9370PC	8370
9374	8374
9374DC	8374
9374PC	8374
9375DC	7475
9375PC	7475
9377	7497
9380DC	7480
9380PC	7480
9382DC	7482
9382PC	7482
9383DC	7483
9383PC	7483
9385DC	7485
9385PC	7485
9390	102
9390DC	7490
9390PC	7490
9391	102
9391DC	7491
9391PC	7491
9392DC	7492
9392PC	7492
9393	7493A
9393DC	7493A
9393PC	7493A
9394DC	7494
9394PC	7494
9395DC	7495
9395PC	7495
9396DC	7496
9396PC	7496
9400-8	102A
9400-9	102A
9401-7	102A
9403-2	121
9403-3	160
9403-6	160
9403-7	102A
9403-8	126
9403-9	102A
9404-0	121
9404-2	128
9404-3	195A
9404-9	175
9405-0	128
9405-1	128
9405-2	129
9409-4	175
9410A	123AP
9426B	108
9426B,C	108
9426C	108
9440	177
9501	199
9502	199
9510-1	160
9510-2	160
9510-3	126
9510-7	160
9513	108
9521	722
9564	102A
9582	185
9600	123AP
9600-5	123AP
9600C	108
9600F	108
9600G	108
9600H	108
9601	108
9601-12	108
9602	9602
9602PC	9602
9604E	108
9604F	108
9606	5014A
9607	5015A
9617K	128
9618	229
9623	123AP
9623F	108
9623G	108
9623H	108
9625F	108
9625H	108
9630C	108
9631U	289A
9644	177
9646	177
9650-001	116
9652H	159
9654-0330.31(NPN)	152
9654-0330.31(PNP)	153
9654-0331.31(NPN)	152
9654-0331.31(PNP)	153
9664PC	75492B
9665	2011
9665PC	2011
9666	2012
9666PC	2012
9667	2013
9667PC	2013
9668	2014
9668PC	2014
9692-1	723
9693-1	787
9696H	128
9803	177
9842FF	723
9861B-43	109
9920-3-6	125
9920-4	102A
9920-5	102A
9920-6-1	123AP
9920-6-2	123AP
9920-7-2	123AP
9921-7	102A
9921-8	102A
9925-0	121
9925-2	124
9925-2-1	124
9925-2-2	124
9942PC	74182
9970	5004A
9971	5006A
9972	5008A
9973	5010A
9979-1(RCA)	161
9981	5112A
9982	5114A
9983	5116A
9984	5119A
9992	5241A
9993	5243A
9994	5246A
10003	181
10010	5870
10020	5074A
10031	113A
10032	102A
10036	102A
10036-001	129
10037	102A
10038	102A
10039	102A
10100	125
10110	125
10180	116
10181	109
10226/2	123AP
10300	159
10300-12	129
10302-01	7430
10302-02	7420
10302-03	7410
10302-04	7400
10302-05	7451
10302-06	7405
10386	116
10416-009	123AP
10416-010	128
10508	106
10655A03	738
10655A03A	738
10655A05	749
10655B03	738
10655B13	712
10655C05	749
10658A01	788
10795-5	9945
10795-6	9946
10795-8	9962
10795-9	9093
10795-10	9099
10895	519
10909	116
11000	234
11112	135A
11200-1	7410
11202-1	7404
11203-1	7493A
11204-1	74193
11205-1	7420
11206-1	7470
11207-1	7402
11208-1	7430
11209-1	7483
11211-1	7409
11213-1	7474
11214-1	7440
11216-1	7400
11229	278
11233-2	7454
11236-1	128
11236-2	224
11236-3	130
11252	109
11252-0	108
11252-1	108
11252-2	108
11252-3	123AP
11252-4	121
11252-5	128
11252-6	224
11252-7	224
11273-1	74121
11274-1	7403
11276-1	7496
11282-6	116
11303-9	116
11305-0001	519
11332-1	116
11339-2	116
11339-8	108
11352-78	519
11386-9	505
11393-8	108
11399-8	117
11401-3	116
11426-7	108
11503-9	116
11506-3	121
11522-5	123AP
11522-7	160
11522-8	160
11522-9	160
11526-8	121
11526-9	121
11527-5	126
11528-1	121MP
11528-2	121MP
11528-3	121MP
11528-4	121MP
11555-9	116
11559-9	116
11586-7	117
11587-5	123AP
11605-2	116
11606-8	127
11607-2	126
11607-3	108
11607-4	123AP
11607-5	124
11607-8	123AP
11607-9	108
11608-0	108
11608-2	108
11608-3	108
11608-5	123AP
11608-6	127
11608-7	127
11608-8	127
11608-9	127
11609-1	102A
11609-2	123AP
11619-8	108
11619-9	108
11620-0	108
11620-1	108
11620-2	160
11620-3	102A
11620-6	102A
11620-7	160
11620-8	160
11620-9	160
11658-8	123AP
11668-3	160
11668-4	160
11668-5	102A
11668-6	102A
11668-7	103A
11675-6	126
11675-7	102A
11687-5	123AP
11699-7	102A
11746	116
12011	177
12020-02	152
12044-0021	175
12047-0023	192
12048-0011	129
12061-0013	325
12101	177
12110-0	100
12110-3	100
12110-4	100
12110-5	100
12110-6	102A
12110-7	102A
12112-0	102A
12112-8	100
12112-C	123AP
12112-D	123AP
12112-E	123AP
12112-F	123AP
12112C	123AP
12112D	123AP
12112E	123AP
12112F	123AP
12113-5	160
12113-7	160
12113-8	160
12113-9	160
12114-8	102A
12115-0	160
12115-7	160
12116-1	100
12116-2	100
12116-4	102A
12117-9	100
12118-0	100
12118-4	102A
12118-6	100
12118-9	126
12119-0	160
12119-1	102A
12119-2	102A
12122-5	102A
12122-6	102A
12122-7	102A
12122-8	160
12122-9	160
12123-0	160
12123-1	160
12123-2	102A
12123-3	160
12123-4	100
12123-5	100
12123-6	100
12124-0	100
12124-1	100
12124-2	126
12124-3	126
12124-4	126
12124-6	102A
12125-4	100
12125-6	160
12125-7	126
12125-8	160
12125-9	160
12126-0	160
12126-6	102A
12*26-7	102A
12127-0	121
12127-1	121
12127-2	102A
12127-3	100
12127-4	102A
12127-5	100
12127-6	123AP
12127-7	123AP
12127-8	123AP
12127-9	123AP
12128-9	100
12163	104
12173	100
12174	100
12175	100
12176	100
12178	104
12180	126
12183	100
12191	100
12192	100
12193	100
12195	102A
12196	102A
12255-235	519
12429	118
12429(HEATHKIT)	118
12454	233
12536	130
12536A	130
12537	219
12538	175
12539	184
12546	154
12550	156
12593	123AP
12594	159
12602	116
12634	116
12685	506
12720	116
12736	116
12746	116
12764-2	2764
12768	116
12786	116
12788	116
12803	116
12808	109
12837	116
12844	116
12850	109
12871	113A
12888	159
12901	134A
12951-1	904
13002-3	130
13002-4	130
13006-2(FISHER)	177
13030-4	181
13150L	177
13159-2	175
13162	159
13213E4252	128
13217E1513	311
13217E-1513	311
13298	130
13299	211
13517	912
13609	552
13782	116
14002-2(FISHER)	145A
14002-10(FISHER)	5084A
14013	4013B
14027	197
14049	4049
14070	4070B
14081	4081B
14083-3	199
14126-1	116
14128-2	159
14173I8	194
14207	947
14303	123AP
14305	960
14529	4529B
14573	105
14584(CMOS)	4584B
14588	4511B
14588-9	116
14692	128
14817	1625
14995	128
14996-1	128
14996-2	128
15009	102A
15024	121
15027	121
15027(DIODE)	109
15106KOA	5374
15122	177
15323	159
15332	85
15352R	614
15354-2	102
15354-3	104
15354-14	100
15405-1	9946
15405-2	9949
15405-4	9932
15472	1712
15477	1710
15486	128
15514	85
15521	290A
15528	116
15630	615P
15735	5013A
15809-1	123
15810-1	123AP
15820-1	123
15835-1	123
15840-1	123AP
15841-1	123AP
15927	104
15942	754
16001	130
16002-039	109
16029	196
16039	196
16065	128
16073	5643
16082	128
16083	130
16088	7490
16111	5635
16113	152
16114	175
16115	196
16140	311
16140A	311
16163	196
16164	152
16165	196
16166	152
16167	197
16169	197
16170	5635
16175	197
16176	130
16181	152
16182	152
16190	108
16191	128
16194	108
16201	130
16207	152
16208	5635
16230	130
16232	124
16234	130
16235	130
16237	199
16238	5675
16239	129
16240	130
16241	152
16254	128
16259	124
16261	130
16266	130
16267	181
16277	196
16279	197
16287	130
16289	5635
16291	5635
16292	130
16299	130
16305	152
16306	197
16319	130
16320	130
16334	152
16335	152
16336	152
16338	130
16341	196
16342	197
16536	316
16598	102
16599	121
16631	311
16681	116
16958	102
16959	121
17002	116
17011-1	5547
17042	100
17043	100
17045	159
17047-1	102
17135	5429
17142	102
17143	102
17144	123
17246-33	5642
17412-5	123AP
17443	116
17444	123
17607-1	127
17666	5024A
17846	1781
17887	121
17945	121
17973A	147A
18109	102
18112	123AP
18310	124
18410-41	614
18410-42	109
18410-43	5072A
18410-141	132
18410-142	107
18410-143	123AP
18410-144	199
18410-145	123AP
18410-146	123AP
18410-147	186A
18410-148	788
18411	346
18441	346
18493	126
18509	123AP
18529	100
18530	102
18540	160
18541	160
18555	123AP
18600-51	614
18600-52	177
18600-53	109
18600-54	5072A
18600-151	107
18600-152	123AP
18600-153	123AP
18600-154	1100
18600-156	1058
18600-I51	107
18601	102
18611	102
18731	102
19042	116
19278	124
19420	108
19500-253	199
19621	112
19645	123AP
19680	159
19865	116
20011	159
20103	199
20112	15007
20141	198
20294	241
20295	152
20414(H KARDON)	140A
20418(H KARDON)	121MP
20505S	5987
20731(H KARDON)	128
20737(H KARDON)	140A
20738	123
20739	129
20810-21	116
20810-22	116
20810-91	199
20810-92	199
20810-93	128
20810-94	186
20989	124
21008-002	506
21017(H KARDON)	123A
21067(H KARDON)	107
21083(H KARDON)	123A
21168(H KARDON)	129
21198(H KARDON)	128
21201	128
21221	128
21280	181
21290	128
21415(H KARDON)	128
21606-1	127
21676A	128
22008	159
22009	172A
22055(H KARDON)	160
22134(H KARDON)	312
22158	123AP
22164-000	519
22458(H KARDON)	159
22577(H KARDON)	121
22595-000	159
22605-005	159
22635-002	123AP
22635-003	123AP
22810-173	123AP
22810-174	199
22859(H KARDON)	177
22860(H KARDON)	107
22861(H KARDON)	123A
22874(H KARDON)	726
22881	226MP
22939	198
23114-050	129
23114-060	108
23114-070	130
23114-046	123AP
23114-051	129
23114-052	154
23114-053	123AP
23114-054	123AP
23114-056	108
23114-057	108
23114-061	102A
23114-078	108
23114-082	123AP
23114-095	123AP
23114-097	127
23114-104	108
23115-022	118
23115-042	125
23115-057	123AP
23115-058	123AP
23115-072	125
23115-085	156
23125-037	108
23190(H KARDON)	181
23212(H KARDON)	123A
23221(H KARDON)	123A
23222(H KARDON)	129
23223(H KARDON)	128
23311-006	121
23316	123AP
23425(H KARDON)	143A
23606	132
23648	128
23754	152
23762	130
23785	126
23785(SYLVANIA)	102A
23785-1	126
23785-1(SYLVANIA)	102A
23826	159
23826(SYLVANIA)	159
23843(H KARDON)	130
23843(H,KARDON)	130

PART NUMBER	NTE REPLACEMENT
23844(H KARDON)	123A
23845(H KARDON)	159
23879	5529
24002	107
24198	126
24198(RECT)	116
24216(H KARDON)	130
24218(H KARDON)	184
24219(H KARDON)	185
24225(H KARDON)	312
24306(H KARDON)	190
24451	711
24560A	124
24785	102A
24833(H KARDON)	126
24834(H KARDON)	126
24836(H KARDON)	109
24859(H KARDON)	199
24873(H KARDON)	199
24879(H KARDON)	128
24880(H KARDON)	129
24925(H KARDON)	5071A
24972(H KARDON)	123A
25011(HONEYWELL)	123AP
25055(H KARDON)	123A
25056(H KARDON)	123A
25059(H KARDON)	123A
25114-101	102A
25114-102	102A
25114-103	102A
25114-104	102A
25114-116	123AP
25114-121	108
25114-130	123AP
25114-143	124
25114-161	123AP
25115-115	116
25201-001	109
25202-002	116
25211-200	138A
25260-61-067	177
25538(H KARDON)	199
25539(H KARDON)	192
25566-01	126
25566-21	128
25566-50	128
25566-62	129
25566-63	128
25566-76	128
25620(H KARDON)	160
25642-020	126
25642-030	126
25642-040	126
25642-031	126
25642-041	126
25642-110	126
25642-115	126
25642-120	126
25651-020	102A
25651-021	102A
25651-033	102A
25655-055	102A
25655-056	102A
25657-050	102A
25658-120	131
25658-121	131
25661-020	121
25661-022	104
25671-020	161
25671-021	161
25671-023	161
25672-016	154
25762-010	225
25762-012	225
25810-51	116
25810-52	177
25810-53	109
25810-54	5072A
25810-55	109
25810-107	1081A
25810-161	123AP
25810-162	123AP
25810-163	123AP
25810-164	1100
25810-166	1087
25810-167	1081A
25840-51	116
25840-52	116
25840-53	109
25840-54	5072A
25840-55	109
25840-161	123AP
25840-162	199
25840-163	192
25840-165	1142
25840-166	1087
25840-167	1081A
25972(H KARDON)	123A
26235-1	116
26284(H KARDON)	128
26285(H KARDON)	129
26551(H KARDON)	722
26587	703
26587-1	703
26666-1	128
26810-51	109
26810-52	140A
26810-151	229
26810-151(1)	161
26810-152	159
26810-153	199
26810-154	123AP
26810-155	289
26810-157	801
26810-158	1052
26810-159	1155
27065(H KARDON)	5188A
27092(H KARDON)	5075A
27113-100	116
27123-050	116
27123-070	116
27123-100	116
27123-120	116
27125-080	123AP
27125-090	123AP
27125-110	128
27125-120	102A
27125-140	123AP
27125-150	102A
27125-160	123AP
27125-170	102A
27125-270	123AP
27125-300	123AP
27125-310	103A
27125-330	102A
27125-340	102A
27125-350	102A
27125-360	100
27125-370	123AP
27125-380	128
27125-460	199
27125-470	199
27125-480	102A
27125-490	103A
27125-500	123AP
27125-530	123AP
27125-540	102A
27125-550	102A
27126-060	131
27126-090	121
27126-100	130
27127-550	123AP
27128	21128
27128-3	21128
27128-4	21128
27128-25	21128
27128-30	21128
27128-45	21128
27128-250	21128
27213(H KARDON)	152
27214(H KARDON)	152
27379(H KARDON)	123A
27571(H KARDON)	186
27614(H KARDON)	108
27615(H KARDON)	108
27616(H KARDON)	108
27617(H KARDON)	108
27618(H KARDON)	107
27619(H KARDON)	106
27620(H KARDON)	123A
27840-41	116
27840-42	109
27840-43	177
27840-161	123AP
27840-162	123AP
27840-163	1087
27840-164	1081A
27910-12150	123
27910-12153	102
27987(H KARDON)	152
28071(H KARDON)	801
28222-3(SYLVANIA)	182
28287	109
28311	154
28437	2315
28474	130
28810-61	116
28810-62	614
28810-63	177
28810-64	110MP
28810-65	5072A
28810-171	132
28810-172	107
28810-173	123AP
28810-174	123AP
28810-175	1082
28810-176	1142
28810-177	1052
28810-178	1081A
28977	128
29037(H KARDON)	259
29076-005	161
29076-006	161
29076-023	159
29471(H KARDON)	233
29472(H KARDON)	233
29483(H KARDON)	199
29484(H KARDON)	297
29485(H KARDON)	298
29486(H KARDON)	300
29810-63	109
29810-173	161
29810-178	184
29810-179	788
29810-180	801
30201	158
30202	158
30203	121
30204	102
30206	102
30207	102
30208	100
30208-1	102A
30208-2	102
30210	123
30211	121
30213	126
30214	126
30215	126
30215(RCA)	121
30216	102
30216(RCA)	121
30217	126
30218	102
30218(RCA)	160
30219	123
30221	126
30222	126
30223	126
30224	123
30226	123
30227	123AP
30228	123AP
30229	123AP
30230	126
30231	100
30234	124
30235	123AP
30236	175
30238	160
30239	160
30240	160
30241	123AP
30242	123AP
30243	123AP
30244	102
30245	124
30246	121
30246A	121
30247	126
30248	123
30253	123AP
30254	175
30256	175
30257	124
30259	123
30263	102A
30267(NPN)	103A
30267(PNP)	102A
30268	123AP
30269	123AP
30270	159
30271	185
30272	184
30273	160
30274	126
30276	130
30278	129
30289	123AP
30290	159
30291(NPN)	128
30291(PNP)	106
30292	108
30293	102A
30294	152
30302	104
30302(RCA)	102A
30510	125
30613	123AP
30710	712
30929W	5013T1
31001	123AP
31003	123AP
31004-1	153
31005	159
31006	129
31009	123AP
31015	234
31018-277-530	159
31018-277-560	5013A
31032-0	129
31267-406-480	519
31450	156
32109-301-070	74LS00
32109-410-270	4066B
32109-410-280	4066B
32119-101-940	1545
32119-102-010	1838
32119-102-020	1845
32119-102-050	1728
32119-102-060	1845
32119-102-090	1728
32119-102-260	1545
32119-102-300	1674
32119-102-570	1674
32119-102-730	1780
32119-102-760	966
32119-103-110	1830
32119-201-310	4053B
32119-801-130	1777
32119-901-020	15041
32119-901-110	966
32119-901-130	1777
32137-103-280	159
32137-103-430	159
32137-301-050	108
32137-301-180	123AP
32137-301-530	399
32137-301-540	399
32137-301-550	24
32137-301-560	24
32137-301-720	123AP
32137-401-530	159
32139-101-420	290A
32139-101-530	290A
32139-301-090	85
32139-301-140	399
32139-301-230	198
32139-301-240	198
32139-301-350	198
32139-302-350	198
32139-302-810	375
32139-304-560	289A
32149-101-850	398
32149-101-860	398
32149-201-450	398
32149-301-020	375
32149-301-040	2302
32149-301-050	2302
32149-301-140	46
32149-401-040	2302
32149-401-050	2302
32157-301-170	85
32159-301-020	85
32159-301-030	399
32159-301-170	123AP
32159-301-180	85
32159-301-230	451
32159-301-290	399
32159-701-020	85
32167-103-080	552
32167-201-070	552
32167-201-160	116
32167-201-180	116
32167-206-110	552
32167-206-670	552
32167-208-510	552
32167-208-550	552
32167-208-570	552
32167-208-580	125
32167-301-630	552
32167-301-670	558
32167-401-630	5022A
32167-401-800	5011A
32167-401-870	5004A
32167-403-850	147A
32167-406-080	5010A
32167-406-480	519
32167-406-630	5022A
32167-407-480	519
32167-407-800	5011A
32167-408-080	5013A
32169-101-080	109
32169-101-130	177
32169-201-230	580
32169-201-240	506
32169-202-220	552
32169-206-110	552
32169-207-110	580
32169-208-510	552
32169-208-530	125
32169-208-570	552
32169-218-130	552
32169-301-610	580
32169-301-630	552
32169-301-670	558
32169-401-070	552
32169-403-560	5013A
32169-403-850	147A
32169-404-200	5010A
32169-408-080	5013A
32169-408-570	552
32309-024-010	3092
32980	709
33137-103-430	159
33188-2	130
33201-1	712
33201-2	712
33324	614
33509-1	159
33563	123AP
33952	614
33989-2069	121
34001PC	4001B
34002PC	4002B
34005-1	727
34011PC	4011B
34012PC	4012B
34013PC	4013B
34014PC	4014B
34015PC	4015B
34016PC	4016B
34017PC	4017B
34019PC	4019B
34020PC	4020B
34021PC	4021B
34022	121
34023PC	4023B
34025PC	4025B
34027PC	4027B
34028PC	4028B
34029PC	4029B
34030PC	4030B
34040PC	4040B
34042PC	4042B
34044	128
34048	126
34048-1	708
34049-1	722
34050PC	4050B
34051PC	4051B
34052PC	4052B
34055PC	4055B
34066PC	4016B
34068PC	4068B
34069PC	4069
34070PC	4030B
34071PC	4071B
34077PC	4077B
34078PC	4078B
34081PC	4081B
34085PC	4085B
34086PC	4086B
34098	126
34099	126
34099PC	4099B
34100	126
34101	5527
34118	160
34119	100
34174	116
34201	156
34202-1	727
34208	130
34219	100
34220	100
34221	100
34262	102A
34298	121
34315	121
34342	160
34389	160
34394	116
34405	5802
34423	160
34424	506
34425	121
34452-1	709
34493P	102
34503-1	722
34512PC	4512B
34518PC	4518B
34520PC	4520B
34526	121
34527PC	4527B
34539PC	4539B
34553	160
34555PC	4555B
34556PC	4556B
34588A	128
34675	160
34715	104
34871	102
34894	116
34923	158
34942	160
34966	176
35001	130
35002	161
35004	108
35044	121
35045	102
35059-1	712
35059-2	712
35070	160
35084	104
35086	102
35144	121
35168	126
35169	160
35170	160
35201	104
35210	128
35212	128
35218	176
35219	142A
35231	121
35242	123AP
35259	107
35260	104
35287	116
35287A	116
35289	116
35303	128
35306	116
35333	125
35349	121
35383	128
35405	175
35449	108
35452-2	158
35454	102
35454-1	158
35454-2	158
35454-3	158
35500	116
35524	181
35590	102A
35604	5804
35628	102A
35677	102A
35678	102A
35684-107-534	966
35684-114-010	376
35684-116-010	54
35728	121
35792	102A
35815	160
35816	102A
35817	102A
35818	126
35819	158
35820	102
35820-1	158
35820-2	158
35820-3	158
35824	102A
35860	116
35885A	121
35885B	121
35888	128
35950	102
35951	121
35952	102
35953	102
35954	102
35955	102
36091R	5883
36145	128
36147	5802
36201	116
36203	121
36212	108
36212V1	108
36213	188
36213A2	195A
36274	175
36303	121
36304	121
36304-4	121
36312	121
36313	100
36320	175
36340	176
36344	124
36359-4	121MP
36370-05490	175
36387	128
36395	121
36446-2	743
36466	128
36477	121
36503	116
36503(AIRCASTLE)	116
36508	109
36534	102
36535	117
36537	117
36539	142A
36545	130
36549	116
36554	116
36555	116
36557	102
36558	102
36559	126
36560	126
36563	126
36564	116
36577	129
36578	108
36579	128
36580	123AP
36581	108
36582	132
36591	5802
36634	124
36642	130
36642D	130
36643	128
36643A	128
36662	311
36673	176
36680	311
36680A	311
36682	128
36687	121
36695	176
36748	128
36800-2	121
36800-3	121
36800-4	121
36800-5	121
36800-6	121
36800-7	121
36803	311
36816	100
36846	130
36847	108
36848	311
36849	311
36850	311
36855	130
36892	130
36896	104
36910	121
36913	195A
36917	123AP
36918	108
36919	108
36920	123AP
36921	123AP
36946	130
36953	130
36971	121
36997	311
37077	175
37126-1	116
37267	130
37269	129
37278	160
37279	103A
37280	128
37287	128
37334	161
37383	108
37384	108
37393	128
37431	311
37432	311
37433	311
37445	128
37464	128
37475	130
37476	181
37484	175
37486	159
37510-52	177
37510-53	110MP
37510-54	5072A
37510-161	199
37510-162	123AP
37510-163	123AP
37510-164	1100
37510-166	1052
37510-167	1081A
37549	102A
37550	102A
37551	102A
37552	103A
37563	130
37584	124
37585	123
37599	175
37628	311
37649	128
37663	130
37664	129
37677	102
37680	116
37682	5547
37694	128
37694A	108
37694B	108
37702-1	714
37725	154
37730	124
37740	129
37741	128
37763	175
37764	129
37767	128
37793	129
37800	128
37806	128
37833	100
37833-2	909D
37840	128
37847	128
37884	123AP
37888	130
37894	311
37899	128
37900	175
37913	175
37918	129
37932	278
37966	129
37967	181
37974	181
37975	128
37982	128
37986-3563	107
37986-4040	107
37986-4046	107
37987	116
37992	5529
38045	128
38049	181
38052	5802
38057	102A
38058	128
38063	311
38074	5804
38091	158
38093	126
38094	121MP
38095	159
38112	124
38117	102A
38120	154
38121	154
38122	195A
38137	130
38138	130
38166	130
38174	116
38175	103
38176	102A
38177	102
38178	123
38182	128
38190	311
38199	101
38200	101
38207	108
38208	108
38209	100
38246	108
38246A	108
38265-00000	784
38265-00010	784
38265-00020	784
38265-00030	784
38267	181
38268	181
38269	158
38270	128
38271	128
38272	130
38279	311
38281	278
38283	123AP
38334	128
38354	128
38361	128
38378	220
38385	5806
38388	129
38397	181
38398	128
38424	128
38432	128
38443	175
38448	186
38458	129
38468	128
38473	181

PART NUMBER	NTE REPLACEMENT
38474	130
38475	128
38476	128
38478	199
38491	181
38494	130
38495	128
38496	129
38497	128
38510-51	614
38510-52	109
38510-53	140A
38510-54	177
38510-161	132
38510-162	229
38510-163	123AP
38510-164	199
38510-165	192
38510-166	123AP
38510-167	123AP
38510-168	186A
38510-169	788
38510-170	801
38510-171	1087
38510-330	177
38510-331	5070A
38510-350	199
38511	108
38511A	108
38533	126
38551	128
38563	222
38588	128
38608	5547
38609	5547
38626	130
38654	129
38659	128
38680	160
38681	160
38685	102A
38716	128
38725	128
38731(KALOF)	130
38733	152
38734	129
38735	128
38736	128
38737	129
38785	108
38786	108
38787	161
38788	123AP
38789	195A
38837	128
38869	128
38870	129
38885	5527
38897	130
38916	128
38920	108
38921	108
38927-00000	290
38965	181
38970	5529
38971	311
38976	5527
38986	311
38996	154
39005	5547
39034	123AP
39042	177
39043	311
39053	160
39060-1	747
39075-1	738
39096	123AP
39097	128
39114	129
39119	5527
39123	124
39127	130
39140	181
39148	130
39149	124
39196	181
39209-1	791
39213	130
39231	128
39238	128
39248	128
39250	129
39251	130
39252	128
39255	128
39264	6408
39285	175
39299	5527
39302	152
39311	128
39329	128
39331	108
39369	130
39377	124
39394	397
39414	130
39440	129
39443	128
39455	181
39458	184
39462	128
39465	181
39466	181
39477	124
39485	128
39486	128
39492	130
39510	157
39542	5642
39558	5695
39561	128
39587	128
39616	181
39617	128
39618	129
39619	129
39635	181
39705	128
39713	128
39715	124
39730	108
39731	108
39741	192
39750	152
39750(ORRTRONICS)	184
39751	181
39763	6408
39767	152
39789	108
39789(POWER)	152
39804	5802
39811	5642
39824	152
39830	5547
39835	128
39842	128
39853	129
39855	311
39863	128
39864	128
39865	129
39868	128
39876	192
39893	121
39901-0001	105
39902	5444
39919	192
39920	128
39921	130
39923	194
39940	128
39948	152
39952	5695
39954	130
39967	346
39981	152
40004	160
40005	160
40006	160
40022	104
40024	116
40024VM	116
40034	102A
40034-1	102A
40034-2	102A
40034-3	102A
40034VM	102A
40035	102A
40035-1	102A
40035-2	102A
40035-3	102A
40036	102A
40036-1	102A
40036-2	102A
40036-3	102A
40037	103A
40037-1	103A
40037-2	103A
40037-3	103A
40037VM	103A
40038	102A
40038-1	102A
40038-2	102A
40038-3	102A
40038VM	102A
40050	104
40051	121
40051-2	121
40053	128
40080	128
40081	195A
40081V1	195A
40082	195A
40082A2	195A
40084	123AP
40085BDC	40085B
40085BDM	40085B
40085BFC	40085B
40085BFM	40085B
40085BPC	40085B
40106B	40106B
40106BE	40106B
40108	5870
40108R	5871
40109	5872
40109R	5873
40110	5874
40110R	5874
40111	5876
40111R	5877
40112	5878
40112R	5879
40113	5880
40113R	5881
40114R	5883
40115	5886
40115R	5887
40143	116
40151	130
40160BDC	40160B
40160BDM	40160B
40160BFC	40160B
40160BFM	40160B
40160BPC	40160B
40161	40161B
40161BDC	40161B
40161BDM	40161B
40161BE	40161B
40161BFC	40161B
40161BFM	40161B
40161BPC	40161B
40162BDC	40162B
40162BDM	40162B
40162BFC	40162B
40162BFM	40162B
40162BPC	40162B
40163BDC	40163B
40163BDM	40163B
40163BFC	40163B
40163BFM	40163B
40163BPC	40163B
40174	40174B
40174B	40174B
40174BE	40174B
40192BDC	40192B
40192BDM	40192B
40192BFC	40192B
40192BFM	40192B
40192BPC	40192B
40193BDC	40193B
40193BDM	40193B
40193BFC	40193B
40193BFM	40193B
40193BPC	40193B
40208	5980
40208R	5981
40209	5990
40209R	5983
40210	5986
40210R	5987
40211	5988
40211R	5989
40212	5990
40212R	5991
40213	5992
40213R	5993
40214	5994
40214R	5995
40216	5547
40217	123AP
40218	123AP
40219	123AP
40220	123AP
40221	123AP
40222	123AP
40231	161
40232	123AP
40233	161
40234	161
40235	161
40236	161
40237	161
40238	161
40239	161
40240	161
40242	161
40243	161
40244	161
40245	161
40245-1	161
40245-2	161
40245-3	161
40246	161
40250	175
40250V1	175
40251	130
40253	102A
40254	104
40255	225
40256	191
40259	161
40259(RECT)	5882
40260	161
40261	126
40262	126
40263	126
40263(RCA)	160
40264	124
40264V1	124
40265	116
40266	5801
40267	5802
40268	160
40269	100
40279	186
40280	473
40280R	5995
40281	186
40282	175
40283	123AP
40290	473
40294	108
40295	108
40296	161
40305	186
40306	186
40307	152
40309	128
40309L	224
40309S	224
40309V1	128
40309V2	128
40310	175
40310V1	175
40311	188
40311A	188
40311B	188
40311L	224
40311S	224
40312	175
40312V1	175
40313	124
40314	128
40314L	224
40314S	224
40314V1	188
40314V2	188
40315	128
40315L	224
40315S	224
40315V1	188
40315V2	188
40316	175
40317	128
40317L	192
40317S	192
40317V1	188
40317V2	188
40318	124
40319	129
40319L	193
40319S	193
40319V1	188
40319V2	188
40320	128
40320L	192
40320S	192
40320V1	188
40320V2	188
40321	154
40321L	198
40321V1	396
40321V2	396
40322	124
40323	128
40323L	224
40323S	224
40323V1	188
40323V2	188
40324	175
40325	130
40326	128
40326L	192
40326S	192
40326V2	188
40327	396
40327L	198
40327V2	188
40328	124
40329	102A
40346	396
40346L	198
40346S	315
40346V1	191
40346V2	225
40347	128
40347L	224
40347S	293
40347V1	186
40347V2	225
40348	198
40348V1	196
40348V2	225
40349	127
40349V2	225
40350	128
40351	108
40352	108
40354	154
40355	154
40359	102
40360	128
40360L	224
40360S	224
40360V1	188
40360V2	188
40361	128
40361L	224
40361V2	188
40361V3	188
40362	129
40362V1	189
40362V2	189
40363	130
40364	175
40366	128
40366L	198
40366S	224
40367	128
40368	16007
40369	130
40372	175
40373	175
40374	124
40378	5494
40379	5527
40383	116
40385	396
40385L	198
40385V1	188
40385V2	188
40389	186
40390	191
40391	129
40392	225
40394	294
40395	102A
40396	103
40396/N	103A
40396/P	158
40396N	103A
40396P	102A
40397	123AP
40398	123AP
40399	123AP
40400	123AP
40403	100
40404	123AP
40405	123AP
40406	129
40406L	193
40406S	193
40407	129
40407L	192
40407S	192
40408	190
40408L	224
40408S	224
40409	128
40410	129
40411	181
40412	396
40412L	198
40412V1	198
40412V2	396
40413	108
40414	108
40421	130
40422	124
40423	124
40424	175
40425	124
40426	124
40427	124
40429	56006
40430	5608
40432(TRANS)	123AP
40437V1	188
40437V2	188
40438V1	190
40438V2	190
40439	191
40439V1	191
40439V2	191
40440	127
40444	181
40446	224
40450	192
40451	192
40452	192
40453	192
40454	192
40455	192
40456	192
40456(RCA)	123AP
40457	128
40458	128
40459	154
40461	133
40461-2	128
40462	104
40464	130
40465	130
40466	130
40467A	133
40468	222
40468A	222
40469	108
40470	108
40471	130
40472	108
40473	123AP
40474	123AP
40475	108
40476	123
40477	123AP
40478	108
40479	108
40480	108
40481	108
40482	108
40487	160
40488	126
40489	160
40490	102A
40491	124
40500	123AP
40501	128
40504	5444
40505	5446
40506	5448
40507	5444
40508	5446
40517	123
40518	123
40519	123
40525	5650
40526	5651
40527	5652
40528	5640
40529	5641
40530	5642
40531	5640
40532	5651
40533	5642
40534	5650
40535	5641
40536	5642
40537	129
40537L	129
40537S	129
40538	129
40538L	129
40538S	129
40539	128
40539L	128
40539S	128
40544	225
40546	124
40547	124
40553	230
40554	230
40555	230
40559A	133
40577	123AP
40578	128
40581	195A
40582	224
40583	6408
40594	188
40595	189
40595VX	129
40600	221
40601	221
40603	221
40604	221
40605	186
40608	346
40611	128
40611S	224
40612	121
40613	152
40616	128
40616L	224
40616S	224
40618	152
40621	152
40622	152
40623	121MP
40624	196
40625	128
40626	121
40627	196
40628	128
40629	152
40630	152
40631	152
40632	196
40634	129
40634L	189
40634S	189
40635	128
40635L	224
40635S	224
40636	284
40637	123AP
40637A	293
40640	230
40641	231
40642	515
40643	515
40644	515
40646	396/427
40650	171
40654	5463
40655	5465
40662	5693
40663	5695
40664	175
40665	152
40666	186
40668	5633
40669	5635
40672	5697
40673	222
40684	5640
40685	5641
40686	5642
40687	5643
40689	5697
40690	5697
40691	5651
40692	5652
40696	5640
40697	5641
40698	5642
40702	5693
40703	5695
40704	5697
40707	5693
40708	5695
40710	5697
40713	5673
40714	5675
40716	5675
40719	5673
40720	5675
40721	5633
40722	5635
40738	5514
40739	5515
40741	5491
40742	5492
40743	5494
40744	5496
40750	5514
40751	5515
40752	5516
40753	5502
40754	5504
40755	5673
40756	5529
40758	5517
40759	5518
40763	102A
40766	5650
40769	5651
40770	5643
40771	5641
40777	5673
40778	5675
40781	5673
40782	5675
40785	5673
40786	5675
40789	5683
40790	5697
40793	5693
40794	5695
40796	5677
40798	5677
40801	5677
40808	125
40809	125
40814	128
40815	129
40816	182
40816(RCA)	196
40819	222
40820	222
40821	222
40822	222
40823	222
40828	102A
40836	190
40837	190
40841	221
40842	5636
40850	124
40852	283
40852(VM)	102A
40853	283
40853(VM)	158
40854	163A
40868	5463
40869	5465
40873	182
40874	183
40875	182
40877	182
40878	183
40880	230
40884	362
40885	228A
40886	228A
40887	228A
40888	230
40889	231
40890	515
40891	515
40892	515
40894	316
40895	108
40896	108
40897	316
40899	231
40900	5632
40901	5633
40902	5635
40910	175
40911	175
40915	194
40934-1	130
40953	195A
40964	346
40965	346
40972	278
40973	325
40975	195A
40976	195A
41001-4	116
41008	278
41009	278
41009A	278
41014	5633
41015	5635
41020(RCA)	308
41020-618	125
41021(RCA)	308
41023(RCA)	308
41023-224	125
41023-225	125
41024	278
41051	123AP
41052	129
41053	128
41173	519
41175	199
41176	123AP
41177	159
41178	184
41179	185
41180	909D
41180(BELL&HOWELL)	909D
41256	21256
41256-15	21256
41342	185
41344	184
41440	159
41500	196
41501	197
41502	128
41503	129
41504	152
41506	162
41570	102A
41616	116
41689	108

PART NUMBER	NTE REPLACEMENT
41694	108
42020	109
42020-737	140A
42021	125
42025-850	142A
42065	175
42221	116
42302	126
42304	158
42305	102A
42311	126
42321	176
42322	102A
42323	124
42324	102
42342	175
42396	133
42464	123AP
42942	152
43021-017	123AP
43021-198	128
43022-860	108
43044	161
43045	123AP
43046	121
43054	199
43055	123AP
43060	130
43062	177
43072	5079A
43074	121
43082	128
43088	128
43089	129
43095	130
43104	284
43107	129
43114	130
43115	192
43116	129
43117	128
43118	182
43119	182
43120	182
43122	128
43127	159
43139	123AP
43163	152
43165	128
43168	130
43200	7400
43201	7404
43202	7408
43205	7473
43296	132
43959	109
43992-2	101
44001	125
44002	519
44003	125
44004	125
44005	125
44006	125
44007	125
44208	152
44209	153
44465-3	116
44465-4	116
44465-5	116
44465-6	116
44616-1	102
44699	152
44763	188
44764	189
44765(NPN)	188
44765(PNP)	189
44766	133
44937	116
44938	116
44967-2	102
45122	159
45184	123AP
45191	182
45192	182
45195	183
45299	905
45337-A	199
45337-C	159
45354	128
45381	722
45381(VOFM)	722
45385	747
45390	743
45391	788
45394	740A
45411	6408
45495-2	101
45810-51	116
45810-52	614
45810-53	109
45810-54	140A
45810-161	312
45810-162	199
45810-163	229
45810-164	123AP
45810-165	192
45810-166	199
45810-167	788
45810-168	801
45810-169	1087
45810-170	1155
46140-2	116
46287-4	110MP
46490-2	101
46590-2	103
46591-2	103
46592-2	103
46593-2	103
46631-2	101
46774-1	101
46775-2	101
46776-2	102
46914	5802
47126	116
47126-003	116
47126-1	116
47126-1A	116
47126-2	116
47126-3	116
47126-3A	116
47126-4	116
47126-4A	116
47126-6	116
47126-7	116
47126-8	156
47126-9	116
47126-10	156
47126-12	116
47127-3	116
47394-2	102
47645-2	103
47737-2	102
48004-07	123AP
48004-08	123AP
48009	312
48009(1)	312
48106	169
48287	109
48287-4	110MP
48385-2	103
48751-028	106
48937-2	126
48939-2	126
49058-2	103
49092	128
49138-2	101
49139-2	102
49341	102A
49751-163	131
49939-2	160
50027	287
50028	288
50029	159
50061	123AP
50137-2	128
50200-18	152
50200-8	196
50200-9	152
50200-12	128
50200-24	152
50201-4	153
50202-1	123AP
50202-2	123AP
50202-9	194
50202-12	128
50202-13	123AP
50202-14	123AP
50202-23	123AP
50202-24	128
50203-8	159
50203-12	159
50210-2	9932
50210-7	9094
50210-8	9962
50212-19	177
50212-28	177
50212-30	177
50213-5	519
50280-3	175
50308-0100	152
50409-306420	504
50447-4	121
50477-4	121
50505-01	109
50745-01	116
50745-02	116
50745-03	156
50745-04	156
50745-05	156
50745-06	116
50745-07	116
50745-08	116
50957-03	108
51194	128
51194-01	128
51194-02	128
51194-03	128
51213	123AP
51213-01	123AP
51213-02	123AP
51213-03	123AP
51213-2	123AP
51300	175
51428-01	123AP
51429	199
51429-02	123AP
51429-03	123AP
51429-3	123AP
51441	123AP
51441-01	123AP
51441-02	123AP
51441-03	123AP
51442	123AP
51442-01	123AP
51442-02	123AP
51442-03	123AP
51545	123AP
51547	123AP
51650	121
52000-030	9930
52000-032	9932
52000-033	9933
52000-036	9936
52000-037	9937
52000-044	9944
52000-046	9946
52000-048	9948
52000-049	9949
52000-052	9099
52000-055	9097
52000-057	9157
52000-058	9158
52000-061	9961
52000-062	9962
52000-063	9963
52215-00	130
52329	130
52360	130
53007-2	125
53009-1	614
53016R	177
53088-4	125
53092-1	109
53093-1	113A
53099-1	116
53099-3	116
53200-22	123AP
53200-23	123AP
53200-51	123AP
53200-74	199
53201-01	102A
53201-11	102A
53201-51	224
53203-72	128
53300-31	125
53300-41	116
53301-01	125
53400-01	123AP
53704D	230
54806P1	5547
55001	7400
55002	7402
55003	7404
55004	7405
55005	7410
55006	7410
55007	7420
55008	7430
55009	7442
55010	7450
55011	7474
55012	7476
55017	74H183
55021	7409
55022	7412
55023	7422
55024	7416
55027	7413
55029	7454
55032	7401
55034	7440
55035	7407
55036	7406
55166	109
55170-1	229
55606	123AP
55810-51	109
55810-52	109
55810-53	601
55810-161	161
55810-162	123AP
55810-163	161
55810-164	161
55810-165	123AP
55810-166	175
55810-167	703
55810-168	1045
55810-170	1120
55974-1	910
55975-1	9945
55976-1	9946
55977	9930
55978-1	9944
55979-1	9951
55980	9933
55982-1	9932
55986-1	909
55987-1	9962
56009	7447
56519	9946
56552	9093
56553	9930
56557	9936
56558	9945
56571	9962
57000-5452	108
57000-5503	123
57001-01	128
57009	234
57174	5642
58112-002	177
58215-01	123AP
58810-80	116
58810-81	614
58810-82	177
58810-83	109
58810-85	116
58810-86	140A
58810-160	132
58810-161	107
58810-162	123AP
58810-163	123AP
58810-164	199
58810-165	123AP
58810-166	123AP
58810-167	199
58810-168	123AP
58810-169	186
58810-170	1100
58810-171	1142
58810-172	1087
58840-111	116
58840-112	614
58840-113	177
58840-114	110MP
58840-116	116
58840-117	140A
58840-191	312
58840-192	107
58840-193	123AP
58840-194	123AP
58840-195	123AP
58840-196	123AP
58840-197	123AP
58840-198	123AP
58840-199	123AP
58840-200	186
58840-201	1100
58840-203	1087
59395	109
59395(RCA)	109
59557-48	102A
59557-49	116
59625-1	102A
59625-2	102A
59625-3	102A
59625-4	102A
59625-5	102A
59625-6	102A
59625-7	102A
59625-8	102A
59625-9	102A
59625-10	159
59625-11	102
59625-12	102
59840	177
59840-1	109
59844-1	116
59844-2	125
59844-3	117
59987-1	102A
59988-1	128
59989-1	129
59990-1	121
59991-1	142A
60031	128
60034	5695
60041	130
60045	5642
60046	130
60047	130
60048	316
60059	5642
60076	181
60085	130
60091	128
60106	128
60108	5547
60115	181
60127	130
60130	130
60132	186
60133	152
60142	181
60154	129
60172	192
60175	152
60182	5642
60187	181
60194	128
60201	175
60205	130
60213(1C)	726
60213(IC)	726
60213(TRANS)	130
60215-1	109
60216	152
60219	175
60228	128
60234	181
60237	196
60243	130
60259	5642
60270	5651
60294	278
60304	5528
60308	124
60314	108
60317	5642
60319	5642
60322	5693
60323	5642
60335	128
60337	221
60339	181
60341	5652
60350	181
60360	5635
60380	181
60395	123AP
60407	186
60408	152
60410	5633
60413	186
60415	5635
60416	196
60417	128
60423	128
60424	5675
60428	128
60457	188
60458	189
60465	130
60466	5633
60478	5643
60496	5675
60533	5675
60550	5643
60559	124
60572	5633
60582	5642
60594	5693
60597	128
60615	5643
60632	175
60650	5635
60659	128
60667	5675
60673	5642
60677	128
60678	196
60679	152
60680	128
60682	128
60684	154
60685	124
60697	128
60700	128
60701	129
60703	128
60710	130
60719	152
60719-1	159
60720	128
60741	5642
60761	124
60770	104
60784	124
60793	220
60806	5642
60810	181
60816	5635
60817	5635
60833	5635
60835	152
60837	130
60838	152
60879	5643
60885	181
60886	152
60908	6408
60916	5635
60944	130
60947	129
60966	152
60968	5675
60973	130
60977	196
60978	124
60987	152
60991	181
60994	128
60998	5643
61003-4	158
61008-8	102A
61008-8-1	102A
61008-8-2	102A
61009-1	108
61009-1-1	108
61009-1-2	108
61009-2	108
61009-2-1	108
61009-4	123AP
61009-4-1	123AP
61009-6	108
61009-6-1	108
61009-9	129
61009-9-1	129
61009-9-2	129
61009-9-3	102A
61010-0	108
61010-0-1	108
61010-2-1	126
61010-6	121
61010-6-1	121
61010-7-1	108
61010-7-2	123AP
61011-0	129
61011-0-1	129
61011-2	116
61011-3-2	123AP
61012	130
61012-4-1	101
61012-5-1	160
61013-2-1	123AP
61013-4-1	129
61013-9-1	108
61015-0-1	108
61019	130
61026	311
61035	196
61049	123AP
61086-1	233
61088	5801
61093	5642
61096	5642
61100-4100	5635
61102	152
61102-0	126
61104	5643
61122	5529
61133	108
61134	5643
61157	5642
61158	5642
61173	181
61189	5675
61190	5642
61193	152
61209	128
61218	127
61219	128
61224	5642
61234	130
61239	187
61242	186
61244	129
61249-1	778A
61252	196
61260	5496
61273	311
61274	278
61275	128
61282	311
61285	152
61286	152
61291	5642
61295	5675
61359	128
61366	123AP
61367	130
61369/4367	130
61370/4560	128
61371/4561	129
61376	5635
61384	5695
61408	5529
61418	152
61436	156
61443	1003
61451	181
61452	5635
61456	181
61532	5675
61534	196
61538	128
61558	161
61562	128
61566	722
61596	5675
61612	5697
61613	5697
61636	152
61652	5697
61661	108
61663	108
61664	5642
61666	129
61667	128
61733	128
61755	161
61762	5633
61770	5642
61772	152
61774	129
61807	5802
61819	5547
61828	128
61831	5635
61832	5697
61841	128
61865	153
61866	152
61868	130
61872	5635
61875	152
61917	128
61926	196
61932	5675
61937	129
61957	5529
61958	152
61965	124
61981	152
61997	196
62004	130
62005-1	130
62013	124
62019	128
62032	102A
62075	5529
62119	124
62140	125
62142	175
62143	130
62144	196
62156	152
62177	121
62185	128
62191	5635
62192	128
62193	5697
62203	192
62204	129
62207	5642
62211	5635
62212	5675
62221	184
62222	190
62229	124
62232	5642
62238	5635
62243	396
62274	5642
62277	197
62279	197
62282	5529
62287	181
62334	5675
62342	5635
62382	130
62398	128
62404	128
62446	128
62449	108
62452	128
62457	5642
62478	278
62511	196
62512	197
62540	128
62547	238
62571	152
62584	129
62612	128
62660	175
62665	124
62676	152
62680	5643
62681	152
62689	124
62708	129
62746	5643
62759	197
62763	175
62792	130
62950	186
63234-1	909
63282	159
63718(BOSTON GEAR)	116
63718(BOSTON-GEAR)	116
63719(BOSTON GEAR)	116
63719(BOSTON-GEAR)	116
63722(BOSTON GEAR)	5878
63723(BOSTON GEAR)	5882
63729(BOSTON GEAR)	5527
63730(BOSTON GEAR)	5529
63900-229	128
64071-1	102
64074	189
64075	153
64076	152
64090	230
64197	153
64271	311
65044	316
65747	5466
65804-62	160
65804-63	102A
65813	5410
66007-4	128
66008-2	102A
66009-5	121
66010-3	121
66140	5645
66161(PEAVEY)	94
66600	614
66682-42	116
67001	128
67003	128
67055	177
67085-0	121MP
67085-0-1	121MP
67088	473
67193-82	100
67193-85	102
67544	136A
67586	123AP
67590	109
67599	158
67802	108
68130	130
68155	278
68177	116
68177A	116
68504-62	160
68504-63	102A
68504-76	109
68504-77	109
68504-78	116
68555	284
68595-13	100
68617	123AP
68645-03	116
68895-13	102
68994-1	941
69107-42	126
69107-43	160
69107-44	126
69107-45	102
69111	116
69213-78	116
69901	159
70008-0	130
70008-3	130
70019-1	175
70019-5	175
70023-0-00	123AP
70023-1-00	123AP
70055	177
70064-7	116
70066-3	116
70066-4	116
70087-31	128
70158-9-00	129
70167-8-00	108
70177A03	738
70177A05	749

PART NUMBER	NTE REPLACEMENT
70205-8A	125
70231	108
70260-11	108
70260-12	108
70260-13	108
70260-14	123AP
70260-15	123AP
70260-16	123AP
70260-18	130
70260-19	129
70260-20	123AP
70260-29	129
70270-05	125
70270-23	116
70270-38	125
70372-2	177
70398-1	101
70399-1	326
70399-2	6401
70432-16	116
70434	121
70511	123AP
70581-1	177
71006-28	116
71006-30	116
71119-1	177
71119-2	109
71193-1	102
71193-2	102
71226	199
71226-002	289A
71226-003	289A
71226-004	289A
71226-005	289A
71226-006	289A
71226-015	289A
71226-1	85
71226-2	123AP
71226-3	123AP
71226-4	123AP
71226-5	123AP
71226-6	123AP
71226-10	123AP
71226-15	199
71226-101	199
71226-102	199
71226-103	199
71226-104	199
71226-105	199
71226-106	199
71226-115	199
71226-202	199
71226-203	289A
71226-204	289A
71226-205	289A
71226-206	289A
71226-207	289A
71226-208	289A
71226-209	289A
71226-210	289A
71226-211	289A
71226-212	289A
71226-213	199
71226-214	199
71226-215	199
71266-4	123AP
71411-001	5074A
71411-002	142A
71411-003	5077A
71411-005	5031A
71411-008	5029A
71411-009	5010A
71411-011	5000A
71411-014	5027A
71411-017	5022A
71411-018	5008A
71411-1	141A
71411-2	142A
71411-3	5077A
71411-4	5079A
71411-5	5081A
71412-4	123AP
71412-5	123AP
71447-001	192A
71447-002	192A
71447-003	85
71447-1	192A
71447-2	192A
71447-3	192A
71447-10	179
71447-101	85
71447-201	85
71448	121
71448-1	121
71448-2	121
71448-3	121
71448-4	121
71448-5	121
71448-6	121
71448-7	121
71448-10	121
71449	5802
71449-1	5802
71467-1	177
71488-4	121
71488-5	121
71488-6	121
71588-1	116
71588-2	116
71588-5	116
71588-6	116
71667-1	177
71686-004	133
71686-005	133
71686-006	133
71686-1	133
71686-4	457
71686-5	133
71686-6	132
71686-104	133
71687	159
71687-001	290
71687-1	193
71687-101	159
71687-201	290
71748-001	326
71748-1	326
71778	109
71779	116
71780	5009A
71783	169
71787-1	159
71794	156
71818-001	129
71818-1	159
71819-001	128
71819-1	123AP
71887-001	326
71887-1	326
71887-2	326
71887-101	128
71961-001	128
71961-1	324
71962-001	129
71962-1	129
71963-001	199
71963-1	123AP
71964-001	130MP
71964-1	130
72003	176
72004	176
72006	176
72013	109
72017	113A
72025	116
72026	116
72027	113A
72036	115
72041	116
72053	113A
72054-001	172A
72054-1	172A
72054-101	46
72058	116
72058A	116
72060	109
72079	116
72079-001	116
72079-002	116
72079-003	116
72079-004	116
72080	109
72089	109
72092	185
72093	184
72093-001	184
72097	116
72101	116
72103	116
72104	109
72106	614
72109	116
72110	118
72113	116
72113A	116
72114	123AP
72115	123AP
72116	123AP
72117	102A
72117-001	153
72117-1	153
72117-101	292
72119	116
72123	116
72123A	116
72128	110MP
72128A	109
72129	109
72129A	109
72130	116
72130-1	116
72131-001	6402
72131-002	6402
72131-1	107
72131-102	6402
72135	138A
72135-C	138A
72137	506
72145	116
72145A	116
72146	177
72147	177
72148	113A
72150	102A
72151	123AP
72151(RECT)	156
72152	178MP
72152(TELEDYNE)	177
72158	116
72161-1	506
72162-1	522
72162-2	552
72163-1	178MP
72165-1	5097A
72165-3	5068A
72165-5	5099A
72165-6	5101A
72167-002	5801
72168-2	5081A
72168-3	137A
72171-1	116
72172-1	125
72174-1	166
72176	116
72180	523
72181	74121
72185	7476
72190	158
72191	103A
72192-001	186
72192-1	186
72192-101	152
72193	131
72197	177
72204	123AP
72206	123AP
72207	123AP
72208-001	5638
72233-001	211
72233-1	211
72233-101	153
72259-002	159
72259-003	175
72259-1	85
72351-001	199
72415-001	931
72417-101	5452
72546-001	219
72591-001	130
72784-21	100
72784-22	102A
72784-23	102A
72797-80	126
72797-81	160
72799-41	102A
72813-10	102A
72824-001	4015B
72825-001	4042B
72827-001	4069
72828-001	4071B
72829-001	4081B
72830-001	4082B
72831-001	4516B
72832-001	4555B
72833-001	4001B
72834-001	4002B
72835-001	4011B
72836-001	4023B
72839-001	902
72847-51	102A
72856-63	121
72874-52	123AP
72879-39	126
72879-40	126
72923-08	160
72941-33	102A
72949-10	108
72951-95	108
72951-96	108
72963-14	123AP
72979-80	108
73100-9	102A
74021-1	74H30
74105	74105
74107	74107
74107N	74107
74107PC	74107
74109	74109
74111	74111
74116	74116
74121	74121
74121N	74121
74121PC	74121
74122	74122
74122PC	74122
74123	74123
74123PC	74123
74125N	74125
74126	74126
74128	74128
74132	74132
74132PC	74132
74141	74141
74141DC	74141
74141PC	74141
74145	74145
74145DC	74145
74145PC	74145
74147	74147
74148	74148
74148N	74148
74150	74150
74150DC	74150
74150N	74150
74150PC	74150
74151	74151
74151APC	74151
74151DC	74151
74151PC	74151
74152DC	74152
74152PC	74152
74153	74153
74153DC	74153
74153PC	74153
74154	74154
74154DC	74154
74154N	74154
74154PC	74154
74155	74155
74155DC	74155
74155PC	74155
74156DC	74156
74156PC	74156
74157	74157
74157DC	74157
74157N	74157
74157PC	74157
74160	74160
74161	74161
74162	74162
74163N	74163
74163P	74163
74163PC	74163
74164	74164
74164DC	74164
74164N	74164
74164PC	74164
74165DC	74165
74165PC	74165
74166	74166
74166DC	74166
74166N	74166
74166PC	74166
74170DC	74170
74170PC	74170
74173	74173
74174	74174
74174DC	74174
74174N	74174
74174PC	74174
74175	74175
74175DC	74175
74175PC	74175
74176DC	74176
74176PC	74176
74177	74177
74177DC	74177
74177PC	74177
74178DC	74178
74178PC	74178
74179DC	74179
74179PC	74179
74180	74180
74180DC	74180
74180PC	74180
74181	74181
74181DC	74181
74181PC	74181
74182DC	74182
74182PC	74182
74185	74185
74190DC	74190
74190PC	74190
74191	74191
74191DC	74191
74191PC	74191
74192	74192
74192DC	74192
74192PC	74192
74193	74193
74193DC	74193
74193N	74193
74193PC	74193
74195	74195
74195N	74195
74196	74196
74196DC	74196
74196PC	74196
74197DC	74197
74197PC	74197
74198DC	74198
74198PC	74198
74199DC	74199
74199PC	74199
74200-8	116
74200-9	116
74221	74LS221
74221N	74LS221
74251	74251
74265	74265
74279	74279
74298	74298
74367	74367
74368	74368
74368A	74368
74371C	7437
74390	74390
74651-02	123AP
74662	181
75145-3	128
75188	75188
75188N	75188
75189	75189
75189A	75189
75189AN	75189
75230-9	116
75433APC	75453B
75450APC	75450B
75450BA	75450B
75450N	75450B
75450PC	75450B
75451APC	75451B
75451BPC	75451B
75451BV	75451B
75451CN	75451B
75452	75452B
75452APC	75452B
75452BP	75452B
75452BPC	75452B
75452BV	75452B
75452CN	75452B
75452N	75452B
75453BPC	75453B
75453BV	75453B
75453CN	75453B
75454APC	75454B
75454BPC	75454B
75454CN	75454B
75468	2013
75469	2014
75491APC	75491B
75491B-5N	75491B
75491BPC	75491B
75491N	75491B
75491PC	75491B
75492	75492B
75492APC	75492B
75492BPC	75492B
75492N	75492B
75492PC	75492B
75493	75493
75494N	75494
75561-1	159
75561-2	159
75561-3	123AP
75561-16	123AP
75561-18	234
75561-20	128
75561-21	234
75561-28	123AP
75561-31	159
75561-32	128
75561-33	123AP
75568-3	107
75596-1	234
75596-2	234
75596-3	234
75596-4	234
75613-1	199
75613-2	199
75614-1	123AP
75616-6	108
75617-1	159
75617-2	159
75654-1	316
75700-03-01	121
75700-04	123AP
75700-04-01	123AP
75700-05	123AP
75700-05-01	123AP
75700-05-02	123AP
75700-05-03	123AP
75700-08	123AP
75700-08-02	123AP
75700-09-01	123AP
75700-09-21	123AP
75700-13-01	129
75700-14-02	116
75700-14-05	125
75700-22-01	175
75700-24-02	125
75702-15-21	116
75702-15-24	117
75702-15-34	125
75803-1	153
75803-2	153
75803-3	153
75810-17	108
75960CH	102
76162-2	500A
76236	123AP
76600P	746
76675	109
76675A	109
76675B	109
76797-2	923
77001	230
77027-1	9093
77027-2	9093
77052-3	102A
77052-4	102A
77053-2	102A
77068-3170756	124
77190-7	116
77190-8	125
77271-3	116
77271-4	125
77271-8	160
77272-0	102A
77272-1	102A
77272-5	102A
77272-7	102A
77272-9	102A
77273-2	102A
77273-3	102A
77273-6	102A
77273-7	102A
77489	112
77561-27	159
78001	231
78005AP	960
78010AP	1932
78012AP	966
78021	4051B
78024	987
78106C	988
78120DA	933
78331	159
78399	130
78524-39-01	125
78527-75-01	102A
78527-76-01	102A
78527-78-01	102A
78527-79-01	102A
78894	116
78972	112
79408	139A
79855	108
79856	108
79922	175
79949	148A
79985	109
79992	152
80050	121
80053	704
80070	704
80071	704
80073	704
80074	704
80081	726
80083	704
80090	704
80094	704
80105	104
80131	241
80249-910787	163A
80416C	121
80501	123AP
80540	123AP
80544	123AP
80545	123AP
80710	712
80757	727
80807	130
80813VM	123AP
80814VM	123AP
80815VM	123AP
80816VM	123AP
80817VM	103A
80818VM	102A
80829	789
80902-1	128
80904-1	128
80910-147	1100
81170-6	123AP
81177	731
81336-1	727
81336-2	727
81404-4A	102A
81410-145	199
81500-3	102A
81501-5	102A
81502-0	100
81502-0A	100
81502-0B	100
81502-1	100
81502-1A	100
81502-1B	100
81502-2	102A
81502-2A	102A
81502-2B	102A
81502-3B	102A
81502-4	102A
81502-4A	102A
81502-4B	102A
81502-5	102A
81502-5A	100
81502-5B	100
81502-6	101
81502-6A	101
81502-6B	101
81502-6C	101
81502-6D	101
81502-7	100
81502-7A	100
81502-7B	100
81502-7C	100
81502-8	100
81502-8A	100
81502-8B	100
81502-8C	100
81502-9	102A
81502-9A	102A
81502-9B	102A
81502-9C	102A
81503-0	102A
81503-0A	102A
81503-0B	102A
81503-1	102A
81503-1A	102A
81503-1B	102A
81503-3	102A
81503-3A	102A
81503-4	102A
81503-4A	102A
81503-4B	102A
81503-4C	102A
81503-6	100
81503-6A	100
81503-6B	100
81503-6C	100
81503-7	100
81503-7A	100
81503-7B	100
81503-7C	100
81503-8	100
81503-8B	102A
81503-8C	102A
81504-1	100
81504-1A	100
81504-1B	100
81504-1C	100
81504-3	100
81504-3A	100
81504-3B	100
81504-3C	100
81505-8	102A
81505-8A	102A
81505-8B	102A
81505-8C	102A
81505-8X	102A
81506-4	126
81506-4A	126
81506-4B	126
81506-4C	126
81506-5	100
81506-5A	100
81506-5B	100
81506-5C	100
81506-6	100
81506-6A	100
81506-6B	100
81506-6C	100
81506-7	126
81506-7A	126
81506-7B	126
81506-7C	126
81506-8	126
81506-8A	126
81506-8B	126
81506-8C	126
81506-9	102A
81506-9A	102A
81506-9B	102A
81506-9C	102A
81507-0	102A
81507-0A	102A
81507-0B	102A
81507-0C	102A
81507-0D	102A
81507-4	102A
81507-5	103A
81507-6	103A
81510-3	100
81510-4	102A
81510-5	100
81511-4	102A
81511-5	100
81511-6	100
81511-7	100
81511-8	102A
81512-0	102A
81512-0A	102A
81512-0B	102A
81512-0C	102A
81512-0D	102A
81512-0E	102A
81513-3	123AP
81513-6	102A
81513-7	121
81513-8	116
81513-9	102A
81514-2	116
81515-8	102A
81516-0	102A
81516-0A	102A
81516-0B	102A
81516-0C	102A
81516-0D	102A
81516-0E	102A
81516-0F	102A
81516-0G	102A
81516-0H	102A
81516-0I	102A
81516-0J	102A
82352	123AP
82415-003	933
82583(TRANS)	128
82716	108
82965F	5635
83008	116
83272	159
83741C01	5465
84001	129
84001A	129
84001B	129
84011	4011B
84011U	4011B
84107	74107
84109	74109
84110	74110
84111	74111
84121	74121
84122	74122
84123	74123
84125	74125
84126	74126
84128	74128
84132	74132
84145	74145
84150	74150
84151	74151
84153	74153
84154	74154
84155	74155
84156	74156
84160	74160
84161	74161
84162	74162
84163	74163
84164	74164
84165	74165
84166	74166
84170	74170
84174	74174
84175	74175
84176	74176
84177	74177
84178	74178
84179	74179
84180	74180
84181	74181
84182	74182
84190	74190
84191	74191
84192	74192
84193	74193
84195	74195

PART NUMBER	NTE REPLACEMENT
84196	74196
84197	74197
84198	74198
84199	74199
84324	9962
84380-1	911
85501	159
85549	123AP
86001	109
86257	129
86287	123AP
86452	102
86458	124
86458-00	124
86812	123
86822	123
86832	102
86842	102
86848	100
87532	128
87756	177
87757	123AP
87758	159
87759	159
88060-51	614
88060-52	177
88060-53	110MP
88060-54	5072A
88060-55	177
88060-141	132
88060-142	229
88060-143	123AP
88060-144	199
88060-145	128
88060-146	186
88060-147	1100
88510-51	614
88510-52	177
88510-53	110MP
88510-54	5072A
88510-55	177
88510-171	132
88510-172	107
88510-173	123AP
88510-174	199
88510-175	123AP
88510-176	186
88510-177	1100
88510-178	1142
88641	116
88686	123
88687	123AP
88688	123AP
88700	176
88796-1-1	5529
88801-3-1	175
88803	128
88803-2-1	128
88803-3-1	128
88832	121
88834	128
88862	123AP
89028-2	9945
89028-3	9944
89028-4	9946
89028-4-1-4	9946
89028-6	9933
89999-205	116
90050	121
90152-01	4066B
90203-6	116
90209-172	123AP
90209-182	123AP
90209-246	234
90271	85
90279	85
90326-001	123AP
90330-001	159
90429	123AP
90431	194
90432	159
90448	194
90934-35	199
91001	116
91021	101
91271	128
91272	128
91273	128
91274	130
91371	198
91411	128
91605	123AP
92138-01	941
92303OON	5564
93005	116
93006	116
93007	116
93011	116
93012	116
93018	5072A
93022	116
93022A	116
93023	116
93027	117
93028	116
93030	140A
93091-4	522
93141DC	74141
93141PC	74141
93145DC	74145
93145PC	74145
93150DC	74150
93150PC	74150
93151DC	74151
93151PC	74151
93152DC	74152
93152PC	74152
93153DC	74153
93153PC	74153
93154DC	74154
93154PC	74154
93155DC	74155
93155PC	74155
93156DC	74156
93156PC	74156
93164DC	74164
93164PC	74164
93165DC	74165
93165PC	74165
93166DC	74166
93166PC	74166
93170DC	74170
93170PC	74170
93174DC	74174
93174PC	74174
93175DC	74175
93175PC	74175
93176DC	74176
93176PC	74176
93177DC	74177
93177PC	74177
93178DC	74178
93178PC	74178
93179DC	74179
93179PC	74179
93180DC	74180
93180PC	74180
93190DC	74190
93190PC	74190
93191DC	74191
93191PC	74191
93196DC	74196
93196PC	74196
93197DC	74197
93197PC	74197
93198DC	74198
93198PC	74198
93199DC	74199
93199PC	74199
94000	102A
94001	102A
94002	102A
94003	158
94004	104
94005	158
94006	102A
94007	160
94008	102A
94009	158
94010	179
94013	160
94015	102A
94016	102A
94017	158
94018	158
94019	158
94020	158
94021	158
94022	158
94023	103A
94024	121
94025	121
94026	121
94027	123AP
94028	160
94029	103A
94030	102A
94032	121
94033	160
94034	121
94035	160
94036	160
94037	159
94037(EICO)	102A
94038	126
94038(EICO)	102A
94039	102A
94040	121
94041	128
94042	128
94043	195A
94044	108
94047	123AP
94048	123AP
94049	175
94050	128
94051	128
94051(EICO)	154
94052	129
94062	192
94063	129
94064	129
94065	130
94065A	130
94066	128
94067	129
94068	129
94070	128
94094	175
94094(EICO)	130
94152	7408
94325	9937
94327	9944
94330	910
94331	9933
94333	9932
94835-145-00	128
95000	109
95001	109
95002	109
95003	177
95004	109
95007	109
95008	109
95012	177
95014	109
95015	116
95015(EICO)	177
95016	117
95017	109
95018	109
95101	160
95102	160
95103	160
95107	160
95108	160
95110	160
95111	160
95112	101
95113	101
95114	101
95115	101
95116	126
95117	101
95118	126
95119	126
95120	126
95120A	100
95121	160
95122	126
95123	126
95124	160
95125	108
95126	108
95127	108
95128	108
95129	108
95130	108
95131	108
95132	222
95133	133
95151	160
95170-1	229
95170-2	229
95170-2(DIODE)	109
95170-2(TRANS)	229
95171-1	108
95171-2	123AP
95171-3	289
95171-4	289
95172-2	102A
95173-1	102A
95201	102
95202	103
95203	102
95204	102
95208	102
95209	102
95211	101
95212	102
95213	102
95214	102
95216	123
95216RED	123
95216YEL	123
95217	102
95218	102
95219	102
95220	128
95221	289
95222-1	102
95222-2	103
95223	123AP
95224-1	102A
95224-2	103A
95224-3	102A
95224-4	103A
95225	123
95226-003	193
95226-004	192
95226-1	128
95226-2	123
95226-3	288
95226-4	287
95227	159
95227-1	159
95228	133
95229	106
95231	133
95232	159
95233	128
95235	5400
95239-1	129
95240-1	159
95241-1	294
95241-3	128
95242-1	108
95250	121
95250-1	121
95251	121
95252	124
95252-1	124
95252-2	124
95252-3	124
95252-4	124
95253	121
95255-000	102
95257	104MP
95258-1	188
95258-2	189
95261-1	152
95262-1	184
95262-2	185
95263-1	184
95263-2	185
95285-1	188
95286	743
95287	788
95291	722
95292	722
95294	722
95296	172A
95298	704
95332-1	177
96147-001	5675
96148-001	5675
96457-1	123AP
96458-1	159
96481	128
97202-222	5077A
97680	106
98484-001	181
98496-001	5675
98497-001	5675
99023-3	116
99101	126
99102	126
99103	160
99104	160
99105	160
99106	160
99107	160
99108	160
99109-1	123
99109-2	123
99120	126
99121	126
99195-1	4052B
99195-3	4052B
99201	102A
99201-14	5016A
99201-16	5019A
99201-21	5021A
99201-102	5002A
99201-110	142A
99201-110(RCA)	113A
99201-116	5119A
99201-201	5000A
99201-208	137A
99201-209	5010A
99201-210	136A
99201-211	137A
99201-212	137A
99201-216	140A
99201-217	5020A
99201-219	142A
99201-221	145A
99201-242	5097A
99201-312	5071A
99201-316	140A
99201-319	5022A
99201-325	5081A
99201-331	5039A
99202	102A
99202-22	145A
99202-128	147A
99202-210	136A
99202-216	140A
99202-218	142A
99202-220	143A
99202-221	5075A
99202-222	5077A
99202-223	5078A
99202-226	146A
99202-228	147A
99203	102A
99203-005	116
99203-006	116
99203-3	177
99203-4	116
99203-5	116
99203-5(DIODE)	177
99203-5(PWR RECT)	116
99203-6	116
99203-6(RCA)	116
99203-7	125
99203-8	125
99203-9	116
99203-203	116
99203-206	116
99204	102A
99205	102A
99205-5	116
99206-1	123AP
99206-2	123AP
99207-2	123AP
99210-204	134A
99210-210	136A
99217	102
99218	102
99240-269	199
99240-292	219
99250	121
99250-1	121
99252	124
99252-1	124
99252-2	124
99252-2(METAL)	124
99252-2(PLASTIC)	157
99252-3	124
99252-4	152
100017	109
100017-001	2117
100092	123AP
100093	123AP
100292	199
100412	116
100471	113A
100520	116
100581	113A
100617	116
100624	116
100678	126
100693	102A
100768	5521
100802	123AP
100828-003	177
100844	109
101078	160
101087	160
101089	126
101119	123AP
101154	177
101185	123AP
101403	116
101434	108
101435	128
101436	195A
101497	159
101568	181
101678	101
101973	102A
101974	102A
102001	159
102002	123AP
102005	7490
102009	177
102209	128
102260	159
102263	159
102951	56004
102989	109
103318	116
103443	101
103514	519
103521	123AP
103562	102A
103705	9946
103717	9962
103729	9930
103731	9932
103743	9936
103755	9945
103872	113A
104009	126
104059	126
104080	103A
104081	116
104152	109
104213	116
104273	116
104325	116
104389	123AP
104444	102A
104615	116
104680	3018
104680(ORGAN)	3018
104719	128
104762	519
104830	9930
104833	9933
104836	9936
104844	9944
104846	9946
104862	9962
105064	120
105180	128
105350	3018
105432	123AP
105468	106
105517	109
106379	117
106547	290A
106719	1110
107225	1192
107255	1234
107274	102
107474	113A
107540	116
107625	1234
107628	115
107729	112
109308	113A
109328	113A
109474	113A
109700	6402
110043	116
110075	195A
110240-005	9948
110242-003	9962
110242-004	9962
110263	158
110351	146A
110388	116
110472-003	9944
110494	158
110495	103A
110496	116
110515	104
110610	109
110629	116
110636	116
110667	519
110669	128
110697	123AP
110699	128
110873	116
110957	102A
110958	103A
110959	102A
111001	102
111011	102
111012	102
111013	102
111086	116
111117	160
111118	160
111193-001	311
111207	109
111278	128
111279	195A
111303	123AP
111313	160
111516	116
111605	109
111642	116
111776	116
111820	116
111825	988
111943	108
111945	129
111954	160
111955	160
111956	160
111957	102A
111958	103A
111959	102A
112001	160
112002	160
112011	160
112017	116
112018	116
112032	160
112041	126
112071	102
112296	160
112297	102A
112329	116
112329(AMPHENOL)	177
112330	109
112355	108
112356	123AP
112357	123AP
112358	123AP
112359	123AP
112360	128
112361	128
112362	224
112520	123AP
112521	123AP
112522	123AP
112523	123AP
112524	109
112525	188
112526	109
112527	224
112528	156
112529	109
112529(AMPHENOL)	177
112530	139A
112531	116
112543(BOSE)	332
112544(BOSE)	331
112826	116
113039	116
113182	159
113321	116
113348	123AP
113392	116
113397	118
113398	116
113398(TRANS)	123AP
113438	123AP
113524	123AP
113875	130
113876	181
113938	108
113942	128
113997	118
113998	506
114013	116
114143-1	108
114267	222
114401	5529
114504	176
114504A03	176
114525	108
115039	116
115060-102	519
115063	121MP
115099	614
115101	109
115123	138A
115167	123AP
115225	123AP
115227	160
115228	160
115229	160
115268	121
115269	121
115270-101	106
115275	126
115281	121
115282	121
115283	121
115284	121
115300-1	128
115304	195A
115440	108
115504	160
115517-001	159
115524	125
115527-1	175
115529	125
115559	116
115559A	116
115599	116
115720	123AP
115728	123AP
115783	124
115792	153
115810P2	128
115817	124
115867	507
115875	123AP
115910	108
115925	108
116021	177
116021(SEARS)	177
116048	109
116050	110MP
116051	5804
116052	116
116054	116
116068	127
116072	126
116073	108
116074	123AP
116075	124
116076	123AP
116077	123AP
116078	123AP
116078(RCA)	159
116079	108
116080	108
116081	154
116082	108
116083	108
116084	100
116084(RCA)	129
116085	123AP
116086	127
116087	127
116088	127
116089	127
116090	159
116091	102A
116092	123AP
116093	121
116118	152
116118-2	152
116119	108
116148	123
116198	108
116199	108
116200	108
116201	102A
116202	160
116203	102A
116204	103A
116205	102A
116206	102A
116207	160
116208	160
116209	160
116273	109
116279	124
116284	129
116286	102A
116314	112
116413	6026
116445	708
116588	123AP
116593	116
116623	912
116628	102A
116683	160
116684	160
116685	102A
116686	102A
116687	103A
116756	126
116757	102A
116796P1	704
116875	123AP
116988	158
116996	102A
116997	102A
116998	102A
117145	116
117145A	116
117208	102A
117209	102A
117210	102A
117616	100
117617	100
117618	160
117658	160
117659	109
117724	126
117725	160
117726	160
117727	102A
117728	102A
117729	614
117730	110MP
117760	109
117823	108
117824	126
117866	160
117867	158
118200	123AP
118244	116
118279	124
118284	159
118335	519
118358	138A
118361	704

PART NUMBER	NTE REPLACEMENT
118527-04	177
118686	124
118713	123AP
118822	108
118825	116
118873	116
119013	160
119119(PAIR)	110MP
119199	109
119228-001	159
119232-001	123AP
119258-001	123AP
119264-001	519
119298-001	129
119412	107
119414	108
119507	177
119526	126
119554	108
119555	108
119556	108
119557	108
119594	140A
119596	177
119597	177
119609	704
119635	123AP
119636	123AP
119650	124
119661	614
119662	112
119697	177
119719	174
119721	121
119722	127
119723	127
119724	123AP
119725	123AP
119726	123AP
119727	158
119728	128
119730	159
119822	128
119823	161
119824	161
119825	161
119919	109
119956	177
119982	123AP
119983	129
120068	519
120073	123AP
120074	123AP
120075	102A
120085	123AP
120143	102A
120144	102A
120231	116
120471	125
120481	123AP
120482	123AP
120483	123AP
120503	116
120504	142A
120544	116
120545	102A
120546	102A
120617	109
120909-24.4	102A
121151	102A
121152	102A
121153	100
121154	100
121180	5802
121243	121
121244	127
121467	159
121468	116
121655	123AP
121658	123AP
121659	159
121660	123AP
121661(NPN)	128
121661(PNP)	129
121661(RCA)	123AP
121662	123AP
121663	123AP
121664	123
121680	116
122061	101
122074	123AP
122111	101
122112	101
122129	116
122166	109
122199	704
122243	102A
122244	102A
122517	108
122518	108
122519	123AP
122519(IFAMP)	123AP
122519(SW)	123AP
122520	109
122664	123AP
122665	123AP
122725	126
122788	116
122792	121
122901	102A
122902	107
122904	229
123004	116
123105	177
123110	612
123132	109
123133	519
123139	128
123160	108
123215	124
123243	128
123244	126
123274	123AP
123275	124
123275-14	124
123276	614
123296	116
123375	124
123379	102A
123429	108
123430	108
123431	108
123511	126
123555-01	5547
123555-02	5547
123555-03	5547
123703	128
123726	614
123791	102A
123792	121
123804	116
123804-1	116
123805	102A
123805(DIODE)	177
123806	102A
123807	123AP
123808	131
123809	102A
123813	177
123845	125
123848	116
123852	311
123877	102A
123940	159
123941	123AP
123944	154
123971	159
123991	159
124024	107
124047	159
124097	126
124098	116
124263	108
124412	108
124511	130
124557	123AP
124616	129
124623	107
124624	107
124625	160
124626	102A
124634	106
124753	123AP
124754	233
124755	159
124756	123AP
124757	319P
124759	123AP
124812	116
125105	116
125126	142A
125127	116
125135	123AP
125137	108
125138	108
125139	123AP
125140	123AP
125141	123AP
125142	159
125143	123AP
125144	161
125261	112
125263	108
125264	108
125329	107
125330	126
125389	123AP
125389-14	123AP
125390	123AP
125390(RCA)	107
125392	108
125394	123AP
125397	177
125399	614
125458	116
125458(HV-23)	5804
125471	116
125474	123AP
125475	123AP
125475-14	108
125488	506
125499	5074A
125519	123AP
125528	177
125529	116
125549	116
125588	177
125703	121
125707	106
125721	121
125761	121
125787	166
125790	160
125835	116
125844	506
125848	506
125852	145A
125856	116
125884	177
125944	108
125964	116
125972	160
125992	138A
125993	116
125994	108
125994(RCA)	107
125994-14	108
125995	108
126023	108
126024	108
126025	161
126093	102A
126093-1	102A
126093-2	102A
126093-3	102A
126093-4	102A
126131	116
126138	124
126148	116
126149	614
126150	123AP
126156	123AP
126176	116
126177	109
126184	160
126185	126
126186	160
126187	102A
126188	124
126276	102A
126320	116
126321	177
126331	123AP
126334	123AP
126334(DIODE)	125
126413	166
126524	159
126525	123AP
126526	123AP
126527	506
126582	145A
126604	711
126609	711
126670	108
126697	102A
126698	108
126699	123AP
126700	159
126701	123AP
126702	123AP
126703	128
126704	123AP
126705	154
126706	123AP
126707	159
126708	123AP
126709	154
126710	154
126711	123AP
126712	123AP
126713	123AP
126714	123AP
126715	159
126716	123AP
126717	123AP
126718	159
126719	159
126720	128
126721	128
126722	124
126724	129
126725	128
126726	124
126772	124
126826(DIODE)	506
126826(TRANS)	181
126836(ZENER)	5074A
126849	167
126851	5071A
126852	145A
126853	5103A
126855	116
126856	506
126859	515
126860	118
126861	116
126863	123AP
126863(ZENER)	5097A
126864	147A
126885	125
126898	231
126899	230
126900	162
126945	102A
127017	109
127102	116
127112	102A
127114	102A
127176	116
127177	138A
127214	132
127263	123AP
127297	102A
127303	102A
127354	123AP
127355	123AP
127376	128
127379	125
127382	145A
127393	123AP
127396	116
127397	158
127474	177
127529	123AP
127532	109
127533	614
127589	102A
127590	176
127693	108
127695	116
127712	154
127784	109
127792	108
127793	108
127794	108
127798	152
127828	179
127835	156
127845	128
127899	123AP
127905F02	5995
127933	177
127962	102A
127978	184
127980	222
127992	156
127993	177
128056	152
128057	153
128256	116
128343	126
128474	177
128474(RCA)	113A
128938	126
128940	158
129028	109
129029	116
129029(DIODE)	116
129029(TRANS)	123AP
129049	108
129050	229
129051	128
129095	553
129144	108
129145	123AP
129146	123AP
129147	123AP
129157	109
129158	109
129203	504
129213	116
129241	169
129251	160
129286	158
129289	160
129334	116
129347	160
129348	125
129348(DIODE)	109
129348(TRANS)	102
129359	614
129375	177
129389	160
129392	107
129392-14	108
129393	123AP
129393-14	108
129394	108
129394-14	108
129424	222
129425	123AP
129474	109
129475	177
129494	116
129507	158
129508	158
129509	107
129510	123AP
129511	123AP
129512	123AP
129513	123AP
129556	112
129571	108
129572	123AP
129573	107
129574	108
129604	107
129682-001	519
129697	106
129698	123AP
129699	159
129708-101	519
129759	116
129802	158
129821	904
129897	108
129899	123AP
129903	134A
129904	139A
129904(RCA)	5073A
129938	137A
129940	143A
129946	145A
129949	123AP
129979	108
129980	222
130013	123AP
130013(TRANS)	123AP
130013(TRIAC)	5695
130013PK(TRANS)	123AP
130014	130
130026	500A
130040	172A
130044	140A
130045	177
130046	177
130047	140A
130052	116
130096	148A
130110	125
130122	712
130130	780
130132	5077A
130139	159
130172	128
130174	128
130200-00	102A
130200-02	102A
130215	106
130221	909
130253	234
130278	108
130328	142A
130338-01	116
130380	142A
130389-00	116
130400-95	102A
130400-96	103A
130402-36	102A
130403-04	108
130403-13	123AP
130403-17	123AP
130403-18	123AP
130403-47	103A
130403-52	102A
130403-62	108
130404-21	108
130404-29	129
130404-59	108
130474	188
130535	130
130536	123
130537	123AP
130607	116
130751	712
130761	145A
130762	145A
130793	107
131002-001	5014A
131005	5527
131006	5527
131033-001(ATARI)	519
131050	116
131075	152
131095-2	175
131139	191
131140	191
131148	506
131161	196
131214	112
131221	108
131239	196
131240	123AP
131241	159
131242	159
131242-12	129
131243	123AP
131243-12	123AP
131245	116
131257	181
131262	106
131300	9930
131301	9932
131303	9936
131304	9944
131305	9945
131306	9946
131308	9962
131310	123AP
131311	123AP
131312	9093
131318	506
131320	123AP
131330	123A
131346	230
131347	231
131454	5652
131475	156
131501	116
131501(DIODE)	177
131502	177
131502(RCA)	116
131543	161
131544	161
131545	161
131647	159
131648	108
131710	234
131814	614
131815	156
131815(RCA)	112
131844	108
131848	108
131848(RCA)	152
131849	152
131950	116
131951	116
132148	506
132149	116
132175	128
132176	159
132285	159
132313	730
132325	230
132326	230
132327	128
132328	128
132329	123AP
132416	142A
132418	116
132445	188
132446	188
132447	189
132448	197
132488	189
132492	184
132495	184
132498	159
132499	184
132500	128
132501	506
132509	506
132547	506
132548	506
132549	506
132553	519
132558	213
132571	185
132573	152
132574	197
132616	5071A
132642	85
132643	123AP
132645	177
132650	6410
132697	152
132776	130
132814	116
132815	156
132823	123AP
132824	147A
132830	159
132832	123AP
132842	147A
132865	142A
132912	109
132915	109
132966	503
133171	161
133176	192
133177	128
133178	123AP
133182	159
133218	123AP
133249	123AP
133253	159
133265	171
133266	156
133275	128
133390	177
133390(RECT)	116
133490	159
133543	116
133550	181
133573	186
133576	128
133600	730
133615	506
133616	506
133684	130
133685	130
133690	123AP
133743	123AP
133823	175
133923	181
133925	181
133950	116
134074	112
134142	108
134143	123AP
134144	108
134144-1	107
134155	128
134180	109
134195-001	9930
134196-001	9932
134197-001	9945
134198-001	9946
134254-001	9950
134263	108
134264	112
134279	185
134280	184
134281	180
134282	181
134335	5022A
134342	5642
134417	108
134419	108
134442	108
134444	145A
134450	222
134587	109
134771	196
134772	171
134773	163A
134774	124
134777	505
134857	229
134989	128
134993	136A
135244	503
135281	116
135284	116
135286	159
135297	108
135324	221
135341	506
135347	106
135351	218
135352	162
135362	290
135380	506
135406	5097A
135571	177
135631	532
135691	500A
135716	171
135734	506
135735	196
135739	186
135744	127
135872	177
135930	8125
135963	221
136066	154
136145	787
136146	788
136147	789
136162	177
136163	177
136164	614
136165	108
136168	229
136239	108
136240	229
136281	234
136282	199
136423	129
136424	128
136430	199
136555	725
136605	125
136606	506
136634	143A
136635	116
136648	152
136688	177
136696	128
136721	147A
136766	106
137001	500A
137002-001	74S86
137003-001	74S03
137028	177
137028-001	177
137031	532
137057-001	519
137065	189
137066	188
137075	506
137077(ORGAN)	5814
137093	102A
137108-001	857M
137127	108
137155	129
137159	199
137159-1	199
137160	6402
137241	128
137245	780
137338	229
137339	123AP
137340	159
137341	118
137352	163A
137369	184
137383	161
137388	161
137527	152
137606	552
137607	165
137614	123AP
137646	500A
137647	136A
137648	128
137652	116
137655	5081A
137718	165
137766	395
137780	616
137781	616
137855	503
137875	123AP
137875(IC)	941M
137875(UC)	941M
137876	5641
138001	199
138019	532
138019-001	199
138032(RCA)	310
138033(RCA)	308
138035-001	128
138049-001	234
138049-004	234
138107	149A
138121	189
138172	116
138173	552
138174	146A
138175	177
138191	123AP
138192	152
138193	185
138194	130
138195	130
138196	177
138218	289
138311	7400
138312	7401
138313	7402
138314	7404
138315	7408
138317	7411
138318	7420
138319	7421
138320	74193
138376	159

PART NUMBER	NTE REPLACEMENT
138378	123AP
138379	152
138380	789
138380(IC)	789
138380(TRANS)	152
138381	7432
138403	7473
138421	500A
138429	5404
138681	949
138699	797
138699(RCA)	797
138736	506
138752	500A
138763	128
138789-1	123AP
138789-2	123AP
138789-3	123AP
138789-4	199
138789-5	199
138907	500A
138946	126
138974	5009A
139001	500A
139017	191
139029	519
139044	190
139065	178MP
139069	153
139235	265
139266	188
139267	189
139268	194
139269	194
139270	175
139295	165
139328	177
139362	123AP
139366	340
139455	159
139569	123AP
139605	116
139605(AFC)	178MP
139618	172A
139634	109
139696	128
139706	177
140129	188
140130	189
140259	171
140290	159
140371	159
140372	159
140501	128
140503	506
140506	182
140612	181
140622	123AP
140623	159
140624	194
140625	197
140626	196
140693	116
140694	116
140715	505
140763	230
140764	231
140770	614
140771	108
140772	112
140858-12	123AP
140971	552
140972	552
140973	145A
140976	165
140977	165
140979	196
140995	503
141003	293
141008	123AP
141018	159
141019	123AP
141020	196
141134	984
141135	1174
141187	5077A
141227	159
141254	533
141255	310
141256	308
141279	797
141280	1176
141295	171
141302	147A
141330	123AP
141331	123AP
141332	222
141334	159
141335	128
141343	159
141344	159
141345	159
141355	128
141367	165
141370	108
141370-1	165
141391	221
141402	161
141421	159
141429	142A
141464	500A
141489	125
141558	123AP
141581	142A
141668	5400
141711	159
141734-1	123AP
141738P63-1	159
141767	128
141783	128
141849	116
141872-1	552
141872-6	116
141873	5021A
141967	5087A
141978	5641
142082	6402
142083	123AP
142083-1	85
142083-3	199
142083-83	199
142115	184
142128-1	159
142128-2	159
142176	850
142190	159
142251	188
142251(RCA)	188
142294	754
142348	194
142349	923D
142417	5077A
142569	506
142622(ORGAN)	994M
142670	147A
142671	171
142681	5511
142682	5401
142683	123AP
142684	123AP
142686	123AP
142689	238
142690	190
142691	152
142705	85
142711	123AP
142728	537
142738	5081A
142811	123AP
142838	159
142839	159
142960	190
143041	194
143042	123AP
143162	112
143316	123AP
143594	525
143595	116
143639	159
143690	5134A
143696	851
143753	137A
143766	2024
143777	5080A
143790	5463
143791	159
143792	123AP
143793	123AP
143794	123AP
143795	123AP
143796	123AP
143797	297
143798	128
143802	159
143803	159
143804	123AP
143805	123AP
143806	159
143807	159
143837	177
143847	5081A
143913	533
143963	159
143964	190
144004	116
144011	1123
144012	1263
144015	1266
144017	1268
144018	1269
144026	712
144028	3120
144030	234
144031	290A
144033	185
144034	199
144035	199
144037	107
144039	289A
144040	199
144043	289A
144044	289A
144050	125
144051	125
144052	116
144054	109
144056	5013A
144057	605A
144072-2	966
144076	153
144178	941M
144178(ORGAN)	941
144571	519
144581	519
144582	229
144585	109
144610	199
144691	519
144693	109
144769	172A
144804	5010A
144850	1425
144856	184
144858	234
144859	312
144860	116
144861	5013A
144863	290A
144920	1402
144922	5007A
144923	147A
144927	519
144967	9403
144968	4011B
144969	4016B
144970	4050B
144971	4069
144973	199
144974	519
145113	147A
145134-526	121
145172	189
145173	123AP
145208	537
145258	128
145395	123AP
145398	123AP
145410	159
145513	5401
145586	4013B
145648	238
145660	519
145671	165
145683	614
145686	222
145687	108
145718	533
145766	159
145776	159
145817	5074A
145818	4011B
145833	123AP
145838	289A
145839	116
145840	294
145893	172A
145966	290A
146027	519
146081	153
146136	552
146137	552
146138	615P
146139	152
146141	123AP
146142	159
146143	190
146144-2	123AP
146153-1	123AP
146260	5018A
146261	5132A
146273	136A
146274	140A
146275	5000A
146281	5026A
146286-01	124
146298	5140A
146301	123AP
146302	310
146303	308
146306	5131A
146316	525
146320	135A
146359	159
146364-1	536A
146460-2	789
146466-1	130
146484	123AP
146512	16
146514	1419
146521	222
146522	85
146566	290
146568	290
146569	187
146570	18
146571	519
146572	194
146575	109
146576	519
146595	1414
146596	373
146610	199
146611	109
146612	144A
146613	147A
146631	5022A
146641	9946
146642	9962
146643	9930
146644	9945
146648	238
146823	238
146826	171
146841	5021A
146846	5021A
146847	123AP
146848	229
146849	210
146850	159
146851	287
146854	123AP
146855	152
146856	152
146857	1545
146858	844
146893	1428
146894	1400
146896	712
146898	374
146899	19
146900	19
146901	234
146902	234
146903	16
146904	18
146905	312
146906	125
146907	125
146908	5011A
146911	519
146912	519
146933-503	504
147007-3	116
147015	125
147112-7	129
147115	123AP
147115-5	123AP
147115-6	123AP
147115-7	199
147115-8	199
147115-9	161
147122P7	199
147187-2-14	125
147213	519
147214	109
147215	586
147216	116
147218	519
147219	5016A
147220	5020A
147221	5014A
147232	1660
147234	4011B
147242	16
147243	290A
147245	289A
147245-0-1	108
147246	373
147250	374
147256	9944
147312	293
147350-2-1	704
147351-4-1	127
147351-5-1	121
147352-0-1	124
147353-0-1	161
147355	128
147356-9-1	108
147357-0-1	129
147357-1-1	123AP
147357-2-1	108
147357-4-1	129
147357-7-1	123AP
147357-9-1	108
147359-0-1	129
147360-1	123AP
147363-1	123AP
147389	234
147406	5021A
147437	1469
147438	712
147464	615P
147477-2	5024A
147477-7	146A
147477-7-1	140A
147477-8-2	125
147477-8-3	125
147477-8-7	125
147477-8-8	125
147477-8-10	125
147478	4066B
147478-8-2	117
147499	85
147513	123AP
147546	5022A
147549-1	159
147549-2	159
147555-1	123AP
147579	125
147614	5074A
147617-11	506
147617-12	506
147624-1	197
147655	159
147663	159
147664	123AP
147665	159
147676-1	233
147693	125
147704-6-4	142A
147709	108
147735	5024A
147887	4013B
147892	391
147922-2	112
147923	85
147924	19
147925	262
147926	125(4)
147927	519
147943	616
147974	373
147975	186
147993	125
148061	123AP
148070	451
148085	222
148123	109
148124	590
148146	85
148229	5002A
148235	778A
148236	4049
148237	234
148256	85
148257	5011A
148259	5011T1
148272	519
148295	5018A
148526	238
148529	5014A
148533	107
148588	4013B
148690	5086A
148711	15
148712	125 N1
148714	125 N2
148717	1625
148718	1709
148719	1621
148720	1422
148721	1700
148722	1568
148723	1701
148725	15009
148726	1703
148727	15010
148728	778A
148729	1613
148730	4011B
148731	4012B
148732	4025B
148733	4049
148734	4066B
148735	4078B
148736	4503B
148737	4528B
148740	834
148741	1409
148742	7416
148744	1440
148745	960
148746	391
148747	242
148748	91
148749	21
148750	293
148751	196
148751-147	108
148752	323
148753	107
148754	261
148755	289A
148756	16
148757	152
148758	261
148759	377
148760	85
148761	199
148762	90
148763	116
148764	5012A
148765	5314
148765(12)	5314
148766	5025A
148771	519
148777	611
148778	610
148779	123AP
148780	108
148781	5072A
148782	90
148801	375
148803	605A
148804	5010A
148805	615P
148848	229
148907	123AP
148919	375
148952	9403
148956	962
148957	5014A
148958	5029A
148959	290A
148961	454
148964	238
148968	222
148984	165
148995	159
148996	123AP
148997	123AP
148998	89
148999	152
149007	6410
149017	960
149018	987
149037	846
149038	968
149040	159
149041	159
149042	139A
149251	230
149252	712
149253	868
149254	844
149255	923D
149433	605A
149434	605A
149488	18
149489	85
149540	5022A
149544	229
149546	5351
149585	1703
149587	4001B
149589	4049
149590	4081B
149591	7416
149598	962
149599	21
149609	241
149610	293
149611	391
149613	293
149614	261
149615	519
149616	5025A
149617	125(4)
149676	112
149730	109
149731	116
149751	5143A
149797	5116A
149864	289A
149870	850
149930	5021A
149954	4001B
150045	128
150046A	128
150060	175
150070	181
150095	128
150117	229
150322	18
150330	19
150331	85
150332	85
150342	1427
150344	159
150363	142A
150364	375
150365	615P
150366	159
150369	1566
150371	912
150392-5(ORGAN)	960
150392-12(ORGAN)	967
150418	834
150418(ORGAN)	4015B
150419(CMOS)	4555B
150419(ORGAN)	74LS32
150420(ORGAN)	74LS73
150421(ORGAN)	74LS85
150422(ORGAN)	74LS00
150423(ORAN)	74LS10
150424(ORGAN)	74LS11
150425(ORGAN)	74LS08
150430	1558
150440	74LS138
150513	85
150515	459
150516	16
150517	17
150518	290A
150519	289A
150521	19
150522	290A
150523	290A
150524	19
150527	5018A
150529	519
150530	519
150531	5004A
150533	5010A
150534	5011A
150535	5013A
150536	16
150573	519
150580	941M
150580-2285	941M
150588(ORGAN)	2102
150622	912
150651	552
150671	125
150714-1	199
150730	128
150741	123AP
150742	159
150753	159
150758	159
150762	159
150763	123AP
150764	294
150768	123AP
150771	159
150787	128
150796	128
150834	519
150865	106
151052	139A
151241	177
151263	159
151326	229
151329	189
151332	85
151333	1409
151334	5011A
151335	5021A
151476	506
151544	9932
151548	9099
151552(ORGAN)	4072B
151553(ORGAN)	4075B
151554(ORGAN)	834
151693	108
151974	159
152051	844
152052	139A
152069	612
152184	129P
152213	5014A
152284	519
152286	109
152329	5020A
152362	1425
152364	834
152375	5024A
152407	5024A
152472	5020A
152473K	177
152625	383
152626	382
152627	5018A
152750	5011A
152793	5025A
152835	5014A
152841	112
152869	5037A
152921	928M
152923	4011B
152929	4528B
152935	4069
152970	290A
152971	290A
152972	15
152978	5014A
153107	152
153233	159
153259	16
153260	107
153270	941
153312	184
153325	159
153334	289A
153350	153
153399	123AP
153433	17
153443	17
153445	5007A
153456	834
153489	108
153493	519
153518	5010A
153519	5018A
153534	85
153535	85
153568	928M
153661	19
153672	552
153673	5031A
153676	188
153677	255
153678	89
153679	152
153680	171
153682	5402
153685	844
153712	15004
153826	5021A
153875	868
153882	290A
153937	4011B
154002	5024A
154027	4016B
154222	4001B
154505	5030A
154515	868
154574	1713
154576	1689
154578	112
154579	382
154581	928M
154590	5015A
154648	4503B
154649	4066B
154652	1628
154653	16
154654	253
154655	5011A
154656	5024A
154730	1715
154754	1234
154756	5011A
154765	290A
154766	16
154767	4002B
154768	4012B
154770	4071B
154771	4015B
154772	4024B
154773	4040B
154774	4001B
154782	960
154783	55
154785	56
154807	289A
154822	15004
154832	56
154856	135A
154988	19
155033	289A
155103	923
155115	159
155131	2408
155276	116
155444	91
155495	2409
155508	1711

PART NUMBER	NTE REPLACEMENT
155522	5015A
155523	5025A
155558	5020A
155565	5010A
155566	605A
155568	16
155632	4503B
155677	229
155682	610
155683	616P
155684	519
155711	2079
155712	955M
155732	125
155810	5013A
155822	5022A
155836	5011A
155837	5020A
155838	5004A
155841	55
155842	374
155893	5013A
156023	161
156026	455
156027	519
156029	612
156254	13
156297	5033A
156313	5141A
156317	552
156363	141A
156369	141A
156468	145A
156545	1529
156546	1893
156548	290A
156549	290A
156584	85
156689	5009A
156712	5011T1
156725	1628
156727	519
156730	1658
156733	315
156736	16
156790	5012A
156791	580
156795(TCE)	3099
156800	5023A
156801	5030A
156895	1558
156896	289A
156897	234
156910	116
156911	519 N2
156915	1679
156917	234
156919	290A
156920	5011T1
156931	108
156932	778S
156934	290A
156935	184
156936	5026A
156937	5022A
156938	5018A
156939	5011T1
156944	290A
156945	145A
156947	519
156955	5312
156956	5332
156960	1705
156969	605A
156970	1893
157004	129
157008	123AP
157142	610
157301	177
157306	315
157424	519
157425	85
157427	5073A
157506	912
157529	519
157564	915
157575	309K
157627	54
157637	3020
157644	923
157654	4013B
157669	261
157677	1781
157679	519
157681	912
157694	5312
157800	923D
157800-2760	923D
157808	159
157832	5012A
157833	123AP
157835	5013A
157958	90
157959	2357
157972	2084
157975	2358
158040	981
158066	9093
158075	19
158077	5027A
158153	5020A
158242	16
158313	177
158390	2409
158487	593
158578	615P
158584	156
158837	5463
159064	596
159065	595
159238	5014A
159242	85
159355	977
159362	199
159369	5033A
159426	5024A
159429	5019T1
159429(ZENER)	5019T1
159430	5424
159433	1739
159434	146A
159435	4081B
159945	601
159947	1052
159950	91
159951	85
159960	261
159970	1409
159973	16
159974	615P
160003D0333	159
160082	385
160085	152
160090	5074A
160091	5015A
160092	137A
160175	1558
160196	106
160201	909
160302	315
160547	290A
160557	85
160576	1659
160696	123AP
160741	1659
160832	928M
160844	1934X
160852	5009A
160869	15004
160890	290A
161001	109
161006	109
161015	110MP
161016	109
161021	177
161022	143A
161027	112
161029	116
161030	116
161031	116
161032	506
161033	506
161034	112
161037	116
161038	109
161046	5072A
161066	5084A
161077	123AP
161079	4052B
161080	5022A
161081	5011T1
161120	85
161123	960
161193	1052
161194	90
161195	91
161199	137A
161247	159
161249	5029A
161325	1795
161326	1794
161392	74C240
161558	2408
161588	2408
161705	102A
161714	5010A
161715	15005
161732	4071B
161733	584
161918-28	123AP
161919-29	128
161920	85
161936	18
161995	5069A
162002-040	126
162002-090	108
162002-033	121
162002-039	109
162002-041	126
162002-042	126
162002-062	121
162002-062A	121
162002-071	181
162002-081	128
162002-082	128
162002-085	199
162002-095	121
162002-39	109
162002-40	126
162002-41	126
162002-71	130
162002-101	130
162039	20
162505	293
162735	519
162736	519
162909	5021A
162922	4081B
162929	290A
163060	2359
163198	85
163199	5002A
163348	519
163353	519
163434	987
163794	977
163807	5010A
163823	1735
163893	234
164058	459
164253	2360
164353	2359
164547	134A
164588	519
164589	580
164590	580
164591	135A
164593	5000A
164594	5069A
164595	5020A
164602	956
164717	519
164874	177
164959	290A
164981	9935
164982	9936
164984	4011B
165190D0921	116
165358	142A
165392	107
165572	109
165597	116
165667	126
165668	123AP
165735	128
165736	128
165737	128
165738	175
165739	116
165740	144A
165827	123AP
165828	123AP
165931	107
165932	107
165976	102A
165995	108
166040	116
166272	108
166273	109
166400	158
166593	116
166726	116
166881	116
166882	102A
166883	102A
166906	107
166907	1002
166908	126
166909	126
166917	128
166918	184
166919	185
166920	116
166921	138A
166922	116
166985	143A
166997	158
166999	160
167034	116
167263	123AP
167285	131
167413	116
167540	123AP
167541	123AP
167542	184
167543	116
167544	116
167562	109
167569	128
167572	110MP
167679	102A
167680	158
167688	123AP
167690	159
167691	152
167956	123AP
167957	123AP
167958	175
167998	102A
167999	102A
168339	116
168405	123AP
168567	107
168606	5547
168651	123AP
168652	614
168653	137A
168657	108
168658	108
168659	108
168660	128
168692	116
168706	177
168716	199
168906	158
168907	102A
168910	109
168953	103A
168954	102A
168983	102A
168984	158
169113	116
169114	177
169115	109
169116	116
169117	177
169175	158
169194	107
169195	108
169196	107
169197	123AP
169198	614
169199	136A
169216	124
169359	102A
169360	102A
169361	102A
169362	109
169363	116
169501	109
169505	107
169558	177
169565	116
169570	116
169574	123AP
169590	116
169679	123AP
169680	123AP
169765	116
169771	123AP
169773	102A
170128	159
170132-1(NPN)	103A
170132-1(PNP)	158
170133	116
170294	123AP
170297	116
170307-1	121
170308	123AP
170370	177
170373	109
170376	121
170376-1	121
170388	229
170407-1	121
170479-1	121
170566-1	102
170666-1	121MP
170668-1	121MP
170733-1	178MP
170750	116
170753-1	161
170756-1	161
170783-1(NPN)	103A
170783-1(PNP)	102A
170783-3	103A
170794	229
170827-1(NPN)	155
170827-1(PNP)	131
170850-1	121MP
170856	116
170857	177
170890-1(NPN)	155
170890-1(PNP)	131
170891-1	181
170906	161
170906-1	161
170954	1042
170956	722
170965	116
170967	116
170967(RECT)	116
170967(TRANS)	199
170967-1	123AP
170968-1	123AP
170970-1	116
171003	127
171003(SEARS)	108
171003(TOSHIBA)	123AP
171004	127
171004(SEARS)	121
171005	126
171005(TOSHIBA)	103A
171009	107
171009(SEARS)	108
171009(TOSHIBA)	123AP
171010-1(NPN)	103A
171010-1(PNP)	102A
171015	124
171015(TOSHIBA)	124
171016	160
171016(SEARS)	102A
171017	102A
171018	102A
171019	116
171026	123AP
171026(SEARS)	102A
171026(TOSHIBA)	123AP
171027	123AP
171028	108
171029	107
171029(SEARS)	108
171029(TOSHIBA)	107
171030	161
171030(SEARS)	108
171030(TOSHIBA)	123AP
171031	161
171031(SEARS)	108
171031(TOSHIBA)	107
171032	108
171032-1(NPN)	103A
171032-1(PNP)	102A
171033	108
171033-1	241
171033-1(NPN)	182
171033-1(PNP)	183
171033-2(NPN)	152
171033-2(PNP)	153
171034	108
171038	128
171039	160
171039(SEARS)	160
171039(TOSHIBA)	160
171040	123AP
171040(SEARS)	123AP
171040(TOSHIBA)	123AP
171044	107
171044(SEARS)	128
171044(TOSHIBA)	123AP
171045	108
171046	123AP
171047	162
171047(TOSHIBA)	162
171048	108
171049	102A
171052	108
171053-1	180
171054	108
171090-1	108
171092-1	145A
171139-1	108
171140-1	108
171141-1	108
171144-1	107
171149-016	177
171149-017	177
171149-024	116
171162-004	199
171162-005	123AP
171162-006	123AP
171162-008	123AP
171162-009	123AP
171162-080	102A
171162-090	131MP
171162-025	176
171162-026	192
171162-027	108
171162-039	614
171162-042	109
171162-072	158
171162-073	158
171162-074	102A
171162-075	102A
171162-076	102A
171162-081	158
171162-082	121
171162-083	131
171162-086	121
171162-089	131
171162-095	199
171162-100	199
171162-108	176
171162-113	123AP
171162-118	161
171162-119	123AP
171162-120	102A
171162-121	102A
171162-124	154
171162-125	154
171162-126	154
171162-128	108
171162-129	108
171162-130	108
171162-131	108
171162-132	123AP
171162-143	123AP
171162-161	123AP
171162-162	123AP
171162-163	128
171162-164	210
171162-169	160
171162-172	138A
171162-180	199
171162-186	229
171162-187	229
171162-188	128
171162-190	123AP
171162-191	123AP
171162-193	129
171162-195	211
171162-196	177
171162-197	177
171162-202	123AP
171162-204	199
171162-235	210
171162-247	199
171162-252	116
171162-265	152
171162-269	109
171162-270	110MP
171162-271	177
171162-272	139A
171162-278	229
171162-279	229
171162-280	229
171162-282	614
171162-285	199
171162-286	123AP
171162-287	300
171162-288	199
171162-291	152
171162-292	139A
171162-U90	123AP
171174-1	130MP
171174-2	300MP
171174-3	196
171175-1(NPN)	184
171175-1(PNP)	185
171179-070	1135
171179-027	1045
171179-028	1120
171179-036	1003
171179-045	1087
171179-051	1006
171203	1029
171206-1	108
171206-2	108
171206-4	108
171206-5	108
171206-6	222
171206-7	161
171206-8	229
171206-9	107
171206-10	107
171206-11	107
171206-13	107
171207-1	108
171207-2	108
171207-3	107
171207-4	312
171217-1	131
171217-3	229
171217-4	177
171305	116
171318	107
171319	107
171320	313
171338-1	107
171338-2	107
171338-3	107
171416	116
171522	102A
171553	199
171554	123AP
171555	159
171556	298
171557	297
171558	123AP
171559	123AP
171560	140A
171561	116
171657	116
171676	199
171677	123AP
171678	199
171814	614
171840	177
171841	177
171842	136A
171843	177
171894	614
171915	108
171916	102A
171917	102A
171982	1072
171983	107
171984	614
172165	177
172201	177
172252	1003
172253	177
172254	614
172272	1006
172336	129
172463	152
172547	177
172551	116
172643	152
172721	117
172722	177
172722(AFC)	614
172761	161
172762	294
172763	293
172816	158
174283	5046A
174285	5046A
174576	519
174858	519
175006-181	160
175006-182	160
175006-183	160
175006-184	160
175006-185	160
175006-186	102A
175006-187	108
175006-355	614
175007-275	123AP
175007-276	123AP
175007-277	128
175027-021	123AP
175027-022	104
175043-060	123AP
175043-023	121
175043-058	123AP
175043-059	123AP
175043-062	108
175043-063	108
175043-064	108
175043-065	131
175043-066	109
175043-068	109
175043-069	5072A
175043-081	131MP
175043-81	121
175043-100	108
175043-107	108
175341	5019A
175344	145A
175401	5133A
175424	5029A
175910	2360
176222	868
176223	1800
176226	1576
176296	125
176363	229
176666	5024A
176746	5011A
176853	1797
176925	253
176980	123AP
177092	519
177105	102
177121	615P
177607(TCE)	1860
177788	31
177789	32
177791	2302
177807	5071A
177978	177
178064	2357
178140	74LS08
178526	25
178626	5019A
178627	116
178628	552
178629	552
178630	552
178631	552
178632	5030A
178633	5029A
178634	552
178635	5021A
178636	5047A
178637	552
178638	5020A
178639	5332
178640	142A
178641	5015A
178644	5002A
178645	142A
178646	5010A
178647	107
178648	85
178649	290A
178650	382
178651	293
178653	56
178654	85
178655	290A
178656	376
178660	5457
178690	1140
178692	1676
178693	1751
178695	1658
178697	15042
178737	74S04
178738	7406
178739	7426
178740	74LS08
178741	778A
178742	1835
178743	74LS136
178744	74LS221
178745	960
179603	85
179740	2406
179741	2407
179743	2300
180010-001	912
180020	5085A
180137	2302
180570	519
181003-7	108
181003-8	108
181003-9	108
181012	199
181015	159
181023	123AP
181030	159
181034	159
181038	219
181073	177
181214	123AP
181503-6	108
181503-7	108
181503-9	108
181504-1	108
181504-2	123AP
181504-7	108
181506-7	108
181515-4	128
181515-6	128
181515-7	128
181515-9	128
181526	177
181619	519
181681	177
182304	551
182323(TCE)	1859
182503	74H20
182510	7438
182827	5010A
183014	722
183015	107
183016	107
183017	123AP
183018	107
183019	107
183030	123AP
183031	123AP
183032	159
183033	177
183034	192
183035	193
183044	804

PART NUMBER	NTE REPLACEMENT
183074	290A
183532	941
183896	12
183898	3120
184073	16006
184086	593
184087	596
184106	5010A
184798	519
185022	506
185200	30001
185200(TCE)	3099
185206	552
185233	4066B
185236	123AP
185237	5332
185335	519
185411	177
185436	506
185704	116
185878	555
185881	5313
185882	5019A
185883	5009A
185884	5011A
185885	611
185896	1673
185897	1661
185898	615P
185901	1704
185915	85
185916	107
185917	290A
185918	399
185919	85
185920	379
185921	184
185922	378
185923	85
186342A	128
186404	595
186610	159
186645	123AP
186671	615P
186742	586
186773	966
186801	2362
187217	159
187218	123AP
187659	2357
187660	2358
187749	2355
188056	519
188165	130
188180	159
188226	129
188232	145A
188233	5014A
188234	552
188235	5012A
188236	552
188237	506
188238	125
188240	5038A
188242	1861
188243	1789
188244	1747
188246	1782
188271	377
188272	157
188273	198
188274	89
188400-34	5547
188660-01	941
188964	552
188965	552
188973	5424
189152	1781
190208	5019A
190404	140A
190425	121
190425A	121
190426	123AP
190427	160
190428	123AP
190429	159
190483	2331
190681	5014A
190714	161
190715	123AP
190716	109
190994	2406
191142	2331
191297	960
191299	960
191407	5547
191870	5547
192027	5018A
192285	966
192681	2409
192848	5018A
192909	85
193022	9158
193082	1790
193083	1790
193159	5077A
193207	941
193333	1716
193717	177
193832	2408
194086-3	176
194243	128
194474-8	121
194561	552
194917	116
195478	5025A
195510	2362
195601-6	102A
195606	928M
195617	109
195648-6	116
195703	588
195880	5013T1
196023-1	123AP
196023-2	123AP
196058-4	121
196062	519
196064-3	102A
196121	1248
196122	1792
196148-0	121
196183-5	121
196183-7	102A
196184-3	116
196259-4	116
196333	2360
196501-7	121
196598	2406
196607-9	121
196779-9	128
196779-9-1	128
196780-1	128
197372	519
197374	5014A
197464	519
197935	2355
198003-1	123AP
198003-2	123AP
198005-1	195A
198007-3	123AP
198010-1	126
198013-P1	123AP
198014-1	128
198020-1	128
198020-2	128
198020-3	128
198023-1	123AP
198023-2	128
198023-3	123AP
198023-4	123AP
198023-5	123AP
198024	159
198030	123AP
198030-2	123AP
198030-3	123AP
198030-4	123AP
198030-6	123AP
198030-7	123AP
198031-1	123AP
198031-2	123AP
198034-1	130
198034-2	130
198034-3	130
198034-4	130
198034-5	130
198035-1	128
198035-3	128
198036-1	159
198038-1	175
198038-3	175
198038-4	175
198039-0507	130
198039-1	175
198039-3	175
198039-6	130
198039-7	130
198039-501	175
198039-503	175
198039-506	130
198039-507	130
198042-2	123AP
198042-3	123AP
198045-4	128
198047-1	128
198047-2	128
198047-3	128
198047-5	128
198047-6	128
198048-1	128
198048-2	128
198049-1	175
198050	159
198051-1	123AP
198051-2	123AP
198051-3	123AP
198051-4	123AP
198063-1	153
198064-1	181
198065-1	129
198065-3	129
198067-1	123AP
198072-1	128
198074-1	129
198075-1	198
198077-1	128
198078-1	129
198079-1	181
198079-2	130
198400	909
198409-1	9949
198409-5	9944
198409-6	9932
198409-11	9946
198409-12	9962
198409-13	9930
198409-14	9936
198410-1	909
198581-1	123AP
198581-2	123AP
198581-3	123AP
198763-1	5870
198763-2	5871
198763-3	5872
198763-4	5875
198763-5	5874
198763-6	5875
198763-7	5874
198763-8	5875
198763-9	5876
198763-10	5877
198763-11	5878
198763-12	5879
198763-13	5880
198763-14	5881
198763-15	5882
198763-16	5883
198764-5	5986
198764-6	5987
198764-13	5994
198765-1	5980
198765-2	5981
198765-3	5982
198765-4	5983
198765-5	5986
198765-6	5987
198765-7	5988
198765-8	5989
198765-9	5990
198765-10	5991
198765-11	5992
198765-12	5993
198765-13	5994
198765-14	5995
198766-1	5529
198766-2	5529
198766-3	5529
198766-5	5529
198766-7	5529
198766-8	5529
198773-1	519
198775-1	519
198776-1	519
198779-1	519
198785	519
198785-1	519
198785-2	519
198794-1	101
198799-4	519
198801-1	905
198802	5547
198809-1	177
198810-1	519
198813-1	519
198816	5642
198936-2	5675
199596	177
199807	194
199919	167
199985	116
200028-7-28	102A
200062-5-31	102A
200062-5-32	102A
200062-5-33	102A
200062-5-34	102A
200062-5-36	116
200062-6-32	116
200064-6-103	108
200064-6-104	160
200064-6-105	108
200064-6-106	160
200064-6-107	123AP
200064-6-108	102A
200064-6-109	127
200064-6-110	127
200064-6-111	102A
200064-6-115	116
200064-6-119	116
200064-6-120	116
200067	159
200076	123AP
200137	7010
200200	199
200200-700	199
200220	159
200251-5377	123AP
200252	128
200259-700	218
200420	922M
200433	159
200648-26	109
200781-702	124
201034	124
202000(H KARDON)	140A
202051	123AP
202052	297
202053	172A
202054	199
202055	242
202056	196
202057	182
202315	109
202315(THOMAS)	177
202463	116
202609-0713	123AP
202617	199
202719	172A
202720	199
202862-518	519
202862-947	123AP
202907-047P1	123AP
202909-577	159
202909-587	159
202909-827	130
202911-737	159
202913-057	128
202914-010	9930
202914-010/250-070	9935
202914-010/250-060	9945
202914-010/250-100	9936
202914-020	9946
202914-030	9962
202914-040	9932
202914-050	9944
202914-417	123AP
202915-627	123AP
202917-137	129
202920-150	7491
202922-237	123AP
202925-047	219
203364	159
203718	193
203719	192
203734	377
203735	378
204117	199
204201-001	128
204210-002	123AP
204211-001	130
204969	123AP
205032	159
205048	159
205049	159
205367	159
205702	160
205782-97	123AP
205782-103	123AP
206180	5802
206185	5802
206190	5802
206617	177
207119	124
207417	312
209185-962	121
209417-0714	108
210074	123AP
210076	159
211040-1	181
211083	519
211443LCD	2114
212717	161
213217	199
214105	116
214396	121
215002	160
215008	160
215031	160
215038	160
215053	158
215071	131MP
215072	123AP
215074	123
215075	128
215081	123AP
215089	131
215669	116
216001	109
216003	110MP
216014	116
216020	116
216024	5072A
216445-2	123AP
216449	116
216817	116
216986	121
217119	105
217230	105
217892	121
218012DS	104
218502	102A
218503	102A
218511	128
218537	129
218612	116
219016	101
219245	117
219301	121
219361	121
219440	121
219935	116
219940	121
221128	116
221158	128
221600	123AP
221601	101
221602	121
221605	121
221856	126
221857	123AP
221897	123AP
221918	123AP
221924	101
221940	121
221941	121
222020	1331
222131	123AP
222418	1237
222421	788
222445	788
222449	1217
222455	788
222465	778A
222497	1214
222502	778A
222509	102A
222534	778A
222545	941M
222611	116
222867	125
222915	121
223103	109
223105	177
223110	612
223119	519
223124	102A
223131	109
223133	519
223215	116
223216	116
223323	116
223357	125
223358	116
223365	121
223366	102A
223367	101
223368	101
223369	160
223370	101
223371	102A
223372	100
223462	116
223467	116
223473	100
223474	160
223475	100
223482	103A
223483	102A
223484	102A
223485	102A
223486	102A
223487	126
223489	117
223490	121
223576	121
223684	101
223720	117
223724	116
223753	116
223804	116
223810	102A
223845	125
223848	116
223849	125
223863	5802
223910	5021A
223915	5024A
223943	5009A
224000	5077A
224011	5069A
224060	5024A
224072	5077A
224159	116
224503	121
224506	123AP
224584	100
224586	160
224587	160
224597	116
224696	102A
224774	116
224780	142A
224820	103A
224857	102A
224873	121
225200	116
225265	5994
225267	117
225300	103A
225301	136A
225311	160
225316	136A
225410	109
225592	116
225593	102A
225594	160
225594A	126
225595	121
225596	121
225600	160
225925	121
225927	121
226058	116
226181	100
226182	116
226237	116
226334	109
226338	100
226344	109
226441	101
226517	133
226546	116
226634	121
226788	116
226789	105
226791	103A
226922	125
226924	102A
226999	121
227000	108
227015	117
227348	116
227517	319P
227565	116
227566	121
227675	5882
227676	5994
227720	116
227724	5882
227744	116
227752	100
227801	5882
227804	121
227917	102
228007	140A
228229	121
228230	121
228287	102A
228417	123AP
228558	121
228559	121
228560	125
229017	123AP
229042	5882
229045	105
229088	5994
229133	160
229392	108
229522	116
229805	156
230084	175
230199-1	HVD-1
230199-2	HVD-1
230199-4	HVD-1
230208	121
230209	101
230214	128
230218	116
230225-2	524V15
230233	128
230253	102A
230254	128
230256	101
230259	102A
230523	121
230524	102A
230525	102A
230756	5994
230768	5529
230773	5882
231017	123AP
231140-01	108
231140-04	127
231140-07	108
231140-09	127
231140-11	121
231140-15	123AP
231140-21	102A
231140-23	108
231140-26	127
231140-28	154
231140-31	108
231140-33	121
231140-34	108
231140-36	161
231140-37	161
231140-43	161
231140-44	108
231140-45	103A
231150	116
231339	116
231374	123AP
231375	128
231378	130
231588	102A
231665	116
231669	116
231672	121
231706	102A
231797	121
231923	116
232017	229
232159	375
232194	121
232203	116
232268	175
232359	130
232359A	130
232519	5882
232520	5994
232631	159
232674	121
232675	121
232676	160
232678	123AP
232680	160
232681	126
232840	108
232841	128
232949	101
233011	116
233025	506
233062	506
233117	229
233148	5022A
233150	145A
233221	5011T1
233305	105
233307	105
233507	100
233508	105
233509	121
233561	116
233597	116
233612	580
233735	128
233855	5031A
233944	128
233945	100
233969	129
233991	5003A
234015	160
234024	128
234076	102A
234077	121
234078	105
234178	121
234552	116
234553	125
234565	116
234566	121
234611	116
234612	123AP
234630	102A
234631	160
234758	123AP
234761	116
234763	123AP
235157	5882
235192	123AP
235194	102A
235200	160
235205	123AP
235206	123AP
235299	5994
235312	121
235313	116
235382	125
235541	156
235543	116
235546	116
235997	162
236039	161
236251	108
236265	101
236266	139A
236282	154
236285	123AP
236286	123AP
236287	128
236288	127
236433	129
236631	1682
236706	108
236709	102A
236854	181
236907	108
236935	121
237016	140A
237017	109
237018	109
237020	108
237021	108
237022	116
237023	140A
237024	108
237025	123AP
237026	108
237028	195A
237037	140A
237070	156
237075	191
237223	123AP
237227	116
237421	156
237450	124
237452	121
237453	116
237509	5994
237785	108
237787	145A
237840	108
237929	116
238208-002	175
238368	123AP
238417	102A
238418	102A
239097	156
239103	225
239219	138A
239221	116
239429	125
239517	196
239612	128
239713	181
239917	235
239970	123AP
240003	102A
240006	102A
240055	156
240076	156
240077	5994
240388	124
240401	123AP
240402	129
240403	127
240404	162
240456	116
240564	177
240594	116
240603	116
241052	129
241184	614
241249	108
241295	125
241302	125
241420	5994
241517	159
241657	130
241778	108
241884	159
241945	123A
241960	108
242029	116
242102	152
242141	125
242183	121
242221	102A
242226	116
242422	129

PART NUMBER	NTE REPLACEMENT
242460	129
242590	108
242717	123AP
242718	123AP
242720	123AP
242758	123AP
242759	123AP
242760	159
242838	121
242958	129
242960	108
243115	156
243168	127
243215	105
243318	108
243353	346
243354	186
243364	116
243388	108-1
243528	123AP
243585	123AP
243645	108
243815	105
243837	103A
243843	5642
243922	108-1
243939	102A
244007	100
244057	5021A
244357	124
244817	319P
245057	5400
245078-3	108
245117	5072A
245192	177
245217	139A
245517	109
245568-2	176
245917	306
247109AA	519
247974	451
247994	346
247995	349
247997	351
248017	297
248717	295
248817	177
248917	116
249217	116
249302	364
249508-3	177
249588	126
249635	346
249711	180
250400	103A
251026	5312
251026-01	5313
251819-07	519
251819-16	177
252744	124
252817	116
253704	105
255728	102A
255821HS	193
255903	5994
256068	121
256071	121
256122	5994
256126	100
256127	101
256217	123AP
256317	290
256319	290
256417	199
256480	105
256517	123AP
256617	161
256717	614
256728	5994
256729	5882
256730	5994
256817	229
256917	123AP
257017	199
257242	105
257243	105
257340	102A
257341	121
257385	101
257403	121
257470	100
257473	102A
257534	105
257536	121
257540	108
258017	222
258882	116
258884	5994
258990	121
258993	101
259315	116
259368	116
259878	116
260429	116
260468	101
260565	108
261401	105
261463	116
261488	105
261586	160
261596	116
261898	116
261970	121
261975	116
262066	123AP
262111	140A
262112	116
262113	102A
262114	121
262116	175
262309	105
262310	5994
262370	121
262417	128
262417-1	128
262546	140A
262638	129
262648	5882
262872	116
263424	140A
263561	124
263807	5882
263856	121
263857	124
265074	108
265115	5994
265164	116
265217	601
265235	116
265236	117
265240	123AP
265241	108
265634	116
265771	160
266583	117
266685	123AP
266686	102A
266702	100
267272	146A
267611	177
267704	128
267791	130
267797	108
267838	159
267878	181
267898	123AP
267899	123AP
268003	199
268044L	123AP
268717	129
269367	103A
269374	102A
269922-001	177
270642	125
270744	121
270745	121
270746	121
270779	5882
270780	121
270781	101
270785	121
270786	5529
270819	123AP
275131	123AP
275612	121
275831	125
275845	127
276097	116
276160	128
276331	123AP
276413	128
276415	128
279317	103A
279417	123AP
279517	152
279617	295
279717	235
279817	253
279917	123AP
280017	519
280117	601
280217	125
280317	139A
280417	612
281001-53	199
281001-83	199
281101-97	177
281917	138A
282317	123AP
282601	116
290458LGD	123AP
291275	15033
291277	15032
291509	181
293118	74165
297065C03	160
297074C11	129
297240-1	102A
299371-1	123AP
300008	102
300113	123AP
300233	116
300312	5994
300315	116
300486	101
300524	116
300532	5882
300536	101
300538	102A
300540	102A
300541	102A
300542	101
300550	116
300732	140A
300733	5994
300735	5882
300774	101
301586	116
301591	123AP
301606	128
301915-1	941
302342	123AP
302540	137A
302865	129
304281-P1	177
304581B	123AP
304900	108
308449	123AP
309004	754
309412	121
309418	123AP
309419	129
309421	102A
309441	152
309442	123AP
309449	130
309459	152
309481	519
309504	5642
309683	234
309684	159
309685	234
309689	196
309690	197
310001	923D
310017	102A
310030	160
310035	102A
310110	128
310132	160
310157	126
310158	126
310159	102A
310160	102A
310162	160
310201	102A
310204	160
310221	126
310223	100
310224	126
310225	102A
310254	7408
313309-1	123AP
315930	128
315932	128
317208	142A
318835	130
319304	129
320007	109
320280	159
320529	123AP
321006P1	703
321145	128
321165	159
321166	128
321264-2	195A
321517	123AP
321573	123AP
322968-17	102A
322968-140	121
322968-141	127
322968-167	102A
323934	199
324144	159
325077	129
325079	123AP
325099	124
325101	128
325505-01	5005A
325505-02	5006A
325506-01	5010A
326309-10A	519
326809	909
326823	923
326830	9930
326832	9932
326833	9933
326836	9936
326844	9944
326845	9945
326846	9946
326852	9099
326853	9093
326862	9962
328785	123
329091-7	526A
329814	9945
330003	116
330018	116
330019	116
330803	123AP
331378	9932
331383	128
332762	219
333060-1029	159
333241	123AP
334724-1	123AP
335288-4	123AP
335613	129
335774	123AP
337342	159
338307	519
339002	74H00
339003	74H10
339009	74H40
339300	7400
339300-2	7400
339486	7486
340085PC	40085B
340097PC	40097B
340098PC	40098B
340160PC	40160B
340161PC	40161B
340162PC	40162B
340163PC	40163B
340174PC	40174B
340175PC	40175B
340192DC	40192B
340192PC	40192B
340193PC	40193B
340194PC	40194B
340195PC	40195B
340866-2	128
341181	123AP
346015-15	108
346015-16	108
346015-17	108
346015-18	108
346015-19	108
346015-20	108
346015-21	108
346015-22	108
346015-23	128
346015-24	123AP
346015-25	108
346015-30	128
346015-37	108
346016-1	102A
346016-11	102A
346016-14	123AP
346016-16	128
346016-17	128
346016-18	123AP
346016-19	123AP
346016-25	123AP
346016-26	123AP
346016-27	128
346016-63	191
346607-4	160
348048-2	116
348053-3	116
348054-1	116
348054-2	116
348054-5	116
348054-6	117
348054-7	125
348054-9	116
348054-10	116
348054-11	117
348054-14	117
348054-15	125
348055-2	116
348055-3	116
348057-8	125
348057-9	125
348057-17	136A
348058-2	125
348846-1	128
350109	311
352580	379
361317-1	110MP
369691	324
373003	102A
373117	102A
373119	102A
373401-1	7400
373404-1	7404
373405-1	7410
373406-1	7420
373407-1	7430
373408-1	7440
373409-1	7474
373410-1	7486
373411-1	7470
373412-1	7483
373413-1	74165
373414-1	7476
373423-1	7409
373424-1	7472
373427-1	7490
373428-1	7496
373429-1	7406
373708-1	74179
373712-1	7492
373713-1	7475
373714-1	7453
373714-2	7454
373715-1	7451
373716-1	7482
373718-1	7493A
373721-1	7407
374109-1	7408
374110-1	7460
379005N	519
379101K	123AP
379102	123
386726-1	129
388060	123AP
395253-1	130
400108	128
400127	175
400909	128
400931	9935
401003-0010	159
401003-001	159
401003-001 0	159
401113-1	9946
401113-2	9930
401113-3	9932
401113-4	9945
401113-5	9962
401182	9951
401646	912
405101-1	194
405192	106
405457	123AP
405919-35AD	5882
405919-45AD	5882
405965-8A	128
405965-30A	179
405965-35A	129
410221(RCA)	308
417214	162
421025	315
422901	367
423924	367
423925	366
424863	177
425411-01	128
427735	159
428704	159
430412	352
431705	5010A
433836	123AP
434145	352
434416	367
436119-002	159
437005	366
437006	368
437011	477
437470	519
437476	152
438626	367
442077	5024A
442079	5022A
442085	5010A
443070	294
445023-P1	130
445111	910
450826-1	128
452077	133
454549	100
454760	160
455947	4066B
462580-1	519
463984-1	7440
464010	116
464070	116
465002-30	799
475018	5802
476171-18	506
476690-2	177
481304-1558	2303
481335	128
485752-090	112
485884	5011A
489023A61	186A
489043A06	290A
489751-001	109
489751-020	112
489751-030	123AP
489751-040	123AP
489751-025	123AP
489751-026	123AP
489751-027	108
489751-028	159
489751-029	123AP
489751-031	159
489751-032	153
489751-033	152
489751-037	128
489751-038	128
489751-039	161
489751-041	123AP
489751-042	159
489751-043	124
489751-044	152
489751-045	102A
489751-047	161
489751-048	107
489751-049	107
489751-052	107
489751-058	107
489751-097	159
489751-107	123AP
489751-108	102A
489751-109	102A
489751-113	102A
489751-114	102A
489751-115	127
489751-119	130
489751-120	107
489751-121	161
489751-122	123AP
489751-123	123AP
489751-124	159
489751-125	123AP
489751-127	161
489751-128	161
489751-129	128
489751-130	159
489751-131	108
489751-137	108
489751-143	108
489751-144	128
489751-145	108
489751-146	159
489751-147	108
489751-148	108
489751-162	108
489751-163	131
489751-164	123AP
489751-165	108
489751-166	123AP
489751-167	108
489751-168	108
489751-169	108
489751-171	108
489751-172	123AP
489751-173	107
489751-174	175
489751-175	1046
489751-206	108
489751-208	132
489752-001	109
489752-003	109
489752-004	178MP
489752-005	116
489752-020	112
489752-040	140A
489752-050	116
489752-090	112
489752-08	109
489752-013	116
489752-014	116
489752-015	116
489752-016	506
489752-022	116
489752-025	116
489752-026	506
489752-027	116
489752-028	116
489752-029	156
489752-031	109
489752-035	116
489752-036	110MP
489752-037	116
489752-038	166
489752-041	145A
489752-042	109
489752-043	116
489752-044	113A
489752-045	142A
489752-049	109
489752-051	116
489752-052	112
489752-054	503
489752-066	116
489752-072	120
489752-073	116
489752-074	113A
489752-075	116
489752-076	109
489752-088	614
489752-089	112
489752-091	5074A
489752-092	116
489752-094	116
489752-095	161
489752-096	506
489752-097	116
489752-108	116
489752-109	140A
489752-123	116
489752-124	135A
489752-125	110MP
489752-127	614
489752-169	614
489765-005	113A
489850-004	109
497442	519
497616	519
497616-1	519
497616-2	519
500001	109
500001G	109
500003	125
500009G	109
500052	123AP
500061	123AP
500062	123AP
500073	108
500859	116
500879	128
501002	109
501005	109
501006	109
501010	116
501021S	177
501023S	177
501024S	519
501101	177
501105	519
501152	116
501201	116
501202	116
501343	177
501503	5069A
501505	5015A
502044S	5024A
502048S	5013A
502049S	5022A
502050S	5024A
502057S	5031A
502058S	5021A
502059S	5030A
502063S	5022A
502067S	5036A
502069S	5029A
502070S	5080A
502349	130
503146-1	178MP
503181-1002	177
504162	8070
504170	8076
504183	8081
504199	8090
504207	8096
504214	8098
504220	8103
504235	8115
504246	8118
504264	8125
504291	8139
504313	8149
504339	8167
504345	8167
504367	8181
504419	8213
504442	8226
504468	8242
504720	177
504720-1	519
504833	156
505016S	605A
505198	130
505256	175
505257	175
505287	128
505342	909
505434	175
505469	175
505568	181
506565	196
506566	152
506567	292
506902	199
506911	5802
507660	153
507660-1	291
507661	391
507661-1	391
507661-2	391
507663	153
507663-1	153
507664	390
507664-1	390
507664-2	390
508511	941
508590	7404
508762	123AP
508890	199
509343	5635
509464-1	184
510007	102A
510045S	383
510046S	383
510101S	383
510109S	290A
510110S	91
510584	199
511017S	289A
511019S	382
511020S	382
511021S	382
511022S	382
511103S	93
511104S	374
511110S	292
511534S	110MP
511806	128
512058S	5021A
512101S	289A
512107S	85
512112S	399
512113S	85
512114S	85
512115S	90
513036S	196
513056S	152
513103S	92
513104S	373
513106S	152
513111S	291
513112S	373
514023	123AP
514045	107
514067S	129
514068S	193
514072S	129
514074S	290A
515015S	85
515039S	128
515041S	107
515043S	123AP
515045S	123AP
515070S	107
515077S	85
515082S	85
516009S	132
516024S	451
516026S	312
517999	909
518038S	788
518039S	1237
518044S	1214
518048S	1060
518072S	4069
524966	176
529657	177
529658	519
530015-2	109
530043-1	113A
530051-2	116
530057-1	116
530063-1	109
530063-2	109
530063-4	109
530063-6	116
530063-7	116
530063-10	109
530063-11	116
530063-12	116
530063-13	177
530063-14	110MP
530065-1	109
530065-2	109
530065-3	109

PART NUMBER	NTE REPLACEMENT
530065-1002	109
530065-1002A	109
530065-1003	109
530071-1	116
530071-2	116
530071-3	116
530072-1	116
530072-2	116
530072-4	116
530072-5	116
530072-6	519
530072-7	109
530072-8	177
530072-9	116
530072-10	116
530072-11	116
530072-14	116
530072-15	116
530072-18	177
530072-1001	110MP
530072-1002	177
530072-1006	519
530072-1008	177
530072-1009	177
530072-1010	177
530072-1011	177
530072-1014	156
530072-1015	177
530072-1017	116
530072-1018	519
530072-1019	116
530073-0030	5133A
530073-2	5030A
530073-3	140A
530073-5	137A
530073-6	142A
530073-8	125
530073-9	145A
530073-12	145A
530073-13	142A
530073-14	142A
530073-15	5075A
530073-16	5105A
530073-17	145A
530073-18	146A
530073-20	5085A
530073-21	5079A
530073-22	5077A
530073-23	144A
530073-24	5081A
530073-26	5075A
530073-28	5079A
530073-30	5077A
530073-31	136A
530073-32	5127A
530073-40	135A
530073-1013	142A
530073-1015	5075A
530073-1016	5105A
530073-1017	145A
530073-1020	151A
530073-1021	5135A
530073-1023	144A
530073-1024	5081A
530073-1025	5099A
530073-1028	5079A
530073-1029	5137A
530073-1030	5133A
530073-1031	137A
530073-1034	5071A
530073-1044	5011A
530082-1	116
530082-2	125
530082-3	177
530082-4	156
530082-1002	125
530082-1003	116
530082-1004	116
530084-4	116
530085-2	109
530086-1	116
530087-2	120
530088-1	125
530088-2	125
530088-3	156
530088-4	116
530088-1002	166
530088-1003	116
530088-1004	116
530091-1	156
530092-1	109
530092-2	109
530092-1001	109
530092-1002	177
530093-1	178MP
530093-1001	116
530094-1	116
530095-1	116
530096	118
530096(-1)	118
530096-2	120
530097-2	120
530097-3	506
530098-1	116
530098-1001	116
530099-1	116
530099-3	116
530099-4	116
530099-5	113A
530099-6	116
530104-1	614
530104-2	614
530104-2(8)	614
530104-1001	614
530105-1	109
530105-1001	110MP
530106-001	552
530106-1	507
530106-1001	507
530109-1	116
530111-1	116
530111-1001	116
530111-1002	125
530113-1	172A
530113-2	125
530113-1001	506
530115-1001	109
530116-1	503
530116-3	177
530116-1001	177
530116-1003	116
530118-2	142A
530119-1	503
530119-5	503
530119-7	505
530119-8	504
530119-9	505
530120-1	166
530122-1	116
530122-2	506
530123-1	109
530123-3	506
530123-4	506
530123-5	506
530123-7	506
530124-1	116
530124-2	505
530124-3	116
530126-1	116
530127-1	109
530127-4	116
530127-5	113A
530127-6	116
530129-1	134A
530130-1	199
530132	118
530132-1	118
530135-1	125
530135-2	519
530135-3	116
530135-1003	116
530136-T	506
530140-1	614
530140-1(8)	614
530142-8	614
530144	506
530144-1	177
530144-3	177
530144-1001	519
530144-1002	177
530144-1003	177
530144-1004	519
530145-100	140A
530145-120	142A
530145-130	5022A
530145-339	134A
530145-569	136A
530145-689	5071A
530145-1100	140A
530145-1470	5088A
530145-1569	136A
530146-1	178MP
530146-2	178MP
530148-3	506
530148-4	506
530148-1003	506
530148-1004	506
530149-9	505
530150-1	177
530151-1	116
530151-1001	552
530151-1003	552
530152-1	166
530153-1	500A
530154-1	177
530157-130	143A
530157-569	136A
530157-689	137A
530157-870	5094A
530157-1100	140A
530157-1120	142A
530157-1220	5030A
530157-1569	136A
530157-1919	5018A
530157-1950	5096A
530162-1	116
530162-1001	116
530163-120	142A
530165	535
530165-1	500A
530165-2	522
530165-3	500A
530165-4	522
530165-5	534
530165-6	529
530165-7	500A
530165-8	534
530165-10	534
530165-11	529
530165-12	539
530165-13	529
530165-14	535
530165-15	534
530165-16	534
530165-17	529
530165-18	535
530165-19	557
530165-20	557
530165-21	539
530166-1004	137A
530166-1005	5097A
530166-1006	5136A
530166-1007	5097A
530166-1013	5097A
530170-1	177
530171-1	116
530171-3	116
530171-1001	177
530171-1002	116
530171-1003	116
530171-1569	5011A
530179-1	177
530179-2	177
530179-3	177
530179-1001	177
530179-1002	177
530179-1003	116
530180-1001	116
530181-1	177
530181-1-1	177
530181-1001	177
530181-1002	519
530181-1003	519
530181-9001	177
530181-9003	177
530184-2	506
530184-1001	506
530184-1002	506
530185-1	116(4)
530191-5	549
530192-120	142A
530192-1120	142A
530192-1180	5077A
530192-1200	5079A
530218-1	552
530220-1	519
530221-1	558
530222-1	5842
530224-3	5860
530225-120	5021A
530225-180	5077A
530225-240	5081A
530226-1	116
530226-2	506
530226-1002	506
530257-1	5031A
530972-14	506
531298-001	106
531841-002	199
531972	128
532003	175
532775	199
533013	177
533034	116
533038	116
533802	123AP
534001H	177
535151-1001	116
537200	102A
537428	160
537790	102
539148-1004	506
539157-569	5011A
540204	161
540205	154
540405	5010A
543995	159
547684	106
551015	102A
551026	116
551034	5804
551051	102A
552005	125
552006	116
552007	506
552010	116
552308	123AP
552503	159
555606	123AP
558875	7400
558876	7402
558877	7410
558878	7420
558879	7430
558880	7440
558881	7473
558882	7474
558883	7490
558885	7493A
559507	7401
559509	7450
559510	7460
559557	180
559613	7453
560004	121MP
560020S	156
560028S	116(2)
560029S	116(2)
560046S	116
560058S	5313
560059S	156
560061S	5304
562654	519
564671	129
567312	123
568101	109
570000-5452	123AP
570000-5503	123AP
570004-503	123AP
570005-452	123AP
570005-503	123AP
570009-01-504	123AP
570029	130
570030	185
570031	184
572001	185
572683	123AP
573001	102A
573003	102A
573005	102A
573011	102A
573012	102A
573018	102A
573022	102A
573024	109
573029	102A
573034	109
573036	102A
573037	103A
573101	108
573103	102A
573110	102A
573114	102A
573117	102A
573118	102
573119	102A
573125	102A
573142	102A
573152	102A
573153	102A
573166	121
573184	102A
573199	127
573200	102A
573212	127
573303	126
573328	102A
573329	126
573330	126
573335	160
573336	160
573356	100
573366	126
573371	160
573398	160
573402	126
573405	160
573406	160
573422	102A
573428	126
573432	102A
573467	123AP
573468	123AP
573469	123AP
573471	126
573472	108
573474	108
573475	123AP
573479	123AP
573480	123AP
573481	123AP
573494	108
573495	108
573501	154
573515	124
573518	126
573529	102A
573532	128
574003	102A
575001	109
575002	109
575005	109
575009	109
575019	109
575024	614
575028	116
575037	112
575042	116
575047	506
575048	174
575049	506
575050	116
575051	116
575091	109
575995	120
576001	102A
576005	102A
576054	177
576063	109
580029	116
581005	102
581024	101
581034A	123AP
581042	102
581054	123AP
581055	123AP
581070	130
581078	5641
581078-1	5641
586343-1	325
586344-1	278
587012	726
595819-1	704
595819-2	726
600008-001	5019A
600080-413-001	123AP
600080-413-002	123AP
600096-413	123
600098-413-001	123AP
600115-413-001	130
601030	109
601032	160
601040	160
601052	160
601054	126
601054(SHARP)	105
601065	103A
601113	108
601122	123AP
602032	121
602040	158
602051	158
602075	160
602081	139A
602113	108
602113(SHARP)	123AP
602122	128
602909-2A	123AP
602909-3A	129
602909-7A	128
603020	160
603030	160
603031	121
603040	160
603112	160
603113	108
603114	116
603122	123AP
603312	160
604030	160
604040	160
604080	160
604112	126
604113	108
604122	123AP
604407	177
605030	102A
605112	160
605113	128
605122	131
605131	118
606020	158
606112	102A
606113	116
606131	116
607030	101
607101	113A
607122	124
608030	116
608101	116
608112	127
608112(SHARP)	179
608113	116
608122	128
609020	160
609030	116
609112	123AP
609113	116
610002-011	74LS11
610002-014	74LS14
610002-026	74LS26
610002-038	7438
610002-074	74LS74A
610002-086	74LS86
610002-123	74LS123
610010-413	2013
610020	116
610020-917	995
610024-1	106
610030	109
610030-2	100
610030-3	100
610030-4	100
610030-5	100
610030-6	100
610030-7	100
610030-8	100
610030-9	100
610031-1	199
610031-2	199
610031-3	199
610031-4	199
610032-1	121
610033-1	121
610035	102A
610035-1	100
610035-2	102A
610036	102A
610036-1	102A
610036-2	100
610036-3	100
610036-4	102
610036-5	102A
610036-6	102A
610036-7	102
610036-8	102A
610038-1	121
610039	121
610039-1	121
610040	102A
610040-1	102A
610040-2	102A
610041	108
610041-1	108
610041-2	161
610041-3	108
610042	161
610042-1	108
610043	102A
610043-1	102A
610043-2	102A
610043-3	102A
610043-4	102A
610043-6	102A
610043-7	102A
610045	108
610045-1	108
610045-2	108
610045-3	123AP
610045-4	123AP
610045-5	123AP
610046-1	100
610046-7	108
610049-1	121
610050	160
610050-1	160
610050-2	160
610050-3	160
610051	160
610051-1	160
610051-2	160
610051-4	160
610052	126
610052-1	102A
610053	160
610053-1	160
610053-2	160
610055	160
610055-1	160
610055-2	160
610055-3	160
610056	126
610056-1	160
610056-2	160
610056-3	160
610056-4	160
610056-456P4	109
610057-1	100
610059-1	100
610059-2	100
610061-1	160
610063-1	163A
610064-1	162
610067	121
610067-1	121
610067-2	121
610067-3	121MP
610067-D	121
610068	121
610068-1	121MP
610069	108
610069-1	108
610070	123AP
610070-1	123AP
610070-2	123AP
610070-3	123AP
610070-4	123AP
610071	124
610071-1	124
610071-2	124
610072	108
610072-1	108
610072-2	108
610073	108
610073-1	161
610073-13	142A
610074	126
610074-1	159
610074-2	100
610075-1	154
610076	123AP
610076-1	123AP
610076-2	123AP
610077	123AP
610077-1	123AP
610077-2	123AP
610077-3	123AP
610077-4	123AP
610077-5	123AP
610077-6	123AP
610078	123AP
610078-1	123AP
610078-2	123AP
610079	102A
610079-1	102A
610079-2	199
610080	102A
610080-1	102A
610083	159
610083-1	234
610083-2	234
610083-3	159
610083-4	234
610083-6	159
610083-9001	159
610088	102A
610088-1	102A
610088-2	102A
610091	108
610091-1	108
610091-2	108
610092	108
610092-1	108
610092-2	108
610093-1	159
610094	123AP
610094-1	123AP
610094-2	123AP
610094-3	199
610096	108
610096-1	108
610099	129
610099-1	129
610099-2	129
610099-3	102A
610099-5	129
610099-6	159
610100	108
610100-1	161
610100-2	107
610100-3	108
610102-1	106
610106	121
610106-1	121
610107-1	108
610107-2	128
610110	129
610110-1	159
610110-2	159
610111	113A
610111-1	113A
610111-2	130
610111-4	130
610111-5	104
610111-6	152
610111-7	104
610111-8	196
610112	116
610112-1	153
610113-1	172A
610113-2	172A
610120-1	159
610121-1	6402
610121-1(PUT)	6402
610121-2	6402
610121-2(PUT)	6402
610121-3	6402
610122	140A
610122-2	165
610122-3	238
610122-6	283
610123-1	164
610124-1	101
610125-1	159
610126-1	102A
610126-2	103A
610128-1	199
610128-2	199
610128-4	108
610128-5	199
610128-6	199
610129-1	129
610129-D	229
610131-2	191
610132	123AP
610132-1	123AP
610134-1	234
610134-2	234
610134-4	234
610134-5	234
610134-6	234
610135-1	154
610136-1	106
610139-1	229
610139-2	107
610140-1	130
610142-1	289
610142-2	123AP
610142-3	123AP
610142-4	123AP
610142-5	123AP
610142-6	108
610142-7	123AP
610142-8	123AP
610143-3	123AP
610144-1	171
610144-2	171
610144-3	154
610144-4	154
610144-101	171
610145-1	233
610146-1	123AP
610146-3	123AP
610146-5	123AP
610147-1	123AP
610147-2	159
610148-1	128
610148-2	123AP
610148-2A	123AP
610148-3	128
610149-1	153
610149-2	152
610149-3	153
610150	108
610150-1	161
610150-2	123AP
610150-3	161
610151-1	199
610151-2	123AP
610151-3	199
610151-4	123AP
610151-5	199
610152-1	104
610153-1	152
610153-2	152
610153-3	152
610153-4	152
610153-5	152
610153-6	152
610155-1	196
610157-3	188
610157-4	189
610158-1	129
610158-2	159
610161-2	130
610161-4	130
610162-2	184
610162-4	152
610162-7	153
610162-8	152
610162N2	184
610164-1	132
610165-1	123AP
610165-2	123AP
610166-1	222
610167-1	123AP
610167-2	123AP
610168-1	123AP

PART NUMBER	NTE REPLACEMENT
610168-2	123AP
610174-1	108
610180-1	229
610180-1(LAST IF)	233
610181-1	319P
610181-2	161
610186-1	161
610189-1	238
610189-2	238
610190-1	190
610190-3	184
610190-4	190
610194-1	165
610194-2	163A
610194-3	165
610195-1	196
610195-2	197
610195-3	152
610195-4	153
610202-1	189
610202-2	189
610203-1	222
610203-2	222
610203-3	222
610203-4	222
610203-5	222
610203-6	222
610209-1	159
610213-1	128
610216-1	165
610216-2	165
610216-3	165
610217-1	163A
610217-2	130
610217-5	130
610223-1	159
610223-1D	283
610224-1	199
610224-9001	199
610226-1	199
610226-2	199
610226-5	199
610227-1	187
610228-1	188
610228-3	302
610228-4	302
610228-5	49
610232-1	123AP
610232-2	123AP
610232-9001	123AP
610232-9002	123AP
610233-1	165
610233-2	283
610241-1	165
610242-1	165
610245-1	163A
610245-2	163A
610246-1	106
610249-1	229
610250-1	171
610250-3	171
610356-5	199
610358-1	222
610358-2	222
610358-3	222
610360-2	159
610361-1	211
610361-5	211
610368-1	293
610370-2	123AP
610372-1	159
610384-2	159
610386-1	123AP
610392-1	238
610392-2	238
610395-1	291
610395-2	292
610404-1	262
610412-1	389
610413-1	184
610414-1	185
610419-1	229
610421-3	152
610421-4	153
610427-2	190
610428-2	49
610428-4	49
611001-3	5650
611001-4	5651
611001-5	5642
611001-6	5642
611003-3	5404
611003-4	5404
611003-5	5404
611013-1	5351
611018-1	5456
611020	102A
611064	7405
611065	7475
611066	7486
611071	7442
611111	116
611132	113A
611233	234
611428	123AP
611563	7400
611564	7402
611565	7404
611566	7410
611567	7420
611568	7440
611569	7450
611570	7453
611571	7454
611572	7490
611573	7492
611730	74193
611731	74192
611844	7486
611845	7405
611870	7476
611872	74107
611878	74H55
611900	74107
611901	74180
612005-1	712
612005-2	712
612006-1	722
612006-1M	722
612006-1Z	722
612006-2	722
612007	708
612007-1	708
612007-2	708
612007-3	708
612008-1	725
612008-2	725
612020	179
612020-1	703
612020-2	703
612020-3	703
612024-1	731
612024-3	731
612025-1	730
612025-2	730
612025-3	730
612031-1	714
612044-1	738
612061-1	783
612070-1	714
612072-1	739
612075-1	801
612076	742
612076-1	742
612076-2	742
612076-4	742
612077-1	788
612082-2	815
612082-3	815
612094-1	826
612103-3	960
612103-4	972
612112	116
612120	835
612120-1	835
612130	116
612132	116
612163-1	984
612186-1	4016B
612194-1	74LS32
612199-1	74LS00
612200-1	74LS74A
612261-1	74LS00
612273-1	984
612275-1	1075A
612303-1	1410
612305	1231A
612305-1	1231A
612305-2	1231A
612332-1	1374
612332-1(1)	1374
612332-6	1376
612334	797
612334(1)	797
612334-1	797
612338-2	822
612338-2(1)	822
612338-3	822
612338-B	822
612339-1	1413
612339-1(1)	1413
612347-1	821
612347-2	821
612347-2(1)	821
612351-1	712
612406-2	793
612444-1	1754
612448	960
612479-1	960
612479-5	968
612493-1	4053B
612494-1	778A
612496-1	1655
613020	116
613112	108
613130	116
614010	116
614020	109
614112	112
615004-8	177
615010	109
615093-2	123AP
615154-1	519
615179-1	123AP
615179-2	123AP
615180-1	159
615180-2	159
615180-3	159
615180-4	159
615246-1	941M
615268-101	941M
616010	113A
617871-1	121
618072	123AP
618126-1	123AP
618136-1	128
618139-1	121
618150-3	177
618165-1	199
618181-1	199
618197	128
618217-2	123AP
618241-2	910
618483-1	941
618580	133
618639-1	519
618810-2	123AP
618955-2	130
618960-1	198
618984-1	941
618986-2	218
618986-4	218
619006	123AP
619006-1	128
619006-7	123AP
619009-1	175
619010-1	198
619011	519
619050-1	910D
619087-1	519
619130	116
619256	5697
619256-1	5695
619361-1	175
619526-1	519
619692-1	723
619693-1	787
620782	176
630002-001	123AP
630003-110	261
630006-001	326
630007-001	159
630008-907	159
630063	5802
633977	113A
649002	130
650060	159
650175	129
650196	102
650845	177
650854	177
650859-1	102
650859-2	102
650859-3	102
650860	103
650970	121
651012	102
651030	177
651038	116
651202	121
651236	102
651891	123AP
651955	123AP
651955-1	123AP
651955-2	123AP
651955-3	199
651956	128
651995-1	123AP
651995-2	123AP
651995-3	123AP
652072	123AP
652085	121
652086	121
652091	123AP
652092	116
652230	199
652231	128
652321	154
652615	116
653406	128
654000	123AP
654001	6401
654003	121
654007	100
654010	121
654013	129
654032	177
654041	100
654420	5802
655319	121
656064	6410
656204	123
656524	123AP
656719	123AP
656746	199
657179	185
657180	184
657180-1	184
657180-2	291
657181	185
657181-2	153
658577	229
658578	123AP
658583	909D
658620	159
658657	123AP
659133	123AP
659137	159
659140	184
659141	183
659174	182
660030	102A
660031	121MP
660059	102A
660060	102A
660064	160
660070	128
660072	102A
660074	128
660077	121
660082	102A
660084	160
660085	160
660092	196
660094	121
660095	121
660097	121
660100	128
660103	121
660138	218
660142	199
660144	105
660144A	105
660203	159
660328	107
660388-02	941M
661010	113A
662194-2	152
662271-2	292
670850	121MP
670850-1	121MP
671077-6	123AP
681266	129
681266-1	129
696575-198	128
698941-1	159
699291	199
699410-140	128
699414-164	124
699739	116
700021-00	118
700043-00	116
700047-47	123AP
700047-49	123AP
700055-00	113A
700063-00	116
700080	130
700080A	130
700083	130
700083A	130
700180-00	109
700181	123AP
700191	175
700195	175
700230-00	123AP
700231-00	123AP
700647	116
700663	116
700664	116
701584-00	159
701589-00	159
701662-00	177
701678-00	161
702407-00	128
702415-00	210
702884	123AP
702885	121
702885-00	121
702886	152
705784-1	175
710206	910
710206-43	923
710398-28	909
710838-1	177
717101	152
717126-505	74H04
717136-1	74S00
717136-15	74S20
717399-3	923
717399-4	941
717399-49	941
719961-1	128
720236	123AP
720240	123AP
720453	5800
720454	5801
720455	5802
720456	5804
720457	5806
720458	5804
720463	5806
720608-13	519
720609-1	519
721272	159
723000-18	101
723001-19	101
723020-41	128
723043-1	129
723060-29	175
723423-7	175
723423-9	175
723423-16	175
723423-20	175
726654	519
730547	704
731009	102A
740183	116
740247	131MP
740289	116
740306	199
740402	109
740417	102A
740437	123AP
740438	199
740439	199
740440	199
740441	123AP
740442	199
740443	131MP
740461	123AP
740462	123AP
740463	123AP
740466	123AP
740470	123AP
740471	131
740502	1107
740543	1107
740570	116
740583	1103
740628	5071A
740629	178MP
740630	116
740828	177
740835	176
740855	6400
740856	152
740857	123AP
740885	176
740886	199
740887	199
740940	1005
740946	126
740947	126
740948	126
740949	107
740950	229
740951	229
740952	109
740953	5071A
740954	109
741050	160
741052	614
741098	1006
741100	177
741101	116
741114	199
741115	186
741116	136A
741538	85
741539	85
741686	1233
741687	1155
741689	614
741726	85
741729	290
741731	123AP
741732	235
741737	199
741738	135A
741739	5018A
741740	116
741741	177
741852	1082
741853	1056
741854	1058
741855	123AP
741856	297
741857	199
741858	195A
741859	235
741860	222
741861	123AP
741862	161
741863	234
741864	177
741865	116
741866	109
741867	140A
741868	614
741869	5072A
741870	5072A
742004	109
742008	116
742009	116
742257	108
742258	199
742259	199
742260	199
742261	85
742262	289A
742263	152
742264	153
742267	5019A
742268	116
742269	1234
742270	801
742274	107
742275	107
742362	1226
742363	1087
742364	1155
742510	1192
742512	199
742513	199
742537	107
742546	290
742547	161
742548	199
742549	229
742705	123AP
742726	977
742728	123AP
742729	293
742730	109
742732	614
742880	229
742881	289A
742882	1170
742922	5072A
742946	229
742970	235
742986	123A
743154	1003
743238	107
743239	459
743244	519
743245	612
743352	85
743353	1234
743355	5018A
743417	1226
743418	1155
743502	85
743510	289A
743511	519
743655	85
743949	5020A
744002	113A
744006	113A
744070	6402
744205	85
744215	177
744223	1170
744275	85
744293	5016A
744917	107
744920	85
744929	1170
744957	152
746003	116
746004	116
749002	107
749014	107
750106	4511B
752309	116
752314	118
755722	109
757008-02	123AP
759500	125
760005	222
760006	614
760007	177
760011	7400
760012	172A
760013	7490
760015	7476
760021	219
760037	519
760101-0005	109
760101-0006	109
760142	108
760202-0003	116
760204-0001	614
760213-0002	161
760213-0005	161
760236	123AP
760239	123AP
760249	107
760251	123AP
760253	107
760268	132
760269	159
760275	186
760276	187
760284	311
760298	135A
760304	142A
760309	5116A
760522-0002	722
761113	116
762200-14	9093
765713	125
765722	109
770339	760
770523	102A
770524	102A
770525	158
770730	102A
770768-3170756	124
771907	116
771908	166
771909	109
771910	109
771911	109
772712	109
772713	116
772714	166
772716	160
772717	160
772718	102A
772719	160
772720	102A
772721	102A
772722	102A
772723	102A
772724	102A
772725	102A
772727	102A
772728	102A
772729	102A
772732	158
772733	158
772736	102A
772737	102A
772738	107
772739	107
772740	110MP
772768	126
779821	197
785278-01	109
785278-101	123AP
785897-01	160
793356-1	130
800019-001	128
800020-001	7420
800021-001	7430
800022-001	7440
800023-001	7410
800024-001	7400
800025-001	7453
800026-001	7450
800033-1	5529
800073-6	128
800073-7	128
800080-001	7402
800132-001	123AP
800283	5429
800283-1	5429
800283-2	5429
800283-3	5429
800382-001	7475
800383-001	7483
800385-001	7442
800386-001	74193
800387-001	7404
800400-001	7474
800491-001	74121
800651-001	7406
800743-001	519
800747	102A
800806-001	7407
800946-001	128
801500	102
801501	102
801502	102
801503	102
801504	102
801506	100
801507	100
801508	102
801509	102
801510	102
801511	102
801512	123AP
801513	123AP
801514	123AP
801515	85
801516	123AP
801517	123AP
801518	121
801519	104
801520	102A
801522	179
801523	179
801524	199
801525	6401
801527	192A
801529	123AP
801530	199
801531	6401
801532	123AP
801533	172A
801534	123AP
801535	6402
801536	85
801537	130
801538	121
801539	121
801540	129
801541	159
801542	5635
801543	199
801544	186
801546	199
801547	234
801549	107
801550	123AP
801551	6402
801552	266
801553	193
801556	211
801557	284
801558	159
801559	244
801560	243
801561	159
801562	85
801563	85
801564	123AP
801566	199
801568	172A
801707	116
801711	116
801712	177
801714	116
801715	116
801716	116
801722	109
801723	116
801724	519
801726	139A
801728	177
801729	123AP
801730	5802
801731	142A
801732	100
801734	3007
801735	3009
801736	3010
801800	9924
801804	754
801805	7401
801806	7404
801807	7442
801808	7490
801809	754
801831	931
801853	994M
801855	74174
801856	74175
801857	7432
801861	7414
801862	74153
801863	931
801866	902
801867	902
801869	902
801870	902

PART NUMBER	NTE REPLACEMENT
801871	902
801872	902
801873	778A
801874	4016B
801875	4015B
801876	975
801879	2708
801880	4002B
801881	4013B
801882	4040B
801883	4049
801884	4051B
801885	4052B
801887	74LS05
801888	7404
801889	7411
801891	74LS125A
801892	74LS175
801894	74LS259
801897	74LS279
802008	519
802032-2	102A
802032-4	102A
802033-3	102A
802037-001	153
802054-0	102A
802056-0	102A
802189-7	102A
802189-8	102A
802263-0	102A
802263-1	102A
802389-2	102A
802415-2	102A
802425-0	127
802439-0	102A
802538	179
802560	102
803182-5	123AP
803369-6	123AP
803372-0	123AP
803373-0	123AP
803696	199
803733-0	123AP
803733-3	123AP
803735-3	123AP
804001	4024B
804002	74150
804006	74LS03
804007	7492
804009	7417
804010	74LS32
804011	74LS138
804013	74LS170
804016	2114
804017	4050B
804021	74LS139
804023	74LS244
804024	74LS240
804028	7403
804030	4066B
804036	956
804058	4021B
805038	928M
810000-373	123AP
810002-269	9930
810002-475	5529
810002-733	129
810002-736	128
811790	9930
811791	9946
811793	9962
811794	9932
813362	727
814044A	102A
815003	102A
815015	102A
815020	100
815020A	100
815020B	100
815021	100
815021A	100
815021B	100
815022	102A
815022A	102A
815022B	102A
815023	102A
815023A	102A
815023B	102A
815024	102A
815024A	102A
815024B	102A
815025	100
815025A	100
815025B	100
815026	101
815026A	101
815026B	101
815026C	101
815026D	101
815027	100
815027A	100
815027B	100
815027C	100
815028	100
815028A	100
815028B	100
815028C	100
815029	102A
815029A	102A
815029B	102A
815029C	102A
815030	102A
815030A	102A
815030B	102A
815031	102A
815031A	102A
815031B	102A
815033	102
815034	102
815034A	102A
815034B	102A
815034C	102A
815036	100
815036A	100
815036B	100
815036C	100
815037	100
815037A	100
815037B	100
815037C	100
815038	102A
815038A	102A
815038B	102A
815038C	102A
815041	100
815041A	100
815041B	100
815041C	100
815043	100
815043A	100
815043B	100
815043C	100
815055	100
815056	100
815057	100
815058	102A
815058A	102A
815058B	102A
815058C	102A
815058X	102A
815064	126
815064A	126
815064B	126
815064C	126
815065	100
815065A	100
815065B	100
815065C	100
815066	100
815066A	100
815066B	100
815066C	100
815067	160
815067A	160
815067B	160
815067C	160
815068	126
815068A	126
815068B	126
815068C	126
815069	102A
815069A	102A
815069B	102A
815069C	102A
815070	102A
815070A	102A
815070B	102A
815070C	102A
815070D	102A
815074	102A
815075	103A
815076	103A
815082	102A
815083	102A
815101	100
815103	100
815104	102A
815105	100
815107	100
815108	100
815109	100
815114	102A
815115	100
815116	100
815117	100
815118	102A
815120	102A
815120A	102A
815120B	102A
815120C	102A
815120D	102A
815120E	102A
815122	102A
815133	123AP
815134	123AP
815136	102A
815137	121MP
815137B	121
815137Y	121
815138	116
815139	102A
815142	116
815158	102A
815160	102A
815160-C	102
815160-I	102A
815160-J	102A
815160-K	102A
815160-L	102A
815160-O	102A
815160-P	102A
815160-Q	102A
815160A	102A
815160B	102A
815160C	102A
815160D	102A
815160E	102A
815160F	102A
815160H	102A
815164	108
815165	108
815166	124
815166-4	124
815167-3	124
815170	108
815171	123AP
815171D	123AP
815172	108
815172A	108
815173	199
815173A	108
815173C	108
815173F	108
815174	123AP
815174L	123AP
815175	124
815175H	124
815177	102A
815178	102A
815179	102A
815180-3	124
815180-4	124
815180-7	124
815181	102A
815181-B	102
815181A	102A
815181B	102A
815181C	102A
815181D	102A
815182	123AP
815183	123AP
815184	123AP
815184E	123AP
815185	129
815185E	129
815186	123AP
815186C	123AP
815186L	123AP
815189	102A
815190	123AP
815191	123AP
815193	160
815195	102A
815196	102A
815197	160
815198	123AP
815199	159
815199-6	159
815201	123AP
815202	123AP
815203-3	121MP
815203-5	121MP
815206	161
815209	108
815210	123AP
815211	159
815212	123AP
815213	159
815215	711
815218-3	102A
815218-4	103A
815227	123AP
815228(EMERSON)(NPN)	188
815228(EMERSON)(PNP)	189
815228(NPN)	188
815228(PNP)	189
815228A	102A
815228A01	102
815228A1	102A
815228B	102A
815228B1	102A
815229	159
815232(NPN)	103A
815232(PNP)	102A
815233	123AP
815234	160
815236	159
815237	123AP
815243(1/2MP)(NPN)	128
815243(1/2MP)(PNP)	106
815243(NPN)	123AP
815243(PNP)	159
815246-1	130
815246-2	121
815247	159
815259	711
815308	100
815308A	100
816135	124
817020	507
817032	109
817042	116
817043	116
817044	116
817053	116
817064	116
817066	116
817067	116
817068	116
817068P	116
817074	113A
817077	109
817079	116
817082	109
817088	116
817104	116
817109	116
817111	116
817112	116
817114	116
817117	116
817120	507
817121	116
817122	116
817123	118
817125	109
817126	113A
817127	113A
817128	116
817130	116
817133	116
817134	116
817135	116
817138	116
817140	116
817141	116
817143	116
817148	116
817149	120
817155	142A
817156	116
817157	116
817158	109
817159	109
817160	110MP
817161	116
817164	116
817166	116
817167	116
817172	177
817173	135A
817177	110MP
817179	156
817179A	156
817180	116
817190	177
817193	125
817194	109
817195	116
817197	139A
817199	109
817208	142A
817209	156
824960-0	108
825065	102A
829704-6	74H21
829704-7	74H21
838105	159
845050	123AP
848082	123AP
851759-3	160
851881	123
852158-7.1	116
852158-7-1	116
853640	160
853864-0	160
860001-8	128
860001-153	519
860003-45	911
860003-46	910
860003-99	9944
860003-101	9930
860003-121	9932
860003-141	9945
860003-151	9945
860003-161	9936
860011	177
862200-16	9093
862209-16	9962
870006	192
871125	109
880092	131
881916	7474
882028	130
883802	123AP
889302	744
889779F	736
891008	159
891032	130
894876	123AP
900201-81	128
900201-104	128
900201-105	128
900201-167	128
900545-2	519
900546-2	519
900546-20	177
900552-6	123AP
900552-8	123AP
900552-17	159
900552-20	123AP
900552-30	123AP
900750-01	116
900750-02	116
900756-01	166
900850-01	519
900850-05	177
900850-16	177
900927-01	5071A
900927-02	5014A
900941-01	5015A
900948-11	5010A
901435-01	6502
901453-01	2114
901458-01	6532
901502-01	4066B
901510-01	9602
901521-01	74LS00
901521-02	74LS04
901521-03	74LS08
901521-06	74LS74A
901521-17	74LS42
901521-18	74LS139
901521-20	74LS125A
901521-21	74LS02
901521-22	74LS27
901521-26	74LS193
901521-29	74LS373
901521-30	74LS14
901521-32	74LS86
901521-34	74LS175
901521-54	74LS197
901521-57	74LS257
901521-58	74LS258
901521-68	74LS629
901522-01	7417
901522-03	74177
901522-04	7400
901522-06	7406
901522-30	7407
901523-01	955M
901523-03	978
901523-04	922
901523-08	927D
901527-01	966
901527-02	960
902521	160
902652-01	123AP
902653-01	152
902658-01	123AP
902671	85
902682	289A
902686-01	123AP
902693-01	85
902694-01	152
902717	290A
902720	290A
905129-01	5332
906103-02	5002A
906128-01	974
906129-01	5332
908098	909
908703-1	177
908705-1	519
908705-2	519
908721-1	177
908742-1	519
908844-1	199
908864-2	159
910050-2	102A
910062-1	102A
910070-6	102A
910088	128
910094-4	102A
910634	128
910799	108
910807-11	175
910952	185
911743-1	123AP
912002	754
916009	123AP
916028	123AP
916029	108
916030	123AP
916031	123AP
916031(CARTAPE)	199
916031(PENNYS)	123AP
916033	199
916034	128
916046	186
916049	107
916050	123AP
916051	159
916052	199
916055	199
916055(I.C.)	1010
916059	123AP
916060	108
916061	1029
916062	159
916063	1092
916064	1045
916067	1103
916068	107
916069	108
916070	1142
916071	1003
916072	1006
916081	1010
916082	132
916083	1081A
916084	1052
916085	1082
916091	123AP
916092	1092
916098	1081A
916100	199
916101	1127
916105	1104
916106	1170
916110	1155
916111	746
916112	709
916113	801
916114	184
916118	235
916119	295
916121	1234
916150	977
921150-021	519
921608	116
922021	109
922092	116
922094	116
922114	128
922125	128
922183	116
922214	614
922311	116
922358	139A
922359	614
922360	116
922433	177
922524	139A
922567	116
922603	139A
922604	109
922693	142A
922799	116
922860	116
922873	177
922896	100
922943-1	519
922950	5074A
922969	116
923147	177
923233	5020A
924605-3	116
924801-5	116
924805-5	116
924805-8	116
925075-501B	519
925252-1	519
925252-2	519
925252-4	519
925252-102	519
925253-3	519
925297	519
925297-1	519
925521-1B	177
925521-1C	177
925915-101	177
925939-101	177
925940-1B	177
925940-501B	177
928103-1	123AP
928291-101	128
928291-102	128
928408-101	159
928506-101	910
928510-1	9951
928510-101	9951
928512-101	9930
928514-1	9946
928514-101	9946
928515-101	9945
928517-101	9933
928533-101	9962
928560-1	9944
928560-101	9944
928571-1	9944
928608-1	703
928608-101	703
930236	123AP
930293	519
930347-1	7420
930347-2	7430
930347-3	7400
930347-4	7472
930347-5	7440
930347-6	7454
930347-7	7453
930347-9	7491
930347-10	7420
930347-11	7402
930347-12	7451
930347-13	7404
930347-15	7405
930419	923D
932017-0001	128
932022-0001	519
932030-1	909
932033-1	519
932040	159
932050-1	519
932055-1	128
932081-1	175
932107-1	159
932292-1C	9930
933044-2D	9932
934362-3	171
941295-2	123AP
941295-3	123AP
942677-1	109
942677-2	109
942677-3	109
942677-4	109
942677-6	109
942677-7	109
942677-9	177
943502	519
943720-001	123AP
944148	5695
945820-4	116
954330-2	123AP
959492-2	123AP
960106-3	159
960201	107
960202	107
960494-1	128
960494-2	128
961544-1	123AP
962685	112
964158	112
964298	109
964547-2	199
964634	108
964688(NPN)	103A
964688(PNP)	102A
964713	108
964999	112
965000	123AP
965073	112
965074	108
965632	161
965633	108
965634	108
965936	112
969099-1	519
970046	108
970046-1	108
970046-2	108
970046A	108
970047	112
970107	129
970108	128
970244	108
970245	108
970246	159
970247	123AP
970248	159
970249	108
970250	123AP
970251	159
970252	123AP
970253	132
970254	159
970255	124
970309	108
970309-1	108
970309-2	108
970309-3	108
970309-4	108
970309-5	108
970309-12	108
970310	108
970310-1	108
970310-2	108
970310-3	108
970310-4	108
970310-5	108
970310-12	108
970311	107
970332	108
970332-12	108
970659	123AP
970660	123AP
970661	123AP
970662	123AP
970663	159
970759	112
970762	159
970762-6	129
970911	108
970916	123AP
970916-6	123AP
970939	107
970940	123AP
970962	107
970963	112
971035	107
971036	112
971059	159
971457	116
971458	116
971459	161
971460	199
971477	102
971526	107
971904	161
971905	159
972155	123AP
972156	123AP
972214	123AP
972215	123AP
972216	116
972217	5079A
972258-1	109
972258-2	109
972258-3	109
972258-4	109
972258-5	109
972258-6	109
972258-8	109
972258-9	109
972259-8	109
972305	161
972306	107
972307	107
972417	107
972418	107
972419	107
972420	107
972571-4	116
972571-5	125
972571-6	116
972571-7	116
973935-20	116
973936-1	116
973936-2	116
973936-3	116
973936-4	116
973936-5	116
973936-6	116
973936-7	116
973936-8	116
973936-9	116
973936-10	116
973936-11	116
973936-12	116
973936-13	116
973936-14	116
973936-15	116
973936-16	116
973936-17	116
973936-18	116
973936-19	116
973936-20	125

PART NUMBER	NTE REPLACEMENT
973936-21	116
973962-1	116
980052	105
980052A	105
980132	121
980134	121
980135	121
980136	100
980138	108
980139	108
980140	160
980142	160
980143	116
980144	102A
980146	160
980147	123AP
980148	102A
980149	102A
980150	127
980153	102A
980155	121
980164	116
980316	100
980372	126
980373	126
980374	126
980375	102A
980376	102A
980426	100
980432	100
980434	100
980435	160
980437	121
980438	100
980439	100
980440	123AP
980441	160
980462	105
980462A	105
980463	105
980463A	105
980505	160
980506	160
980507	160
980508	102A
980509	160
980510	102A
980511	102A
980514	109
980514A	160
980540	116
980545A	160
980626	126
980636A	160
980833	126
980834	126
980835	126
980836	102A
980837	102A
980958	126
980959	126
980960	102A
980961	102A
980964	116
981143	160
981144	160
981145	160
981146	160
981147	102A
981148	102A
981149	102A
981150	109
981151	614
981153	109
981203	160
981204	160
981206	102A
981207	109
981248	118
981371	120
981445	116
981522	109
981672	102A
981673	102A
981674	102A
981675	102A
981676	109
981739	116
981952	116
981953	116
981954	116
981955	116
981956	116
981959	160
981969	105
981969A	105
982065	109
982150	126
982151	102A
982152	102A
982214	116
982231	123AP
982244	102A
982253	116
982254	139A
982267	126
982268	108
982269	108
982271	109
982275	109
982279	722
982283	102A
982284	102A
982285	102A
982289	126
982290	109
982300	128
982307	131
982321	108
982322	160
982324	614
982361	113A
982363	113A
982374	160
982375	102A
982376	124
982377	116
982497	160
982510	123AP
982511	123AP
982512	123AP
982523	175
982526	116
982528	124
982531	102A
982532	102A
982815	108
982816	108
982817	108
982818	108
982819	108
982820	102
982822	109
982823	116
983011	138A
983012	176
983036	121
983055	181
983095	108
983096	108
983097	123AP
983099	109
983101	116
983233	107
983234	107
983235	107
983236	126
983237	102A
983238	102A
983239	109
983271	126
983272	126
983405	102A
983406	102A
983407	102A
983408	102A
983409	102A
983411	102A
983413	116
983689	177
983742	107
983743	123AP
983744	178MP
983795	121
983874	121
983945	105
983975	121
983995	118
984156	108
984158	108
984159	108
984160	102A
984161	158
984162	177
984163	109
984182	116
984183	116
984184	116
984189	116
984191	161
984192	161
984193	159
984194	108
984195	108
984196	128
984197	123AP
984198	123AP
984200	109
984221	102A
984222	123AP
984224	123AP
984226	109
984227	154
984228	102A
984229	128
984252	138A
984254	116
984259	130
984259A	130
984260	506
984261	121
984286	123AP
984431	121
984521	131
984522	116
984577	108
984590	123AP
984591	123AP
984593	123AP
984594	116
984608	124
984666	109
984667	109
984685	126
984686	123AP
984687	123AP
984688(NPN)	103A
984688(PNP)	102A
984690	166
984713	116
984743	108
984744	108
984745	123AP
984746	102
984794	156
984795	156
984851	108
984852	108
984853	108
984854	123AP
984875	108
984876	107
984877	107
984878	107
984879	123AP
984880	177
984881	110MP
984882	116
984932	124
985036	121
985087	123AP
985096	108
985097	108
985098	123AP
985099	123AP
985100	123AP
985101	123AP
985102	123AP
985103	131
985104	116
985105	116
985106	177
985175	221
985215	108
985216	102A
985217	102
985218	116
985431	121
985432	105
985442	107
985442A	108
985443	121
985443A	108
985444	107
985444A	108
985445	126
985445A	160
985446	126
985446A	160
985447	121
985448	138A
985449	121
985453	121
985455	121
985468	102A
985468A	102A
985469	102A
985469A	102A
985470	158
985470A	102A
985471	158
985472	116
985543	123AP
985609	102A
985610	102A
985611	126
985619	107
985621	109
985686	121
985715	132
985735	103A
985735A	103A
985957	614
985961	5022A
986015	106
986030	129
986302	102A
986305	158
986414	116
986542	123AP
986543	158
986576	107
986577	177
986578	135A
986634	108
986635	108
986636	123AP
986637	116
986693	107
986694	107
986766	102A
986779	158
986930	222
986931	129
986932	186
986933	187
986934	177
986935	116
987010	123AP
987030	128
988000	108
988001	108
988002	108
988003	123AP
988005	158
988048	614
988049	117
988050	140A
988051	116
988080	121
988336	121
988413	121
988414	105
988468	121
988977	105
988985	108
988986	108
988987	108
988988	108
988989	108
988990	159
988991	123AP
988992	193
988993	128
988994	109
988995	177
988996	177
988997	109
988998	109
989171	105
989387	121
989615	105
989692	105
989693	105
989709	909
991064	125
991129	125
991421	125
991422	125
991429	125
992052	229
992066	199
992108	161
992129	123AP
992143	109
992150	177
992157-1	519
992171	116
992269	74145
992289	102
993570-4	129
993624-2	128
994634	108
995001	121
995002	102A
995003	102A
995012	194
995014	121
995015	121
995016	123AP
995017	123AP
995022	703
995025	194
995029	194
995030	124
995053	722
995053-1	722
995870-1	123AP
995870-3	123AP
995928 1	128
995928-1	128
996746	123AP
996817	152
998280-930	9930
998280-945	9945
998280-962	9962
999106-2	911
1000100	7492
1000100-000	7492
1000101	7493A
1000101-000	7493A
1018715	124
1018734-001	124
1022612	123AP
1043176-1	116
1043176-2	116
1043176-3	116
1043176-4	116
1043176-5	116
1045013	116
1045154-1	116
1045154-2	116
1045154-3	116
1045154-4	125
1045154-5	156
1045154-6	156
1061854-2	126
1107832-6	115
1107832-7	113A
1107832-8	113A
1107832-9	113A
1107832-10	113A
1107832-11	113A
1114045T	290A
1114062	289A
1115188	5013A
1115223	552
1121008/7611	109
1127859	123AP
1142415-2	109
1211016/7603/7608	102A
1211017/7603/7608	102A
1211018/7603/7608	102A
1221028	105
1221615	121
1221625	104
1221648	100
1221649	100
1221900	5072A
1221962	123AP
1222123	123AP
1222133	123AP
1222136	160
1222314	160
1222371	160
1222424	123AP
1222463	108
1223770	109
1223771	519
1223772	116
1223773	140A
1223781	107
1223782	123AP
1223783	152
1223784	195A
1223785	195A
1223786	195A
1223909	1167
1223910	1166
1223911	319P
1223912	123AP
1223913	123AP
1223914	290
1223915	199
1223916	123AP
1223917	306
1223918	235
1223919	161
1223920	229
1223921	109
1223925	614
1223926	135A
1223927	139A
1223928	116
1223929	116
1223930	177
1223931	109
1224031	294
1224076	1192
1224970	5072A
1258444	116
1261915-191	129
1261915-383	123AP
1288055	128
1289050	130
1300101	123
1300201	129
1300301	183
1300401	159
1301101	129
1301601	6410
1301701	85
1302001	172A
1302201	290A
1302401	326
1302601	196
1302701	106
1302801	159
1302901	123AP
1303001	159
1303256	156
1303401	184
1303601	210
1303701	211
1304201	184
1304401	6410
1304501	257
1317303-1	159
1320135	123AP
1320135A	123AP
1320135BC	123AP
1320135C	123AP
1322966	503
1330021-0	904
1330021-1	904
1371159-1	199
1371159-2	199
1390655	506
1403201	9601
1407205-1	121
1407206-1	121
1408615-1	108
1408640-1	108
1408649-1	109
1408694-1	222
1415721-1	506
1415721-35	506
1415742-5	797
1415762-1	230
1415762-2	231
1415778-1	5641
1415778-2	5641
1417013-1	221
1417014-1	222
1417019-1	108
1417302-1	123AP
1417303	298
1417303-1	129
1417303-2	129
1417306-1	123AP
1417306-2	123AP
1417306-4	123AP
1417306-5	123AP
1417306-9	123AP
1417306-11	123AP
1417306-13	123AP
1417308-1	199
1417308-2	199
1417309-2	123AP
1417309-3	123AP
1417309-4	123AP
1417312-1	123AP
1417312-2	123AP
1417316-1	188
1417317-1	189
1417318	194
1417318-1	123AP
1417318-2	297
1417318-7	123AP
1417320	130
1417320-1	130
1417321-1	194
1417322-1	175
1417324-1	123AP
1417325-1	192
1417330-3	159
1417330-4	159
1417331-1	165
1417335-1	165
1417338-5	128
1417339-1	159
1417340-2	123AP
1417342-1	128
1417343-2	123AP
1417343-3	123AP
1417344-1	128
1417345-2	128
1417347-1	159
1417347-3	159
1417349-2	128
1417352-5	171
1417353-5	189
1417356-2	130
1417358-1	152
1417359-1	185
1417360-3	229
1417361-1	191
1417362-1	198
1417362-4	171
1417363-1	159
1417364-1	196
1417366-1	165
1417367-1	395
1417369-2	222
1417369-4	222
1417370-1	165
1417372-1	222
1417373-1	159
1417373-2	159
1417374-2	123AP
1417374-3	123AP
1417374-4	123AP
1417375-6	172A
1417377-6	108
1417377-7	108
1417380-1	130
1417381-2	128
1417382-1	5400
1417398-5	152
1417408-1	222
1417409-1	222
1417872-11	519
1420427-1	102A
1420427-2	102A
1420427-3	102A
1421207-1	177
1423316-1	229
1423391-1	108
1440977	118
1440977-1	118
1440990	120
1442415-2	112
1442415-3	112
1442415-4	112
1443024-1	199
1443200-3	102A
1443223-1	614
1444875-1	142A
1445470-2	503
1445470-501	503
1445470-502	503
1445470-503	503
1445470-504	504
1445829-501	189
1445829-502	189
1445829-503	188
1445829-504	188
1446149-1	506
1446149-2	506
1449098-1	154
1451798-1	108
1462445-1	711
1462516	712
1462516-001	712
1462516-1	712
1462554	730
1462554-1	730
1462554-2	730
1462554-3	730
1462554-4	730
1462577	780
1463641-1	536A
1463641-2	536A
1463677-1	780
1463677-2	780
1463677-3	780
1463681-1	904
1463686-1	712
1464437-1	787
1464437-2	787
1464437-3	787
1464438-1	788
1464438-2	788
1464438-3	788
1464439-2	789
1464460-2	789
1464460-3	789
1464607-1	500A
1464607-5	500A
1464607-6	500A
1464607-7	500A
1464607-8	500A
1464607-9	533
1464607-10	533
1464607-11	533
1464686-1	712
1464778-9	507
1464846-1	949
1464846-2	949
1464984-1	500A
1464984-2	500A
1465158-1	797
1465158-2	797
1465345-1	1174
1465615	1176
1465615-1	1176
1465615-2	1176
1465637-1	986
1465640-2	842
1465641-2	841
1466860-1	532
1466860-2	537
1466862-2	500A
1466865-1	532
1470872-6	177
1470990	120
1470990-1	120
1471036-14	121
1471036-20	121
1471072-4	177
1471100-1	102A
1471100-8	102A
1471100-9	102A
1471101-2	102A
1471101-3	102A
1471101-4	102A
1471101-15	102A
1471102-41	121
1471104-5	126
1471104-6	126
1471104-7	126
1471104-8	126
1471112-3	129
1471112-7	159
1471112-8	159
1471112-8-9	129
1471112-9	159
1471112-10	234
1471112-12	129
1471113-2	123AP
1471113-3	123AP
1471114-1	159
1471115-1	123AP
1471115-2	199
1471115-3	199
1471115-4	199
1471115-10	161
1471115-11	199
1471115-12	123AP
1471115-13	108
1471115-14	108
1471117-1	124
1471120-7	123AP
1471120-8	123AP
1471120-8-9	123AP
1471120-11	199
1471120-14	128
1471120-15	123AP
1471122	199
1471122-6	199
1471122-7	199
1471123-2	128
1471123-3	128
1471123-4	128
1471123-5	128
1471124-5	179
1471125-3	127
1471132-002	196
1471132-2	184
1471132-3	196
1471132-4	152
1471132-5	196
1471132-6	181
1471133-1	188
1471134	153
1471134-1	189
1471135-001	130
1471135-1	130
1471135-2	181
1471136-3	172A
1471139-1	180
1471140-1	184
1471141-1	185
1471393-4	167
1471405-1	156
1471777-11	5023A
1471822-11	110MP
1471839-1	612
1471858-1	116
1471872-001	116
1471872-004	116
1471872-006	116
1471872-008	116
1471872-1	177
1471872-2	177
1471872-3	506
1471872-4	177
1471872-5	519
1471872-6	116
1471872-7	177
1471872-8	177
1471872-10	178MP
1471872-11	519
1471872-12	177
1471872-13	177
1471872-14	506
1471872-15	109
1471872-16	177

PART NUMBER	NTE REPLACEMENT
1471872-17	109
1471872-18	177
1471876-6	178MP
1471878-3	5071A
1471893-4	149A
1471898-3	137A
1471898-4	149A
1471898-5	136A
1471898-7	143A
1471922-1	112
1471922-2	112
1471922-4	112
1472171-32	116
1472446	121
1472446-1	121
1472450-1	108
1472460-1	117
1472460-2	177
1472460-4	117
1472460-5	117
1472460-6	177
1472460-7	177
1472460-8	177
1472460-9	174
1472460-13	506
1472460-14	156
1472460-16	116
1472474-2	154
1472475-1	199
1472482-1	102A
1472494-1	127
1472495-1	123AP
1472500-1	127
1472501-1	159
1472633	161
1472634-1	108
1472636-1	107
1472654-1	229
1472872-4	177
1473500-1	123AP
1473501-1	159
1473502-1	704
1473502-2	704
1473503	124
1473503-1	124
1473505-1	123AP
1473506-1	199
1473508-1	128
1473512-1	121
1473514-1	127
1473515-1	121
1473516-1	129
1473519-1	123AP
1473520-1	124
1473521-1	108
1473523-1	159
1473524-1	229
1473524-2	108
1473524-3	107
1473526-1	123AP
1473527-1	123AP
1473529-1	107
1473530-1	108
1473530-2	108
1473532-1	123AP
1473533-1	108
1473535-1	161
1473535-1(RCA)	161
1473536-001	123AP
1473536-1	123AP
1473536-2	161
1473537-1	108
1473538-1	123AP
1473539-1	123AP
1473540-1	159
1473541-1	154
1473543-1	161
1473544	194
1473544-1	107
1473545-1	128
1473546-1	123AP
1473546-2	123AP
1473546-3	123AP
1473547-1	128
1473548-1	123AP
1473549-1	159
1473549-2	159
1473550-1	123AP
1473551-1	123AP
1473552-1	154
1473553-1	128
1473554-1	123AP
1473555-1	123AP
1473555-2	123AP
1473555-3	128
1473555-I	128
1473556-1	123AP
1473557-1	123AP
1473558-1	107
1473559-001	106
1473559-1	159
1473560	128
1473560-002	123AP
1473560-1	128
1473560-2	128
1473561-1	128
1473561-Y	123AP
1473562-1	159
1473563-1	159
1473564-1	162
1473565-001	128
1473565-1	128
1473566-1	128
1473567-1	124
1473567-2	184
1473567-4	152
1473568-1	108
1473569-1	123AP
1473570-1	159
1473570-2	159
1473571	171
1473571-1	161
1473572-1	123AP
1473572-3	128
1473573-1	103A
1473574	194
1473574-1	159
1473576	161
1473576-1	233
1473577-1	161
1473578-1	102A
1473579-1	161
1473580-1	128
1473581-1	159
1473582-1	123AP
1473583-7	230
1473583-8	230
1473584-1	124
1473585-1	231
1473585-5	230
1473585-6	231
1473585-7	230
1473585-8	231
1473586	161
1473586-2	123AP
1473588-2	221
1473588-8	222
1473589-1	123AP
1473590-1	151A
1473591-1	159
1473592-1	129
1473593-1	128
1473595-1	123AP
1473597	106
1473597-1	159
1473597-2	159
1473597-7	106
1473598-1	126
1473598-2	102A
1473599-1	159
1473601	163A
1473601-001	123AP
1473601-1	123AP
1473601-2	123AP
1473602	194
1473603-1	108
1473604-1	172A
1473604-3	108
1473606-1	108
1473608-002	128
1473608-1	128
1473608-2	128
1473608-3	128
1473610-1	229
1473611	152
1473611-1	152
1473612	152
1473612-1	196
1473612-11	152
1473613-2	191
1473613-3	191
1473613-4	171
1473613-5	128
1473614-1	123AP
1473614-2	199
1473614-3	123AP
1473615-1	128
1473616-1	129
1473617-1	108
1473617-2	107
1473618-1	222
1473619-1	5652
1473619-3	5641
1473620	159
1473620-001	106
1473620-1	159
1473621-1	196
1473622	128
1473622-002	128
1473622-1	123AP
1473622-2	128
1473623-1	196
1473624-1	197
1473624-21	185
1473625-001	192
1473625-1	128
1473626-1	123AP
1473627-1	159
1473628-1	188
1473628-2	171
1473628-3	188
1473629-1	189
1473629-3	189
1473631-1	123AP
1473632-1	171
1473632-2	186
1473632-3	196
1473633-1	171
1473634-1	165
1473635	222
1473635-1	222
1473635-2	221
1473636-1	124
1473637-1	162
1473638-1	218
1473640-1	196
1473647-1	165
1473648-1	127
1473649-1	165
1473651-1	106
1473652-1	108
1473656-1	190
1473656-2	182
1473656-4	154
1473657-1	229
1473657-2	229
1473665-2	130
1473666-1	129
1473669-1	165
1473669-2	165
1473676-1	161
1473676-1(3RD LF)	233
1473677-1	711
1473677-3	780
1473679-1	128
1473679-2	154
1473680-1	161
1473681-1	152
1473681-I	152
1473682-1	185
1473683-1	130
1473686-1	222
1473687-1	191
1473688-1	5404
1473777-2	145A
1474178-10	116
1474613-2	171
1474717-2	145A
1474777-002	145A
1474777-1	142A
1474777-2	145A
1474777-3	5103A
1474777-4	147A
1474777-7	149A
1474777-8	116
1474777-9	144A
1474777-11	144A
1474777-12	147A
1474777-13	145A
1474777-16	147A
1474777-20	5074A
1474778	116
1474778-013	116
1474778-2	116
1474778-3	116
1474778-4	156
1474778-5	506
1474778-6	506
1474778-7	116
1474778-8	156
1474778-9	507
1474778-10	116
1474778-11	116
1474778-13	156
1474778-14	506
1474778-16	177
1474778-21	506
1474788-10	116
1474872-1	177
1475721-1	125
1476049-2	506
1476161-11	558
1476161-12	506
1476161-13	558
1476171-1	116
1476171-8	116
1476171-11	558
1476171-11(TRANS)	104
1476171-13	558
1476171-13(DIODE)	506
1476171-13(TRANS)	104
1476171-17	506
1476171-18	506
1476171-21	156
1476171-22	506
1476171-25	506
1476171-26	506
1476171-28	116
1476171-29	116
1476171-30	552
1476171-31	116
1476171-32	506
1476171-33	177
1476171-34	506
1476172-12	506
1476179-001	109
1476179-1	109
1476183-2	506
1476183-3	503
1476183-4	505
1476183-5	506
1476183-6	506
1476183-8	506
1476188-1	123AP
1476188-1(REGULATOR)	5074A
1476690-1	177
1476690-2	177
1476930	505
1476930-1	505
1476930-2	505
1476933-501	505
1476933-502	505
1476933-503	505
1477022	135A
1477022-1	177
1477046-1	145A
1477046-4	142A
1477046-5	5085A
1477046-8	5127A
1477046-10	5077A
1477046-11	5135A
1477046-13	5136A
1477046-14	5134A
1477046-16	5133A
1477046-17	5116A
1477046-19	5119A
1477046-20	5142A
1477046-21	5131A
1477080-501	145A
1477081-501	145A
1478023-1	118
1478164-1	147A
1478164-2	615P
1478564-1	310
1478564-2	308
1478564-5	310
1479979-1	161
1479979-2	108
1487631	116
1501883	123AP
1502039	128
1502630	123AP
1503097-0	159
1522237-20	123AP
1560048	912
1563295-101	123AP
1582501	925
1588035-42	177
1596408	123AP
1604609-2	909
1611708-2	123AP
1612738-1	199
1616226-1	159
1617032	159
1617510-1	123AP
1638776-103JS1659	519
1641141-101	177
1641141-102	177
1642606B1	135A
1642606B4	137A
1642606B6	136A
1662258-6	5987
1680008-01	519
1690019-01	123AP
1690019N137	6402
1700001	159
1700008	123AP
1700019	123AP
1700020	229
1700032	229
1700033	229
1700034	159
1700035	311
1700036	152
1700037	195A
1700038	195A
1701790-1	130
1702601-1	130
1771872-12	519
1773599-1	290
1780142	159
1780145-1	123AP
1780145-2	123AP
1780145-2-001	123AP
1780169-1	177
1780174-1	519
1780522-1	159
1780522-2	159
1780522-2-001	159
1780724-1	123AP
1780738-1	123AP
1800002	109
1800006	116
1800009	519
1800012	136A
1800013	140A
1800017	156
1800018	116
1800019	5092A
1800020	5085A
1802520-001	941
1802677-1	923D
1802765	940
1810037	108
1810038	108
1810039	108
1811119	116
1813913-1	177
1815036	108
1815037	108
1815039	108
1815041	123AP
1815042	123AP
1815043	123AP
1815045	108
1815047	108
1815054	123AP
1815067	108
1815068	108
1815139	103
1815153	128
1815154	123AP
1815154-9	128
1815154/7	192
1815156	128
1815157	128
1815157-9	128
1815159	128
1817004	108
1817005	123AP
1817005-3	108
1817006	128
1817006-3	108
1817007	123AP
1817008	108
1817017	103A
1817045	108
1817108	123AP
1819045	108
1820657	118
1820829	128
1826065-3	532
1826860-1	500A
1827322	129
1835667	197
1846794-1	177
1851490	5995
1851515	123AP
1851516	175
1851517	181
1851518	175
1861223-1	159
1872425-1	909
1887048	120
1888232	145A
1895989-1	9094
1895991-1	9946
1895992-1	9962
1895993-1	9930
1895994-1	9932
1895995-1	9933
1905490-1	519
1908519	519
1914062-1	9936
1944313A1	128
1944748	179
1945294	159
1945295A1	145A
1950003	519
1950039	123AP
1950052	159
1950056-1	159
1950060	177
1950160	152
1956016	102A
1956197	5072A
1956486	116
1960023	123AP
1960083-1	128
1960085-2	154
1960177-2	123AP
1960584	121
1960632	179
1960642	151A
1960643	102A
1961479	121
1961480	121
1961835	121
1961837	102A
1961843	116
1962323	127
1962326	179
1962594	116
1965016	129
1965017	121
1965019	139A
1966079	121
1966808	116
1967784	181
1967799	128
1967799-1	128
1967801	128
1967813	116
1968958	123AP
1968959	128
1968977	130
1969113	124
1969281	159
1969497	116
1971296	175
1971489	128
2000287-28	102A
2000433-150	109
2000625-31	102A
2000625-32	102A
2000625-33	102A
2000625-34	102A
2000625-36	116
2000626-32	116
2000646-103	123AP
2000646-104	160
2000646-105	108
2000646-106	126
2000646-107	123AP
2000646-108	102A
2000646-109	126
2000646-110	127
2000646-111	158
2000646-113	121
2000646-115	116
2000646-119	116
2000646-120	116
2000648-21	160
2000648-22	160
2000648-23	126
2000648-26	109
2000648-120	116
2000752-80	128
2000757	113A
2000757-18	109
2000757-19	178MP
2000757-79	113A
2000757-80	108
2000804-7	108
2000804-8	108
2000804-9	102A
2001653	102A
2001653-20	126
2001653-21	126
2001653-22	100
2001653-23	102A
2001653-24	102A
2001653-58	160
2001653-59	160
2001786-134	109
2001786-141	116
2001786-142	125
2001786-207	116
2001809-47	102A
2001809-48	102A
2001809-48A	102A
2001809-48B	102A
2001812-65	100
2002151-020	109
2002151-18	160
2002151-18A	160
2002151-19	102A
2002151-20	109
2002152-14	102A
2002153-58	160
2002153-59	160
2002153-60	160
2002153-71	102A
2002153-76	160
2002153-77	123AP
2002153-78	102A
2002153-83	103A
2002207	614
2002207-2	614
2002209-1	139A
2002209-4	137A
2002209-5	140A
2002209-7	5077A
2002209-9	140A
2002209-10	142A
2002209-11	5072A
2002210-110	102A
2002211-24	102A
2002211-25	102A
2002331-46	143A
2002332-53	108
2002332-54	108
2002332-55	108
2002332-56	108
2002332-57	116
2002332-58	116
2002336-19	126
2002336-20	109
2002336-115	116
2002402	177
2002402-29	116
2002403-19	126
2002620-18	108
2002620-19	108
2002621-2	123AP
2003069	116
2003069-1	125
2003069-2	177
2003069-4	109
2003069-5	601
2003069-6	177
2003073-0701	123AP
2003073-0702	159
2003073-8	102A
2003073-9	123AP
2003073-10	123AP
2003073-11	160
2003073-12	160
2003073-13	160
2003073-14	102A
2003073-15	102A
2003073-16	102A
2003073-67	116
2003073-68	116
2003073-91	130
2003073-91A	130
2003168-135	123AP
2003168-136	123AP
2003229-25	123AP
2003239-65	123AP
2003321	928S
2003342-109	108
2003342-244	107
2003779-22	107
2003779-23	107
2003779-24	107
2003779-25	107
2003779-26	139A
2004107-40	113A
2004357-106	109
2004358-123	102A
2004358-142	116
2004358-168	102A
2004746-87	124
2004746-114	108
2004746-115	108
2004746-116	129
2004746-117	129
2005300	5882
2005779-26	138A
2006226-14	102A
2006227-51	123AP
2006334-31	158
2006334-115	123AP
2006334-155	128
2006422-132	109
2006422-133	116
2006431-44	108
2006431-45	123AP
2006431-46	123AP
2006431-49	123AP
2006431-50	109
2006436-35	186
2006436-36	186
2006436-37	129
2006436-38	116
2006436-40	128
2006436-89	116
2006441-91	116
2006441-113	102A
2006441-122	109
2006441-123	614
2006441-132	177
2006463-89	116
2006512-40	116
2006512-79	113A
2006512-80	113A
2006513-19	108
2006513-39	107
2006513-133	158
2006514-59	131
2006514-60	123AP
2006514-61	195A
2006582	116
2006582-20	109
2006582-21	125
2006582-22	116
2006582-23	116
2006582-24	116
2006582-25	123AP
2006582-101	161
2006607-59	121
2006607-60	123AP
2006607-61	195A
2006607-62	237
2006607-63	138A
2006613-77	123AP
2006623-47	132
2006623-48	177
2006623-49	116
2006623-88	184
2006623-128	195A
2006623-145	123AP
2006623-148	128
2006627-54	177
2006681-93	107
2006681-94	107
2006681-95	107
2006681-96	123AP
2006681-97	614
2006681-120	158
2008292-56	107
2008292-87	126
2008292-88	177
2008292-89	116
2008293-109	102
2008293-111	158
2008299-1	107
2008299-2	109
2008299-3	116
2008300-105	1003
2008302-41	116
2010088-49	123AP
2010494-3	161
2010494-4	123AP
2010499-52	123AP
2010952-14	103A
2010957-49	116
2010967-82	614
2010967-83	177
2010967-84	136A
2013019-117	116
2014400	519
2041614	123AP
2047102	102
2056606-0701	159
2057013-0004	159
2057013-0007	159
2057013-0008	159
2057013-0012	159
2057013-0701	159
2057013-0702	159
2057013-0703	159
2057062-0702	116
2057199-0700	130
2057199-070BA	130
2057199-0701	130
2057199-701	130
2057323-0500	130
2057323-0501	130
2060041	116
2068491-704	221
2068510-0701	9936
2068510-0702	9946
2068510-0703	9962
2068510-0704	9093
2068510-0705	9099
2076393	126
2076403	160
2076403-0703	160
2076945-0701	102A
2090056-1	104
2090056-5	104
2090056-27	104
2090924-0008	102A
2090924-008	102A
2090924-6	102A
2090924-8	102A
2090924-8A	102A
2090924B	102A
2091211-0014	100
2091214-0005	160
2091217-0014	160
2091241-0005	160
2091241-005	126
2091241-0013	100
2091241-0014	100
2091241-0015	100

PART NUMBER	NTE REPLACEMENT
2091241-0018	102A
2091241-0719	126
2091241-1	100
2091241-2	100
2091241-3	100
2091241-4	100
2091241-5	126
2091241-5A	126
2091241-6	100
2091241-7	100
2091241-8	100
2091241-9	102A
2091241-10	100
2091241-11	100
2091241-12	100
2091241-13	100
2091241-13A	100
2091241-14	100
2091241-15	100
2091241-15A	100
2091247-005	160
2091260	103
2091260-1	103
2091260-1(NPN)	103A
2091260-1(PNP)	102A
2091260-2	103
2091260-2(NPN)	103A
2091260-2(PNP)	102A
2091260-3	103
2091260-3(NPN)	103A
2091260-3(PNP)	102A
2091578-0702	102A
2091578-1	102A
2091858-0712	121
2091858-0715	123AP
2091858-11	121
2091859-0008	104
2091859-0011	121
2091859-0025	104
2091859-0720	104
2091859-0711	108
2091859-0712	121
2091859-0713	121
2091859-0714	121
2091859-0715	121
2091859-0716	121
2091859-0717	121
2091859-0718	121
2091859-0723	121
2091859-2	104
2091859-4	104
2091859-6	121
2091859-8	121
2091859-9	121
2091859-10	104
2091859-11	104
2091859-16	121
2091859-25	121
2091959-16	121
2092055-0001	109
2092055-0002	5072A
2092055-0003	614
2092055-0004	5069A
2092055-0005	138A
2092055-0007	110MP
2092055-0010	109
2092055-001	109
2092055-0016	136A
2092055-0017	5072A
2092055-0018	5071A
2092055-0024	5082A
2092055-0027	5072A
2092055-0708	112
2092055-0710	5071A
2092055-0711	109
2092055-0712	5072A
2092055-0713	109
2092055-0714	123AP
2092055-0714(DIODE)	177
2092055-1	109
2092055-3	614
2092055-4	5069A
2092055-5	138A
2092055-7	109
2092117-0018	107
2092405-7	109
2092417-005	160
2092417-0017	107
2092417-0018	107
2092417-0019	107
2092417-0704	160
2092417-0707	160
2092417-0708	160
2092417-0709	160
2092417-0710	160
2092417-0720	123AP
2092417-0711	161
2092417-0712	161
2092417-0713	161
2092417-0714	161
2092417-0715	161
2092417-0716	161
2092417-0717	160
2092417-0719	123AP
2092417-0721	123AP
2092417-0724	123AP
2092417-0725	123AP
2092417-1	160
2092417-2	160
2092417-3	160
2092417-4	160
2092417-5	160
2092417-6	160
2092417-7	160
2092417-8	160
2092417-9	160
2092417-17	123AP
2092417-18	123AP
2092417-19	123AP
2092418-0022	161
2092418-0023	161
2092418-0024	161
2092418-0708	160
2092418-0710	160
2092418-0720	161
2092418-071	160
2092418-0711	101
2092418-0712	160
2092418-0715	108
2092418-0716	161
2092418-0717	161
2092418-0718	161
2092418-0719	161
2092418-0721	161
2092418-0724	108
2092418-1	160
2092418-2	160
2092418-5	160
2092418-6	160
2092418-7	160
2092418-8	160
2092418-10	160
2092418-11	160
2092605-0705	123AP
2092608-22	123AP
2092609	123AP
2092609-0001	123AP
2092609-0002	123AP
2092609-001	123AP
2092609-0022	123AP
2092609-0023	123AP
2092609-0024	123AP
2092609-0025	159
2092609-0026	123AP
2092609-0027	123AP
2092609-0028	123AP
2092609-0705	123AP
2092609-0706	123AP
2092609-0707	123AP
2092609-0720	123AP
2092609-0713	123AP
2092609-0715	123AP
2092609-0718	123AP
2092609-0721	123AP
2092609-1	123AP
2092609-2	123AP
2092609-3	123AP
2092609-5	123AP
2092693-0724	107
2092693-0725	107
2092693-0734	159
2092693-1	102A
2092693-2	160
2092693-3	160
2092693-4	160
2092693-8	102A
2092693-9	160
2093308-0700	108
2093308-070	108
2093308-0701	123AP
2093308-0702	123AP
2093308-0703	123AP
2093308-0704	107
2093308-0704A	108
2093308-0705	107
2093308-0705A	108
2093308-0706	107
2093308-0706A	108
2093308-0708	123AP
2093308-0725	107
2093308-1	108
2093308-2	108
2093308-3	108
2093308-8708	123AP
2095083	109
2096700	129
2096700-TM18	129
2097013-0702	128
2121544	85
2125310	199
2132523-1	159
2132524-1	519
2132763-1	912
2146516	113A
2160153	725
2182124-1	519
2185494-1	519
2185494-2	519
2201034	152
2201035	152
2201073	152
2201074	152
2201075	152
2206582-22	116
2210746	85
2210803	290A
2211255	85
2211256	85
2211342	85
2211423	298
2211424	298
2211455	290A
2211722	229
2211723	229
2211815	459
2211845	229
2227367	176
2230352	519
2231154	5021A
2243255-1	102A
2295361	9962
2311598	506
2312371	376
2314009	127
2314381	383
2314391	382
2316177	107
2316183	161
2319990	1128
2320011	102A
2320022	123AP
2320031	107
2320041	233
2320041H	161
2320042	107
2320043	107
2320051	154
2320051(BRADFORD)	171
2320051H	154
2320052	128
2320062	108
2320063	108
2320073	108
2320083	152
2320084	175
2320092	131
2320111	123AP
2320123	123AP
2320141	161
2320141H	161
2320143	107
2320154	100
2320161	159
2320161(RCA)	160
2320162	159
2320191	154
2320201	127
2320221	124
2320222	124
2320223	124
2320228	124
2320233	128
2320242	129
2320243	129
2320261	102A
2320271	162
2320273	162
2320281	164
2320291	165
2320299	165
2320302	102A
2320302H	102A
2320331	103A
2320413	123AP
2320422	158
2320422-1	102A
2320423	102A
2320432	152
2320441	123AP
2320471	319P
2320471(LAST IF)	233
2320471-1	107
2320471H	107
2320482	152
2320482H	152
2320483	152
2320485	152
2320486	152
2320492	102A
2320512	100
2320513	102A
2320514	160
2320514-1	100
2320515	102A
2320541	121
2320563	107
2320591	85
2320591-1	123AP
2320593	85
2320595	85
2320596	85
2320598	85
2320602	152
2320631	290A
2320632	193
2320635	290A
2320637	290A
2320643	289A
2320644	289A
2320646	289
2320646-1	289
2320647	289A
2320647-1	289
2320651	152
2320652	152
2320663	289A
2320664	192
2320671	159
2320681	290A
2320682	290A
2320696	123AP
2320696-1	123AP
2320833	127
2320843	184
2320845	373
2320846	186A
2320855	185
2320884	153
2320892	154
2320931	124
2320946	128
2320961	165
2320963	165
2320981	107
2320994	198
2321001	124
2321095	198
2321101	154
2321111	288
2321112	288
2321121	283
2321154	5021A
2321211	198
2321221	376
2321241	283
2321264	5455
2321281	153
2321291	124
2321302	152
2321306	375
2321321	234
2321323	234
2321351	234
2321372	162
2321381	292
2321403	124
2321412	198
2321433	291
2321438	375
2321472	376
2321511	108
2321521	288
2321522	288
2321541	123AP
2321561	165
2321563	389
2321581	384
2321591	375
2321621	85
2321647	289A
2321652	280
2321693	375
2321732	196
2321763	292
2321803	451
2321831	85
2321871	315
2321881	293
2321882	293
2321891	294
2321893	294
2321982	293
2321984	293
2321991	287
2321992	399
2321993	399
2322163	5465
2322191	85
2322223	379
2322561	157
2322562	157
2322851	89
2323021	89
2323102	199
2323112	375
2323114	375
2323123	291
2323351	17
2323411	375
2323432	56
2323434	56
2323521	315
2323522	315
2323541	376
2324082	459
2324084	459
2324171	373
2324292	377
2324322	399
2324411	2302
2324412	2302
2324414	2302
2324471	375
2325702	290A
2325725	85
2326022	85
2326214	373
2326216	373
2326218	373
2326611	157
2326661	157
2326953	123AP
2326991	124
2327022	128
2327023	123AP
2327031	116
2327041	116
2327052	130
2327053	130
2327061	124
2327071	142A
2327073	5081A
2327074	5022A
2327075	5084A
2327076	147A
2327077	5075A
2327078	5074A
2327111	222
2327122	123AP
2327132	132
2327142	132
2327142(JFET)	312
2327142(MOSFET)	222
2327152	186
2327153	186
2327172	130
2327182	124
2327203	186
2327206	152
2327212	703
2327232	222
2327262	159
2327282	129
2327283	129
2327292	128
2327293	128
2327302	703
2327312	1039
2327332	128
2327333	289A
2327363	123AP
2327387	159
2327403	128
2327411	1041
2327431	222
2327443	199
2327453	290A
2327501	2331
2327504	2331
2327505	2302
2327751	2362
2327844	2324
2327893	91
2327913	90
2327923	90
2327931	5457
2328031	506
2328282	85
2328422	375
2328622	383
2328625	383
2328632	382
2328635	382
2328642	290A
2328651	85
2328652	85
2328653	85
2328802	312
2328803	312
2328861	91
2328862	91
2328871	90
2328872	90
2328964	197
2328973	152
2328974	196
2329073	197
2329083	196
2329161	92
2329171	93
2329183	290A
2330011	166
2330011H	166
2330021	138A
2330032	505
2330033	503
2330034	504
2330101	506
2330191	506
2330201	116
2330211	506
2330235	125
2330241	142A
2330251	116
2330251(POWER)	156
2330251H	116
2330252	116
2330253	125
2330256	552
2330302	5071A
2330302H	138A
2330305	144A
2330307	5072A
2330332	156
2330341	113A
2330351	519
2330352	519
2330353	519
2330356	506
2330361	166
2330362	116
2330381	504
2330533	552
2330551	552
2330553	552
2330561	116
2330562	116
2330564	552
2330611	116
2330612	116
2330631	5014A
2330632	5071A
2330633	5015A
2330634	5014A
2330643	5071A
2330721	580
2330752	174
2330771	156
2330773	116
2330791	5071A
2331001	5011T1
2331084	615P
2331121	506
2331141	116
2331142	116
2331152	142A
2331154	5021A
2331155	5021A
2331161	5020A
2331165	5020A
2331171	5019A
2331172	5019T1
2331173	5020A
2331174	5074A
2331201	116
2331351	519
2331381	506
2331481	116
2331491	5069A
2331495	5011A
2331497	5013A
2331502	156
2331541	5002A
2331582	5031A
2331781	5006A
2331782	5006A
2331785	5007A
2331797	5010T1
2331799	5010T1
2331802	5011A
2331804	5011T1
2331805	136A
2331806	5012A
2331807	5012A
2331809	5013T1
2331815	5014A
2331817	5015A
2331819	5015A
2331821	5016A
2331823	5016A
2331826	5017A
2331827	5018A
2331829	5018A
2331831	5020A
2331834	5019A
2331841	5021T1
2331842	5021T1
2331843	5021A
2331844	5021T1
2331845	5022A
2331849	5021T1
2331857	5006A
2331859	5008A
2331902	519
2331912	552
2331913	177
2331941	506
2331991	125
2332141	552
2332142	552
2332152	558
2332221	5013A
2332242	552
2332251	552
2332483	5002A
2332501	5037A
2332751	5014A
2332781	5010A
2332791	5304(11)
2332792	5305
2332794	5306
2332794(HITACHI)	5305(11)
2332841	5020A
2332851	552
2333003	552
2333011	552
2333101	519
2333173	109
2333201	552
2333231	125
2333855	5031A
2334052	5002A
2334061	5004A
2334122	5010A
2334142	5013A
2334243	5025A
2334282	5031A
2334283	5031A
2334303	5035A
2334305	5035A
2334312	5035A
2334581	551
2334592	116
2334881	519
2335042	5030A
2335181	5029A
2335182	5029A
2335461	5031A
2335982	580
2335991	615
2336291	552
2336612	580
2337011	177
2337063	5080A
2337065	5075A
2337071	116
2337101	142A
2337103	5021A
2337121	5011T1
2337122	5070A
2337151	519
2337184	5025A
2337185	5032A
2337186	5035A
2337188	5031A
2337292	5017A
2337341	5313
2337411	3022
2337431	5004A
2337461	5313
2337483	143A
2337502	3024
2337515	5011T1
2337519	5013T1
2337529	5018A
2337531	5023A
2337532	5024A
2337541	5014A
2337545	5014A
2337564	5022A
2337587	5010T1
2337601	519
2337641	177
2337751	3022
2337752	3022
2337761	116
2337787	145A
2337811	3024
2337812	3024
2337893	5079A
2337896	5074A
2337921	109
2337922	109
2337932	109
2338161	552
2338162	552
2338211	116
2338321	519
2338653	5033A
2338871	580
2338902	552
2339142	5021T1
2339211	5031A
2339222	5033A
2339223	5032A
2339251	5037A
2339491	116
2339991	5003A
2340283	600
2340331	605A
2340332	605A
2343961	552
2347021	116
2347041	600
2347141	605A
2348391	5332
2348431	587
2360021	1061
2360042	712
2360042(HITACHI)	712
2360092	712
2360141	1004
2360171	1004
2360201	712
2360221	1094
2360231	1121
2360291	1257
2360331	712
2360361	1004
2360391	712
2360401	1004
2360501	712
2360511	1004
2360561	74107
2360741	7400
2360782	1469
2360851	4011B
2360924-5601	123AP
2360951	74LS04
2361251	7406
2361361	4069
2361461	966
2361572	1473
2362051	74LS08
2362301	74LS32
2362605	778A
2363191	4066B
2363261	712
2364131	1546
2364172	1522
2364181	1471
2364401	966
2365021	1668
2365061	1650
2365062	1650
2365411	834
2365452	943M
2366151	1004
2366201	15012
2366392	1780
2366591	1232
2366621	1658
2366721	1678
2367691	4001B
2367831	4081B
2367941	7407
2368282	1656
2368501	1676
2368791	4028B
2368801	4035B
2369151	1589
2370873	15019
2380426	966
2390022	5404
2391342	910
2391773	909
2392152	941M
2396475	923
2398611	519
2412949-0001	129
2469749	123AP
2469755	123AP
2469936-1	128
2472222	123AP
2479692	123AP
2479836	123AP
2485076-2	128
2485076-3	128

PART NUMBER	NTE REPLACEMENT
2485077-2	128
2485077-3	128
2485078-1	123AP
2485078-2	123AP
2485078-2(PENNCREST)	123AP
2485078-2(SEARS)	123AP
2485078-3	123AP
2485079-1	123AP
2485079-2	123AP
2485079-3	123AP
2485080	177
2485080(DIODE)	109
2486836	116
2487305	117
2487340	159
2487341	159
2487424	192
2487424(NPN)	192
2487424(PNP)	159
2495012	126
2495013	126
2495014	102A
2495078	160
2495079	160
2495080	102A
2495082	160
2495083	110MP
2495083-2	109
2495084	109
2495166-1	108
2495166-2	123AP
2495166-4	123AP
2495166-8	123AP
2495166-9	123AP
2495200	126
2495376	160
2495377	160
2495378	126
2495379	126
2495380	109
2495383	109
2495388	102A
2495388-1	102A
2495388-2	102A
2495488-1	126
2495488-2	126
2495520	161
2495521	161
2495521-1	123AP
2495522-1	161
2495522-4	123AP
2495523-1	161
2495529	109
2495529(ARVIN)	128
2495529(DIODE)	109
2495567-2	102A
2495567-3	102A
2495568	158
2495568-2	102A
2496125-2	123AP
2496436	109
2497094-1	161
2497094-2	161
2497473	102A
2497473-1	102A
2497496	102A
2497888	158
2498163	128
2498456-2	107
2498457-2	123AP
2498482-2	107
2498507-1	108
2498507-2	108
2498507-3	108
2498508-2	107
2498508-3	107
2498512	159
2498513	116
2498530	109
2498665-1	199
2498665-2	199
2498665-3	199
2498837	160
2498837-4	102A
2498902-1	107
2498902-2	107
2498903-1	107
2498903-2	229
2498903-3	107
2498904-3	123AP
2498904-4	123AP
2498904-6	123AP
2499048	614
2499950	199
2500389-432	9932
2500389-444	9944
2500390-435	9935
2500390-436	9936
2500390-437	9937
2500390-449	9949
2500390-461	9961
2500390-462	9962
2500391-445	9945
2500747	9932
2501337-433	9933
2501549-341	703
2501557-430	9930
2501557-436	9936
2501557-437	9937
2501557-446	9946
2501557-449	9949
2501557-461	9961
2501557-462	9962
2503134-105	159
2505207	199
2505209	123AP
2509319	124
2520063	123AP
2521108-1	159
2530733	123AP
2545989-2	128
2546059	519
2546220-1	910
2552007	156
2596071	108
2604688-3	909
2605022	128
2608169-1	128
2610023-01	910
2610023-02	910
2610032	177
2610043-03	941M
2610153	725
2610154-01	923
2610783	7402
2610784	7496
2610786	7400
2610788	74121
2621499-1	177
2621567-1	123AP
2621570	159
2621764	123AP
2621786-1	519
2621811	106
2622284	123AP
2635012	177
2640830-1	123
2640843-1	123AP
2642309	5018A
2652613	9944
2652614	9945
2656211-1	9930
2656212	9946
2656212-1	9946
2656213	9944
2656213-1	9944
2656214	9945
2656214-1	9945
2656747	9944
2656748	9946
2666293	7482
2666294-1	7483
2666307-1	128
2709759	309K
2710002	941
2712080	123AP
2729789	176
2760438-1	177
2777301	128
2797658-616030A	941
2808577	9932
2811925-002	125
2811975-1	454
2855296-01	102A
2865101	192
2865141	519
2868536-1	7474
2870406-1	614
2870486-1	5140A
2871185-1	112
2875493	152
2887425RB	311
2898431-2	9946
2899000-00	9946
2899001-00	9962
2899002-00	9930
2899003-00	9936
2899004-00	9945
2899018	911
2899414	923D
2902798-2	915
2903993-1	159
2903993-I	159
2904014	121
2910011	1845
2910012	15015
2910021	15002
2911481	1744
2911501	1217
2912175	1778
2912177	1777
2912561	1798
2913891	3041
2913981	1782
2914931	15007
2914941	15023
2914961	7007
2917601	1799
2917611	1781
2928054-1	128
2970038H05	100
3004856	102A
3005300	5882
3005861	123AP
3006206-00	784
3006892-00	910
3006892-01	910D
3007359-00	9937
3007359-01	9949
3007359-02	9963
3007359-03	9932
3007472-00	9945
3007473-00	9932
3007473-01	9932
3007474-00	9930
3007474-01	9930
3007475-00	9962
3007475-01	9962
3007476-00	9946
3007476-01	9946
3007477-00	9936
3007477-01	9936
3007572-00	9933
3007573-00	9093
3007579	912
3007579-00	912
3007604-00	9135
3007680-00	941
3007680-01	941D
3008321-00	309K
3008340	923D
3020111	107
3034725-1	903
3068305-2	123AP
3100001	923D
3100002	992
3100004	960
3100017	145A
3100021	5080A
3100026	5085A
3102006	74LS00
3102007	74LS02
3102008	74LS04
3102009	74LS05
3102010	74LS11
3102011	74LS20
3102013	74LS30
3102014	74LS32
3102015	74LS74A
3102016	74LS92
3102017	74LS93
3102018	74LS132
3102019	74LS153
3102020	74LS157
3102021	74LS166
3102022	74LS174
3102023	74LS175
3102024	74LS367
3102025	74LS368
3102026	74C00
3102027	74C04
3102028	74LS156
3106002	75452B
3108002	2102
3108009	2117
3110001	3880
3110883-P01	177
3130006	121
3130011	102
3130025	102
3130053	128
3130057	175
3130058	130
3130060	102
3130090	181
3130091	130
3130092	128
3130093	175
3130104	181
3130109	121
3142569	552
3146977	130
3146977A	130
3152159	175
3152170	130
3152170A	130
3160000-00-08A	519
3170717	154
3170757	154
3172626	9933
3172627-2	9949
3172629-1	9930
3172629-2	9961
3172630	9944
3172631	9948
3172632-1	9962
3172638	9950
3176135-1	9936
3176135-2	9937
3177200	9932
3180006	519
3181947	6094
3181972	108
3195638	177
3201104-10	123AP
3235900	2061
3236824	2060
3263029-10	519
3265869	2708
3265889	2716
3267390-01	74H40
3311133	519
3403787	123AP
3403866-3	128
3404114-1	102
3404114-2	102
3404520-81	126
3404520-301	128
3404520-601	221
3405081-0017	519
3406519-31	726
3406519-31(RCA)	726
3412004-1912	133
3412907-1	128
3412951	904
3412986-1	903
3430063	116
3430063-1	5804
3430063-I	5804
3438095	152
3438854	163A
3438867	152
3438869	6402
3438873	5105A
3450842-10	154
3450842-20	154
3450842-30	154
3457107-1	123AP
3457632-5	123AP
3457633-1	128
3457633-2	128
3457697-1	726
3457936-1	234
3457964-1	325
3457964-2	325
3457964-3	325
3457964-4	325
3458267-1	128
3458573-1	192
3459332-1	161
3460550-1	160
3460550-3	160
3460550-4	160
3460553-2	121
3460553-4	121
3460679-1	102A
3460758-2	5801
3462221-1	121
3462306-1	121
3463098-1	5870
3463098-2	5871
3463099-1	128
3463100-1	175
3463101-1	130
3463604-1	175
3463604-2	175
3463609-2	161
3464482-1	102A
3464611	519
3468068-1	161
3468068-2	161
3468068-3	161
3468068-4	161
3468071-1	175
3468182-1	123AP
3468182-2	123AP
3468183-1	159
3468242-1	159
3468242-2	123AP
3468841-1	175
3520025-001	9936
3520041-001	7400
3520042-001	7410
3520043-001	7473
3520044-001	7440
3520045-001	7451
3520046-001	7474
3520047-001	7430
3520048-001	7404
3520050-001	7472
3539307-001	161
3539307-002	161
3596061	177
3596062	109
3596063	159
3596067	108
3596068	108
3596069	108
3596070	108
3596071	108
3596072	108
3596091	196
3596092	196
3596100	197
3596101	197
3596116	128
3596117	123AP
3596118	159
3596128	159
3596186	5016A
3596187	4045B
3596242	614
3596260	108
3596261	108
3596338	123AP
3596339	123AP
3596340	129
3596341	129
3596353	736
3596354	723
3596398	5014A
3596401	454
3596402	454
3596435	5077A
3596440	107
3596446	152
3596447	152
3596448	152
3596449	152
3596451	153
3596452	153
3596453	153
3596453(ZENER)	151A
3596454	153
3596454(ZENER)	151A
3596558	5023A
3596559	519
3596562	116
3596570	123AP
3596634	5018A
3596721	116
3596803	1115
3596808	726
3596809	789
3596810	788
3596914	519
3597049	1115
3597090	116
3597103	108
3597104	108
3597114	123AP
3597149	5014A
3597260	108
3597261	108
3597379	6402
3597526	5103A
3597553	142A
3597632	5081A
3597730	987
3597761	5068A
3597762	5072A
3597763	142A
3598070	123AP
3598161	5072A
3598236	5010A
3598244	5075A
3598374	135A
3598444	1288
3598485	1232
3598519	1232
3598520	1232
3598570	5096A
3598604	40106B
3598610	834
3598616	5074A
3598713	138A
3598857	4025B
3598858	987
3598859	139A
3598863	5071A
3598960	142A
3598961	5086A
3598963	138A
3599012	5075A
3599095	5072A
3599096	5137A
3599292	5066A
3599483	145A
3599658	142A
3599684	2004
3599685	2003
3599712	4013B
3599713	4082B
3599716	140A
3599779	1232
3599992	5019A
3600246	5033A
3600249	142A
3600257	5009A
3600263	5066A
3600568	136A
3600570	5011A
3600822	5081A
3650238A	159
3656173	5014A
3656198	116
3656465	6402
3670724H	123AP
3671857E	198
3673351K	289
3673354G	289
3680322-3	5992
3700072	123AP
3700085	121
3700103	1047
3700109	123AP
3700135	130
3700144	159
3700162	128
3700163	129
3700164	130
3700171	123AP
3700219	130
3700228	130
3700249	159
3700258	129
3700279	123AP
3720923-1	320
3720923-2	320
3720923-3	320
3720923-4	320
3720968-1	923
3731132-1	123
3731133-1	159
3731313-1	121
3731418-1	129
3731418-2	128
3731418-3	129
3731418-4	129
3755171	152
3755808	5400
3755809	5400
3755862	199
3755864	177
3755931	6402
3838158	133
3838159	326
3838170	923D
3838173	177
3838174	519
3838176	5304
3840312	4042B
3840313	4016B
3840315	4049
3840317	4011B
3840318	4086B
3840319	2012
3840321	4527B
3840323	4514B
3840324	74154
3840325	4018B
3840326	7401
3840328	4027B
3840329	6800
3840330	7406
3840331	7404
3840334	7420
3840335	7400
3840339	8374
3840357	1916
3840359	931
3840426	4050B
3840489	74LS00
3840490	74LS01
3840491	74LS26
3840497	7407
3841015	74LS04
3841022	74LS08
3841023	74LS10
3841024	74LS11
3841025	74LS14
3841026	7417
3841027	74LS20
3841028	74LS21
3841029	74LS27
3841030	74LS30
3841031	74LS37
3841032	74LS42
3841033	74LS74A
3841034	74LS75
3841035	74LS90
3841036	74LS107
3841039	74LS151
3841040	74LS86
3841041	74LS161A
3841044	74LS175
3841045	6887
3841046	6888
3841047	778A
3841055	74LS132
3841061	2013
3841184	74LS157
3841195	3041
3841202	4024B
3841311	2716
3841427	74LS221
3841504	778A
3841556	834
3841563	5194A
3841564	5882
3841853	5131A
3841915	6821
3842511	5014A
3874434	5124A
3874441	834
3874442	987
3874446	4516B
3874820	5018A
3939307-002	161
4000022	605A
4000921	199
4002862-0001	123AP
4010577-0701	519
4017621-0701	123AP
4028839	161
4031986-0701	159
4036392-P2	140A
4036598-P1	121
4036598-P2	102A
4036612-P1	100
4036612-P2	100
4036707-P1	100
4036707-P2	100
4036715-P1	160
4036715-P2	160
4036733-P1	121
4036749-P1	101
4036749-P2	101
4036754-P1	103
4036754-P2	103
4036831-P1	105
4036832-P1	105
4036887-P8	123AP
4036923-P1	160
4036923-P2	160
4036924-P1	123AP
4036924-P2	123AP
4036937-P1	100
4036937-P2	100
4036962-P1	160
4036962-P2	160
4036963-P1	160
4036963-P2	160
4036965-P1	160
4036965-P2	160
4037145-P1	102A
4037145-P2	102A
4037289-P1	101
4037289-P2	101
4037325-P1	116
4037410-P1	160
4037410-P2	160
4037413-P1	137A
4037586-P1	519
4037586-P2	123AP
4037594-P1	121
4037607-P1	121
4037647-P1	186
4037647-P2	186
4037764-P1	160
4037764-P2	160
4037800-P1	123AP
4037800-P2	123AP
4037804-P1	102A
4037804-P2	102A
4037839-P1	101
4037839-P2	101
4037993-P1	100
4037993-P2	100
4037993P1	158
4038256-P1	103A
4038256-P2	103A
4038260-P1	100
4038260-P2	100
4038264-P1	101
4038264-P2	101
4038359-P1	160
4038359-P2	160
4038406-P1	160
4038406-P2	160
4041200-30110	177
4041200-40100	109
4048122	519
4048586	116
4048702	5804
4048708	116
4048723	109
4048728	74LS373
4048730	4584B
4048998	5145A
4080187-0502	152
4080187-0504	130
4080187-0506	196
4080187-0507	196
4080320-050B	130
4080320-0501	130
4080320-0504	130
4080627-0501	175
4080835-0002	196
4080838-0001	175
4080838-0002	175
4080838-002	196
4080838-2	175
4080838-3	175
4080865-0012	184
4080866-000A	130
4080866-0001(METAL)	130
4080866-0002(METAL)	130
4080866-0006	186
4080866-0006(METAL)	130
4080866-0006(PLASTI	152
4080866-0006(PLASTIC	152
4080866-0007	175
4080866-003	152
4080866-006	152
4080866-009	152
4080866-0012	196
4080866-0013	152
4080866-1	175
4080866-2	175
4080866-4	152
4080866-8006	130
4080873-0001	184
4080879-0001	152
4080879-0006	196
4080879-0011	196
4080879-0015	175
4082501-0001	104MP
4082501-0001A	121
4082501-001	104
4082626-0001	912
4082664-0001	726
4082665	723
4082665-0001	723
4082665-0002	723
4082665-0003	723
4082665-1	723
4082665-2	723
4082665-3	726
4082671-0002	172A
4082748-0002	136A
4082799-0001	789
4082799-0002	789
4082799-1	789
4082799-2	789
4082873-0001	197
4082886-0002	184
4082886-001	130
4082886-002	130
4082886-3	130
4084114-0001	222
4084114-0002	222
4084117-0001	949
4084117-0002	949
4089549-0001	949
4089549-001	949
4090187-0502	130MP
4091317	928M
4091319	975
4091346	975
4091369	5020A
4091483	987
4091883	5021A
4101685	116
4111131	5075A
4111360	5038A
4111362	4516B
4111558	943M
4111608	5025A
4111644	5010A
4111675	5008A
4111837	5034A
4111872	5116A
4145159	4011B
4145332	5000A
4145333	5015A
4145595	4934
4145758	5010A

PART NUMBER	NTE REPLACEMENT
4145857	5022A
4222002	580
4222010	74C74
4350052-1	703
4361620	130
4420022-P1	5995
4420022-P2	5995
4450023	130
4450023-007	130
4450023-P3	130
4450023-P4	130
4450023-P6	130
4450023P5	130
4450026-P5	128
4450028-P1	5547
4450028-P2	5547
4450028P4	5547
4450300-1	5675
4450303-001	5642
4450303-002	5642
4511424	7432
4550106-001	152
4550106-003	152
4663001A905	7474
4663001A909	7404
4663001A911	7440
4663001A912	7410
4663001A915	7430
4663001D907	7400
4686309-3	519
4800002	519
4800021	137A
4800022	5010A
4800023	167
4800026	5046A
4813466	123AP
4820004	291
4822001	123AP
4822003	159
4822354	130
4822354J	130
4824002	153
4824003	219
4832800	181
4890135A55	116
4890210A03	377
4890210A12	5020A
4890210A13	5006A
4890210A14	399
4890210A16	91
4890210A17	54
4890210A18	293
4890210A19	552
4890210A20	116
4890210A21	5010A
4890210A23	5020A
4890210A24	5019A
4890210A25	519
4890210A26	519
4890210A28	5014A
4890210A29	5011A
4890210A30	5020A
4890210A31	377
4890210A32	5013A
4890210A53	290A
4890210A54	54
4890210A55	552
4890210A56	552
4890210A57	5010A
4890210A59	5019A
4890210A61	293
4890210A62	18
4890210A76	5013A
4890223A61	377
4890223A62	261
4890223A63	89
4890223A64	552
4890223A65	552
4890223A66	5036A
4890223A67	5012A
4890223A68	5424
4890223A88	140A
4890223A89	116
4890223A90	5019T1
4890223A92	125
4890223A93	2302
4890223A94	19
4890223A95	16
4890223A96	107
4890223A97	399
4890223A98	399
4890223A99	5004A
4890229A49(12)	519
4890229A51	552
4890229A53	157
4890229A59	5004A
4890229A86	552
4890232A40	85
4890232A67	519
4890232A78	552
4890232A94	125
4890232A99	399
4890233A27	198
4890233A53	109
4890233A67	5012A
4890233A97	5033A
4890234A30	85
4890234A31	289A
4890234A83	290A
4890235A09	605A
4890235A14	552
4890235A24	552
4890235A25	552
4890235A52	19
4890235A53	198
4890235A54	54
4890235A55	116
4890235A56	116
4890235A57	142A
4890235A58	5038A
4890235A59	5016A
4890235A60	558
4890235A61	89
4890235A62	116
4890235A71	140A
4890235A89	290A
4890237A60	152
4890237A62	125
4890237A80	293
4890237AB0	293
4890343A49	289A
4890343A81	293
4890420A01	16
4890420A29	19
4890420A42	19
4890420A83	383
4890420A84	375
4890420A85	116
4890420A86	552
4890420A87	552
4890432A02	373
4890432A06	290A
4890432A15	116
4890432A42	5004A
4890432A55	19
4890432A56	19
4890445A09	15
4890445A17	16
4890445A51	5020A
4890445A52	5020A
4890448A32	552
4890456A24	519
4890456A32	152
4890456A85	5018A
4890478A30	5010A
4890478A47	19
4890478A51	373
4890478A52	16
4890478A69	18
4890478A83	290A
4890488A01	519
4890488A19	18
4890488A32	552
4890488A66	389
4890488A67	125
4890488A68	5020A
4890488A77	605A
4890543A15	506
4890549A22	552
4890549A99	5015A
4890562A02	116
4890562A04	109
4890562A29	125
4891448A32	552
4906071	123AP
4906072	123AP
4906073	123AP
4906093	199
4907976	102A
4915702	7416
4915705	7411
4980235A56	5010A
4999774	121
4999885	213
4999887	102A
5001266-3	177
5049911	128
5073004	102A
5076054	177
5076204	74S00
5076205BZ	74S20
5113642	909
5113753A23	1415
5113753A37	1682
5113753A67	1373
5165440	9936
5171000	9094
5175460	7408
5190266A68	15013
5190458A07	834
5190480A96	1674
5190507A20	1234
5190507A39	928M
5190507A40	928M
5190507A46	1689
5190507A60	1630
5190507A87	1628
5190528A01	928M
5190528A27	1747
5190528A28	1683
5190528A29	966
5190528A41	15019
5190528A43	1783
5190528A53	1688
5190528A55	1811
5190528A56	1812
5190528A57	1813
5190528A58	1828
5190528A59	1829
5190528A61	15030
5190528A64	15005
5190538A18	4027B
5190538A20	1779
5190538A22	966
5190538A98	1789
5190538AC	1779
5190555A50	15029
5190555A60	4053B
5206371	5086A
5294477-1	123AP
5294477-2	123AP
5300073-15	145A
5300113-1	116
5301710-001	116
5320003	175
5320004	289
5320011	102A
5320022	289
5320023	123AP
5320023H	123AP
5320024	123AP
5320026	123AP
5320031	220
5320032	132
5320042H	159
5320043H	159
5320051	161
5320064	289
5320064H	123AP
5320067	123AP
5320069	85
5320074	123AP
5320101	102A
5320111	129
5320141	102A
5320151	237
5320241	123AP
5320295	102A
5320295H	103A
5320296	102A
5320305	103A
5320305H	102A
5320306	103A
5320326	123AP
5320326H	107
5320328	108
5320361	103A
5320372	123AP
5320372H	123AP
5320373	123AP
5320386	103
5320422H	152
5320432	152
5320433	152
5320475	103A
5320485	102A
5320492H	152
5320501	195A
5320511	237
5320583	133
5320592	290
5320593	290A
5320612	128
5320613	289
5320622	192
5320632	187
5320642	186
5320643	184
5320651	123AP
5320671	152
5320702	132
5320723	185
5320731	109
5320772	229
5320791	235
5320813	199
5320851	123AP
5320861	107
5320872	102A
5320921	184
5320942	312
5320943	312
5321184	159
5321204	294
5321213	293
5321214	287
5321235	186A
5321251	234
5321252	129
5321253	129
5321255	234
5321261	123AP
5321281	85
5321282	85
5321291	123AP
5321301	152
5321311	295
5321321	235
5321422	312
5321431	108
5321501	133
5321502	133
5321663	16
5321901	108
5321941	312
5322733	290A
5323071	253
5323561	2357
5323562	2358
5323903	85
5324051	459
5327021	290A
5327031	290A
5330001	116
5330011	139A
5330012	139A
5330031	116
5330041	116
5330041(HR-5A)	125
5330041H	116
5330042	116
5330051	5071A
5330054	5022A
5330054H	5022A
5330101	116
5330101H	116
5330102	116
5330102H	116
5330104	125
5330104H	116
5330131	177
5330132	519
5330133	519
5330135	177
5330201	614
5330212H	177
5330261	177
5330261H	177
5330312	5071A
5330315	5015A
5330322	139A
5330325	5016A
5330331	109
5330332	109
5330334	177
5330335	109
5330336	116
5330341	116
5330371	116
5330372	116
5330381	116
5330392	501I1T
5330431	116
5330521	614
5330532	5021A
5330541	5024A
5330542	5024A
5330551	5019A
5330571	519
5330572	519
5330573	519
5330574	519
5330601	142A
5330661	613
5330712	5004A
5330714	5008A
5330721	109
5330731	109
5330732	109
5330761	519
5330822	116
5330842	135A
5330852	614
5331001	177
5331017	501I01
5331051	109
5331052	109
5331091	143A
5331102	5312
5331201	116
5331491	5030A
5331502	109
5331511	590
5331591	177
5331592	519
5331931	5312
5332192	116
5332402	185
5332412	184
5339002	177
5339021	177
5340001	177
5340001(TRANS)	123AP
5340001H	177
5340021	116
5340022	116
5340022H	177
5340051	177
5340082	614
5340111	177
5340113	600
5340161	601
5340202	605A
5350121	1029
5350141	1031
5350151	1032
5350152	1032
5350182	1075A
5350211	1043
5350231	1058
5350251	1087
5350611	615P
5350702	1463
5351041	722
5351042	722
5351051	1041
5351061	1072
5351062	1072
5351064	1072
5351073	801
5351172	1217
5351351	712
5351361	1004
5351411	1490
5352631	1558
5353591	1735
5355611	1658
5359031	7400
5359271	7493A
5359281	981
5359522	2061
5362741	4011B
5364201	15005
5364601	977
5369181	778S
5369431	1781
5391032	1705
5406665-P2	102A
5406665-P5	102A
5490307-P2	140A
5490307-P3	142A
5490307-P4	145A
5490415-P4	116
5490459-P1	116
5490459-P2	116
5490459-P3	116
5490459-P4	116
5490804-P1	116
5490804-P2	116
5490804-P3	116
5490804-P4	116
5490804-P5	116
5490804-P6	116
5490810P1	105
5490860P1	105
5491236-P1	109
5491236-P2	109
5491263-P1	109
5491338-P1	135A
5492153-1	105
5492153-P1	105
5492639-P1	103
5492639-P2	103
5492653-P1	101
5492653-P2	101
5492655-P1	101
5492655-P2	101
5492655-P3	101
5492655-P4	101
5492655-P5	101
5492655-P6	101
5492659-P1	101
5492659-P2	101
5493158-1	121
5493158-P1	121
5493159-P1	5874
5493957-P1	160
5493957-P2	160
5493957-P3	160
5493957-P4	160
5493957-P5	160
5493957-P6	160
5494922-P1	116
5494922-P2	116
5494922-P3	116
5494922-P4	116
5494922-P5	116
5494922-P6	116
5494922-P7	116
5494922-P8	116
5495178-P1	5874
5495912-P2	146A
5495922-P1	5874
5495922-P2	5874
5495922-P3	5874
5495923-P1	5545
5496438-P1	146A
5496663-P1	121
5496663P3	104
5496665-P1	102
5496665-P2	102
5496665-P3	102
5496665-P4	102
5496665-P5	102
5496665-P6	102
5496666-P1	102
5496666-P2	102
5496666-P3	102
5496666-P4	102
5496666-P5	102
5496666-P6	102
5496666-P7	102
5496666-P8	102
5496667-P1	102
5496667-P2	102
5496668-P1	105
5496774-P1	102
5496774-P2	102
5496774-P3	102
5496774-P4	102
5496774-P5	102
5496774-P6	102
5496839-P1	102
5496939-P1	121
5496939-P2	121
5496947-P3	146A
5518017	220
5573505-1	519
5573505-2	519
5600101	85
5602116	9601
5729031	105
5760002-009	330
5760002-010	330
5955748	102A
5955749	116
5958539	176
5983945A	105
5985432	105
5988414	105
5988977	105
5989171	105
5989615	105
5989692	105
5989693	105
6088501-3	912
6100301-1	100
6100724-2	100
6101161-1	130
6142190	5883
6207159	1243
6208839	229
6212096	152
6212839	123AP
6212922	108
6218945	123AP
6460006	102
6460037	102
6480000	130
6480001	121
6480004	121
6480006	128
6490001	175
6510053-2	160
6846503	116
6846812	120
6902021H25	152
6902021H26	153
6933243-001	175
6984590	123AP
6984600	123AP
6993400	159
6993630	159
6993650	123AP
7002453	123AP
7011200-02	9933
7011201-02	9949
7011203-02	7475
7011203-03	7475
7011507	123AP
7011507-00	123AP
7011515	129
7012109-01	923D
7012126	177
7012128	9936
7012128-02	9936
7012132	7482
7012133-02	7483
7012142-03	74193
7012157	519
7012166	7402
7012167-02	7490
7012411	129
7020202	159
7020203	153
7023416-00	116
7026011	108
7026012	108
7026013	108
7026014	123AP
7026015	123AP
7026016	123AP
7026018	130
7026019	129
7026020	123AP
7026024	152
7026036	614
7027002	116
7027005	116
7027023	116
7027031	116
7027036	113A
7027038	116
7027039	116
7030105	102A
7043216	116
7043261	116
7070692	116
7071021	123AP
7071031	123AP
7090612	519
7100460	109
7100628	116
7100630	116
7116060	110MP
7121105-01	123AP
7129386-P2	109
7141123-1	177
7200351	614
7200953	116
7201090	5072A
7201212	117
7202782	5072A
7210027-003	102
7210036-001	102
7269847	103A
7274653	121
7276211	100
7276605	105
7277066	103A
7278421	100
7278422	102A
7278423	102A
7279003	105
7279005	105
7279007	105
7279009	105
7279011	105
7279013	105
7279017	105
7279025	105
7279027	105
7279031	105
7279033	105
7279035	105
7279039	104
7279049	104
7279069	179
7279073	105
7279076	105
7279281	176
7279293	105
7279298	105
7279379	100
7279497	116
7279566	105
7279779	126
7279779(GM)	123AP
7279780	160
7279781	160
7279782	100
7279788	100
7279789	100
7279793	105
7279893	109
7279940	100
7279941	102A
7280281	105
7281307	100
7281308	100
7281309	100
7281310	102A
7281806	128
7281891	100
7282315	105
7282358	109
7283377	110MP
7284137	123AP
7284513	160
7284751	102A
7285354	5982
7285663	121
7285774	104
7285776	121
7285778	104
7286856	123AP
7287079	5072A
7287107	179
7287110	121
7287112	179
7287117	179
7287452	123AP
7287940	126
7288019	614
7288072	105
7288073	105
7288076	105
7288079	105
7289041	121
7289047	104
7289079	121
7289097	179
7290593	121
7290594	104
7291252	104
7292308	160
7292683	179
7292684	127
7292689	179
7292690	121
7292955	121
7293818	162
7293819	162
7294133	102A
7294796	121
7294910	161
7295195	108
7295196	108
7295197	123AP
7296314	123AP
7296476	5072A
7296811	123AP
7297043	104
7297053	123AP
7297054	123AP
7297092	104
7297093	104
7297258	5072A
7297347	179
7297348	127
7297358	139A
7297980	161
7298079	121
7299325	116
7299720	105
7299771	121MP
7299780	179
7299803	121MP
7301660	179
7301661	179
7301664	162
7301665	162
7301666	162
7302024	159
7302340	117
7302699	162
7303105	102A
7303120	123AP
7303304	162
7304149	163A
7304380	123AP
7305468	107
7305469	5072A
7305476	726
7305783	121
7306982	130
7309160	130
7311074	128
7311325	709
7311350	128
7313063	162
7313568	721
7314584	123AP
7397027	703
7440006	113A
7492377-5	142A
7492377-P1	135A
7492377-P5	142A

PART NUMBER	NTE REPLACEMENT
7492377-P10	135A
7500801	159
7528046-P4	9932
7528048-P4	9946
7528153-P4	9948
7528156P1	910
7528157P1	909
7528159-P4	9944
7528160-P4	9951
7528374P3	9951
7570003	121
7570003-01	121
7570004	123AP
7570004-01	123AP
7570005	123AP
7570005-01	123AP
7570005-02	123AP
7570005-03	123AP
7570008	123AP
7570008-01	123AP
7570008-02	123AP
7570009	128
7570009-01	123AP
7570009-21	123AP
7570011-01	125
7570011-02	125
7570013	159
7570013-01	159
7570014	5802
7570014-02	109
7570014-05	116
7570014-34	116
7570015-34	116
7570016	109
7570016-02	109
7570016-03	109
7570021-12	146A
7570021-21	146A
7570022-01	175
7570024-02	116
7570030-01	185
7570031-01	152
7570032-01	129
7570215-21	177
7570215-24	116
7570215-34	116
7571329-01	166
7576004-01	159
7576015-01	123AP
7576015-02	199
7576015-03	199
7576015-04	199
7576015-05	199
7576016-01	128
7582438-01	109
7582439-01	109
7601010	128
7777146-P2	109
7777146-P3	109
7777146-P4	109
7777146-P23	109
7777146-PI0	109
7835297-01	100
7840540-1	123AP
7851316-01	102A
7851317-01	102A
7851318-01	103A
7851319-01	103A
7851320-01	158
7851321-01	103A
7851322-01	104
7851323	160
7851324-01	123AP
7851325	123AP
7851326	123AP
7851327	123AP
7851328-01	169
7851329-01	166
7851379-01	123AP
7851380-01	123AP
7851441-01	116
7851442-01	5069A
7851467-01	103A
7851650-01	161
7851651-01	161
7851652-01	159
7851654-01	109
7851655-01	109
7851657-01	116
7851947-01	109
7851949-01	123AP
7851950-01	123AP
7851952-01	123AP
7851953-01	123AP
7851954-01	159
7851955-01(NPN)	155
7851955-01(PNP)	131
7851956-01	128
7852223-01	109
7852223-01A	109
7852264-01	116
7852438-0	109
7852438-01	109
7852439-01	116
7852452-01	199
7852454	123AP
7852454-01	123AP
7852455-01	123AP
7852457-01	289
7852459-01	123AP
7852460-01	175
7852577-01	166
7852775-01	102A
7852776-01	102A
7852778-01	102A
7852779-01	102A
7852781-01	123AP
7852782-01	109
7852897-01	160
7852899-01	126
7852900-01	160
7852902-01	109
7852903-01	614
7852904-01	135A
7852907-01	116
7853090-01	132
7853091-01	229
7853092-01	123AP
7853093-01	229
7853094-01	123AP
7853098-01	109
7853099-01	166
7853351-01	102A
7853352-01	102A
7853354-01	102A
7853356-01	102A
7853357-01	109
7853358-01	116
7853463-01	123AP
7853464-01	123AP
7853465-01	123AP
7855282	109
7855282-01	109
7855283-01	177
7855283-01(AMPEX)	102A
7855284-01	116
7855291-01	123AP
7855292-01	123AP
7855293-01	123AP
7855294-01	123AP
7855295-01	131
7855296-01	102A
7855297-01	102A
7855298-01	152
7855352-01	109
7855357-01	109
7898489	744
7899744	744
7902310	128
7910070-01	102A
7910071-01	102A
7910072-01	121
7910073-01	184
7910076-01	116
7910108-01	161
7910111-01	5072A
7910112	1003
7910112-01	1003
7910122-01	1003
7910134-01	132
7910267-01	175
7910268-01	133
7910269-01	123AP
7910270-01	123AP
7910271-01	128
7910272-01	128
7910273-01	128
7910274-01	128
7910275-01	116
7910276-01	614
7910278-01	139A
7910584-01	123AP
7910585-01	123AP
7910586-01	123AP
7910587-01	123AP
7910588-01	102A
7910589-01	102A
7910590-01	116
7910780-01	108
7910781-01	107
7910783-01	126
7910784-01	614
7910801-01	102A
7910803-01	158
7910804-01	123AP
7910805-01	116
7910872-01	116
7910873-01	116
7910875-01	193
7913605	162
7914009-01	107
7914010-01	107
7914011-01	116
7914014-01	177
7914015-01	614
7932515	159
7932638	177
7932980	709
7935181	744
7936256	123AP
7936331	123AP
7937586	130
7937762	721
7938318	133
7939165	161
7939186	159
8000016	7416
8000017	7417
8000736	128
8000737	128
8002866	175
8004265	128
8010490	126
8010520	100
8010530	126
8011513	199
8014711	160
8014712	100
8015613	129
8020244	74LS244
8020245	74LS245
8020322	102A
8020324	102A
8020333	102A
8020334	102A
8020373	74LS373
8020540	102A
8020560	102A
8021897	102A
8021898	102A
8022630	102A
8022631	102A
8023643	102A
8023892	102A
8024152	158
8024250	127
8024390	160
8024390(AIWA)	102A
8024400	102A
8030529	4529B
8031825	108
8031836	108
8031837	107
8031839	123AP
8033690	123AP
8033696	123AP
8033720	123AP
8033730	123AP
8033803	108
8033804	108
8033943	108
8033944	123AP
8034903	152
8036683	107
8037330	123AP
8037332	123AP
8037333	123AP
8037343	128
8037353	123AP
8037722	107
8037723	108
8049008	21256
8050339	834
8050386	823
8051060	109
8052192	5071A
8052446	109
8052805	977
8100906	159
8110014	133
8110904	123AP
8111227	159
8111230	159
8112023	102A
8112027	102A
8112028	102A
8112071	102A
8112090	102A
8112143	131
8112146	102A
8112161	102A
8112162	102A
8113024	192
8113034	123AP
8113051	123AP
8113052	123AP
8113060	123AP
8113102	152
8113134	123AP
8113323	289
8113327	199
8114024	192
8114031	123AP
8114057	192
8115009	159
8120037	116
8120067	116
8120069	139A
8120126	177
8120133	116
8120164	605A
8121002	109
8121014	109
8130014	177
8131010	177
8150148	519
8150235	5014A
8249600	161
8257359	123A
8378759	128
8398315	128
8421133	128
8484771-1	5870
8484771-3	5872
8484771-7	5874
8484771-8	5875
8484771-10	5877
8505214-1	177
8507465-1	726
8508309	129
8508331	784
8508331RB	903
8508403-1	784
8510671-1	160
8510671-2	160
8510671-4	160
8510694-1	130
8510744-1	101
8510747-4	126
8511632-5	519
8511724-3	176
8511724-4	176
8511759-1	160
8512001-2	101
8513070-1	519
8516861-1	102
8516986	102
8516986-1	102
8516986-2	102
8518237-1	5870
8518237-2	5872
8518237-3	5874
8518237-9	5873
8518237-10	5875
8518382-1	5980
8518382-2	5982
8518382-3	5986
8518382-9	5983
8518382-10	5987
8518383-10	5862
8518383P1	5940
8518383P2	5944
8518383P3	5944
8519510-2	506
8521502-1	101
8521502-2	101
8521502-4	101
8521587-1	116
8521587-101	5802
8521587-102	5804
8521692-1	5483
8522468-1	123AP
8523209-1	519
8524402-1	101
8524402-4	101
8524440-2	102
8524457	128
8526849-1	100
8532787-2	519
8532787-3	519
8532787-4	519
8533519-1	519
8533588-1	908
8538640	160
8549020-1	519
8556188	108
8642305	152
8722248-2	199
8898302	744
8945077-12	102
8975103-2	101
8975158-1	102A
8981399-1	116
8981399-2	116
8989441-2	160
8989457-1	126
9000630	181
9000940	159
9001225-02	910D
9001324	152
9001345-02	7493A
9001346	7411
9001349-02	7486
9001349-03	7486
9001549-02	7440
9001551-02	7404
9001551-03	7404
9001567	9157
9001567-02	9157
9001570-02	7403
9001630	123AP
9001638	159
9001756	152
9001757	153
9002097-03	74107
9002159	123AP
9003091-02	7410
9003091-03	7410
9003096-02	7450
9003096-03	7450
9003097-02	74150
9003148	9930
9003148-01	9930
9003148-02	9930
9003149	9946
9003149-02	9946
9003150	9962
9003150-02	9962
9003150-03	9962
9003151	7400
9003151-03	7400
9003152	7474
9003152-01	7474
9003234-04	7438
9003398-03	7408
9003398-04	7408
9003420-03	7496
9003445-03	7492
9003642-03	7430
9003911	7432
9003911-01	7432
9003911-03	7432
9004017-01	219
9004075-03	7401
9004076	7420
9004076-03	7420
9004076-04	7420
9004093-03	7473
9004300-03	7476
9004360-03	7454
9004508-01	159
9004896-04	7453
9004898-04	7411
9004915-04	912
9006527-01	219
9007038	159
9008964-01	123AP
9100502	102A
9100621	102A
9100706	102A
9100944	102A
9101600	915
9176494	123AP
9246053	116
9246055	116
9248015	116
9248055	116
9248058	116
9330006	116
9340311	130
9340311-D5514	130
9340388	159
9340924	743
9341238	737
9341510	152
9341767	159
9341834	129
9342291	159
9345349	385
9347173	743
9739636-20	116
10000020	123AP
10015595	123AP
10017663	102
10022104-101	123AP
10027973-101	107
10041264-101	519
10041265-101	177
10067124	1913
10106058	123AP
10112562	159
10180316	177
10180722	123AP
10182330	159
10183001	199
10545502	123AP
10545506	199
10641140	159
10644417	175
10644433	123AP
10646032	130
10653086	175
10658276	9930
10658278	9936
10658279	9944
10658280	9945
10658281	9946
10658282	9951
10669652	519
10669666	159
10670399	159
10674068	5642
10676144	519
10713642	130
10805364	130
10814788	128
10849792	123AP
10896074	123AP
11018181	124
11019072	5526
11041003-1	181
11056225	290
11069934A	130
11076437	159
11083979	519
11103439	519
11114027	375
11114035	152
11114044	290A
11114044T	290A
11114045	290A
11114045T	290A
11114047	290A
11114048	290A
11114048T	290A
11114049	290A
11114049T	290A
11114050	85
11114055	85
11114056	85
11114056T	85
11114060	85
11114062	289A
11114063	399
11114063T	399
11114064	399
11114064T	399
11114066	85
11114066T	85
11114068	85
11114073	55
11114077	85
11114087	376
11114088	376
11114089	399
11114089T	399
11114090	399
11114091	399
11114091T	399
11114092	375
11114093	398
11114095	399
11114096	399
11114103	229
11114106	2302
11114107	89
11114112	375
11114113	2330
11114114	2302
11114119	123A
11114127	377
11114133	56
11114134	153
11114135	382
11114149T	32
11114181	2301
11114225T	31
11114306	2331
11114307	2302
11115001	116
11115002	116
11115002T	552
11115003	116
11115003T	116
11115004	5013A
11115014	552
11115017	177
11115020	125
11115024	519
11115024T	519
11115025	177
11115026	177
11115029	109
11115030	142A
11115040	5402
11115043	552
11115046	5011A
11115059	552
11115060	552
11115061	5005A
11115062	109
11115063	552
11115064	5013A
11115065	552
11115066	156
11115071	5021A
11115075	116
11115089	5013A
11115090	5011A
11115095	156
11115096	5036A
11115097	5018A
11115121	116
11115155	552
11115188	5013A
11115223	552
11115223T	552
11115358T	5010A
11115364T	5013A
11115376T	5018A
11115386T	5021T1
11115446	5804
11116191	5547
11119016	615P
11119023	712
11119024	1615
11119025	1620
11119026	1485
11119027	1234
11119030	1465
11119032	1409
11119034	15004
11119112	1773
11119113	1373
11119114	15029
11119118	15003
11119139	15007
11119140	15023
11119399	7010
11132875	102
11159860	519
11166527	130
11166535	128
11176377	177
11194628	181
11198132	123AP
11210016/7825	109
11210024/7825	116
11220009/7825	102A
11220018/7611	102A
11220022/7611	102A
11220046/7825	123AP
11220061/7825	158
11220076/7825	102A
11220106/7611	158
11233335	175
11242096	909
11253441	128
11268821	519
11290111	177
11292312	74H00
11292313	74H40
11292314	74H51
11292315	74H54
11322253	128
11369564	74H05
11667821	102
11706998-2	199
11707240	311
11707240B	311
11707240RA	311
11718319	128
11728100	941
11783453	102
11787173	519
11790334	5529
11800182	102
11802400	123AP
11802500	123AP
11803000	177
11858909	102
12090924-4	102A
12363800	175
12901503	159
12947206	519
12965471	123AP
12994851	123AP
12997748	519
13020000	102A
13020002	102A
13022501	326
13023002-2	229
13030189	177
13030192	116
13030256	125
13030266	177
13030274	177
13030285	5016A
13030301	109
13030312	109
13030313	116
13030401	143A
13033801	116
13035807-1	123AP
13037215	123AP
13038115	229
13038900	116
13040089	103A
13040095	102A
13040096	103A
13040216	123AP
13040229	109
13040236	102A
13040304	108
13040313	123AP
13040317	123AP
13040318	123AP
13040329	103A
13040347(NPN)	103A
13040347(PNP)	102A
13040349	131
13040352	102A
13040357	123AP
13040362	108
13040421	108
13040429	129
13040456	158
13040459	108
13050221	116
13053605	199
13053607	199
13069306	199
13073525	289
13083908	123AP
13093003	107
13093004	107
13094517	199
13104367	130
13104560	128
13104561	129
13214051	5995
13217724	102
13217732	102
13411386	519
13411409	519
13421244	21
13428129	2072
13443767	102
13447321	102
14000936-32	287
14001376-01	5697
14001376-02	5697
14001376-03	5697
14137652	116
14317184	181
14500001-001	9946
14500001-002	9949
14500001-003	9936
14500001-004	9961
14500004-001D	9936
14500004-001P	9936
14500004-002	9937
14500004-003	9935
14500016-001	941D
14500016-002	941M
14500022-001	123
14628601	124
14636723	780
14700990	120
14714661	519
14714703	519
14714729	5995
14714760	123AP
14714786	123AP
14734248	909
14735521	154
14736221	159
14769302	505
14798029	159
15038433	123AP
15039456	123AP
15039464	123AP
15039472	519
15039480	519
15059850	124
15077183	175
15102718	102
15105300	309K
15108046	125
15109200	74S04
15116637	74C74
15348931	175
15349616	75188
16103860	823
16173130	1465
16233010	1006
16270092	123AP
16270175	519

PART NUMBER	NTE REPLACEMENT
16271033	9936
16271041	9936
16324992	399
16353343	736
16453116	2061
16520001-1	123AP
16658600	519
16763333-001	909
16797300	123AP
16797301	123AP
17100901	109
17100902	110MP
17101881	109
17101882	110MP
17184600	7405
17200000	177
17200240	177
17201160	611
17201350	116
17210010	116
17210430	614
17240010	116
17241480	519
17350060	159
17350061	159
17350066	159
17350068	129
17771400	128
17809000	130
17854700	519
17942800-01	159
17942800-801	159
18151417	128
18179900	123AP
18341300	519
18458117	941
18525200	126
18855002	294
18901105	123AP
18901106	123AP
18901107	123AP
18901402	287
18901606	108
18901607	108
18901807	108
18911202	159
18955002	294
19020065	152
19020095	130
19080002	116
19166123	9961
19901403	128
19901503	106
19901606	319P
19901607	319P
19901806	108
19901807	108
20001786-134	109
20001786-141	116
20001786-142	116
20025153-77	123AP
20030703-0701	123AP
20030703-0702	159
20052600	123AP
20080127	177
20088308	199
20115070	109
20130109	125
20278600	130
20506623-128	224
20912578-1	176
20918596-2	121
22114210	192
22114225	186
22114253	159
22114254	187
22115175	614
22115181	109
22115182	109
22115183	116
22115192	109
22115405	116
22130009	128
22692012	177
22901513	108
22902046	108
23109992	138A
23111006	121
23113056	123AP
23114001	108
23114004	127
23114007	154
23114009	127
23114011	121
23114015	289
23114015(HOR OSC)	289
23114017	289
23114021	102A
23114023	108
23114026	127
23114028	154
23114031	108
23114033	121
23114034	108
23114036	108
23114037	161
23114038	175
23114043	108
23114044	233
23114045	103A
23114046	123AP
23114050	159
23114051	159
23114052	154
23114053	154
23114054	154
23114056	108
23114057	108
23114058	128
23114060	108
23114061	102A
23114070	130
23114070A	130
23114071	130
23114074	506
23114078	233
23114081	290
23114082	108
23114083	175
23114084	175
23114086	175
23114087	123AP
23114088	175
23114095	154
23114097	127
23114100	130
23114104	233
23114108	130
23114109	109
23114112	107
23114118	123AP
23114119	123AP
23114124	159
23114125	154
23114126	107
23114127	108
23114131	185
23114132	184
23114133	185
23114134	184
23114136	159
23114137	290
23114138	159
23114148	107
23114155	123AP
23114157	107
23114163	319P
23114164	161
23114165	319P
23114171	108
23114172	108
23114180	108
23114181	108
23114195	128
23114200	124
23114208	162
23114211	102A
23114212	123AP
23114213	123AP
23114214	123AP
23114215	123AP
23114216	199
23114217	199
23114218	123AP
23114220	175
23114221	175
23114232	128
23114238	108
23114248	198
23114249	171
23114250	171
23114251	171
23114253	152
23114254	152
23114255	123AP
23114258	199
23114259	289
23114260	289
23114261	290
23114262	290
23114266	198
23114267	123AP
23114268	124
23114275	123AP
23114276	123AP
23114277	124
23114280	229
23114282	229
23114293	159
23114296	123AP
23114297	289
23114299	123AP
23114300	106
23114301	159
23114302	159
23114313	193
23114314	192
23114315	124
23114317	162
23114321	165
23114323	238
23114325	159
23114336	198
23114343	165
23114344	198
23114347	290
23114349	199
23114544	217
23114550	159
23114552	85
23114564	217
23114662	85
23114733	293
23114735	294
23114758	94
23114768	89
23114821	85
23114864	328
23114900	198
23114915	192
23114918	398
23114919	162
23114923	375
23114939	197
23114941	198
23114944	162
23114945	238
23114961	175
23114962	238
23114966	289
23114969	291
23114974	198
23114975	198
23114982	198
23114983	190
23114992	292
23114993	198
23114994	192
23114995	193
23114999	198
23115012	125
23115016	174
23115019	116
23115022	118
23115023	116
23115025	112
23115042	116
23115044	116
23115046	116
23115049	177
23115050	177
23115051	507
23115052	116
23115057	123AP
23115058	123AP
23115064	177
23115065	552
23115068	177
23115070	109
23115071	177
23115072	177
23115074	178MP
23115076	139A
23115079	113A
23115080	177
23115085	116
23115088	109
23115094	506
23115098	125
23115102	109
23115108	177
23115109	177
23115113	112
23115115	109
23115116	109
23115117	125
23115118	125
23115120	116
23115120(DIODE)	177
23115120(RECT)	125
23115121	112
23115129	109
23115130	125
23115131	506
23115140	116
23115142	116
23115145	506
23115146	506
23115168	137A
23115185	116
23115192	506
23115194	177
23115199	116
23115200	116
23115201	116
23115215	504
23115227	112
23115238	5081A
23115249	177
23115250	116
23115263	116
23115273	116
23115277	5072A
23115285	177
23115292	5081A
23115294	116
23115296	116
23115298	506
23115300	116
23115301	5084A
23115321	513
23115328	5081A
23115331	177
23115334	513
23115337	116
23115338	506
23115368	5074A
23115374	5072A
23115377	506
23115455	135A
23115486	5031A
23115532	552
23115535	109
23115549	5029A
23115565	5802
23115621	116
23115665	5013A
23115690	552
23115774	5013A
23115797	552
23115809	177
23115810	552
23115878	615P
23115884	5082A
23115888	552
23115889	552
23115897	177
23115903	6402
23115908	5071A
23115909	552
23115910	552
23115912	506
23115913	506
23115914	116
23115919	142A
23115921	5010A
23115922	615P
23115931	5013A
23115938	504
23115947	156
23115949	109
23115955	137A
23115960	506
23115965	525
23115966	125
23115978	177
23115979	5011A
23115981	506
23115984	138A
23115986	513
23115987	5072A
23115990	5084A
23115994	125
23115999	506
23118052	580
23118060	587
23118094	552
23118173	5330
23118186	584
23118338	580
23118450	125
23118538	5013A
23118822	116
23118850	5013A
23118943	581
23118977	580
23119003	711
23119005	711
23119011	1101
23119012	1004
23119014	747
23119017	1062
23119019	749
23119022	1101
23119142	1782
23119228	1792
23119355	15035
23119489	1744
23119548	1684
23119566	1791
23119710	1780
23119723	1835
23119742	74LS26
23119763	1373
23119796	1547
23119862	4093B
23119863	4013B
23119901	1545
23119950	1236
23119960	7493A
23119961	1135
23119978	712
23119981	1128
23119990	1128
23119993	1130
23124037	108
23126177	107
23126183	161
23126184	123AP
23126289	107
23126290	107
23126291	107
23126577	112
23126620	108
23200596-1	128
23205955	85
23205981	85
23206375	290A
23206471	289A
23206631	289A
23212215	376
23213515	234
23219925	399
23225690	552
23244121	2302
23302565	552
23303515	519
23303525	519
23303531	519
23311006	104
23311066	121
23311545	5021A
23311555	5021A
23313515	519
23314055	290A
23314158	1894
23314197	157
23316184	597
23316380	551
23316411	615
23317975	5010A
23318075	5012A
23318086	1847
23318151	5014A
23318271	5018A
23318409	1835
23319911	125
23373411	519
23381625	552
23383211	177
23383215	519
23389311	598
23394811	552
23394815	552
23394821	552
23394911	116
23394915	116
23399911	5003A
23576100	1083
23685015	1676
23691515	1589
24501000	123AP
24539800	159
24551302	128
24553500	519
24553501	519
24553600	123AP
24561601-E	5995
24561602-E	5995
24561603	5995
24561604-E	5995
24562000	123AP
24562001	123AP
24562100	123
24562101	123AP
24562200	123AP
24562300	159
24733362	129
25114101	102A
25114102	102A
25114103	102A
25114104	102A
25114116	123AP
25114121	123AP
25114130	154
25114143	124
25114161	108
25115102	109
25115108	116
25115115	116
25175800	519
26004001	123AP
26004301	159
26004961	159
26005121	159
26006820	177
26006910	177
26008020	177
26010006	132
26010010	195A
26010011	507
26010016	159
26010020	123AP
26010021	289
26010022	237
26010023	199
26010024	152
26010026	229
26010027	290
26010028	177
26010029	137A
26010030	177
26010031	109
26010032	177
26010033	116
26010035	1102
26010041	297
26010044	5072A
26010046	137A
26010047	177
26010051	229
26010052	297
26010053	236
26010056	108
26010057	177
26010058	195A
26010059	152
26010062	611
26011310	159
26036001	290A
26316032	159
26410102	116
26414701	125
26422008	5007A
26422206	5084A
26501505	123
26630109	712
27113100	116
27123050	116
27123070	116
27123100	116
27123100A	116
27123120	116
27123150	109
27123220	116
27123240	109
27123270	109
27125080	123AP
27125090	123AP
27125110	102A
27125120	102A
27125140	123AP
27125160	123AP
27125170	158
27125210	108
27125220	107
27125230	126
27125240	100
27125250	123AP
27125260	102A
27125270	123AP
27125300	123AP
27125310	103A
27125330	102A
27125340	102A
27125350	102A
27125360	102A
27125370	123AP
27125380	123AP
27125460	123AP
27125470	123AP
27125480	158
27125490	103A
27125500	123AP
27125540	176
27125550	102A
27126060	131/155
27126060(NPN)	155
27126060(PNP)	131
27126090	121
27126100	130
27126130	121
27126130(TRANS)	121
27126130-12	121
27126220	108
28100812-001	177
28101149	234
28102128-002	199
28102128-004	199
28102163-001	177
28105203-001	152
28105203-002	152
28105207-001	234
28105249-001	153
28105789-001	199
28990207	5312
29004423	947
30000010	126
30000021	102A
30000425	290A
30000741(ECP)	288
30100041	38
30100081	374
30101163	107
30200033	152
30200053	123AP
30200062	233
30200091	108
30200101	130
30200131	289A
30200271	107
30201031	85
30201121	85
30201541	199
30300250	382
30300311	373
30300313	373
30300541	92
30400021	132
30400131	453
30600010	109
30600011	109
30600020	109
30600040	116
30600140	142A
30600560	612
30600650	5021A
30600691	5013A
30600981	5315
30601691	519
30677435-001	909
30682592-001	234
31001145	91
31210049-00	160
31210077-44	160
31210240-33	160
31210240-44	160
31210471-11	160
31210506-11	160
31210506-22	160
31220054-00	102A
32510001	116
32600025-01-08A	123AP
34002412	903
34002412-3	903
34621786-1	519
35002711	106
35002712	106
35002713	106
35002912	193
35024712	197
35024812	292
35026712	254
35044100	161
35044396	161
35044397	161
35044398	161
35044399	161
35045416	123AP
35045502	123AP
35045708	123AP
35045712	123AP
35046506	164
35046611	124
35046612	124
35046613	124
35046811	124
35046812	124
35046813	124
35046911	130
35046912	130
35046913	130
35047218	123AP
35047219	123AP
35049311	152
35050411	198
35050412	198
35053212	85
35062712	198
35063412	375
35065417	184
35065911	293
35120718	458
35393060-01	123AP
35393060-02	123AP
35393060-03	123AP
36001004	177
36001008	140A
36001009	109
36001010	519
36001200	128
36002003	109
36003007	5096A
36003034	5072A
36003157	5010A
36107051	116
36107062	116
36107094	552
36107152	506
36107153	177
36107154	506
36107167	558
36107253	506
36107255	506
36171000	106
36171100	123AP
36186200	9157
36188000	7475
36188700	74H00
36771100	124
37000918	109
37001003	1047
37001009	712
37001011	712
37001034	1616
37002001	1046
37003001	177
37003001(IC)	1089
37003020	1410
37007014	1483
37008002	1091
37009010	1550
37051036	4066B
37051100	4030B
37051310	4011B
37051378	4053B
37246602	177
37246711	177
37275350	177
37568200	506
37568250	125
37568800	116
37582000	506
38970300	123AP
39126500	941
40306400	749
40760211-002	5695
40760211-P2	5695
41013566	116
41020618	116
41020687	156
41021007	116
41023224	116
41023225	116
41025773	125
41025849	116
41027063	116
41027612	109
41027613	109
41027991	125
41027992	109
41029009	109
41029290	109
41029498	5084A
41029499	116
41030618	156
41520419	116
41522875	110MP
41527380	109
41622859	177
41624836	109
42020414	140A
42020737	140A
42023425	143A
42024925	5071A
42027065	5188A
42027092	5075A
42029566	143A
43020418	121MP
43020731	128
43021017	123AP
43021067	107
43021083	123AP
43021168	129
43021198	128
43021415	128
43022055	160
43022134	132
43022458	159
43022577	121
43022860	107
43022861	123AP
43023190	181
43023212	123AP
43023221	123AP
43023222	129
43023223	128
43023843	130

PART NUMBER	NTE REPLACEMENT
43023844	123AP
43023845	159
43024216	130
43024218	184
43024219	185
43024225	133
43024306	190
43024833	126
43024834	126
43024859	199
43024873	199
43024878	229
43024879	128
43024880	129
43024972	123AP
43025055	123AP
43025056	123AP
43025059	123AP
43025538	199
43025539	192
43025620	160
43025762	132
43025832	132
43025972	123AP
43026284	128
43026285	129
43027213	152
43027214	152
43027243	123AP
43027244	159
43027379	123AP
43027571	186
43027614	108
43027615	108
43027616	108
43027617	108
43027618	107
43027619	106
43027620	123AP
43027987	152
43029037A	259
43029471	233
43029472	233
43029483	199
43029484	297
43029485	298
43029486	300
43040313	128
43100103	109
43122874	726
43126551	722
43126551-A	722
43200103	109
43300203	109
43540012	116
43600101	116
44007301	108
44008401	108
44011001	123AP
44079004	199
44089001	107
44090004	123AP
44211001	158
46013296-3	4016B
46156741P1	941
46156741P2	941D
48134666	123AP
48134842	123AP
48137195A	159
48869715	181
50210104	123AP
50210300-00	123AP
50210300-00VF	123AP
50210300-01	123AP
50210300-01VF	123AP
50210300-11	123AP
50210310-10	123AP
50210310-10VF	123AP
50210310-11	123AP
50210400-00	159
50210400-00VF	159
50210400-01	159
50210400-01VF	159
50210510	123AP
50210600-00 VF	159
50210600-00VF	159
50210600-01	159
50210600-01VF	159
50210600-03	159
50210610-10	159
50210610-13	159
50210700-00	199
50210700-00VF	199
50210700-01VF	199
50210700-10	199
50210710-10VF	199
50210800-00	123AP
50210800-01	123AP
50210800-01VF	123AP
50210800-02	123AP
50210800-02VF	123AP
50210800-10	128
50210800-11	123AP
50211210	159
50211300-00	106
50211300-00VF	106
50211300-01	106
50211300-10	106
50211400-00	234
50211400-01	234
50211410-10	234
50211410-11	234
50211500	159
50211500-01	159
50211500-01VF	159
50211510-10	159
50211510-10VF	159
50211510-11	159
50211600-00	106
50211600-00VF	106
50211600-01	106
50211600-02	106
50211600-02VF	106
50211600-10	106
50211600-12	106
50211610-10	106
50211610-12	106
50211900	128
50212100	159
50220601	175
50220602	175
50221300-01	130
50221400-01	218
50221800	152
50221800-01	152
50251300	941
50254200	7406
50254400	915
50254600	74S00
50254700	74S10
50254900	74S20
50255000	74S113
50613800	923
51003059	123AP
51003092	123AP
51003108	159
51122245	123AP
51122870	128
51122880	128
51126540	175
51126850	130
51161325	159
51310000	9932
51310001	9933
51310002	9936
51310003	9944
51310004	9946
51310005	9948
51310006	9962
51310007	9094
51320000	7400
51320001	7402
51320002	7404
51320003	7410
51320004	7420
51320005	7440
51320006	74170
51320008	7472
51320009	7403
51320010	7426
51320011	7430
51320012	7400
51320016	7451
51320017	7405
51320018	7486
51330005	7408
51510566A01	722
51513753A09	712
51513753A39	1440
51544789J01	1234
51544789J02	1234
51565600VF	123AP
51577500	9930
51577600	9932
51577700	9933
51577800	9944
51577900	9946
51578000	9948
51578100	9962
51581300	123AP
51624200	9944
51631000	519
51715100	910D
51717000	9094
51717100	9097
51753300	910
52335500	7495
52335600HL	74H04
52335700	74H20
52335800	74H50
52335800HL	74H50
52335900	74H74
52335900HL	74H74
53015201	156
53020612	128
53223463	377
53227011	85
54967774-P5	102
55310007-115	139A
55330007-001	507
55335005-001	5870
55430001-001	159
55430028-001	218
55440007-001	123
55440011-001	108
55440023-001	108
55440043-001	123
55440048-001	123AP
55440063-001	128
55440087-001	130
55440091-001	130
55440111-001	107
55460014-001	132
55517007	159
56301500	123AP
56301600	159
57000901-504	123AP
57276605	105
57279005	105
57279007	105
57279009	105
57279011	105
57279017	105
57279025	105
57279027	105
57279033	105
57279073	105
57279076	105
57279293	105
57279298	105
57279566	105
57279793	105
57280281	105
57282315	105
57288072	105
57288073	105
57288076	105
57288079	105
57299720	105
59700278	123AP
60067017-001	923D
61260039	126
61260039A	126
62009616	109
62013559	102A
62018526	102A
62020911	5804
62034076	160
62034297	112
62034327	102A
62041528	102A
62041536	102A
62042575	126
62042583	123
62042591	102A
62042648	160
62042656	160
62042664	102A
62043679	160
62043695	160
62044888	126
62045035	310
62045280	5012A
62045531	102A
62045612	5018A
62045930	102A
62046287	131
62046406	160
62046414	160
62046422	160
62047119	116
62047259	120
62047364	126
62047895	125
62048158	108
62049200	102A
62049219	102A
62049626	126
62049774	126
62050217	101
62051302	506
62051310	506
62051450	127
62051493	154
62051509	104
62052570	102
62052791	116
62052821	126
62052848	126
62054212	121MP
62054298	128
62054336	102
62057957	102A
62078502	102
62081579	121
62084103	121
62084200	121MP
62084936	121
62084960	123AP
62085053	116
62087025	126
62087447	116
62087498	102A
62087595	105
62087609	103A
62087617	101
62087633	121
62087641	160
62087668	160
62087684	100
62088502	102
62094613	109
62103264	116
62103272	116
62104678	108
62104759	128
62105038	107
62105143	113A
62105275	123AP
62105291	107
62111607	126
62113480	102A
62114258	158
62116331	154
62118946	102A
62118970	102
62119500	126
62119551	109
62119578	103A
62123648	126
62123672	5014A
62123788	126
62134143	102
62134496	109
62134941	109
62135182	160
62135301	102A
62139455	112
62139633	160
62139668	160
62140844	116
62140887	126
62140895	126
62140933	126
62141042	127
62154543	110MP
62166916	145A
62208945	128
62208953	129
62236302	123AP
62256877	116
62256885	172A
62256893	159
62258942	5019A
62260408	123
62278566	129
62279664	159
62360755	116
62371566	121
62372540	124
62379995	123AP
62380004	160
62380020	102
62381620	110MP
62383976	703
62389478	185
62389486	184
62389494	128
62389699	123AP
62389702	159
62390174	142A
62393661	153
62393688	152
62393696	129
62438096	159
62468211	177
62488131	5809
62506288	159
62506296	108
62506318	108
62506334	123AP
62506350	233
62506377	123AP
62522666	136A
62522674	116
62522682	113A
62522704	120
62522712	506
62522720	177
62522739	116
62530898	126
62530915	128
62537124	108
62537140	123AP
62539283	123AP
62539291	159
62539305	108
62539313	106
62539321	108
62539348	161
62540311	5081A
62541555	108
62543299	109
62543892	108
62543906	108
62543914	154
62562226	116
62562625	506
62563265	159
62563273	199
62563281	199
62563303	108
62563309	154
62563311	159
62563346	108
62563354	108
62563362	123AP
62563370	124
62564490	5071A
62564504	142A
62564520	506
62564539	177
62565122	108
62565160	161
62565963	159
62566369	159
62573741	130MP
62590661	159
62593660	129
62593687	123AP
62593707	123AP
62593717	161
62593725	161
62593733	160
62596023	160
62596279	123AP
62604727	123AP
62605465	108
62605618	118
62608498	159
62608528	132
62614765	160
62618663	123AP
62636696	161
62638214	123AP
62638222	191
62638230	123AP
62638249	199
62638257	129
62638265	128
62638281	123AP
62638303	123AP
62638311	123AP
62638338	5080A
62638346	113A
62652381	123AP
62669462	5079A
62674954	712
62674962	714
62674997	147A
62675004	123AP
62675012	123AP
62691263	123AP
62691271	108
62691298	128
62695595	108
62695919	107
62695927	107
62695943	108
62697571	177
62700122	102A
62707666	160
62711205	193
62711728	102A
62711914	123AP
62713747	108
62713755	102
62714832	160
62723645	160
62727128	192
62727772	116
62728574	103
62728590	160
62728604	124
62733942	123AP
62734450	153
62734469	712
62734596	196
62734604	163A
62734612	124
62734639	154
62734647	192
62734655	233
62734663	193
62734671	152
62734728	506
62736283	749
62736305	783
62736976	121
62737395	171
62737409	123AP
62737417	124
62737425	130
62737433	159
62737441	165
62737468	159
62737476	123AP
62737484	123AP
62737492	123AP
62737522	154
62737646	124
62741406	177
62741422	177
62741449	165
62741457	159
62741465	199
62742585	104
62743182	152
62743794	153
62744081	199
62744162	116
62746483	145A
62746491	149A
62747501	504
62748273	161
62748281	199
62748451	171
62749067	116
62749558	116
62752300	131
62752319	100
62752327	100
62752742	159
62759720	159
62760087	116
62761261	109
62761288	5098A
62761296	5079A
62761318	506
62761326	506
62761334	116
62761350	177
62761377	177
62766212	184
62766220	123AP
62766239	108
62766247	159
62766255	199
62766263	199
62766271	159
62766603	160
62771208	171
62771210	289
62771224	290
62771232	5404
62771240	161
62771364	100
62784822	109
62785225	123AP
62786272	188
62789204	165
62789247	161
62789255	161
62789263	108
62793163	123AP
62798564	107
62801328	506
62806060	159
62887676	102A
62921967	142A
65372000	128
65600500	9930
65600600	9932
65600700	9946
65600800	9093
65600900	9099
65611000	9094
65611100	9097
66630196	956
67283700	128
70114087	312
70114088	312
70114117	459
70115067	5037A
70119023	1263
70119041	1268
70119062	4011B
70119063	4028B
70119064	4050B
70119526	15007
70119527	15023
70260450	107
70260490	614
70260540	139A
70270050	116
70270250	177
70270390	116
70270490	5401
70270500	5444
70270720	116
70270730	1054
70370050	116
71773660	110MP
72035900	159
72729031	105
73010780	5072A
73300337	74265
73301503	2102
74140226-001	130
74140226-002	130
74140226-003	130
75857322	123AP
76276722	116
80001300	116
80001400	116
80002400	116
80050100	123AP
80050300	103A
80050400	160
80050500	126
80050600	129
80050700	121
80051001	130
80051500	123AP
80051600	129
80052101	199
80052102	123AP
80052201	128
80052202	123AP
80052301	128
80052302	123AP
80052402	130
80052600	123AP
80052700	129
80052800	103A
80053001	123AP
80053300	152
80053400	123AP
80053501	132
80053600	108
80053702	130MP
80104900	126
80105200	126
80105300	126
80146620	160
80146630	160
80203350	102A
80205400	102A
80205600	102A
80222631U	102A
80226310	102A
80236400	102A
80236430	158
80243900	102A
80285400	176
80318250	123AP
80337390	128
80338030	108
80338040	108
80339430	108
80339440	108
80366830	107
80366840	107
80383840	123AP
80383930	123AP
80383940	123AP
80389910	123AP
80414120	130
80414130	130
80421980	128
80510600	109
80521881	109
80523520	614
81063405	187
81073304	290
82073206	199
82409501	123AP
82410300	129
83037204	123AP
83038004	229
83039404	123AP
83073205	123AP
83073206	123AP
83073304	123AP
83073305	123AP
83073306	199
83073504	123AP
83078402	229
83093005	107
83094502	123AP
83167403	229
83167405	229
83167503	229
83167505	229
84026103	192
84667800	909
86005052	85
86140070	123AP
86401000	123AP
87096010	116
87100600	109
87100605	109
87201881	109
87204260	109
87205530	614
87219410	116
87221394	614
87227880	177
87227881	177
87301620	600
87302650	177
87400020	116
87500620	110MP
87500720	116
87500920	139A
87600920	139A
87996010	614
88125010-9	123AP
88901010	2764
88902010	2764
88921010	2764
88922010	2732A
88941010	2732A
88942010	2732A(12)
88962010	2764
89941008	128
89942601	123AP
89942702	229
89946008	129
89960404	229
89962306	123AP
89962307	123AP
89962308	123AP
89962404	123AP
89963008	123AP
89963009	123AP
90200090	1006
90200100	1140
90270060	116
90270080	5455
90500160	743
91011500	909
91011900	923
91013300	941D
91013600	940
91014400	949
91015300	947
91056140	159
91190032	116
92005600	102A
92115000-23	177
93037230	123AP
93037240	123AP
93038040	123AP
93039440	123AP
93063240	123AP
93063270	123AP
93063280	123AP
93063470	123AP
93064440	199
93064450	123AP
93073260	199
93073340	123AP
93073350	128
93073440	154
93073540	123AP
93078420	107
93082830	123AP
93082840	123AP
93082920	107
93094502	123AP
93097120	128
93938040	123AP
93939440	107
94029220	124
94650700-00	159
94650700-01	159
94742308	128
94810300	5547
94813000	181
94824100-00-PS203	123AP
94824100-01 PS203	123AP
94824100-01-PS203	123AP
94824101	123AP
94825000-05	9093
94825000-11	9936
94846400-00	5695
94846400-01	5695

PART NUMBER	NTE REPLACEMENT
94846400-02	5695
94913000-01	941D
95114101-00	102A
95114102-00	102A
95114109-00	102A
95114135-00	102A
95114140-00	121
95115115-00	125
95349700	197
95522800	128
95524600	124
96421866	125
102190574J	615P
102990574J	615P
110654492-001	177
120001190	160
120001192	100
120001195	102A
120001300	116
120002013	102A
120002014	102A
120002213	160
120002214	160
120002216	160
120002513	160
120002515	160
120002518	160
120002520	160
120002521	102A
120002656	160
120002748	102A
120004492	160
120004493	102A
120004494	102A
120004495	102A
120004496	108
120004497	108
120004880	108
120004881	108
120004882	108
120004883	123AP
120004884	195A
120004885	224
120004886	224
120004887	121
130050156	912
131000561	128
131000562	121
131001007	130
131005353-1	197
131005807	128
131005808	129
134804204-101	116
134804290-101	121
134804596-301	116
150392015(ORGAN)	968
152221011	102A
152221483	160
158466879	123AP
163547338	723
164883611	2060
181515417	192
191116631P1	123
200230046	1676
200315428	376
200322301B	399
200494001	398
201220851	5019A
201221228	5021A
201221294	5024A
201222570	5035A
226021014	108
229005013	123AP
229005014	123AP
229005015	123AP
229018032	108
229018033	108
229018034	108
229020423	108
229021014	108
229025010	108
229510015V	108
229510031V	108
229510032V	108
229510033V	108
231150050	109
238208001	175
261002302	910D
261004303	941M
261015401	923
300111008	109
300111010	519
300313007	5079A
300313017	5025A
300313033	5071A
300313038	5013A
300919024	116
300919028	5804
300919032	5313
301201115	85
301201117	85
301201163	107
301201169	196
302001114	220
302001122	312
303452152	778A
303452156	788
303452177	1206
303452197	1217
303452215	778A
312004900	160
312104732	160
312104733	160
313003167-910	823
314743006	175
346190001	128
370010011	712
373511111S	374
402003173	117
410000608F	290A
410000733P	290A
410000733Q	290A
410001015Y	290A
410001249R	374
410001249S	374
410020536G	85
410020945K	85
410020945P	85
410020945Q	85
410021568R	184
410021568S	184
410021730L	107
410022001L	85
410022228A	399
410022271D	399
410022271E	399
410022274E	289A
410022274F	289A
410022334L	54
410022373K	379
410022909R	399
410022909S	399
410023117R	373
410023117S	373
410149042B	287
410149042C	287
415100574J	615P
415101379C	1661
415200050	1027
415207601W	1673
415401160	801
420208700	125
430203845	129
430233843	152
436004601	199
436005001	123AP
436005901	234
436006101	128
436006201	129
436006401	199
440008401	116
440009905	177
440011001	123AP
450010201	108
450010701	161
460003800	74C221
480155400	85
485134922	123AP
485134923	123AP
485134924	123AP
485134925	123AP
485134926	123AP
485134956	160
485134997	199
485137002	128
485137370	197
530205003	553
530278001	5134A
532390017	1V014
570004503	123AP
570005452	123AP
570005503	123AP
600000060	109
600000150	177
601100001	5018A
601100002	5013A
602000002	116
603000002	613
610440023	116
610447001	319P
610462003	186
610480000(SYL)	123AP
610480001	194
610499001	123AP
610511001	47
612075003	801
612327001	1566
612362002	1231A
612448001	960
614071001	171
619000192	85
619001900	85
630000003	236
632000001	295
632000002	235
632037218	123AP
632039418	229
632049514	234
632049518	159
632073518	289
632122617	186A
632197406	235
640000002	1192
640000003	1232
661000001	601
662100200	175
662201000	159
733000108	74160
800000029-006	161
802026310	102
840907213	289A
840911138	519
840912023	5008A
850050062	102
860048420	194
860050002	102
860050012	102
860050021	199
860050032	101
860050042	103
860050051	85
860050052	101
860050072	103
860050082	101
860050112	103
860050122	101
860050132	101
860050152	103
860050172	101
860050182	101
860050262	101
860050272	100
860050292	101
860050392	121
860050402	85
860050412	85
860050432	121
860050442	199
860050452	85
860050462	85
860050472	103
860050482	101
860050492	85
860050502	85
860050512	199
860050522	6401
860050552	85
860050562	85
860050572	121
860050582	121
860050602	101
860050612	101
860050622	101
860050632	100
860050642	159
860050652	85
860050672	100
860050702	123
860050712	123
860050722	123
860050732	123
860050742	123
860050752	123
860050792	159
860050802	101
860050812	85
860050822	159
860050832	121
860050842	130
860050852	175
860050872	103
860050912	100
860050932	123A
860050952	133
860050962	133
860050972	199
860051002	184
860051012	224
860051022	152
860051042	159
860051052	172A
860051062	172A
860051072	152
860051082	152
860051092	128
860051102	199
860051112	47
860051122	130
860051142	85
860051152	192A
860051162	192A
860051172	199
860051182	199
860051192	192A
860051222	133
860051285	199
860051312	199
860051332	159
860051342	5400
860051352	199
860051362	85
860051392	187A
860051402	85
860051422	199
860051432	85
860051462	133
860051472	133
860051482	123AP
860051492	159
860051502	159
860051512	159
860051532	159
860051552	291
860051562	291
860051612	123AP
860051632	197
860051692	159
860051712	194
860051722	129
860051762	153
860051782	261
860051792	262
860051802	194
860051822	247
860051832	248
870980171	506
871081555	177
871992606	552
871993683	156
872911976	290A
872911980	157
872930892	315
874911978	85
874990135	1778
875910582	1676
875980198	1773
881250108	123AP
881250109	123AP
885540026-3	7420
885540031-2	74H21
910678870	159
1031956310	615P
1039956300	615P
1330000301	548
1348042041	116
1348042901	121
1348045963	116
1522210111	102A
1522210131	126
1522210300	102A
1522210921	126
1522211021	126
1522211200	102A
1522211221	102A
1522211328	102A
1522211921	160
1522214400	160
1522214411	126
1522214435	126
1522214821	126
1522214831	160
1522216500	102A
1522216600	126
1522217400	160
1522223720	123AP
1522270100	109
1522270101	109
1522270208	109
1523270105	116
1610419828A	85
1611190553	614
1611819064	123AP
1652990020	156
1660999024A	5031A
1679003608	1003
1760089001	123AP
1760099001	199
1760579001	199
1760589001	199
1760609001	107
1760609002	107
1760609003	199
1760829001	107
1760979001	107
2001200033	1471
2002010061	7493A
2002010072	7473
2002020066	4053B
2002020077	4066B
2002100022	1004
2002110206	1045
2002110269	1236
2002110332	1668
2002110345	1616
2002120012	749
2002120033	1080
2002120046	1522
2002120051	1545
2002120067	1413
2002120078	1128
2002300012	1245
2002300023	1471
2002300029	1550
2002300033	1471
2002300046	1676
2002400617	801
2002400638	1576
2002400752	1572
2002500812	714
2002501006	714
2002501300	791
2002502202	1296
2002502317	1589
2002502385	15016
2002600107	147A
2002600122	615P
2002600149	615P
2002600183	1546
2002600198	615P
2002600213	15019
2002610039	1794
2002610042	1795
2002610086	1800
2002610091	1801
2002610109	1387
2002800034	941M
2002800047	987
2002800052	987
2002800112	778A
2002900395	1569
2003028829	85
2003037227	229
2003037309	199
2003038092	229
2003038208	319P
2003038812	233
2003038829	85
2003049501	295
2003049519	295
2003049526	295
2003049614	295
2003049621	295
2003051513	124
2003055813	163A
2003064314	238
2003073517	289
2003082823	289
2003082837	229
2003094515	85
2003094516	85
2003094522	85
2003094536	85
2003094554	85
2003094560	85
2003098316	171
2003102529	175
2003110607	94
2003117044	165
2003121216	184
2003134410	199
2003144795	198
2003145404	94
2003150702	198
2003150710	198
2003150727	198
2003151428	376
2003151432	376
2003162700	128
2003172208	198
2003172216	198
2003172305	198
2003173009	107
2003173017	107
2003174006	85
2003174014	85
2003174021	85
2003181508	85
2003181516	85
2003181523	85
2003181537	85
2003184100	90
2003184502	90
2003185506	108
2003189025	199
2003189109	165
2003189304	165
2003190604	107
2003194135	399
2003195914	85
2003200320	85
2003206300	376
2003206800	376
2003206818	376
2003207306	375
2003212204	283
2003222907	399
2003222915	399
2003223000	399
2003223018	399
2003223039	399
2003223606	382
2003223614	382
2003238316	31
2003245819	85
2003245826	85
2003245830	85
2003245843	85
2003248119	373
2003248126	373
2003248164	373
2003248175	373
2003248217	399
2003261019	399
2003278549	85
2003278554	85
2003340271	373
2003340283	373
2004047310	153
2004049081	153
2004049514	159
2004056215	290
2004056260	290A
2004060858	159
2004067350	290
2004073315	290A
2004073322	290A
2004073336	290A
2004073354	290A
2004074304	185
2004082606	159
2004082614	290A
2004085415	290A
2004085422	290A
2004093323	290A
2004094001	398
2004095210	290A
2004095227	290A
2004101500	290A
2004101518	290A
2004101525	290A
2004104814	290A
2004104821	290A
2004104835	290A
2004120026	153
2004302210	158
2004305600	102A
2004305618	102A
2004341519	158
2004356122	159
2004356220	294
2004356801	153
2004503018	103A
2004546826	293
2004547806	152
2004547814	375
2004580809	389
2004586902	89
2004587002	89
2004588008	152
2004588016	152
2004589802	89
2004590007	89
2004613904	375
2004645306	2302
2004645503	2302
2004700116	233
2004703322	290A
2007100213	459
2007100220	459
2007200000	6402
2008000001	109
2008000026	109
2008000064	109
2008000075	174
2008010028	177
2008010094	519
2008010102	601
2008010110	519
2008010127	177
2008010131	177
2008010218	519
2008010225	519
2008010263	519
2008100027	116
2008100076	506
2008100093	125
2008100130	116
2008110103	552
2008120009	552
2008130040	506
2008130084	116
2008130171	506
2008130198	552
2008130234	552
2008140021	580
2008150011	580
2008160106	580
2008220125	140A
2008220174	5021A
2008220531	5024A
2008220851	5019A
2008220895	5013A
2008220970	5010A
2008221014	5013A
2008221048	5014A
2008221097	5016A
2008221113	5016A
2008221168	5019A
2008221211	5022A
2008221522	5036A
2008221772	5013A
2008221824	5014A
2008221890	5016A
2008221975	5018A
2008222052	5021A
2008230039	135A
2008230042	5070A
2008230057	5071A
2008400055	553
2008400061	112
2009120101	116
2009120187	116
2009120209	552
2009120370	116
2009130017	125
2009130075	116
2009130100	580
2009130118	580
2009700063	503
2012000092	109
2012000100	109
2012000118	110MP
2012010028	177
2012010144	519
2012010159	519
2012010165	177
2012010176	552
2012010218	519
2012010225	519
2012010263	519
2012100119	525
2012100126	116
2012100158	552
2012100164	525
2012110103	125
2012120009	552
2012120038	552
2012120056	552
2012130234	506
2012220030	5013A
2012220104	5015A
2012220139	5019A
2012220174	5021A
2012220368	5024A
2012220456	5013A
2012220851	5019A
2012220867	5025A
2012220935	5009A
2012220970	5010A
2012220982	5010A
2012221006	5011A
2012221014	5015A
2012221053	5013A
2012221070	5014A
2012221120	5016A
2012221152	5018A
2012221179	5019A
2012221196	5020A
2012221203	5020A
2012221228	5021A
2012221245	5022A
2012221250	5022A
2012221294	5024A
2012221522	5035A
2012221693	5010A
2012221723	5010A
2012221737	5010A
2012221784	5013A
2012221817	5013A
2012221862	5014A
2012221890	5015A
2012222005	5018A
2012222013	5018A
2012222020	5019A
2012222052	5019A
2012222079	5019A
2012222096	5021A
2012222129	5021A
2012222227	5023A
2012222244	5024A
2012222570	5035A
2012222754	5020A
2012222760	5022A
2012222861	5022A
2012223529	5006A
2012230042	5070A
2012230091	5020A
2012230109	142A
2012230312	142A
2012400037	112
2013000510	107
2013120208	116
2013120216	116
2013120223	116
2013120225	116
2013120255	116
2013120313	116
2013120334	116
2013120347	116
2013200021	290A
2013200035	290A
2013200048	290A
2013200069	32
2013200070	32
2013200082	32
2013200179	290A
2013200181	290A
2013200196	290A
2013200779	290A
2013500015	399
2013500037	31
2013500040	31
2013500084	85
2013500099	85
2013500107	107
2013500115	399
2013500136	85
2013500149	85
2013500154	85
2013500213	85
2013500268	85
2013500279	85
2013500281	85
2013500302	85
2013500310	85
2013500327	85
2013500359	90
2013500365	90
2013500388	85
2013500470	382
2013500482	399
2018257359	100
2102400429	778A
2103500327	85
2104000602	290A
2290180119	108
2295100224	108
2295100225	108
2295100226	108
2295100227	160
2295100228	108
2295100232	117
2295100233	125
2295100234	117
2295100235	117
2302250002	524V15
2302550002	524V15
2307890127	605A
2791012150	123
2791012153	102
3012011134	199
3071339004	1192
3111007300	109
3112006000	109
3121004900	160
3121007744	160
3121024033	160
3121024044	160
3121047111	160
3121050611	160
3121050622	160
3122005400	102A
3520743010	159
3539306001	123AP
3539306002	123AP
3539306003	123AP
4004056260	290A
4004085415	290A
4004095210	290A
4100006285	159
4100009870	290A
4100104753	158
4100105440	294
4100108240	378
4100206443	199
4100208271	161
4100208283	229
4100208291	161

PART NUMBER	NTE REPLACEMENT
4100208292	229
4100208293	229
4100210472	229
4100213591	85
4100217172	289
4100218532	85
4100218533	85
4100218544	85
4100230380	51
4100230420	2308
4100304000	382
4100305914	199
4100308230	379
4100313980	2302
4100900102	107
4100900103	107
4100900104	107
4100900116	199
4100903554	297
4100905254	298
4100907633	107
4100990136	123AP
4101490420	287
4101490428	287
4102100220	158
4104007193	290
4104007380	185
4104103242	158
4104204602	107
4104204603	107
4104204612	107
4104204613	229
4104205352	123AP
4104206440	123AP
4104206442	199
4104208282	199
4104208283	199
4104213173	289
4104213421	123AP
4108296047	123AP
4108296238	123AP
4108296255	123AP
4108296257	123AP
4109208280	128
4109208284	123AP
4109213174	289
4109213354	199
4120100090	109
4120100600	109
4120129000	109
4120200090	109
4120200602	109
4120400260	605A
4120421392	611
4120500565	5011A
4120500622	5013A
4120500625	5013A
4120501005	5019A
4120501200	5021A
4120510625	5013A
4120900010	177
4120910010	116
4120922220	555
4121141480	519
4121200051	5069A
4129100000	177
4129100600	109
4129100602	110MP
4129104002	116
4129121392	614
4129200602	110MP
4129227907	614
4129301329	614
4129321292	614
4129400003	177
4129501200	142A
4130060010	552
4130100012	552
4130100015	580
4130100021	552
4130101011	116
4130120020	125
4130202040	125
4131000220	6087
4138104002	116
4139000005	116
4139104002	116
4150002031	1054
4152032010	1179
4152056300	615P
4152075300	1827
4152076200	1845
4152078300	15002
4154011370	788
4154011510	1237
4157013102	801
4159072032	1154
4159761157	801
4202003173	116
4202003200	156
4202003500	109
4202003700	506
4202003900	506
4202005000	113A
4202005600	110MP
4202006100	177
4202006200	177
4202006500	116
4202006700	506
4202006800	116
4202007600	116
4202007601	506
4202007700	506
4202007800	125
4202007801	506
4202007802	116
4202007806	125
4202007900	113A
4202008000	116
4202008500	116
4202008600	109
4202008700	125
4202009200	5077A
4202010100	177
4202011200	5074A
4202011300	5071A
4202011400	5071A
4202011500	5074A
4202012000	5077A
4202012501	5074A
4202012700	145A
4202012800	5077A
4202013300	5085A
4202013600	177
4202014400	116
4202014500	116
4202014600	506
4202016200	177
4202017200	525
4202017600	506
4202018500	116
4202018700	519
4202019400	5143A
4202019500	5143A
4202020100	5070A
4202020500	506
4202020900	506
4202021000	116
4202021100	156
4202021700	5070A
4202021900	519
4202022300	116
4202022900	525
4202023000	506
4202023100	116
4202023200	506
4202023300	525
4202023400	116
4202024200	5071A
4202024300	5071A
4202093599	109
4202104170	167
4202104470	125
4202104570	506
4202104770	102A
4202104870	506
4202105070	174
4202105470	138A
4202106270	505
4202107270	503
4202107370	503
4202107470	177
4202107570	504
4202107670	519
4202107970	506
4202108070	505
4202108170	505
4202108270	116
4202108570	5080A
4202109070	5074A
4202109170	177
4202109370	125
4202109371	125
4202110270	552
4202110370	116
4202110470	552
4202110770	552
4202110870	5074A
4202114970	558
4202115770	506
4202116670	5074A
4202116870	552
4202116970	552
4202117170	506
4202117270	552
4202117370	552
4202117470	5022A
4202117570	5022A
4202970330	145A
4203008000	506
4203970101	199
4206002300	1004
4206002400	1004
4206002600	1080
4206002900	1080
4206003900	1080
4206004000	712
4206004400	1004
4206004600	712
4206004700	1122
4206007500	1158
4206009200	738
4206009700	738
4206012500	1216
4206042400	1004
4206104970	712
4206105170	749
4206105470	712
4206105670	1009
4206105770	712
4206105870	712
4206107970	1187
4360021001	123AP
4800155039	109
4800155047	519
4800155059	198
4800155060	519
4800155060(12)	519
4800155073	85
4800155077	519
4800155077(12)	519
4800155093	85
4800155094	85
4800155144	615P
4800155144(19)	615P
4800155166	5071A
4800155172	19
4800155177	116
4800155179	552
4800155222	399
4800155258	519
4800155293	16
4800155294	19
4800155295	5071A
4800155296	552
4800155307	85
4800155330	145A
4800155334	519
4800155349	145A
4800155349(11)	145A
4800155364	293
4800155372	16
4800155380	290A
4800155400	16
4800155402	16
4800155402(11)	85
4803101109-02	121
4890155343	19
5147013102	801
5191100060	519
5191300240	519
5300731044	5011A
5300731045	5014A
5301271120	5021A
5301471160	5025A
5301481003	506
5301511001	552
5301511003	552
5301511004	552
5301570629	5013A
5301570689	5014A
5301571001	552
5301571100	5019A
5301571110	5020A
5301571120	5021A
5301571150	5024A
5301571160	5025A
5301571180	5027A
5301571180(11)	5027A
5301571200	5029A
5301571220	5030A
5301571249	5000A
5301571300	5035A
5301571330	5036A
5301571439	5008A
5301571569	5011A
5301571629	5013A
5301571689	5014A
5301571829	5016A
5301571919	5018A
5301710001	552
5301711001	552
5301711002	116
5301711569	5011A
5301791001	177
5301810001	177
5301810002	519
5301811001	177
5301811002	519
5301811003	519
5301819001	519
5301819002	177
5301840002	506
5301841001	506
5301871001	177
5301920629	137A
5301921120	177
5301921180	5077A
5301921200	5079A
5301921300	5084A
5301921330	147A
5301921919	139A
5301990479	5069A
5301990689	5071A
5301990919	5018A
5302050003	553
5302261002	506
5302390011	125
5302390019	5010A
5302390037	519
5302390038	519
5302390056	5010A
5302390057	2V150
5302390066	5021T1
5302390086	615
5302390161	552
5302390187	519
5302470001	112
5302471001	112
5302491300	5035A
5302491519	5010A
5302491569	5011T1
5302491629	5013T1
5302491759	5015A
5302511001	177
5302511002	519
5302521001	177
5302521002	177
5302531005	5079A
5302531008	5082A
5302531014	142A
5302541006	5019A
5302541011	142A
5302541012	5011A
5302541031	5029A
5302541038	5016A
5302541039	5013A
5302551001	116
5302561002	125
5302570001	5031A
5302600001	580
5302600002	580
5302601001	580
5302601002	552
5302601003	506
5302611001	552
5302611001	552
5302620001	506
5302621001	506
5302621002	125
5302641001	515
5302641002	515
5302660001	177
5302661001	177
5302671002	552
5302680001	519
5302681001	519
5302681002	519
5302751001	506
5302751002	525
5302751003	525
5302771001	109
5302781001	5134A
5302781005	5116A
5302781006	5188A
5302801001	5152A
5302840001	5314
5302980001	3041
5302991002	116
5303000001	3041
5303020002	5011A
5303020003	5021T1
5303021002	5011T1
5303021003	5021A
5303021006	5021A
5303050002	552
5303050003	552
5303051002	552
5303051003	580
5303061001	5801
5303100001	580
5303100003	580
5303101001	580
5303101002	580
5303101003	580
5303130001	553
5303261003	588
5303291629	5013T1
5303371120	5021A
5303371220	5030A
5303371330	5036A
5303371399	5007A
5303371479	5009A
5303371689	5014A
5303371829	5016A
5303371919	5018A
5303381859	5018A
5310200102	290A
5310200210	85
5310200875	162
5310200901	376
5310200902	376
5310200910	399
5310200911	399
5310200920	399
5310200930	375
5310200940	289A
5310200950	389
5310400011	398
5320200050	712
5320200150	1545
5320200160	1532
5320200170	1496
5340200040	177
5340200591	552
5340200600	177
5340200601	519
5340200721	116
5340200722	125
5340200723	109
5340200724	558
5340200901	552
5340200902	552
5340200950	525
5340300450	5013A
5390120949	5019A
5390140249	5000A
5390150519	5010A
5390190040	5011A
5390190230	5016A
5390190949	5018A
5390330230	605A
5390620399	5007A
5390620829	5072A
5390750519	5010A
5390760111	5020A
5390760121	5021A
5390760131	5022A
5390760271	5033A
5390760689	5014A
5390990280	5018A
5391100060	519
5391100260	580
5391100630	555
5391100640	506
5391200020	586
5391200030	552
5391200110	580
5391200302	552
5391200380	552
5391200510	552
5391200520	116
5391300010	5332
5391300240	519
5391300380	125
5391300390	552
5391400020	593
5391500170	5802
5391500200	552
5391500231	580
5391500270	519
5391500320	519
5391500390	552
5391500400	156
5391500432	580
5391500610	580
5391900100	5018A
5700045452	123
5760004002	472
5760004003	186
5760004018	351
5760004024	367
5760004027	367
5760004028	367
5760004051	350
5760004053	352
5760004054	363
5760004056	363
5760004057	364
5760004058	362
5760004059	472
5760004061	363
5760004062	366
5760004063	366
5760004066	368
6100830001	159
6100830006	159
6100839001	159
6100839006	159
6100940004	199
6101320001	123AP
6101480003	123AP
6101489003	123AP
6101490010	152
6101500002	123AP
6101580003	159
6102130001	128
6102230001	159
6102239001	159
6102240001	123AP
6102249001	199
6102260001	123AP
6102260002	123AP
6102270003	50
6102280005	49
6102320001	123AP
6102320002	123AP
6102329001	123AP
6102329002	123AP
6102500001	171
6102500003	171
6103600001	288
6103600002	288
6103609001	128
6103680001	188
6103680002	123AP
6103690001	159
6103699001	159
6103700001	123AP
6103720002	91
6103900001	395
6103902001	395
6103909001	395
6103920001	238
6103920002	238
6104150001	399
6104190001	229
6104190002	69
6104210001	152
6104210002	153
6104210003	152
6104210004	153
6104210005	331
6104210008	332
6104270002	210
6104270003	210
6104280002	49
6104330001	2300
6104330002	2302
6104330003	2300
6104340001	159
6104340004	159
6104342004	159
6104349001	159
6104349004	159
6104350001	123AP
6104350002	123AP
6104350004	199
6104352001	123AP
6104352002	123AP
6104359001	123AP
6104359002	123AP
6104359004	199
6104360001	51
6104370001	399
6104379001	287
6104380001	187A
6104390001	159
6104400120	85
6104400121	54
6104400123	290A
6104420001	319P
6104429001	319P
6104430001	48
6104440001	89
6104470001	229
6104500001	123AP
6104500002	159
6104510002	159
6104510003	159
6104540001	123AP
6104560002	123AP
6104570002	196
6104570003	196
6104580003	192
6104600001	159
6104620003	196
6104630002	238
6104631002	238
6104640001	159
6104650001	123AP
6104710001	171
6104730001	238
6104740001	123AP
6104750001	159
6104760001	129
6104770001	386
6104790001	123AP
6104800001	194
6104820001	159
6104860001	123AP
6104870001	159
6104880001	190
6104980001	159
6104989001	159
6104990001	123AP
6105000001	123AP
6105000004	123AP
6105009001	123AP
6105009004	123AP
6105077001	2406
6105080001	1890
6105090001	238
6105110001	47
6105119001	47
6105170001	2310
6105170002	2310
6105170003	2310
6105260001	294
6105269001	294
6105272001	383
6105280001	374
6105292001	229
6105310001	198
6105320001	2315
6105320003	2315
6105330001	51
6105352001	382
6105382002	47
6105389002	123AP
6105390001	54
6105450001	128P
6105460001	129P
6105510001	51
6105520001	31
6105529001	31
6105530001	32
6105539001	32
6105540001	399
6105549001	399
6105550001	2302
6105589001	123AP
6105650001	54
6105670001	123AP
6105680001	159
6110130001	5351
6110130003	5351
6110140005	5400
6110140007	5400
6110150001	5404
6110160001	5351
6110180001	5456
6110190001	56008
6120480004	941M
6120750003	801
6121260001	1785
6121630001	987
6121860001	4016B
6122500001	4069
6122750001	829
6122990001	1439
6123030001	1416
6123050001	1231A
6123270001	1566
6123280001	1632
6123290001	1567
6123300101	1572
6123300102	15016
6123300140	1661
6123300215	1787
6123300334	1673
6123320001	1374
6123320003	1374
6123320006	1376
6123340001	797
6123350001	4094B
6123380002	822
6123380003	822
6123390001	1413
6123470002	821
6123510001	712
6123540001	740A(8)
6123590001	857M
6123620001	1231A
6123620002	1231A
6123630001	852
6123630005	852
6123700001	1580
6123700002	1580
6123940001	1413
6123940002	1545
6123999001	977
6124120002	1803
6124450001	1632
6124480001	960
6124490001	1752
6124740001	4052B
6124790001	960
6124790003	964
6124790005	968
6124800001	859
6124890001	1744
6124930001	4053B
6124940001	778A
6124960001	1655
6125350001	859
6125390001	859
6125450001	1786
6125640001	1801
6125660001	4002B
6125740001	1797
6125750001	1846
6125860001	1776
6125860002	1777
6126250001	15002
6126280001	1798
6126710001	960
6140500001	123AP
6148000001	171
6190000080	16
6190000190	19
6190000200	941M
6190000210	1217
6190000290	16
6190000450	199
6190000460	2357
6190000470	2359
6190000490	56
6190000500	13
6190000520	18
6190000530	16
6190000540	85
6190000731	85
6190001002	399
6190001230	85
6190001231	85
6190001451	85
6190001470	16
6190001520	16001
6190001580	399
6190001620	90
6190001711	31
6190001733	85
6190001740	399
6190001743	399
6190001900	85
6190001902	85
6190002200	2315
6190002420	85
6190002450	2302
6190003350	152
6190003782	184
6190003900	184
6190003910	399
6190003920	2308
6190004412	107
6190004520	47
6190004560	56
6190004940	399
6190004950	184
6190004960	379
6190005200	54
6190005440	107
6190005600	289A
6190005610	184
6190100010	395
6190100151	2356
6190100402	290A
6190100550	17
6190100661	290A
6190100663	290A
6190100940	19
6190100950	19
6190100960	19
6190101480	159
6190101710	153
6190101720	290A
6190101750	185
6190101780	159
6190102070	378
6190102420	290A
6192001330	1789
6192020400	15001
6192040031	1813
6192040040	15030
6192060090	1674
6192080080	1805
6192080250	1676
6192120110	1837
6192140020	615P
6192140080	960
6192140170	15019
6192140620	615
6192160030	1810
6192180010	15043
6192180080	15005
6192180110	1834

PART NUMBER	NTE REPLACEMENT
6192180120	15044
6390620331	5036A
6404350002	123AP
6611000900	506
6611001000	506
6611001100	552
6611001200	506
6611001300	116
6611001500	506
6611001501	116
6611001700	116
6611001800	116
6611002300	506
6611002700	558
6611003200	177
6611003300	525
6611003500	558
6611003600	558
6611003601	552
6611003602	116
6611003701	125
6611004601	552
6611004602	552
6611004803	552
6611005100	5304
6611007300	116
6611063700	125
6612002200	506
6612004000	109
6612005800	177
6612005900	177
6612006000	177
6612006001	177
6612006101	552
6612008900	109
6612009000	109
6612009002	109
6613003000	519
6615000100	5013A
6615000101	137A
6615000200	5074A
6615000600	138A
6615002603	5013A
6615002701	5015A
6615002788	5008A
6615005000	139A
6615005500	5082A
6615005600	5025A
6621000100	199
6621000200	375
6621000600	165
6621000601	389
6621000700	376
6621000701	376
6621001000	289
6621001100	289
6621001400	94
6621001401	94
6621001500	376
6621001800	198
6621002300	162
6621002400	238
6621002800	291
6621003000	238
6621003100	123AP
6621003200	123AP
6621003201	287
6621003400	123AP
6621003500	289
6621003501	85
6621003502	85
6621003601	85
6621003701	287
6621003702	399
6621003704	399
6621004000	319P
6621005000	233
6621005001	85
6621006200	171
6621007200	152
6621007403	289A
6621008100	289
6621009100	107
6621009600	238
6621010001	175
6621014601	399
6621014602	399
6621015602	319
6621016000	289A
6621016100	123AP
6622000100	128
6622000200	175
6622000300	123AP
6622000401	123AP
6622005100	184
6622005400	375
6623001100	159
6623001900	290
6623001902	290A
6623002000	159
6623002003	290A
6623002026	290A
6623002100	159
6623002200	159
6623002300	290
6623002304	290A
6623002700	398
6623002801	290A
6623002802	290A
6624001000	159
6624001100	129
6624002000	159
6624003100	153
6624003200	289
6625002601	5021A
6631000100	5021A
6631000200	6402
6631001200	6402
6631100010	5465
6640000200	964
6640000300	968
6640000410	960
6644000100	712
6644001100	1128
6644001700	1181
6644001900	1130
6644004201	1236
6644004202	1236
6644004400	1004
6644012700	1496
8001100001	519
8001100003	519
8001100005	177
8001200001	123AP
8001200004	128
8409070041	290A
8409070042	290A
8409072111	85
8409072112	85
8409072113	85
8409120231	5009A
8600500122	101
9511410100	102A
9511410200	102A
9511410900	102A
9511413500	102A
9511414000	131
9511510200	109
9511511500	125
12613740490	102
12618740490	102
13480084523	117
13480084555	117
13480085512	5190AK
13480085513	5209AK
13480204101	116
13488240306	116
13488240307	519
13488240308	116
13488240309	177
13488240310	506
13488240311	519
13488240312	506
13488240313	177
13488240314	519
13488240315	177
13488240316	519
13488240317	519
13488240318	519
16000190201	126
16002190952	290A
16009090545	193
16100190668	108
16101191173	152
16102190693	123AP
16102190929	108
16102190930	123AP
16102190931	186
16102191327	199
16103190668	108
16103190930	107
16103190931	107
16104190668	107
16104190828	85
16104190930	107
16104191168	123AP
16104191225	108
16104191226	108
16105190536	123AP
16105190828	85
16105191229	128
16106190536	85
16106190537	123AP
16106190772	123AP
16108190536	199
16108290536	128
16109190536	199
16109209536	123AP
16112190710	107
16112190772	123AP
16114190772	123AP
16116190634	123AP
16118190634	123AP
16147191229	123AP
16153190945	85
16156197229	128
16171190693	123AP
16171190858	123AP
16171191368	123AP
16172190693	123AP
16172190858	123AP
16200190186	102
16201190022	102A
16201190186	102
16201190187	158
16204190457	158
16204190514	153
16204190632	185
16207190405	158
16208190187	158
16211190022	158
16212190022	158
16256197228	129
16304190031	302
16304190400	382
16304190439	373
16304198000	195A
16307190632	123AP
16343190142	186
16356179229	128
16377190632	123AP
16400690060	109
16401190188	109
16405990022	177
16411190188	109
16411992471	519
16411992473	177
16412190410	109
16415490000	109
16419990032	109
16501090016	116
16501190005	116
16501190016	116
16505090005	116
16512390001	125
16516390010	117
16523375242	116(2)
16601090082	5016A
16602090100	116
16602995856	140A
16609090024	5031A
16609590220	5030A
16611190553	613
16613190555	614
16629291210	116
16740135809	1024
16799025673	2061
16799062774	1331
16799063089	1227
20091301118	580
44202007800	506
48351307059	580
48352097065	1580
48500155284	290A
53017101001	519
53191200110	580
57000901504	123AP
61101600001	5511
62170835330	177
134800847274	109
134800849022	177
134800854093	177
134800855216	109
134800855677	5213A
134800863030	109
134800863350	5187AK
134800864205	5190A
134800865539	110MP
134800867716	109
134800868504	5206A
134800868825	5187A
134800868907	5226A
134800869525	123AP
134804204101	116
134804290101	121
134804596301	116
134882095301	116
134882095302	116
134882095303	116
134882095304	116
134882137801	5192A
134882137802	5200A
134882137803	5232A
134882137804	5174AK
134882137805	5175AK
134882137806	5188A
134882137807	5224A
134882137808	5186A
134882137809	5229A
134882139701	109
134882139702	109
134882178101	109
134882178102	109
134882178103	109
134882178104	109
134882178105	109
134882178106	109
134882178107	109
134882178108	109
134882178110	109
134882178111	109
134882178112	109
134882178113	109
134882256301	5013A
134882256302	5014A
134882256303	5009A
134882256305	5045A
134882256306	141A
134882256307	5009A
134882256308	5016A
134882256309	5016A
134882256310	144A
134882256311	5019A
134882256312	5011A
134882256313	5023A
134882256314	5024A
134882256315	5010A
134882256316	5016A
134882256317	5021A
134882256318	5018A
134882256319	5014A
134882256320	5033A
134882256321	146A
134882256322	139A
134882256323	5014A
134882256324	5027A
134882256325	5021A
134882256328	140A
134882256329	5090A
134882256330	5096A
134882256331	5031A
134882256332	5019A
134882256333	5002A
134882256334	5020A
134882256335	135A
134882256336	5083A
134882256337	5071A
134882256338	5018A
134882256339	5079A
134882256340	140A
134882256342	5082A
134882256343	139A
134882256344	5015A
134882256345	5017A
134882256346	5067A
134882256347	5014A
134882256348	5022A
134882256349	5031A
134882256350	5022A
134882256351	135A
134882256353	5077A
134882256354	142A
134882256356	139A
134882256357	5079A
134882256358	5086A
134882256359	145A
134882321507	5283A
134882321508	5283AK
134882392202	177
134882392203	177
134882392204	177
134882392206	177
134882392207	177
134882392208	177
134882392209	177
134882392210	177
134882392211	177
134882392212	177
134882392213	177
134882392214	177
134882392215	177
134882393301	177
134882393305	177
134882420301	177
134882420302	177
134882420303	519
134882420304	519
134882420305	177
134882466801	116
134882466802	116
134882466803	116
134882466804	116
134882466806	116
134882466807	116
134882466808	125
134882466812	506
134882466813	506
134882466814	506
134882466815	506
134882466816	506
134882466817	506
134882466818	506
134882466821	506
134882466825	506
134882466827	506
134882466828	506
134882732304	5944
134882921701	109
134882921702	109
134882921704	109
134882921705	109
134883461501	5075A
134883461502	5022A
134883461503	5066A
134883461504	5093A
134883461505	5070A
134883461506	5096A
134883461507	5075A
134883461508	147A
134883461509	5090A
134883461510	5010A
134883461511	5082A
134883461512	146A
134883461513	5068A
134883461514	5096A
134883461515	5018A
134883461516	5095A
134883461517	5001A
134883461518	5027A
134883461519	5067A
134883461520	146A
134883461521	5129A
134883461522	5029A
134883461523	5010A
134883461524	5028A
134883461525	5014A
134883461526	5031A
134883461527	5012A
134883461528	5141A
134883461530	148A
134883461531	5022A
134883461532	5016A
134883461533	5027A
134883461534	5117A
134883461535	5137A
134883461536	137A
134883461537	5077A
134883461538	136A
134883461539	5135A
134883461540	5010A
134883461541	135A
134883461542	5071A
134883461543	5006A
134883727201	5198AK
134883875401	5454
134883875402	5455
134883875403	5543
134883875406	5455
134884461544	5115A
202530001710	116
301720490201	109
310720440170	121MP
310720490000	123AP
310720490010	123AP
310720490020	123AP
310720490060	185
310720490070	121
310720490080	108
310720490100	123AP
310720490150	123AP
310720490190	121MP
310720490201	109
400100010160	102A
400100020120	102A
404100030180	128
404100900160	123AP
404120010180	109
404120030100	109
404120030110	177
404120040100	109
404130010150	116
483513037009	580
483513037046	5036A
483513037049	5022A
483513037051	5011A
483513037053	552
483513037062	519
483513037067	139A
483513037068	5011T1
483513037134	5077A
483513037138	5077A
483513037139	5010T1
483513037141	5014A
483513037142	5014A
483513037143	519
483513037145	519
483513037146	519
483513037148	5332
483513037151	116
483513037209	522
483513037231	5025A
483513037254	593
483513037256	596
483513037326	3022
483513037355	580
483513047051	123AP
483513047052	123AP
483513047053	159
483513047054	159
483513047055	123AP
483513047056	199
483513047058	48
483513047059	399
483513047061	2302
483513047064	123AP
483513047128	2418
483513047129	2408
483513047133	16
483513047134	19
483513047137	85
483513047144	19
483513047146	2409
483513047147	2409
483513047148	3120
483513047226	253
483513047238	12
483513047259	2355
483513047261	16
483513047265	13
483513047488	2409
483513047571	2359
483513087136	519
483520917279	4069
483520987065	1580
483520987069	1773
483520987342	15044
505130010150	116
583513037058	587
933000611112	116
933001170112	102A
933009290112	137A
933022960012	108
933022960112	123AP
933022970112	108
933076760112	191
1110991010200	198
2025911018810	109
2025953101010	177
2035510069362	199
202252300001701	116
202523000018101	116
202252300017101	116

NOTES

NOTES

NOTES

NOTES

NOTES

NOTES

NOTES

NOTES

NOTES

NOTES

NOTES

NOTES

NOTES

TO ORDER ADDITIONAL NTE CATALOGS OR "QUICK*Cross*™" SOFTWARE, COMPLETE & MAIL OR FAX THIS CARD.

PLEASE SEND ME:

☐ NTE SEMICONDUCTOR CROSS-REFERENCES
_____ copies ($4.95 each)
Enclose check or money order.

☐ NTE RELAYS AND ACCESSORIES CATALOGS
_____ FREE copies

☐ NTE FLAMEPROOF RESISTOR CATALOGS
_____ FREE copies

☐ NTE CAPACITOR CATALOGS
_____ FREE copies

☐ "QUICKCross" SOFTWARE ON FLOPPY DISKETTES ____5¼" (1.2M) $5.00 ea. ____3½" (720K) $6.00 ea. ____5¼" (360K) $7.50 ea.

Enclosed please find my check or money order for $_____
(U.S. funds only.)

Name _____
Title _____
Company _____
Address _____
City _____
State/Province _____ Zip _____
Phone ( ) _____
Products(s), you specify: _____

Mail to:
NTE Electronics, Inc.
44 Farrand St.,
Bloomfield, NJ 07003
or FAX (201) 748-6224

SEMICAT 92

USE THIS POSTAGE PAID CARD TO REPORT A FAULTY REPLACEMENT RECOMMENDATION

NTE # _____ failed to replace Part No. _____
Brand _____ type of equipment (T.V., VCR, Etc.) _____
_____ Model/Chassis No. _____
Device Application (Pwr Amp, Driver, etc.) _____
Reason for failure (if known, Case Style, lead config., elect., etc.) _____
_____
_____
Other comments _____
Distributor Purchased from _____
(name) (address)
Company name _____ Phone ( ) _____
Your name _____
Address _____
City _____ State _____ Zip _____

USE THIS POSTAGE PAID CARD TO REPORT A FAULTY REPLACEMENT RECOMMENDATION

NTE # _____ failed to replace Part No. _____
Brand _____ type of equipment (T.V., VCR, Etc.) _____
_____ Model/Chassis No. _____
Device Application (Pwr Amp, Driver, etc.) _____
Reason for failure (if known, Case Style, lead config., elect., etc.) _____
_____
_____
Other comments _____
Distributor Purchased from _____
(name) (address)
Company name _____ Phone ( ) _____
Your name _____
Address _____
City _____ State _____ Zip _____

USE THIS CARD TO ORDER ADDITIONAL CATALOGS FOR NTE:

- SEMICONDUCTORS
- RELAYS
- CAPACITORS
- FLAMEPROOF RESISTORS
- "QUICK*Cross*™" SOFTWARE

Simply complete the other side and mail.

NO POSTAGE NECESSARY IF MAILED IN THE UNITED STATES

BUSINESS REPLY MAIL

FIRST CLASS PERMIT NO. 64 BLOOMFIELD, NJ

POSTAGE WILL BE PAID BY ADDRESSEE

ATTN ENGINEERING DEPT
NTE ELECTRONICS INC
44 FARRAND STREET
BLOOMFIELD NEW JERSEY 07003-9892

NO POSTAGE NECESSARY IF MAILED IN THE UNITED STATES

BUSINESS REPLY MAIL

FIRST CLASS PERMIT NO. 64 BLOOMFIELD, NJ

POSTAGE WILL BE PAID BY ADDRESSEE

ATTN ENGINEERING DEPT
NTE ELECTRONICS INC
44 FARRAND STREET
BLOOMFIELD NEW JERSEY 07003-9892

New FROM NTE!

THE FULL SPECTRUM OF *Relays and Accessories*

THE NEXT WAVE OF OUR SUCCESS!
NTE is building on a decade of enormous success in universal semiconductors, resistors, and capacitors in a major way! We're introducing a full line of relays and accessories that add to the value of using NTE as your #1 second source!

MORE WAYS FOR YOU TO SAVE TIME AND MONEY!
We've added 270 relays, I/O modules, sockets and accessories to our inventory of over 6,000 universal devices that replace over 245,500 original numbers!

PRICE, PERFORMANCE AND FAST AVAILABILITY!
All are backed by NTE's reputation for affordability, unsurpassed quality and immediate parts availability!

Mail the coupon today to get your FREE copy of NTE's new Relays and Accessories catalog today!

For the name of your nearest NTE distributor, **call NTE toll-free 1-800-631-1250** (including Canada).
Tel. (201) 748-5089.
FAX (201) 748-6224.

NTE
NTE ELECTRONICS, INC.
A WORLDWIDE REPUTATION FOR QUALITY, SERVICE AND VALUE

☑ YES, PLEASE SEND ME THE *NEW* NTE RELAYS AND ACCESSORIES CATALOG. Please rush me _____ **FREE** copies.

Name _____
Company _____
Address _____
City _____
State _____ Zip _____
Type of product(s), you specify _____

Attach this coupon on your letterhead and mail to:
NTE Electronics, Inc.
Bloomfield, NJ 07003

USE BUSINESS REPLY CARD ON OPPOSITE PAGE

NTE'S OTHER PRODUCT LINES

NTE RELAYS

- Electromechanical
- Solid State
- I/O Modules
- Sockets and Accessories

NTE CAPACITORS

- Electrolytic
- Ceramic Disc
- Tantalum
- Motor Start/Run
- Ceiling Fan

NTE RESISTORS

- Metal Flameproof 1/8 to 3 Watt
- Power Wirewound 5W/10W/25W
- Fusible Metal Oxide

To order catalogs for any of these items use the order card inside the back cover.

NTE®

NTE ELECTRONICS, INC.

A WORLDWIDE REPUTATION FOR QUALITY, SERVICE AND VALUE

44 FARRAND ST.
BLOOMFIELD, N.J. 07003 U.S.A.

TOLL FREE 800-631-1250
(201) 748-5089 FAX (201) 748-6224

IN CANADA: TONY HAYWARD SALES, INC.
1845 SANDSTONE MANOR, UNIT 22
PICKERING, ONTARIO, L1W 3X9

(416) 839-6256 FAX (416) 839-5964

RECYCLABLE PAPER